S21MCC-P05MJG0-52CS

ODU MEDI-SNAP®

Straight push-pull plug for bend relief

Size: 1, IP50, Keying: C, Number of contacts: 5, Solder cup, Contact type: Pins, Signal



Basic information

Part number	S21MCC-P05MJG0-52CS
Category	Connector
Type of connector	Plug
Assembly situation	Straight
Size	1

Contact insert description

Transmission type	Signal
Number of contacts	5
Contact type	Pins
Contact diameter	0.9 mm
Termination type	Solder cup
Termination diameter	0.85 mm
Wire cross section AWG	AWG 22

Reverse gender on request

Technical information

Nominal current single contact	7.5 A	IEC 60512-5-2:2002 (DIN EN 60512-5-2:2003)
Max. current insert	5.625	VDE 0298-4:2003
Test voltage	1.05 kV AC	EIA-364-20F:2019-02
Max. creepage distance (contact to contact)	0.8 mm (Contact to housing)	
Max. clearance distance (contact to contact)	0.8 mm (Contact to contact)	

All shown connectors are rated to a safety extra low voltage (SELV) of less than 50 V AC / 75 V DC, according to IEC 61140:2016 (VDE 0140-1:2016) Protection against electric shock - Common aspects for installation and equipment. In case other standards rule a specific use of the connector, the application specific safety criteria shall be considered first. In this context, lower voltage ratings may be valid. Warning: Danger to life for operating voltages above 50 V AC / 120 V DC!

Cable description

Cable outlet	Cable bend relief
Min. cable diameter	4
Max. cable diameter	5.2

Mechanical and environmental data

Locking principle	Push-Pull
Keying	C
Mating cycles	2000
IP class	IP50
Max. operating temperature	120 °C
Min. operating temperature	50 °C

*mated & unmated condition

Material and surface treatments

Material	Cu-alloy with matt chrome finish
Insulator material	PEEK
Contact material	Cu-alloy with gold finish
Color option (Front or back nut)	Chrome finish

ODU reserves the right to make changes based on the current state of knowledge without prior notice without being obliged to provide replacement deliveries or refinements of older designs.
All shown connectors are defined without breaking capacity (COC) according to IEC 61984:2008 (VDE 0627:2009).

Graphics and technical drawings

DIMENSIONS

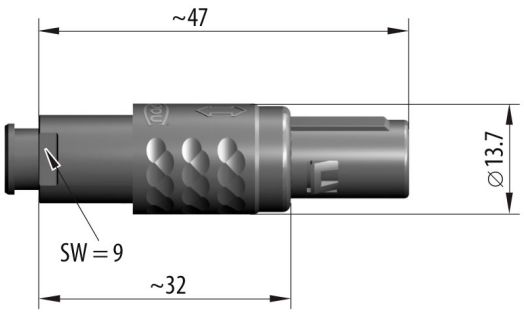

CODING: 60 °

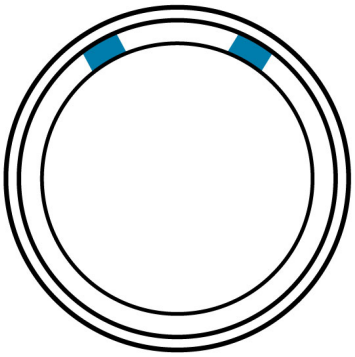

POSITIONS: 5 Positions

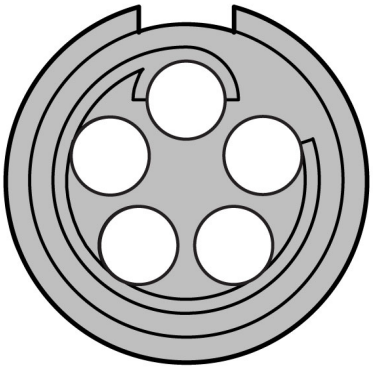

Further technical information and downloads

3D-File (STP File)

Assembly Instruction