4-Kbit I²C Serial EEPROM, Industrial Grade

AT24C04D

Product Page Links

Features

- Low-Voltage Operation:
  - V_{CC} = 1.7V to 3.6V
- Internally Organized as 512 x 8 (4K)
- Industrial Temperature Range: -40°C to +85°C
- I²C-Compatible (Two-Wire) Serial Interface:
  - 100 kHz Standard Mode, 1.7V to 3.6V
  - 400 kHz Fast Mode, 1.7V to 3.6V
  - 1 MHz Fast Mode Plus (FM+), 2.5V to 3.6V
- Schmitt Triggers, Filtered Inputs for Noise Suppression
- Bidirectional Data Transfer Protocol
- Write-Protect Pin for Full Array Hardware Data Protection
- Ultra Low Active Current (1 mA maximum) and Standby Current (0.8 µA maximum)
- 16-Byte Page Write Mode:
  - Partial page writes allowed
- Random and Sequential Read Modes
- Self-Timed Write Cycle within 5 ms Maximum
- ESD Protection > 4,000V
- High Reliability:
  - Endurance: 1,000,000 write cycles
  - Data retention: 100 years
- RoHS Compliant
- Die Sale Options: Wafer Form and Tape and Reel Available

Packages

- 8-Lead PDIP, 8-Lead SOIC, 5-Lead SOT-23, 8-Lead TSSOP and 8-Pad UDFN

© 2018-2026 Microchip Technology Inc. and its subsidiaries

Table of Contents

Features ... 1

Packages ... 1

1. Package Types (not to scale) ... 4

2. Pin Descriptions ... 5
   - 2.1. Device Address Inputs (A1, A2) ... 5
   - 2.2. Ground ... 5
   - 2.3. Serial Data (SDA) ... 5
   - 2.4. Serial Clock (SCL) ... 5
   - 2.5. Write-Protect (WP) ... 5
   - 2.6. Device Power Supply ... 6

3. Description ... 7
   - 3.1. System Configuration Using Two-Wire Serial EEPROMs ... 7
   - 3.2. Block Diagram ... 8

4. Electrical Characteristics ... 9
   - 4.1. Absolute Maximum Ratings ... 9
   - 4.2. DC and AC Operating Range ... 9
   - 4.3. DC Characteristics ... 9
   - 4.4. AC Characteristics ... 10
   - 4.5. Electrical Specifications ... 11

5. Device Operation and Communication ... 13
   - 5.1. Clock and Data Transition Requirements ... 13
   - 5.2. Start and Stop Conditions ... 13
   - 5.3. Acknowledge and No-Acknowledge ... 14
   - 5.4. Standby Mode ... 14
   - 5.5. Software Reset ... 15

6. Memory Organization ... 16
   - 6.1. Device Addressing ... 16

7. Write Operations ... 17
   - 7.1. Byte Write ... 17
   - 7.2. Page Write ... 17
   - 7.3. Acknowledge Polling ... 18
   - 7.4. Write Cycle Timing ... 18
   - 7.5. Write Protection ... 19

8. Read Operations ... 20
   - 8.1. Current Address Read ... 20
   - 8.2. Random Read ... 20
   - 8.3. Sequential Read ... 21

9. Device Default Condition from Microchip ... 22

10. Packaging Information ... 23

© 2018-2026 Microchip Technology Inc. and its subsidiaries

10.1. Package Marking Information 23
11. Revision History 38
12. Product Identification System 39
Microchip Information 40
Trademarks 40
Legal Notice 40
Microchip Devices Code Protection Feature 40
Product Page Links 41

© 2018-2026 Microchip Technology Inc. and its subsidiaries

1. Package Types (not to scale)

8-Lead PDIP/SOIC/TSSOP
(Top View)

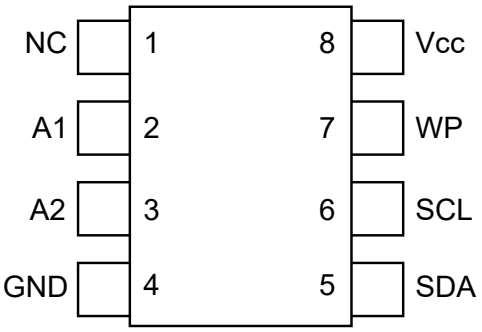

5-Lead SOT-23[1]
(Top View)

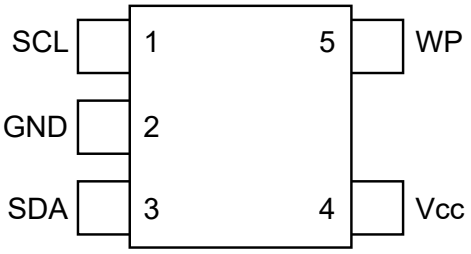

8-Pad UDFN
(Top View)

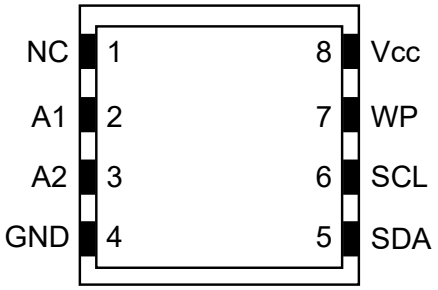

Note:

1. Refer to Device Addressing for details about addressing the SOT-23 version of the device.

© 2018-2026 Microchip Technology Inc. and its subsidiaries

2. Pin Descriptions

The descriptions of the pins are listed in Table 2-1.

Table 2-1. Pin Function Table

Name	8-Lead PDIP	8-Lead SOIC	8-Lead TSSOP	5-Lead SOT-23	8-Pad UDFN(1)	Function
NC	1	1	1	—	1	No Connect
A1(2)	2	2	2	—	2	Device Address Input
A2(2)	3	3	3	—	3	Device Address Input
GND	4	4	4	2	4	Ground
SDA	5	5	5	3	5	Serial Data
SCL	6	6	6	1	6	Serial Clock
WP(2)	7	7	7	5	7	Write-Protect
V_{CC}	8	8	8	4	8	Device Power Supply

Notes:

1. The exposed pad on this package can be connected to GND or left floating.
2. If the A2, A1 or WP pins are not driven, they are internally pulled down to GND. In order to operate in a wide variety of application environments, the pull-down mechanism is intentionally designed to be somewhat strong. Once these pins are biased above the CMOS input buffer's trip point (~0.5 x V_{CC}), the pull-down mechanism disengages. Microchip recommends connecting these pins to a known state whenever possible.

2.1. Device Address Inputs (A1, A2)

The A1 and A2 pins are device address inputs that are hardwired (directly to GND or to V_{CC}) for compatibility with other two-wire Serial EEPROM devices. When the pins are hardwired, as many as four devices may be addressed on a single bus system. A device is selected when a corresponding hardware and software match is true. If these pins are left floating, the A1 and A2 pins will be internally pulled down to GND. However, due to capacitive coupling that may appear in customer applications, Microchip recommends always connecting the address pins to a known state. When using a pull-up resistor, Microchip recommends using 10 kΩ or less.

2.2. Ground

The ground reference for the power supply. GND should be connected to the system ground.

2.3. Serial Data (SDA)

The SDA pin is an open-drain bidirectional input/output pin used to serially transfer data to and from the device. The SDA pin must be pulled high using an external pull-up resistor (not to exceed 10 kΩ in value) and may be wire-ORed with any number of other open-drain or open-collector pins from other devices on the same bus.

2.4. Serial Clock (SCL)

The SCL pin is used to provide a clock to the device and to control the flow of data to and from the device. Command and input data present on the SDA pin are always latched in on the rising edge of SCL, while output data on the SDA pin are clocked out on the falling edge of SCL. The SCL pin must either be forced high when the serial bus is idle or pulled high using an external pull-up resistor.

2.5. Write-Protect (WP)

When the write-protect (WP) input is connected to GND, normal write operations are enabled. When the WP pin is connected directly to V_{CC}, all write operations to the protected memory area are disabled.

If the WP pin is left floating, it is internally pulled down to GND. However, because capacitive coupling may occur in customer applications, Microchip recommends connecting the WP pin to

© 2018-2026 Microchip Technology Inc. and its subsidiaries

a defined logic level at all times. When a pull-up resistor is used, a value of 10 kΩ or less is recommended.

Table 2-2. Write-Protect

WP Pin Status	Protected Memory Area
At V_{CC}	Full Array
At GND	Normal Write Operations

2.6. Device Power Supply

The V_{CC} pin is used to supply the source voltage to the device. Operations at invalid V_{CC} voltages may produce spurious results and should not be attempted.

© 2018-2026 Microchip Technology Inc. and its subsidiaries

3. Description

The AT24C04D provides 4,096 bits of Serial Electrically Erasable Programmable Read-Only Memory (EEPROM) organized as 512 words of 8 bits each. The device's cascading feature allows up to four devices to share a common Two-Wire bus. This device is optimized for use in many industrial and commercial applications where low-power and low-voltage operations are essential. The device is available in space-saving 8-Lead PDIP, 8-Lead SOIC, 5-Lead SOT-23, 8-Lead TSSOP and 8-Pad UDFN packages. All packages operate from 1.7V to 3.6V.

3.1. System Configuration Using Two-Wire Serial EEPROMs

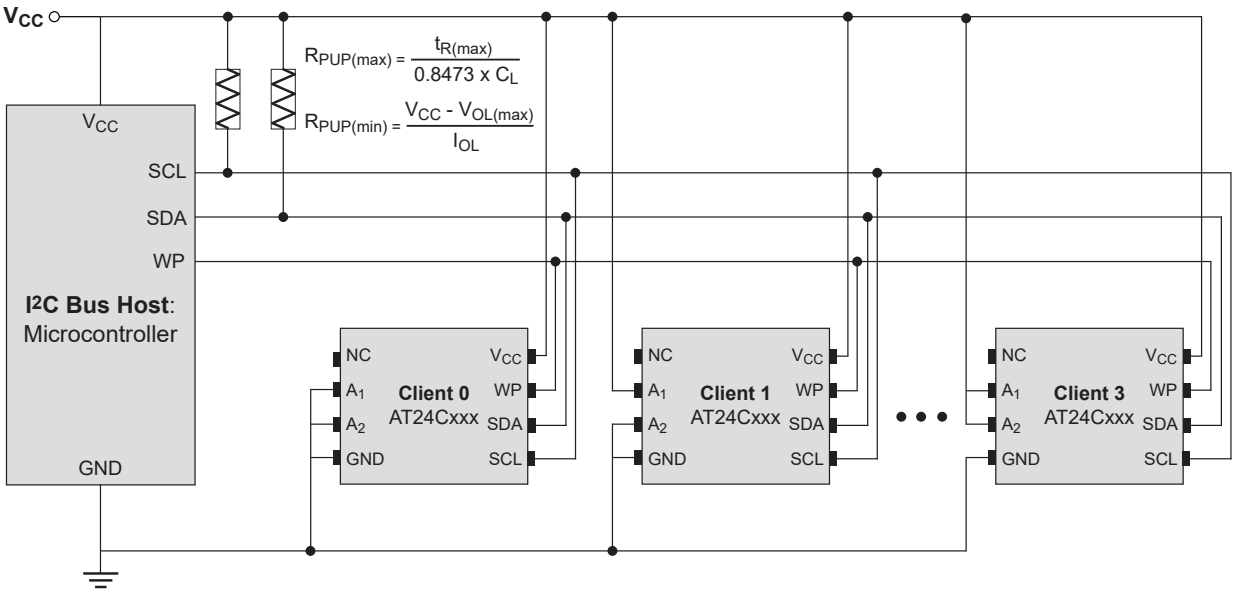

© 2018-2026 Microchip Technology Inc. and its subsidiaries

3.2. Block Diagram

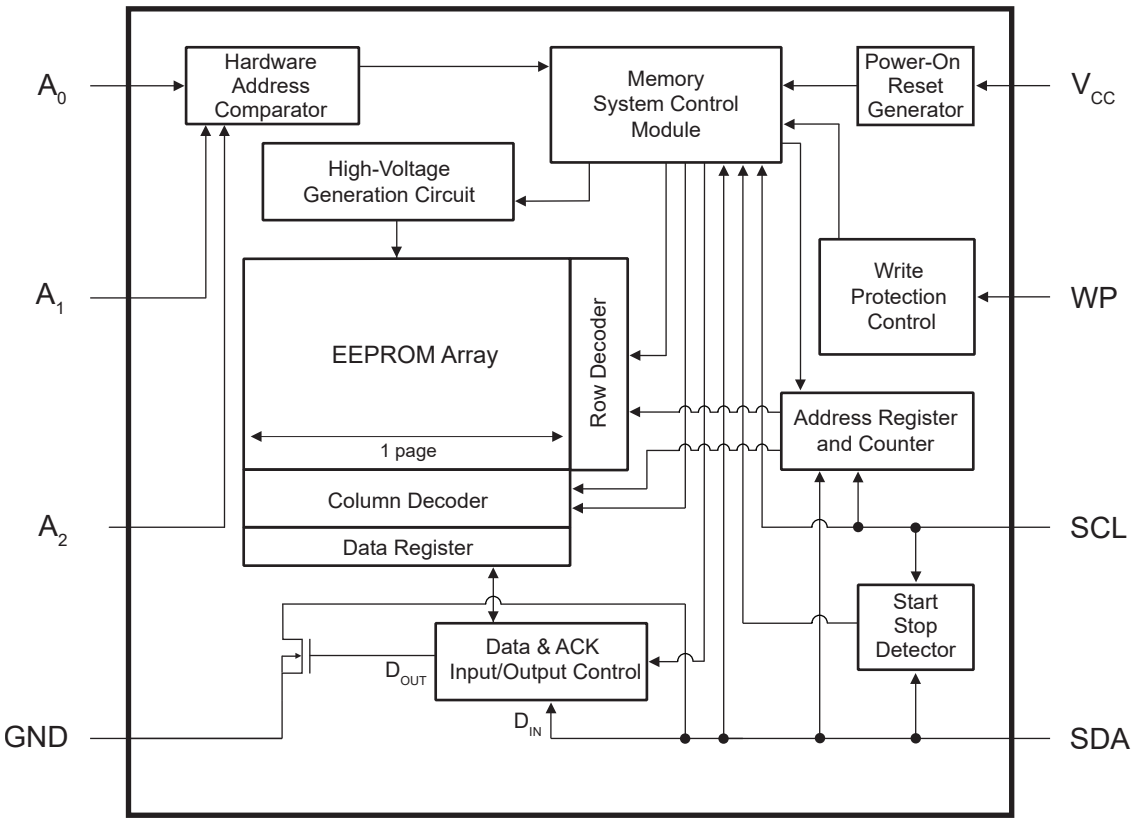

© 2018-2026 Microchip Technology Inc. and its subsidiaries

4. Electrical Characteristics

4.1. Absolute Maximum Ratings

Temperature under bias	-55°C to +125°C
Storage temperature	-65°C to +150°C
V_{CC}	4.1V
Voltage on any pin with respect to ground	-0.6V to +4.1V
DC output current	5.0 mA
ESD protection	4 kV

Note: Stresses above those listed under "Absolute Maximum Ratings" may cause permanent damage to the device. This is a stress rating only, and functional operation of the device at these or any other conditions above those indicated in the operation listings of this specification is not implied. Exposure to absolute maximum rating conditions for extended periods may affect device reliability.

4.2. DC and AC Operating Range

Table 4-1. DC and AC Operating Range

AT24C04D		
Operating Temperature (Case)	Industrial Temperature Range	-40°C to +85°C
V_{CC} Power Supply	Low-Voltage Grade	1.7V to 3.6V

4.3. DC Characteristics

Table 4-2. DC Characteristics

Parameter	Sym.	Min.	Typ.(1)	Max.	Units	Test Conditions
Supply Voltage	V_{CC}	1.7	—	3.6	V	
Supply Current	I_{CC1}	—	0.08	0.3	mA	V_{CC} = 1.8V(2), Read at 400 kHz
		—	0.15	0.5	mA	V_{CC} = 3.6V, Read at 1 MHz
Supply Current	I_{CC2}	—	0.20	1.0	mA	V_{CC} = 3.6V, Write at 1 MHz
Standby Current	I_{SB}	—	0.08	0.4	µA	V_{CC} = 1.8V(2), V_{IN} = V_{CC} or GND
		—	0.10	0.8	µA	V_{CC} = 3.6V, V_{IN} = V_{CC} or GND
Input Leakage Current	I_{LI}	—	0.10	3.0	µA	V_{IN} = V_{CC} or GND
Output Leakage Current	I_{LO}	—	0.05	3.0	µA	V_{OUT} = V_{CC} or GND
Input Low Level	V_{IL}	-0.6	—	V_{CC} x 0.3	V	Note 2
Input High Level	V_{IH}	V_{CC} x 0.7	—	V_{CC} + 0.5	V	Note 2
Output Low Level	V_{OL1}	—	—	0.2	V	V_{CC} = 1.8V, I_{OL} = 0.15 mA
Output Low Level	V_{OL2}	—	—	0.4	V	V_{CC} = 3.0V, I_{OL} = 2.1 mA

Note:

1. Typical values characterized at T_A = +25°C unless otherwise noted.
2. This parameter is characterized but is not 100% tested in production.

© 2018-2026 Microchip Technology Inc. and its subsidiaries

4.4. AC Characteristics

Table 4-3. AC Characteristics[1]

Parameter	Symbol	Standard Mode		Fast Mode		Fast Mode Plus		Units
		V_{CC} = 1.7V to 3.6V		V_{CC} = 1.7V to 3.6V		V_{CC} = 2.5V to 3.6V		
		Min.	Max.	Min.	Max.	Min.	Max.	
Clock Frequency, SCL	f_{SCL}	—	100	—	400	—	1000	kHz
Clock Pulse Width Low	t_{LOW}	4,700	—	1,300	—	500	—	ns
Clock Pulse Width High	t_{HIGH}	4,000	—	600	—	400	—	ns
Input Filter Spike Suppression (SCL,SDA)[2]	t_I	—	100	—	100	—	100	ns
Clock Low to Data Out Valid	t_{AA}	—	4,500	—	900	—	450	ns
Bus Free Time between Stop and Start[2]	t_{BUF}	4,700	—	1,300	—	500	—	ns
Start Hold Time	$t_{HD.STA}$	4,000	—	600	—	250	—	ns
Start Setup Time	$t_{SU.STA}$	4,700	—	600	—	250	—	ns
Data In Hold Time	$t_{HD.DAT}$	0	—	0	—	0	—	ns
Data In Setup Time	$t_{SU.DAT}$	200	—	100	—	100	—	ns
Inputs Rise Time[2]	t_R	—	1,000	—	300	—	100	ns
Inputs Fall Time[2]	t_F	—	300	—	300	—	100	ns
Stop Setup Time	$t_{SU.STO}$	4,700	—	600	—	250	—	ns
Write-Protect Setup Time	$t_{SU.WP}$	4,000	—	600	—	100	—	ns
Write-Protect Hold Time	$t_{HD.WP}$	4,000	—	600	—	400	—	ns
Data Out Hold Time	t_{DH}	100	—	50	—	50	—	ns
Write Cycle Time	t_{WR}	—	5	—	5	—	5	ms

Notes:

1. AC measurement conditions:
   - C_L: 100 pF
   - R_{PUP} (SDA bus line pull-up resistor to V_{CC}): 1.3 kΩ (1000 kHz), 4 kΩ (400 kHz), 10 kΩ (100 kHz)
   - Input pulse voltages: 0.3 x V_{CC} to 0.7 x V_{CC}
   - Input rise and fall times: ≤50 ns
   - Input and output timing reference voltages: 0.5 x V_{CC}
2. These parameters are determined through product characterization and are not 100% tested in production.

© 2018-2026 Microchip Technology Inc. and its subsidiaries

Figure 4-1. Bus Timing

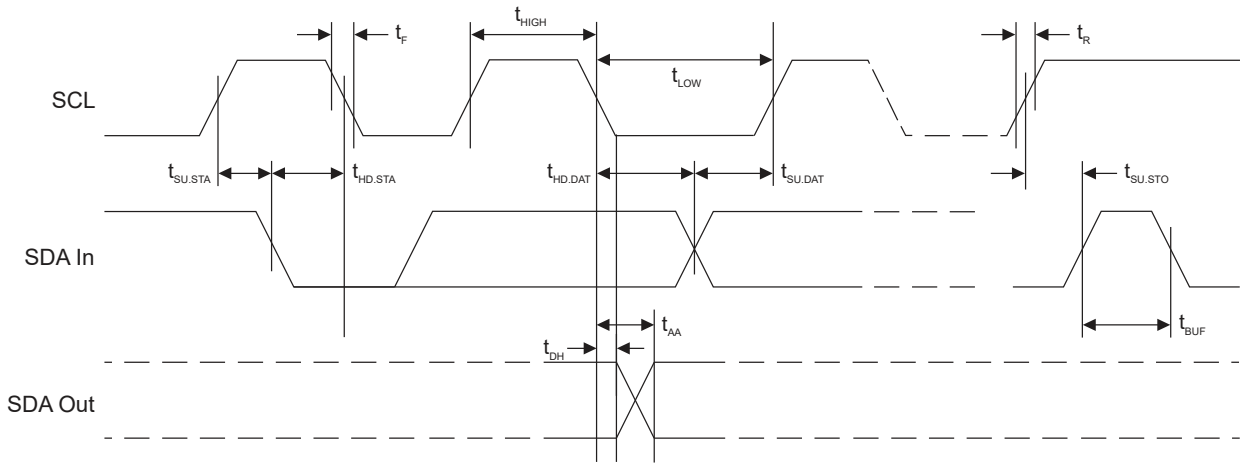

4.5. Electrical Specifications

4.5.1. Power-Up Requirements and Reset Behavior

During a power-up sequence, the V_{CC} supplied to the AT24C04D should monotonically rise from GND to the minimum V_{CC} level (as specified in Table 4-1), with a slew rate no faster than 0.1 V/µs.

4.5.1.1. Device Reset

To prevent inadvertent write operations or any other spurious events from occurring during a power-up sequence, the AT24C04D includes a Power-On Reset (POR) circuit. Upon power-up, the device will not respond to any commands until the V_{CC} level crosses the internal voltage threshold (V_{POR}) that brings the device out of Reset and into Standby mode.

The system designer must ensure the instructions are not sent to the device until the V_{CC} supply has reached a stable value greater than or equal to the minimum V_{CC} level. Additionally, once the V_{CC} is greater than or equal to the minimum V_{CC} level, the bus host must wait at least t_{PUP} before sending the first command to the device. See Table 4-4 for the values associated with these power-up parameters.

Table 4-4. Power-Up Conditions[1]

Symbol	Parameter	Min.	Max.	Units
t_{PUP}	Time required after V_{CC} is stable before the device can accept commands	100	—	µs
V_{POR}	Power-On Reset Threshold Voltage	—	1.5	V
t_{POFF}	Minimum time at V_{CC} = 0V between power cycles	1	—	ms

Note:

1. These parameters are characterized but they are not 100% tested in production.

If an event occurs in the system where the V_{CC} level supplied to the AT24C04D drops below the maximum V_{POR} level specified, it is recommended that a full power cycle sequence be performed by first driving the V_{CC} pin to GND, waiting at least the minimum t_{POFF} time and then performing a new power-up sequence in compliance with the requirements defined in this section.

© 2018-2026 Microchip Technology Inc. and its subsidiaries

4.5.2. Pin Capacitance

Table 4-5. Pin Capacitance[1]

Symbol	Test Condition	Max.	Units	Conditions
$C_{I/O}$	Input/Output Capacitance (SDA)	8	pF	$V_{I/O}$ = 0V
C_{IN}	Input Capacitance (A1, A2 and SCL)	6	pF	V_{IN} = 0V

Note:

1. This parameter is characterized but is not 100% tested in production.

4.5.3. EEPROM Cell Performance Characteristics

Table 4-6. EEPROM Cell Performance Characteristics

Operation	Test Condition	Min.	Max.	Units
Write Endurance[1]	T_A = +25°C, V_{CC} (min.) < V_{CC} < V_{CC} (max.) Byte or Page Write mode	1,000,000	—	Write Cycles
Data Retention[1]	T_A = +55°C	100	—	Years

Note:

1. Performance is determined through characterization and the qualification process.

© 2018-2026 Microchip Technology Inc. and its subsidiaries

5. Device Operation and Communication

The AT24C04D operates as a client device and utilizes a simple I^2C-compatible Two-Wire digital serial interface to communicate with a host controller, commonly referred to as the bus host. The host initiates and controls all read and write operations to the client devices on the serial bus, and both the host and the client devices can transmit and receive data on the bus.

The serial interface consists of two signal lines: Serial Clock (SCL) and Serial Data (SDA).
The SCL pin is used to receive the clock signal from the host, while the bidirectional SDA pin is used to receive command and data information from the host as well as to send data back to the host. Data are always latched into the AT24C04D on the rising edge of SCL and always output from the device on the falling edge of SCL. Both the SCL and SDA pins incorporate integrated spike suppression filters and Schmitt Triggers to minimize the effects of input spikes and bus noise.

All command and data information is transferred with the Most Significant bit (MSb) first. During bus communication, one data bit is transmitted every clock cycle, and after eight bits (one byte) of data have been transferred, the receiving device must respond with either an Acknowledge (ACK) or a No-Acknowledge (NACK) response bit during a ninth clock cycle (ACK/NACK clock cycle) generated by the host. Therefore, nine clock cycles are required for every one byte of data transferred. There are no unused clock cycles during any read or write operation; thus, there must not be any interruptions or breaks in the data stream during each data byte transfer and ACK or NACK clock cycle.

During data transfers, data on the SDA pin must change only while SCL is low, and the data must remain stable while SCL is high. If data on the SDA pin changes while SCL is high, then either a Start or a Stop condition will occur. Start and Stop conditions are used to initiate and terminate all serial bus communication between the host and the client devices. The number of data bytes transferred between a Start and a Stop condition is not limited and is determined by the host. For the serial bus to be idle, both the SCL and SDA pins must be in the logic high state simultaneously.

5.1. Clock and Data Transition Requirements

The SDA pin is an open-drain terminal and therefore must be pulled high with an external pull-up resistor. SCL is an input pin that can either be driven high or pulled high using an external pull-up resistor. Data on the SDA pin may change only during SCL low time periods. Data changes during SCL high periods indicate a Start or Stop condition as defined below. The relationship of the AC timing parameters with respect to SCL and SDA for the AT24C04D is shown in the timing waveform in Figure 4-1. The AC timing characteristics and specifications are outlined in AC Characteristics.

5.2. Start and Stop Conditions

5.2.1. Start Condition

A Start condition occurs when there is a high-to-low transition on the SDA pin while the SCL pin is at a stable logic '1' state and will bring the device out of Standby mode. The host uses a Start condition to initiate any data transfer sequence; therefore, every command must begin with a Start condition. The device will continuously monitor the SDA and SCL pins for a Start condition but will not respond unless one is detected. Refer to Figure 5-1 for more details.

5.2.2. Stop Condition

A Stop condition occurs when there is a low-to-high transition on the SDA pin while the SCL pin is stable in the logic '1' state.

The host can use the Stop condition to end a data transfer sequence with the AT24C04D, which will subsequently return to Standby mode. The host can also utilize a repeated Start condition instead of a Stop condition to end the current data transfer if the host will perform another operation. Refer to Figure 5-1 for more details.

© 2018-2026 Microchip Technology Inc. and its subsidiaries

5.3. Acknowledge and No-Acknowledge

After every byte of data is received, the receiving device must confirm to the transmitting device that it has successfully received the data byte by responding with what is known as an Acknowledge (ACK). An ACK is accomplished by the transmitting device first releasing the SDA line at the falling edge of the eighth clock cycle, followed by the receiving device responding with a logic '0' during the entire high period of the ninth clock cycle.

When the AT24C04D is transmitting data to the host, the host can indicate that it is done receiving data and wants to end the operation by sending a logic '1' response to the AT24C04D instead of an ACK response during the ninth clock cycle. This is known as a No-Acknowledge (NACK) and is accomplished by the host sending a logic '1' during the ninth clock cycle, at which point the AT24C04D will release the SDA line so the host can then generate a Stop condition.

The transmitting device, which can be the bus host or the Serial EEPROM, must release the SDA line at the falling edge of the eighth clock cycle to allow the receiving device to drive the SDA line to a logic '0' to ACK the previous 8-bit word. The receiving device must release the SDA line at the end of the ninth clock cycle to allow the transmitter to continue sending new data. A timing diagram has been provided in Figure 5-1 to better illustrate these requirements.

Figure 5-1. Start Condition, Data Transitions, Stop Condition and Acknowledge

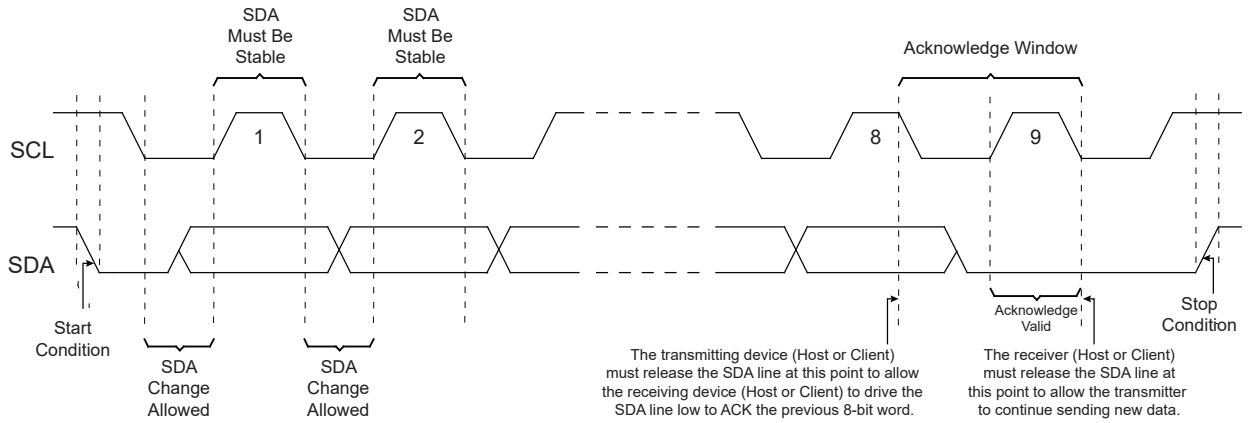

5.4. Standby Mode

The AT24C04D features a low-power Standby mode that is enabled when any one of the following occurs:

- A valid power-up sequence is performed (see Power-Up Requirements and Reset Behavior).
- A Stop condition at the end of a valid I²C transaction is received by the device unless it initiates an internal write cycle (see Write Operations).
- At the completion of an internal write cycle (see Write Operations).
- An unsuccessful match of the device type identifier or hardware address in the device address byte occurs (see Device Addressing).
- The bus host does not ACK the receipt of data read out from the device; instead, it sends a NACK response (see Read Operations).

© 2018-2026 Microchip Technology Inc. and its subsidiaries

5.5. Software Reset

After an interruption in protocol, power loss or system Reset, any Two-Wire device can be protocol reset by clocking SCL until SDA is released by the EEPROM and goes high. The number of clock cycles until SDA is released by the EEPROM will vary. The software Reset sequence should not take more than nine dummy clock cycles. Once the software Reset sequence is complete, a new protocol can be sent to the device by sending a Start condition followed by the protocol. Refer to Figure 5-2 for an illustration.

Figure 5-2. Software Reset

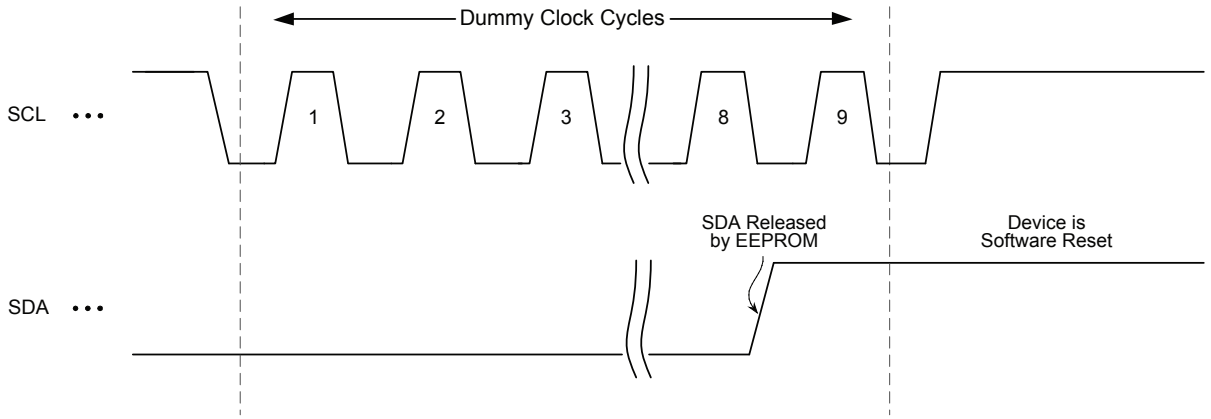

In the event that the device is still non-responsive or remains active on the SDA bus, a power cycle must be used to reset the device (see Power-Up Requirements and Reset Behavior).

© 2018-2026 Microchip Technology Inc. and its subsidiaries

6. Memory Organization

The AT24C04D is internally organized as 32 pages of 16 bytes each.

6.1. Device Addressing

Accessing the device requires an 8-bit device address byte following a Start condition to enable the device for a read or write operation. Since multiple client devices can reside on the serial bus, each client device must have its own unique address so the host can access each device independently.

The Most Significant four bits of the device address byte are referred to as the device type identifier. The device type identifier '1010' (Ah) is required in bits 7 through 4 of the device address byte (see Table 6-1).

Following the 4-bit device type identifier are the hardware client address bits, A2 and A1. These bits can be used to expand the address space by allowing up to four Serial EEPROM devices on the same bus. The A2 and A1 values must correlate with the voltage level on the corresponding hardwired device address input pins A2 and A1. The A2 and A1 pins use an internal proprietary circuit that automatically biases them to a logic '0' state if the pin is allowed to float. In order to operate in a wide variety of application environments, the pull-down mechanism is intentionally designed to be somewhat strong. Once these pins are biased above the CMOS input buffer's trip point (~0.5 x V_{CC}), the pull-down mechanism disengages. Microchip recommends connecting the A2 and A1 pins to a known state whenever possible.

When using the SOT-23 package, the A2 and A1 pins are not accessible and are left floating. The previously mentioned automatic pull-down circuit will set these pins to a logic '0' state. As a result, to properly communicate with the device in the SOT-23 package, the A2 and A1 software bits must always be set to logic '0' for any operation.

Following the A2 and A1 hardware client address bits is bit A8 (bit 1 of the device address byte), which is the Most Significant bit of the memory array word address. Refer to Table 6-1 to review the bit position.

The eighth bit (bit 0) of the device address byte is the Read/Write Select bit. A read operation is initiated if this bit is high and a write operation is initiated if this bit is low.

Upon the successful comparison of the device address byte, the AT24C04D will return an ACK. If a valid comparison is not made, the device will NACK.

Table 6-1. Device Address Byte

Package	Device Type Identifier				Hardware Client Address Bits		Most Significant Bit of the Word Address	R/$\overline{W}$ Select
	Bit 7	Bit 6	Bit 5	Bit 4	Bit 3	Bit 2	Bit 1	Bit 0
SOIC, TSSOP, UDFN, PDIP	1	0	1	0	A2	A1	A8	R/$\overline{W}$
SOT-23	1	0	1	0	0	0	A8	R/$\overline{W}$

For all operations except the current address read, a word address byte must be transmitted to the device immediately following the device address byte. The word address byte consists of the remaining eight bits of the 9-bit memory array word address and is used to specify which byte location in the EEPROM to start reading or writing. Refer to Table 6-2 to review these bit positions.

Table 6-2. Word Address Byte

Bit 7	Bit 6	Bit 5	Bit 4	Bit 3	Bit 2	Bit 1	Bit 0
A7	A6	A5	A4	A3	A2	A1	A0

© 2018-2026 Microchip Technology Inc. and its subsidiaries

7. Write Operations

All write operations for the AT24C04D begin with the host sending a Start condition, followed by a device address byte with the R/$\overline{W}$ bit set to logic '0', and then by the word address byte. The data value(s) to be written to the device immediately follow the word address byte.

7.1. Byte Write

The AT24C04D supports the writing of a single 8-bit byte. Selecting a data word in the AT24C04D requires a 9-bit word address.

Upon receipt of the proper device address and word address bytes, the EEPROM will send an Acknowledge. The device will then be ready to receive the 8-bit data word. After receiving the 8-bit data word, the EEPROM will respond with an ACK. The addressing device, such as a bus host, must then terminate the write operation with a Stop condition. At this point, the EEPROM will enter an internally self-timed write cycle, which will be completed within t_{WR}, while the data word is being programmed into the nonvolatile EEPROM. All inputs are disabled during this write cycle, and the EEPROM will not respond until the write is complete.

Figure 7-1. Byte Write

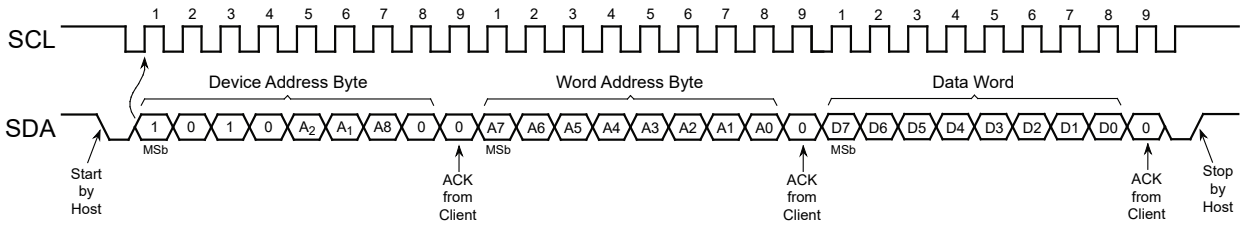

7.2. Page Write

A page write operation allows up to 16 bytes to be written in a single write cycle, provided that all bytes are in the same row of the memory array (where address bits A8 through A4 are identical). Partial page writes of fewer than 16 bytes are also allowed.

A page write is initiated the same way as a byte write, but the bus host does not send a Stop condition after the first data word is clocked in. Instead, after the EEPROM acknowledges receipt of the first data word, the bus host can transmit up to fifteen additional data words. The EEPROM will respond with an ACK after each data word is received. Once all data to be written have been sent to the device, the bus host must issue a Stop condition (see Figure 7-2), at which point the internally self-timed write cycle will begin.

The lower four bits of the word address are internally incremented following the receipt of each data word. The higher-order address bits are not incremented and retain the memory page row location. Page write operations are limited to writing bytes within a single physical page, regardless of the number of bytes being written. When the incremented word address reaches the page boundary, the address counter will roll over to the beginning of the same page. Nevertheless, creating a rollover event should be avoided as previously loaded data in the page could become unintentionally altered.

© 2018-2026 Microchip Technology Inc. and its subsidiaries

Figure 7-2. Page Write

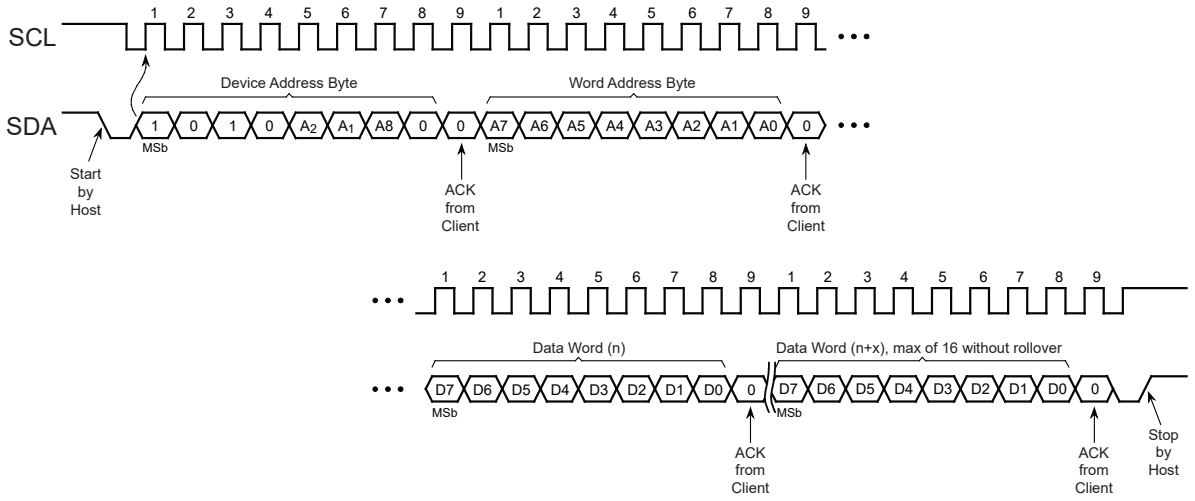

7.3. Acknowledge Polling

An Acknowledge Polling routine can be implemented to optimize time-sensitive applications that aim to avoid waiting for the fixed maximum write cycle time (t_{WR}). This method allows the application to promptly determine when the Serial EEPROM write cycle has completed so a subsequent operation can be started.

Once the internally self-timed write cycle has started, an Acknowledge Polling routine can be initiated. This involves repeatedly sending a Start condition followed by a valid device address byte with the R/$\overline{W}$ bit set to logic '0'. The device will not respond with an ACK while the write cycle is ongoing. Once the internal write cycle has completed, the EEPROM will respond with an ACK, allowing a new read or write operation to be immediately initiated. A flowchart has been included in Figure 7-3 to better illustrate this technique.

Figure 7-3. Acknowledge Polling Flowchart

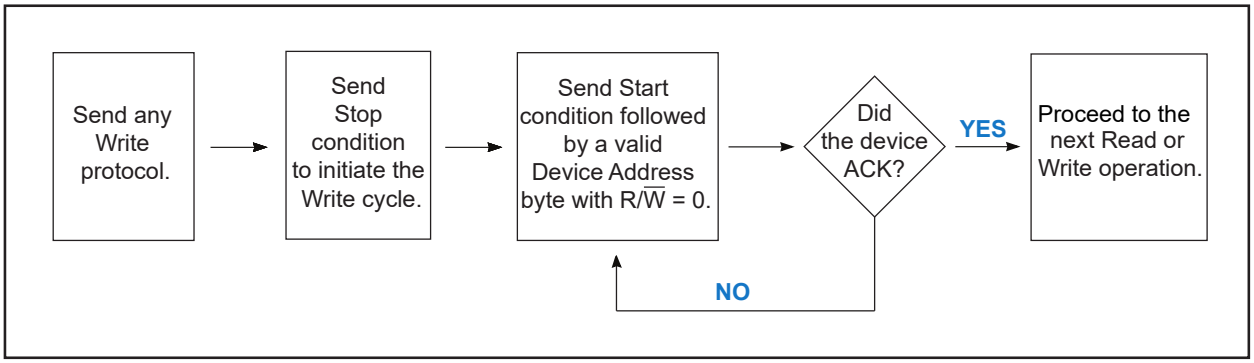

7.4. Write Cycle Timing

The length of the self-timed write cycle (t_{WR}) is defined as the amount of time from the Stop condition, which begins the internal write cycle, to the Start condition of the first device address byte sent to the AT24C04D, to which it subsequently responds with an ACK. Figure 7-4 shows this measurement. During the internally self-timed write cycle, any attempts to read from or write to the memory array will not be processed.

© 2018-2026 Microchip Technology Inc. and its subsidiaries

Figure 7-4. Write Cycle Timing

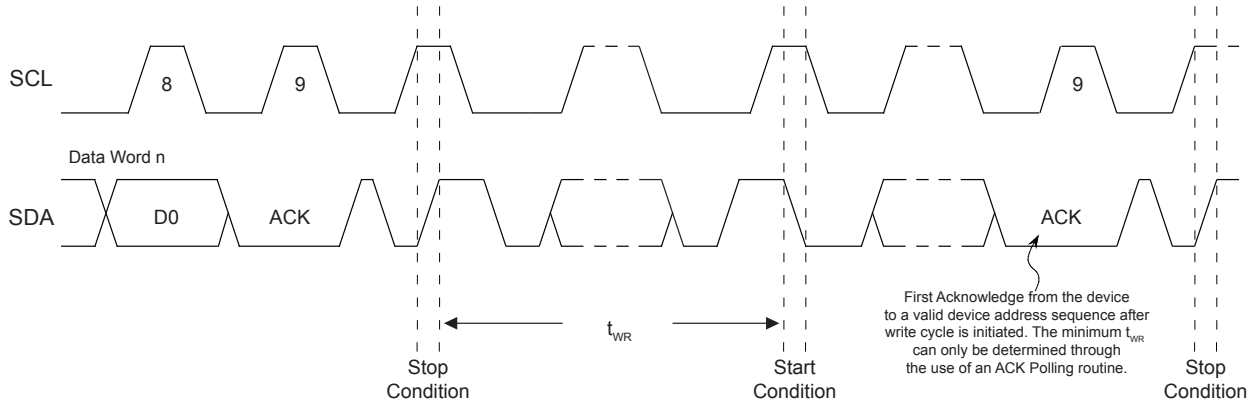

7.5. Write Protection

The AT24C04D utilizes a hardware data protection scheme that allows the user to write-protect the entire memory contents when the WP pin is at V_{CC} (or a valid V_{IH}). No write protection will be set if the WP pin is at GND or left floating.

Table 7-1. AT24C04D Write-Protect Behavior

WP Pin Voltage	Part of the Array Protected
V_{CC}	Full Array
GND	None (Write Protection Not Enabled)

The status of the WP pin is sampled at the Stop condition for every byte write or page write operation prior to the start of an internally self-timed write cycle. Changing the WP pin state after the Stop condition has been sent will not alter or interrupt the execution of the write cycle. The WP pin state must be valid with respect to the associated setup ($t_{SU.WP}$) and hold ($t_{HD.WP}$) timing as shown in Figure 7-5. The WP setup time is the amount of time that the WP state must be stable before the Stop condition is issued. The WP hold time is the duration for which the WP pin must remain stable after the Stop condition is issued.

If an attempt is made to write to the device while the WP pin has been asserted, the device will acknowledge the device address, word address and data bytes. However, no write cycle will occur when the Stop condition is issued. The device will immediately be ready to accept a new read or write command.

Figure 7-5. Write-Protect Setup and Hold Timing

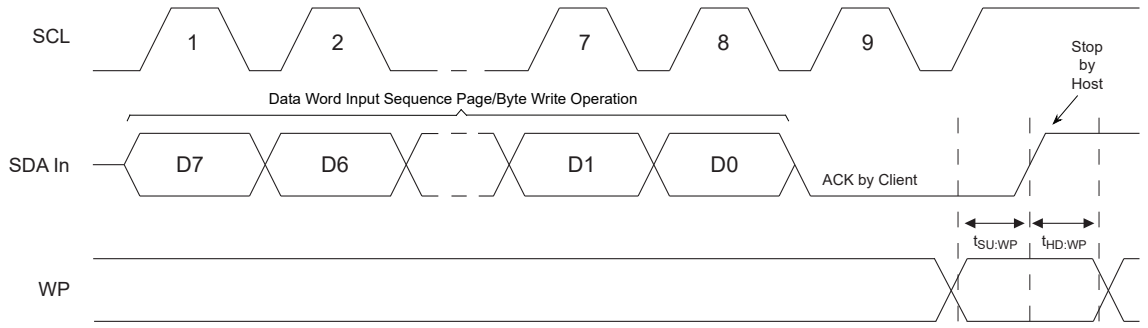

© 2018-2026 Microchip Technology Inc. and its subsidiaries

8. Read Operations

Read operations are initiated in the same way as write operations, with the exception that the Read/Write Select bit in the device address byte must be a logic '1'. There are three read operations:

- Current Address Read
- Random Read
- Sequential Read

8.1. Current Address Read

The internal data word address counter maintains the last address accessed during the last read or write operation, incremented by one. This address stays valid between operations as long as the V_{CC} is maintained to the part. The address rollover during a read is from the last byte of the last page to the first byte of the first page of the memory.

A current address read operation will output data according to the location of the internal data word address counter. This is initiated with a Start condition, followed by a valid device address byte with the R/$\overline{W}$ bit set to logic '1'. The device will ACK this sequence and the current address data word is serially clocked out on the SDA line. All types of read operations will be terminated if the bus host does not respond with an ACK (it NACKs) during the ninth clock cycle. After the NACK response, the host may send a Stop condition to complete the protocol, or it can send a Start condition to begin the next sequence.

Figure 8-1. Current Address Read

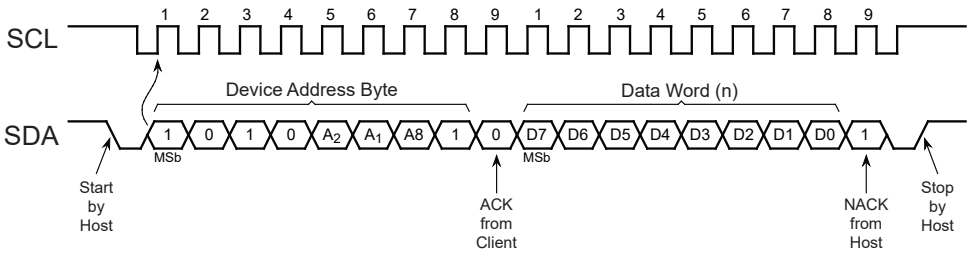

8.2. Random Read

A random read begins in the same way as a byte write operation does to load in a new data word address. This is known as a "dummy write" sequence; however, the data byte and the Stop condition of the byte write must be omitted to prevent the part from entering an internal write cycle. Once the device address and word address are clocked in and acknowledged by the EEPROM, the bus host must generate another Start condition. The bus host now initiates a current address read by sending a Start condition, followed by a valid device address byte with the R/$\overline{W}$ bit set to logic '1'. In this second device address byte, the bit position usually reserved for the Most Significant bit of the word address (bit 1) is a "don't care" bit since the address that will be read from is determined only by what was sent in the dummy write portion of the sequence. The EEPROM will ACK the device address and serially clock out the data word on the SDA line. All types of read operations will be terminated if the bus host does not respond with an ACK (it NACKs) during the ninth clock cycle. After the NACK response, the host may send a Stop condition to complete the protocol, or it can send a Start condition to begin the next sequence.

© 2018-2026 Microchip Technology Inc. and its subsidiaries

Figure 8-2. Random Read

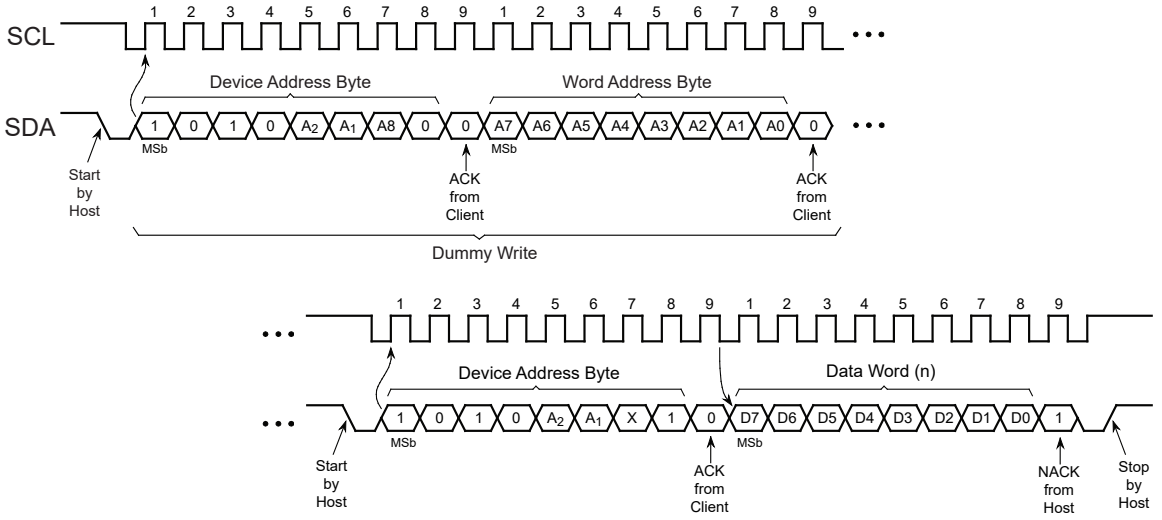

8.3. Sequential Read

Sequential reads are initiated by either a current address read or a random read. After the bus host receives a data word, it responds with an Acknowledge. As long as the EEPROM receives an ACK, it will continue to increment the word address and serially clock out sequential data words. When the maximum memory address is reached, the data word address will roll over and the sequential read will continue from the beginning of the memory array. All types of read operations will be terminated if the bus host does not respond with an ACK (it NACKs) during the ninth clock cycle. After the NACK response, the host may send a Stop condition to complete the protocol, or it can send a Start condition to begin the next sequence.

Figure 8-3. Sequential Read

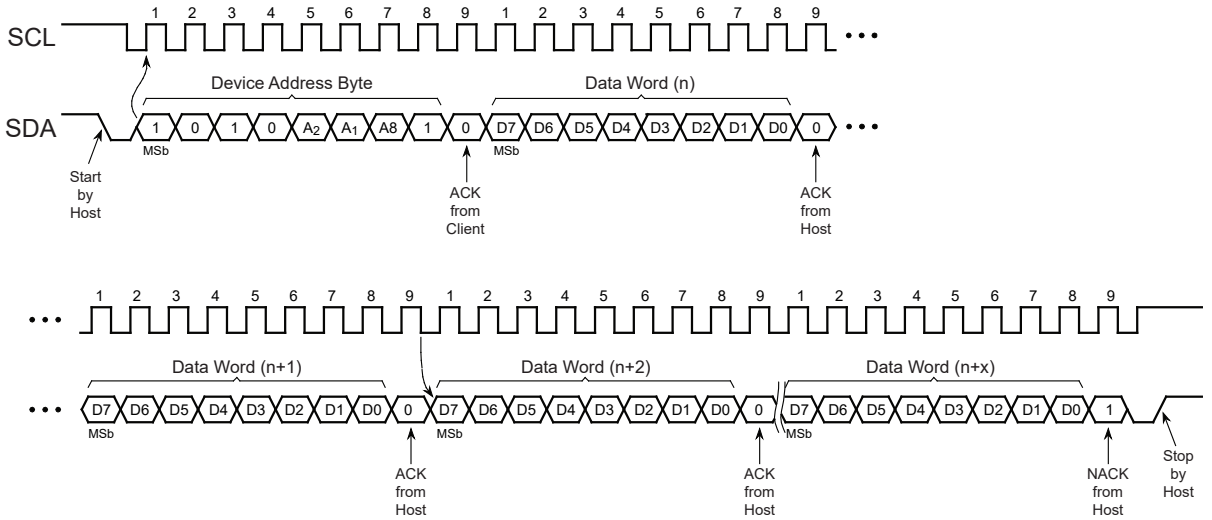

© 2018-2026 Microchip Technology Inc. and its subsidiaries

9. Device Default Condition from Microchip

The AT24C04D is delivered with the EEPROM array set to logic '1', resulting in FFh data in all locations.

© 2018-2026 Microchip Technology Inc. and its subsidiaries

10. Packaging Information

10.1. Package Marking Information

AT24C04D: Package Marking Information

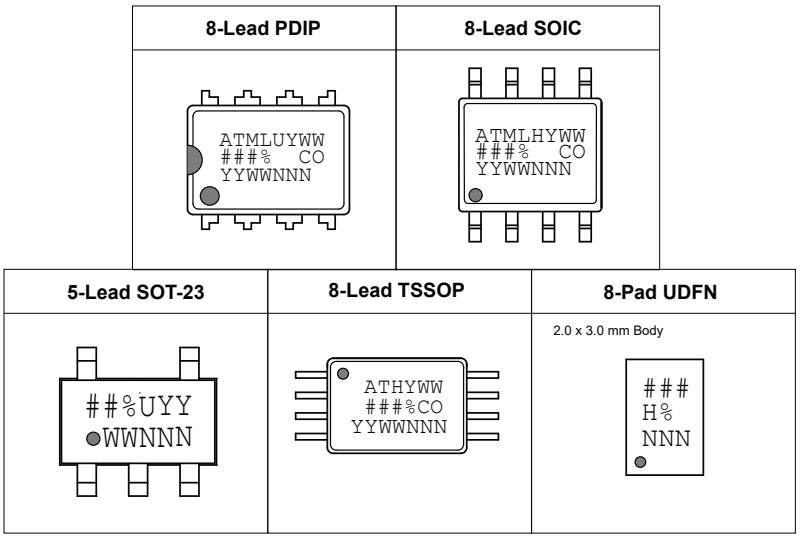

Note 1: ● designates pin 1
Note 2: Package drawings are not to scale
Note 3: For SOT-23 package with date codes before 7B, the bottom line (YMXX) is marked on the bottom side and there is no Country of Assembly (@) mark on the top line

Catalog Number Truncation	
AT24C04D	Truncation Code ###: 04D / ##: 4D

Date Codes	Voltages
Y = Year code (last digit of calendar year) YY = Year code (last 2 digits of calendar year) WW = Week code (week of January 1 is week '01')	% = Minimum Voltage M: 1.7 min

Country of Origin	Device Grade	Atmel Truncation
CO = Country of Origin	H or U: Industrial Grade	AT: Atmel ATM: Atmel ATML: Atmel

Trace Code
NNN = Alphanumeric Trace Code (2 Characters for Small Package)

© 2018-2026 Microchip Technology Inc. and its subsidiaries

8-Lead Plastic Dual In-Line (P) - 300 mil Body [PDIP]

Note: For the most current package drawings, please see the Microchip Packaging Specification located at http://www.microchip.com/packaging

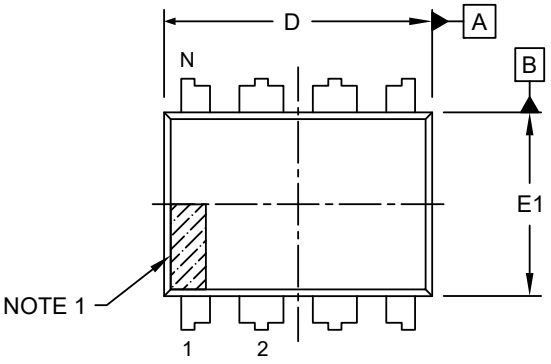

TOP VIEW

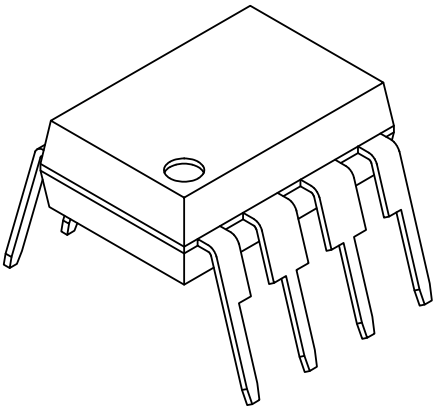

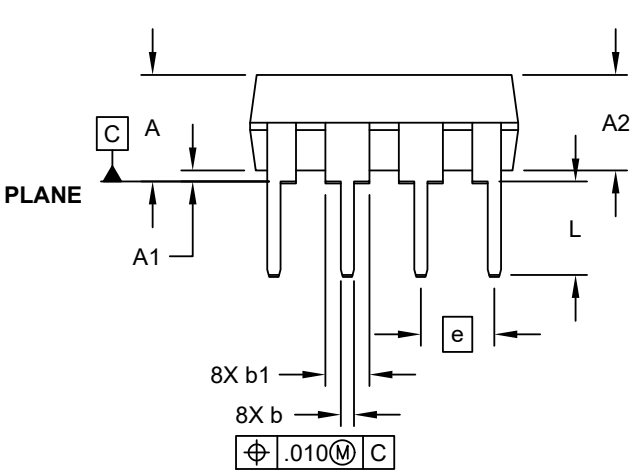

SIDE VIEW

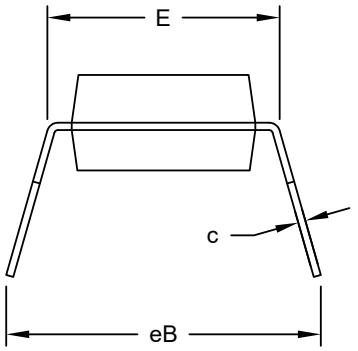

END VIEW

Microchip Technology Drawing No. C04-018-P Rev G Sheet 1 of 2

© 2018-2026 Microchip Technology Inc. and its subsidiaries

8-Lead Plastic Dual In-Line (P) - 300 mil Body [PDIP]

Note: For the most current package drawings, please see the Microchip Packaging Specification located at http://www.microchip.com/packaging

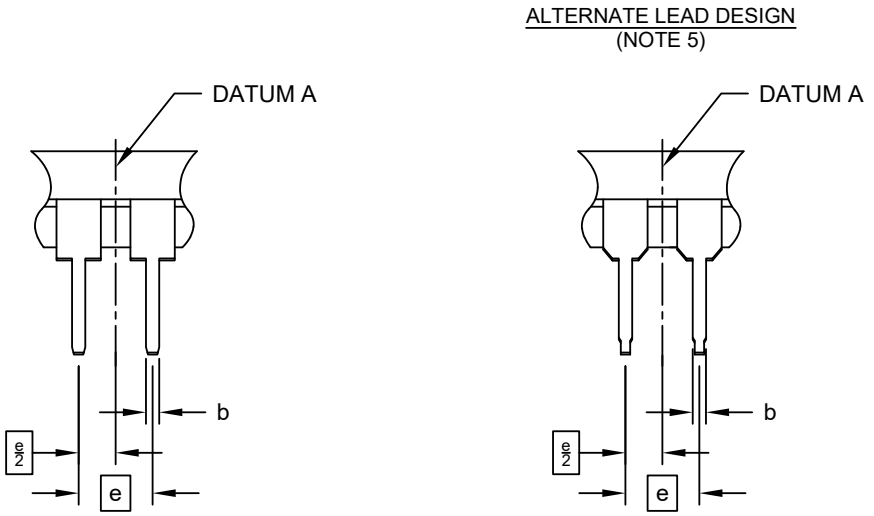

Units		INCHES		
Dimension Limits		MIN	NOM	MAX
Number of Pins	N		8	
Pitch	e		.100 BSC	
Top to Seating Plane	A	-	-	.210
Molded Package Thickness	A2	.115	.130	.195
Base to Seating Plane	A1	.015	-	-
Shoulder to Shoulder Width	E	.290	.310	.325
Molded Package Width	E1	.240	.250	.280
Overall Length	D	.348	.365	.400
Tip to Seating Plane	L	.115	.130	.150
Lead Thickness	c	.008	.010	.015
Upper Lead Width	b1	.040	.060	.070
Lower Lead Width	b	.014	.018	.022
Overall Row Spacing §	eB	-	-	.430

Notes:

1. Pin 1 visual index feature may vary, but must be located within the hatched area.
2. § Significant Characteristic
3. Dimensions D and E1 do not include mold flash or protrusions. Mold flash or protrusions shall not exceed .010" per side.
4. Dimensioning and tolerancing per ASME Y14.5M
   BSC: Basic Dimension. Theoretically exact value shown without tolerances.
5. Lead design above seating plane may vary, based on assembly vendor.

Microchip Technology Drawing No. C04-018-P Rev G Sheet 2 of 2

© 2018-2026 Microchip Technology Inc. and its subsidiaries

8-Lead Plastic Small Outline (SN) - Narrow, 3.90 mm (.150 In.) Body [SOIC]

Note: For the most current package drawings, please see the Microchip Packaging Specification located at http://www.microchip.com/packaging

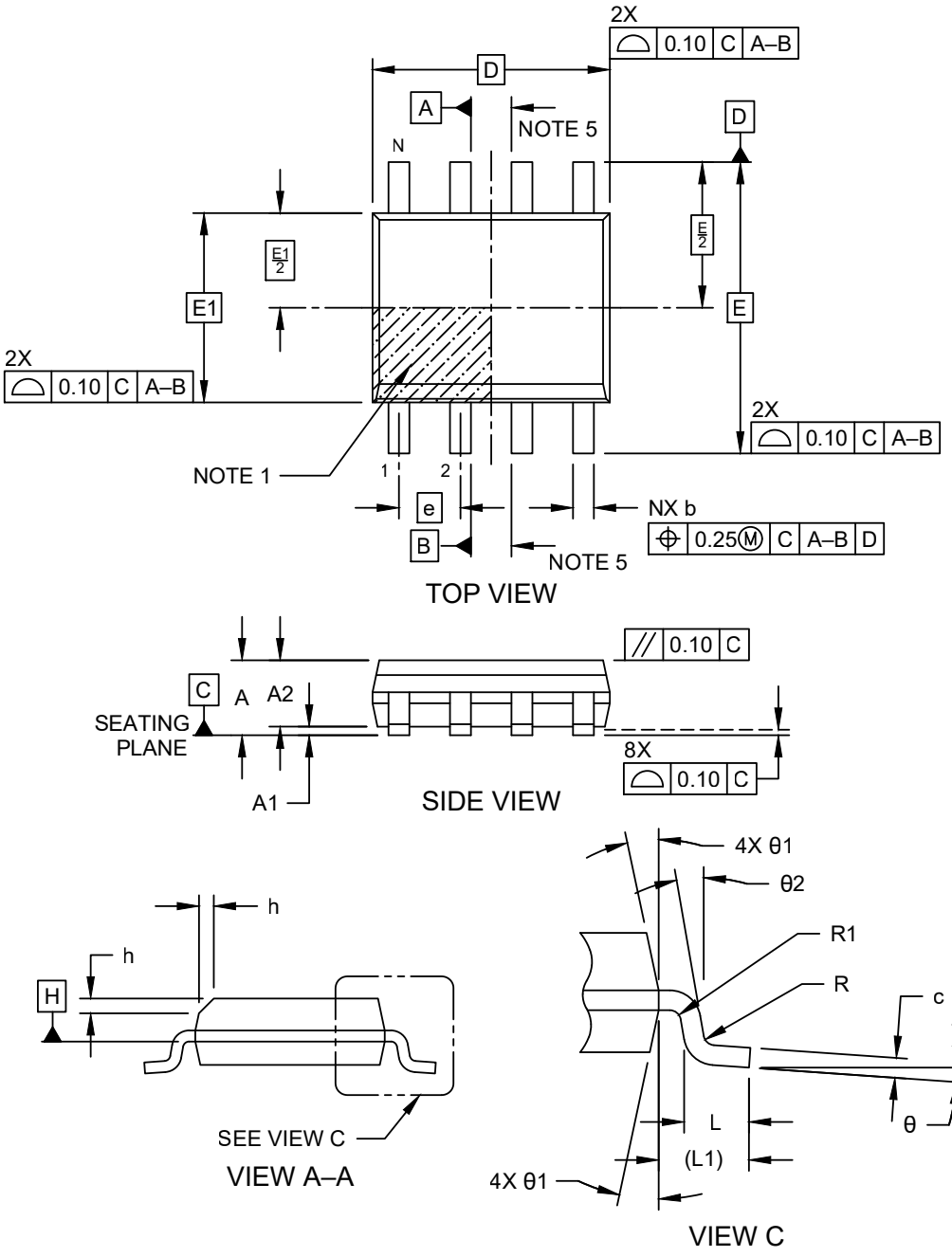

Microchip Technology Drawing No. C04-00057-SN Rev L Sheet 1 of 2

© 2018-2026 Microchip Technology Inc. and its subsidiaries

8-Lead Plastic Small Outline (SN) - Narrow, 3.90 mm (.150 In.) Body [SOIC]

Note: For the most current package drawings, please see the Microchip Packaging Specification located at http://www.microchip.com/packaging

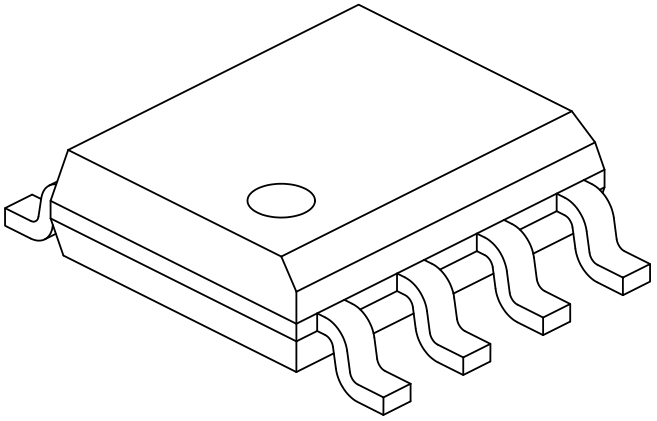

Units		MILLIMETERS		
Dimension Limits		MIN	NOM	MAX
Number of Pins	N		8	
Pitch	e		1.27 BSC	
Overall Height	A	–	–	1.75
Molded Package Thickness	A2	1.25	–	-
Standoff §	A1	0.10	–	0.25
Overall Width	E		6.00 BSC	
Molded Package Width	E1		3.90 BSC	
Overall Length	D		4.90 BSC	
Chamfer (Optional)	h	0.25	–	0.50
Foot Length	L	0.40	–	1.27
Footprint	L1		1.04 REF	
Lead Thickness	c	0.17	–	0.25
Lead Width	b	0.31	–	0.51
Lead Bend Radius	R	0.07	–	–
Lead Bend Radius	R1	0.07	–	–
Foot Angle	θ	0°	–	8°
Mold Draft Angle	θ1	5°	–	15°
Lead Angle	θ2	0°	–	–

Notes:

1. The Pin 1 visual index feature may vary, but it must be located within the hatched area.
2. § Significant Characteristic
3. Dimensions D and E1 do not include mold flash or protrusions. Mold flash or protrusions shall not exceed 0.15mm per side.
4. Dimensioning and tolerancing per ASME Y14.5M
   BSC: Basic Dimension. Theoretically exact value shown without tolerances.
   REF: Reference Dimension, usually without tolerance, for information purposes only.
5. Datums A & B to be determined at Datum H.

Microchip Technology Drawing No. C04-00057-SN Rev L Sheet 2 of 2

© 2018-2026 Microchip Technology Inc. and its subsidiaries

8-Lead Plastic Small Outline (SN) - Narrow, 3.90 mm (.150 In.) Body [SOIC]

Note: For the most current package drawings, please see the Microchip Packaging Specification located at http://www.microchip.com/packaging

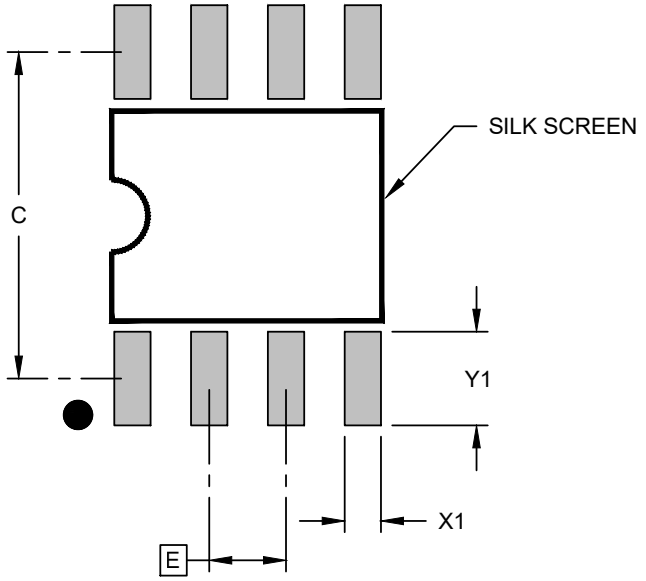

RECOMMENDED LAND PATTERN

Units		MILLIMETERS		
Dimension Limits		MIN	NOM	MAX
Contact Pitch	E		1.27 BSC	
Contact Pad Spacing	C		5.40	
Contact Pad Width (X8)	X1			0.60
Contact Pad Length (X8)	Y1			1.55

Notes:

1. Dimensioning and tolerancing per ASME Y14.5M

BSC: Basic Dimension. Theoretically exact value shown without tolerances.

Microchip Technology Drawing C04-02057-SN Rev L

© 2018-2026 Microchip Technology Inc. and its subsidiaries

5-Lead Plastic Small Outline Transistor (OT) [SOT-23]

Note: For the most current package drawings, please see the Microchip Packaging Specification located at http://www.microchip.com/packaging

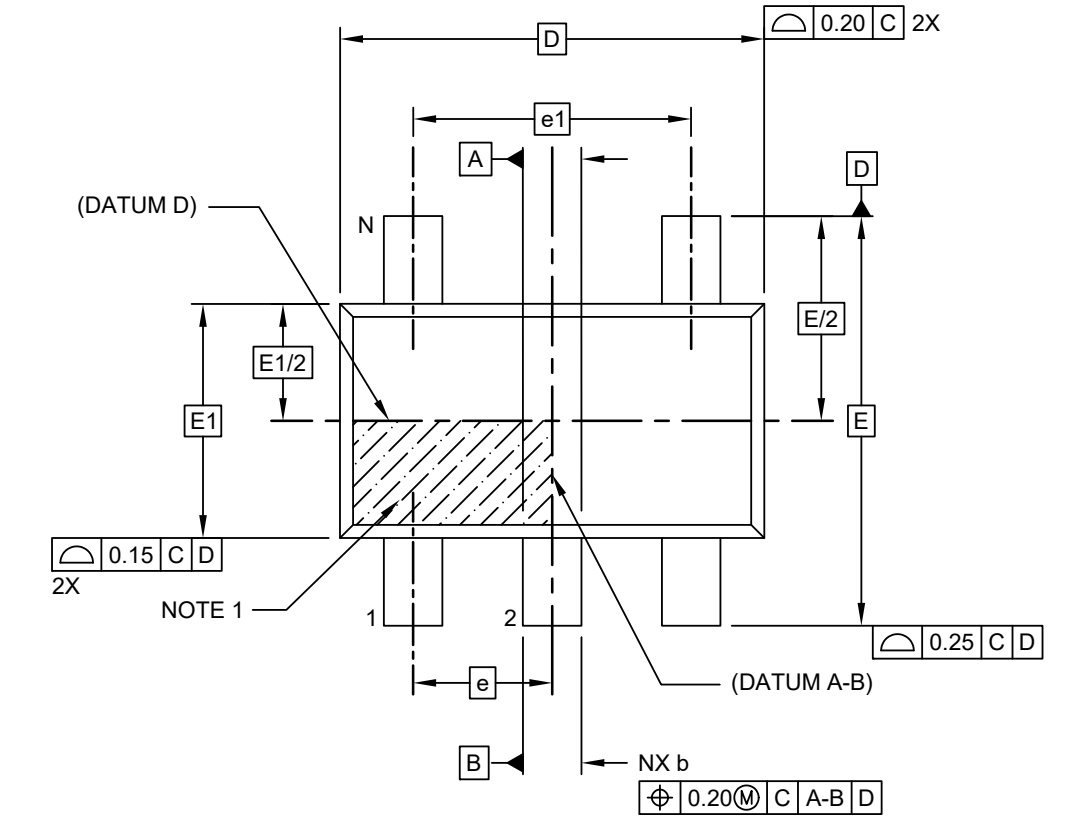

TOP VIEW

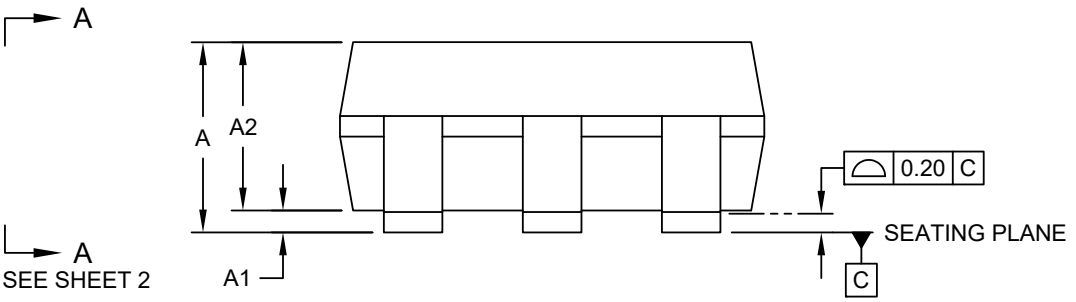

SIDE VIEW

Microchip Technology Drawing C04-091-OT Rev H Sheet 1 of 2

© 2018-2026 Microchip Technology Inc. and its subsidiaries

5-Lead Plastic Small Outline Transistor (OT) [SOT-23]

Note: For the most current package drawings, please see the Microchip Packaging Specification located at http://www.microchip.com/packaging

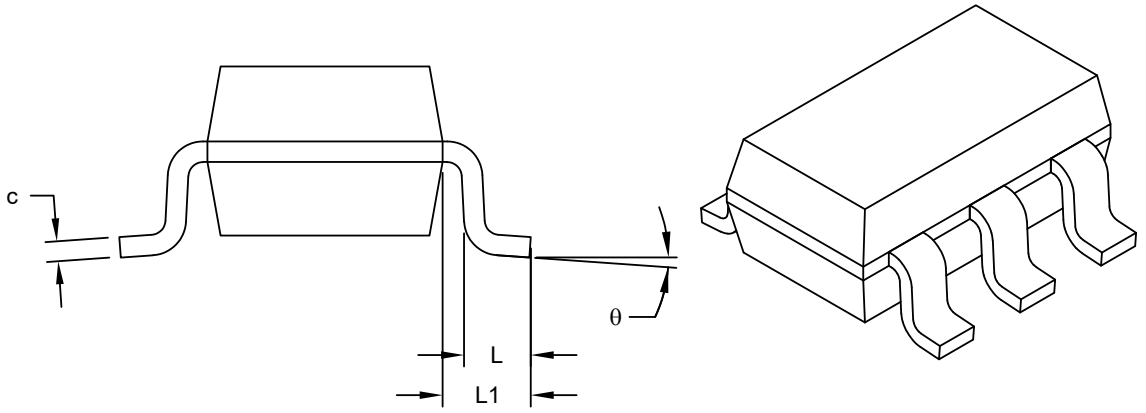

VIEW A-A
SHEET 1

Units		MILLIMETERS		
Dimension Limits		MIN	NOM	MAX
Number of Pins	N		5	
Pitch	e		0.95 BSC	
Outside lead pitch	e1		1.90 BSC	
Overall Height	A	0.90	-	1.45
Molded Package Thickness	A2	0.89	-	1.30
Standoff	A1	-	-	0.15
Overall Width	E		2.80 BSC	
Molded Package Width	E1		1.60 BSC	
Overall Length	D		2.90 BSC	
Foot Length	L	0.30	-	0.60
Footprint	L1		0.60 REF	
Foot Angle	θ	0°	-	10°
Lead Thickness	c	0.08	-	0.26
Lead Width	b	0.20	-	0.51

Notes:

1. Dimensions D and E1 do not include mold flash or protrusions. Mold flash or protrusions shall not exceed 0.25mm per side.
2. Dimensioning and tolerancing per ASME Y14.5M
   BSC: Basic Dimension. Theoretically exact value shown without tolerances.
   REF: Reference Dimension, usually without tolerance, for information purposes only.

Microchip Technology Drawing C04-091-OT Rev H Sheet 2 of 2

© 2018-2026 Microchip Technology Inc. and its subsidiaries

5-Lead Plastic Small Outline Transistor (OT) [SOT-23]

Note: For the most current package drawings, please see the Microchip Packaging Specification located at http://www.microchip.com/packaging

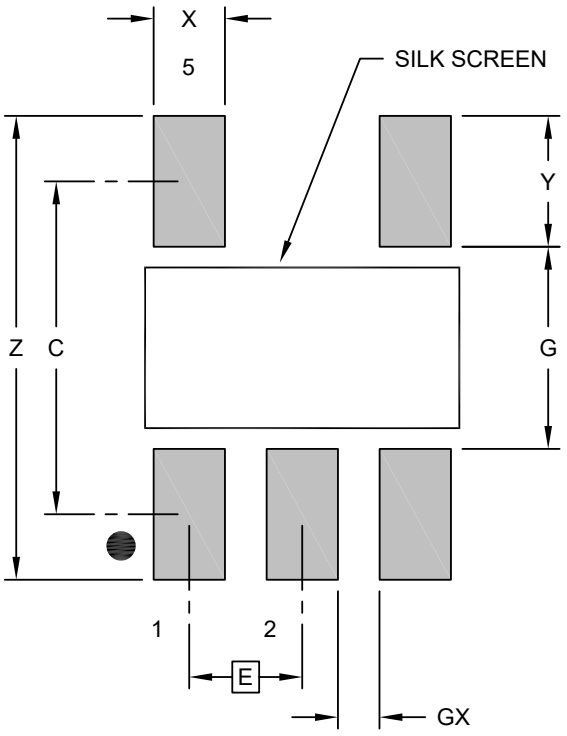

RECOMMENDED LAND PATTERN

Units		MILLIMETERS		
Dimension Limits		MIN	NOM	MAX
Contact Pitch	E		0.95 BSC	
Contact Pad Spacing	C		2.80	
Contact Pad Width (X5)	X			0.60
Contact Pad Length (X5)	Y			1.10
Distance Between Pads	G	1.70		
Distance Between Pads	GX	0.35		
Overall Width	Z			3.90

Notes:

1. Dimensioning and tolerancing per ASME Y14.5M

BSC: Basic Dimension. Theoretically exact value shown without tolerances.

Microchip Technology Drawing No. C04-2091-OT Rev H

© 2018-2026 Microchip Technology Inc. and its subsidiaries

8-Lead Plastic Thin Shrink Small Outline (ST) - 4.4 mm Body [TSSOP]

Note:	For the most current package drawings, please see the Microchip Packaging Specification located at http://www.microchip.com/packaging

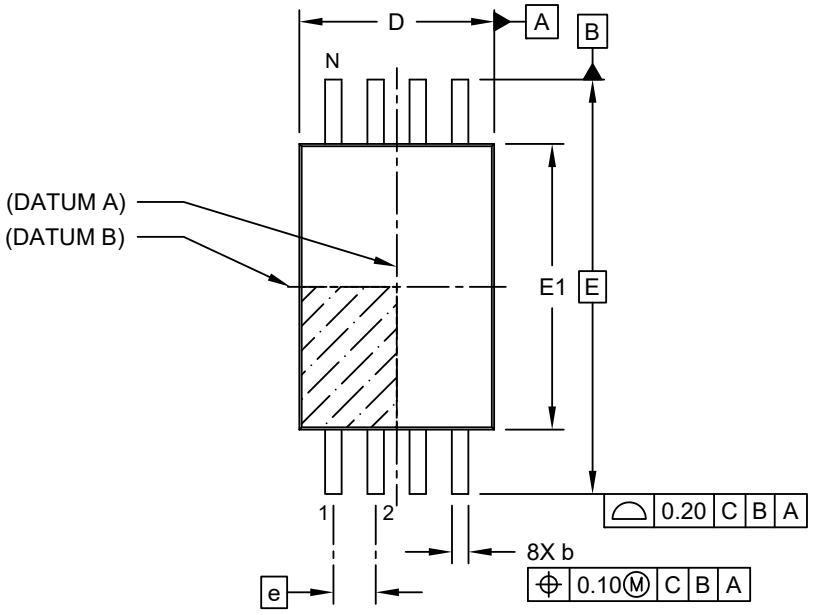

TOP VIEW

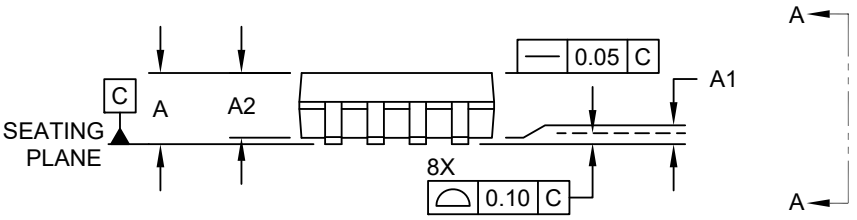

SIDE VIEW

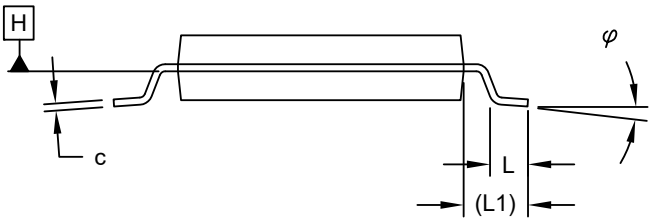

VIEW A-A

Microchip Technology Drawing C04-086 Rev C Sheet 1 of 2

© 2018-2026 Microchip Technology Inc. and its subsidiaries

8-Lead Plastic Thin Shrink Small Outline (ST) - 4.4 mm Body [TSSOP]

Note: For the most current package drawings, please see the Microchip Packaging Specification located at http://www.microchip.com/packaging

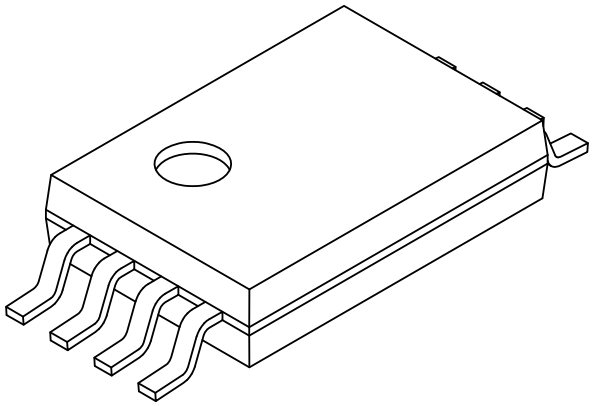

Units		MILLIMETERS		
Dimension Limits		MIN	NOM	MAX
Number of Pins	N		8	
Pitch	e		0.65 BSC	
Overall Height	A	-	-	1.20
Molded Package Thickness	A2	0.80	1.00	1.05
Standoff	A1	0.05	-	-
Overall Width	E		6.40 BSC	
Molded Package Width	E1	4.30	4.40	4.50
Overall Length	D	2.90	3.00	3.10
Foot Length	L	0.45	0.60	0.75
Footprint	L1		1.00 REF	
Lead Thickness	c	0.09	-	0.25
Foot Angle	φ	0°	4°	8°
Lead Width	b	0.19	-	0.30

Notes:

1. Pin 1 visual index feature may vary, but must be located within the hatched area.
2. Dimensions D and E1 do not include mold flash or protrusions. Mold flash or protrusions shall not exceed 0.20mm per side.
3. Dimensioning and tolerancing per ASME Y14.5M

BSC: Basic Dimension. Theoretically exact value shown without tolerances.
REF: Reference Dimension, usually without tolerance, for information purposes only.

Microchip Technology Drawing C04-086 Rev C Sheet 2 of 2

© 2018-2026 Microchip Technology Inc. and its subsidiaries

8-Lead Plastic Thin Shrink Small Outline (ST) - 4.4 mm Body [TSSOP]

Note:	For the most current package drawings, please see the Microchip Packaging Specification located at http://www.microchip.com/packaging

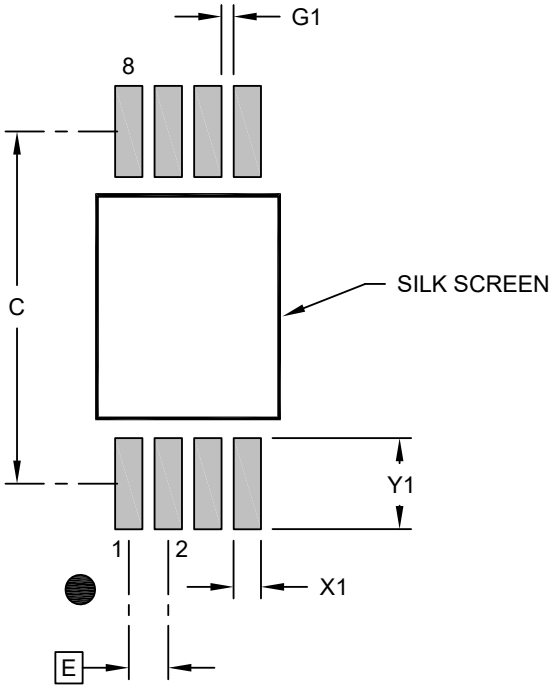

RECOMMENDED LAND PATTERN

Units		MILLIMETERS		
Dimension Limits		MIN	NOM	MAX
Contact Pitch	E	0.65 BSC		
Contact Pad Spacing	C		5.80	
Contact Pad Width (X8)	X1			0.45
Contact Pad Length (X8)	Y1			1.50
Contact Pad to Center Pad (X6)	G1	0.20		

Notes:

1. Dimensioning and tolerancing per ASME Y14.5M
   BSC: Basic Dimension. Theoretically exact value shown without tolerances.
2. For best soldering results, thermal vias, if used, should be filled or tented to avoid solder loss during reflow process

Microchip Technology Drawing C04-2086 Rev B

© 2018-2026 Microchip Technology Inc. and its subsidiaries

8-Lead Ultra Thin Plastic Dual Flat, No Lead Package (Q4B) - 2x3 mm Body [UDFN]
Atmel Legacy Global Package Code YNZ

Note: For the most current package drawings, please see the Microchip Packaging Specification located at http://www.microchip.com/packaging

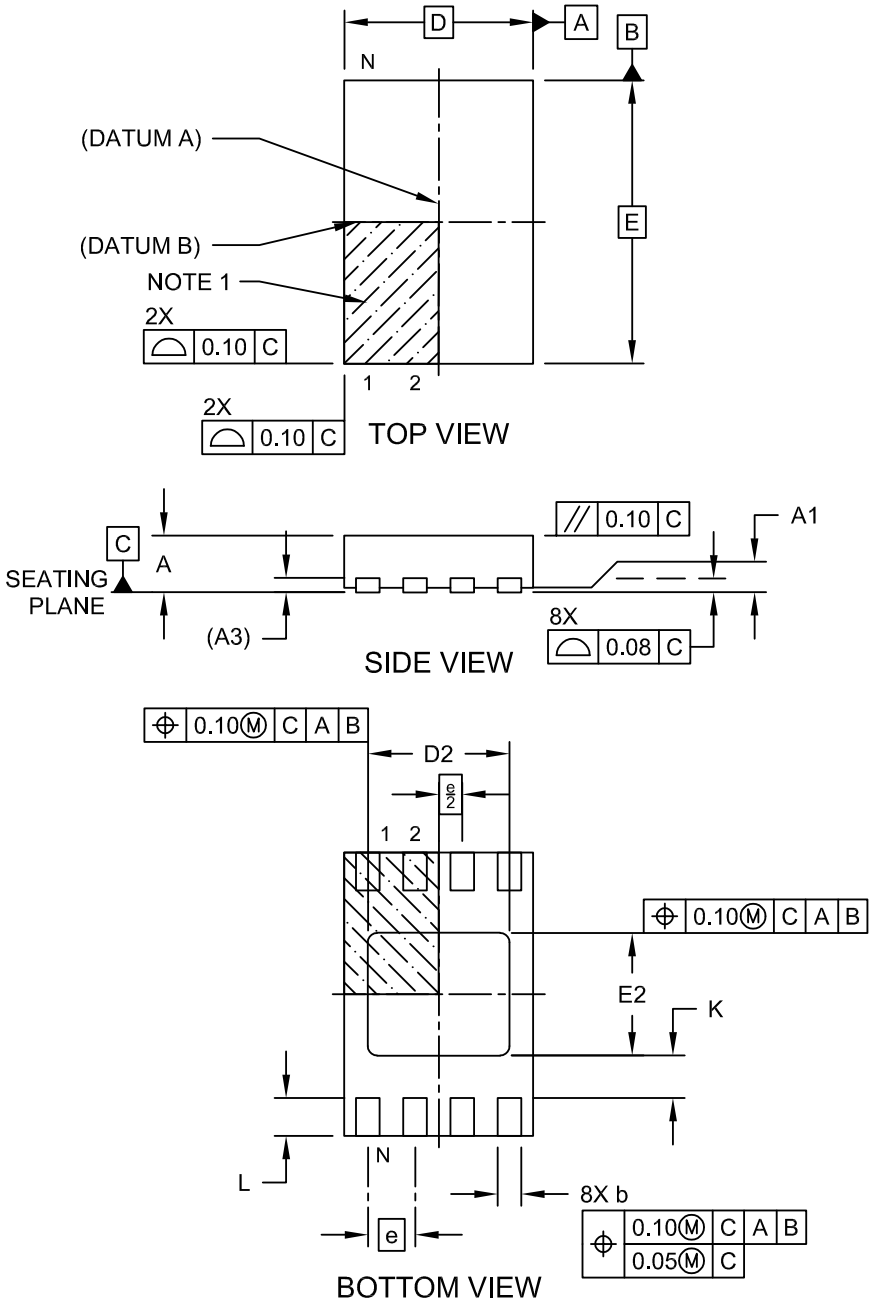

Microchip Technology Drawing C04-21355-Q4B Rev C Sheet 1 of 2

© 2018-2026 Microchip Technology Inc. and its subsidiaries

8-Lead Ultra Thin Plastic Dual Flat, No Lead Package (Q4B) - 2x3 mm Body [UDFN]
Atmel Legacy Global Package Code YNZ

Note: For the most current package drawings, please see the Microchip Packaging Specification located at http://www.microchip.com/packaging

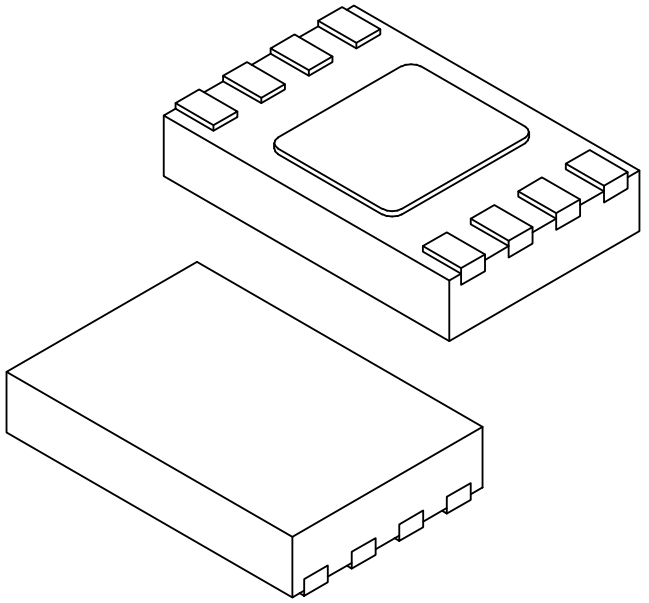

Units		MILLIMETERS		
Dimension Limits		MIN	NOM	MAX
Number of Terminals	N		8	
Pitch	e		0.50 BSC	
Overall Height	A	0.50	0.55	0.60
Standoff	A1	0.00	0.02	0.05
Terminal Thickness	A3		0.152 REF	
Overall Length	D		2.00 BSC	
Exposed Pad Length	D2	1.40	1.50	1.60
Overall Width	E		3.00 BSC	
Exposed Pad Width	E2	1.20	1.30	1.40
Terminal Width	b	0.18	0.25	0.30
Terminal Length	L	0.25	0.35	0.45
Terminal-to-Exposed-Pad	K	0.20	-	-

Notes:

1. Pin 1 visual index feature may vary, but must be located within the hatched area.
2. Package is saw singulated
3. Dimensioning and tolerancing per ASME Y14.5M

BSC: Basic Dimension. Theoretically exact value shown without tolerances.
REF: Reference Dimension, usually without tolerance, for information purposes only.

Microchip Technology Drawing C04-21355-Q4B Rev C Sheet 2 of 2

© 2018-2026 Microchip Technology Inc. and its subsidiaries

8-Lead Ultra Thin Plastic Dual Flat, No Lead Package (Q4B) - 2x3 mm Body [UDFN]
Atmel Legacy Global Package Code YNZ

Note: For the most current package drawings, please see the Microchip Packaging Specification located at http://www.microchip.com/packaging

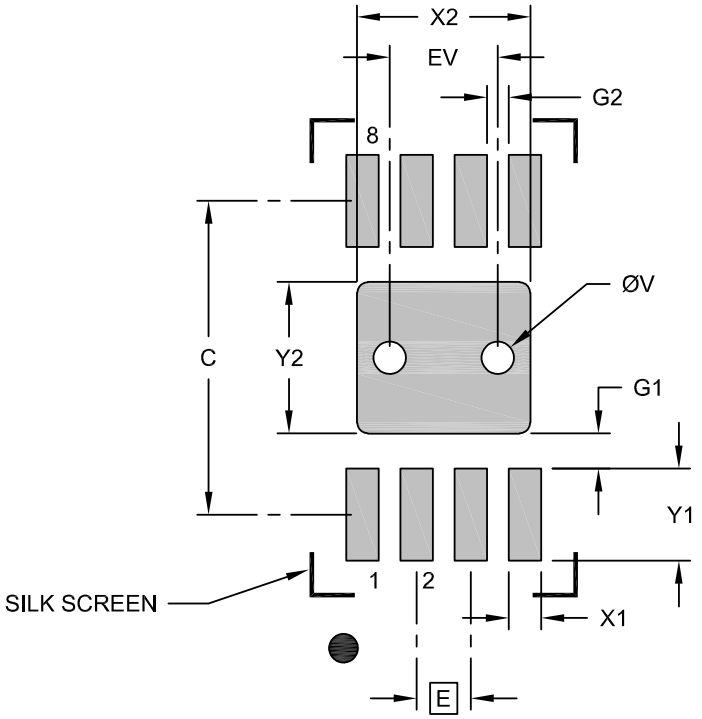

RECOMMENDED LAND PATTERN

Units		MILLIMETERS		
Dimension Limits		MIN	NOM	MAX
Contact Pitch	E		0.50 BSC	
Optional Center Pad Width	X2			1.60
Optional Center Pad Length	Y2			1.40
Contact Pad Spacing	C		2.90	
Contact Pad Width (X8)	X1			0.30
Contact Pad Length (X8)	Y1			0.85
Contact Pad to Center Pad (X8)	G1	0.33		
Contact Pad to Contact Pad (X6)	G2	0.20		
Thermal Via Diameter	V		0.30	
Thermal Via Pitch	EV		1.00	

Notes:

1. Dimensioning and tolerancing per ASME Y14.5M
   BSC: Basic Dimension. Theoretically exact value shown without tolerances.
2. For best soldering results, thermal vias, if used, should be filled or tented to avoid solder loss during reflow process

Microchip Technology Drawing C04-23355-Q4B Rev C

© 2018-2026 Microchip Technology Inc. and its subsidiaries

11. Revision History

Revision B (November 2026)
Removed the VFBGA package due to its end-of-life status. Made minor editorial revisions throughout the document.

Revision A (November 2018)
Updated to the Microchip template. Microchip DS20006086 replaces Atmel document 8896. Updated part marking information. Updated the "Software Reset" section. Added ESD rating. Removed lead finish designation. Updated trace code format in package markings. Updated section content throughout for clarification. Updated the 8U3-1 VFBGA package drawing. Updated the PDIP, SOIC, TSSOP, SOT-23 and UDFN package drawings to Microchip format.

Atmel Document 8896 Revision E (January 2017)
Updated Power On Requirements and Reset Behavior section.

Atmel Document 8896 Revision D (December 2016)
Part marking SOT-23: Moved backside mark (YMXX) to front side line2. Added @ = Country of Assembly.

Atmel Document 8896 Revision C (January 2015)
Added 100 kHz timing set for reference, the UDFN extended quantity option, and the figure for “System Configuration Using 2-Wire Serial EEPROMs”. Updated the 8MA2 and 8P3 package outline drawings.

Atmel Document 8896 Revision B (July 2014)
Updated from preliminary to complete status and the 8X and 8MA2 package drawings.

Atmel Document 8896 Revision A (March 2014)
Initial release of this document.

© 2018-2026 Microchip Technology Inc. and its subsidiaries

12. Product Identification System

To order or obtain information, for example, on pricing or delivery, contact Microchip: https://www.microchip.com/en-us/about/contact-us.

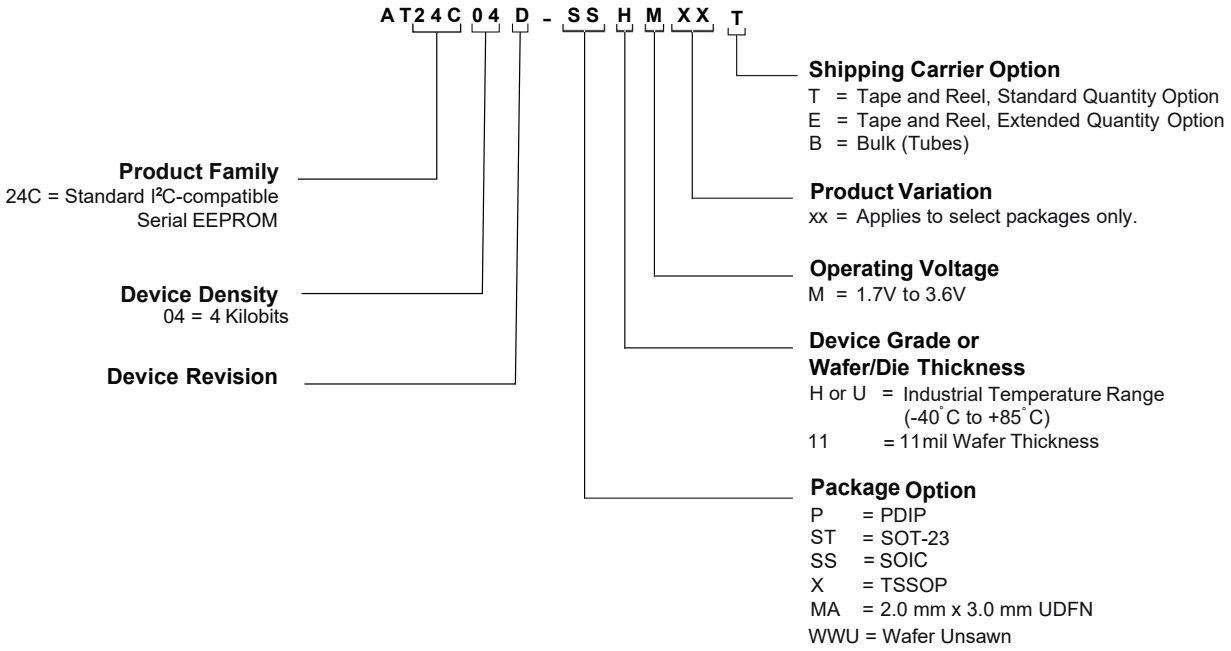

Note: Refer to automotive data sheet for automotive grade ordering information.

Examples

Device	Package	Package Drawing Code	Package Option	Shipping Carrier Option	Device Grade
AT24C04D-PUM	PDIP	P	P	Bulk (Tubes)	Industrial Temperature (-40°C to 85°C)
AT24C04D-SSHM-T	SOIC	SN	SS	Tape and Reel	
AT24C04D-STUM-T	SOT-23	OT	ST	Tape and Reel	
AT24C04D-XHM-B	TSSOP	ST	X	Bulk (Tubes)	
AT24C04D-MAHM-T	UDFN	Q4B	MA	Tape and Reel	
AT24C04D-MAHM-E	UDFN	Q4B	MA	Extended Qty. Tape and Reel	

© 2018-2026 Microchip Technology Inc. and its subsidiaries

Microchip Information

Trademarks

The “Microchip” name and logo, the “M” logo, and other names, logos, and brands are registered and unregistered trademarks of Microchip Technology Incorporated or its affiliates and/or subsidiaries in the United States and/or other countries (“Microchip Trademarks”). Information regarding Microchip Trademarks can be found at https://www.microchip.com/en-us/about/legal-information/microchip-trademarks.

Legal Notice

This publication and the information herein may be used only with Microchip products, including to design, test, and integrate Microchip products with your application. Use of this information in any other manner violates these terms. Information regarding device applications is provided only for your convenience and may be superseded by updates. It is your responsibility to ensure that your application meets with your specifications. Contact your local Microchip sales office for additional support or, obtain additional support at www.microchip.com/en-us/support/design-help/client-support-services.

THIS INFORMATION IS PROVIDED BY MICROCHIP “AS IS”. MICROCHIP MAKES NO REPRESENTATIONS OR WARRANTIES OF ANY KIND WHETHER EXPRESS OR IMPLIED, WRITTEN OR ORAL, STATUTORY OR OTHERWISE, RELATED TO THE INFORMATION INCLUDING BUT NOT LIMITED TO ANY IMPLIED WARRANTIES OF NON-INFRINGEMENT, MERCHANTABILITY, AND FITNESS FOR A PARTICULAR PURPOSE, OR WARRANTIES RELATED TO ITS CONDITION, QUALITY, OR PERFORMANCE.

IN NO EVENT WILL MICROCHIP BE LIABLE FOR ANY INDIRECT, SPECIAL, PUNITIVE, INCIDENTAL, OR CONSEQUENTIAL LOSS, DAMAGE, COST, OR EXPENSE OF ANY KIND WHATSOEVER RELATED TO THE INFORMATION OR ITS USE, HOWEVER CAUSED, EVEN IF MICROCHIP HAS BEEN ADVISED OF THE POSSIBILITY OR THE DAMAGES ARE FORESEEABLE. TO THE FULLEST EXTENT ALLOWED BY LAW, MICROCHIP’S TOTAL LIABILITY ON ALL CLAIMS IN ANY WAY RELATED TO THE INFORMATION OR ITS USE WILL NOT EXCEED THE AMOUNT OF FEES, IF ANY, THAT YOU HAVE PAID DIRECTLY TO MICROCHIP FOR THE INFORMATION.

Use of Microchip devices in life support and/or safety applications is entirely at the buyer’s risk, and the buyer agrees to defend, indemnify and hold harmless Microchip from any and all damages, claims, suits, or expenses resulting from such use. No licenses are conveyed, implicitly or otherwise, under any Microchip intellectual property rights unless otherwise stated.

Microchip Devices Code Protection Feature

Note the following details of the code protection feature on Microchip products:

- Microchip products meet the specifications contained in their particular Microchip Data Sheet.
- Microchip believes that its family of products is secure when used in the intended manner, within operating specifications, and under normal conditions.
- Microchip values and aggressively protects its intellectual property rights. Attempts to breach the code protection features of Microchip products are strictly prohibited and may violate the Digital Millennium Copyright Act.
- Neither Microchip nor any other semiconductor manufacturer can guarantee the security of its code. Code protection does not mean that we are guaranteeing the product is “unbreakable”. Code protection is constantly evolving. Microchip is committed to continuously improving the code protection features of our products.

© 2018-2026 Microchip Technology Inc. and its subsidiaries

Product Page Links

AT24C04D

© 2018-2026 Microchip Technology Inc. and its subsidiaries