DRAWING REPLACES:
SD-120108-083

PART MATRIX

E	1	1	A	0	6	0	1	6	M	X	X	X	X

- E = ETHERNET/ EtherCat
- HEADS: 1=M12 D-Coding 1=M12 D-Coding
- WIRING TYPE: A=4 Pole (STRAIGHT WIRED)
- HEADS STYLE: 060 = MALE STR/MALE STR
- CABLE TYPE :
- Units: M = Meter T = 10x Meter
- Length Examples: 005 = 0.5 m, 010 = 1 m, 050 = 5 m, 100 = 10 m, 150 = 15 m
- H=2 PCS ID CARRIER

WIRING DIAGRAM

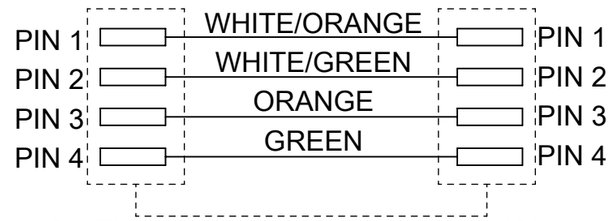

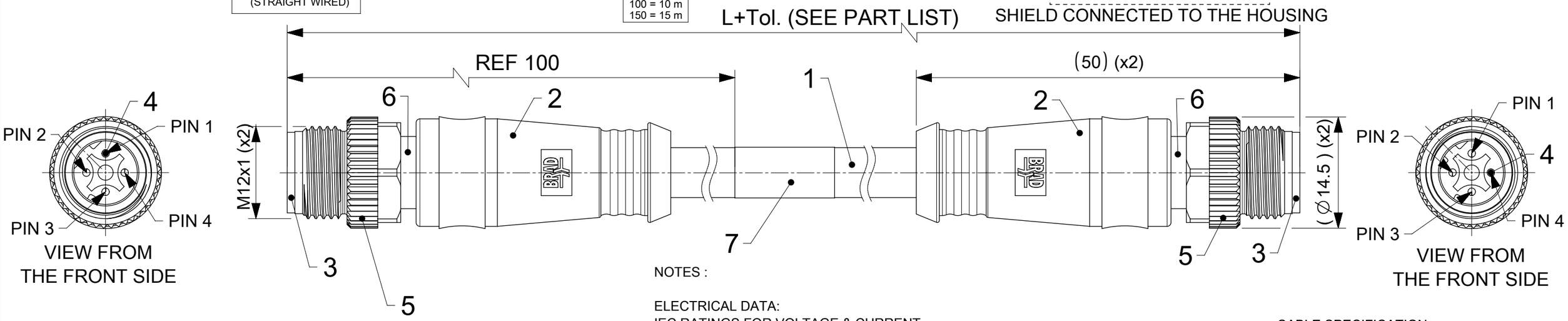

NOTES :

ELECTRICAL DATA:
IEC RATINGS FOR VOLTAGE & CURRENT
VOLTAGE RATING: 250V AC/DC
AMPERAGE RATING: 4A

UL RATINGS FOR VOLTAGE & CURRENT
VOLTAGE RATING: 30V DC
AMPERAGE RATING: 1.5A

INSULATION RESISTANCE: 10^8 Ω MIN.
MATING CYCLES: MIN. 100

ENVIRONMENTAL:
PROTECTION: IP 67
OPERATING TEMPERATURE:
FOR M12 CONNECTOR: -25°C TO +85°C
FOR CABEL: -40°C TO +80°C (FIXED)
-10°C TO +70°C (FLEX)

TRANSMISSION CHARACTERISTICS ACCORDING TO
ISO/IEC 11801 CATEGORY 5e
PATCH CORD PROFINET TYPE C

CABLE SPECIFICATION
CONDUCTOR:
MATERIAL: BARE COPPER
SECTION: 0.22mm² - 24AWG
INSULATION:
COMPOUND: PE
DIAMETER: ∅1.20mm
COLOR: WHITE/ORANGE, WHITE/GREEN, ORANGE, GREEN
JACKET:
COMPOUND: TPU
COLOR: TEAL
DIAMETER: ∅6.5mm

PART LIST

MOLEX PN	ENGINEERING NO	L+Tol.[mm]
1201088438	E11A06016M380	38000
1201088420	E11A06016M010	1000
1201088421	E11A06016M020	2000
1201088422	E11A06016M030	3000
1201088423	E11A06016M040	4000
1201088424	E11A06016M050	5000
1201088425	E11A06016M060	6000
1201088426	E11A06016M080	8000
1201088427	E11A06016M100	10000
1201088428	E11A06016M120	12000
1201088429	E11A06016M150	15000
1201088430	E11A06016M180	18000
1201088431	E11A06016M200	20000
1201088432	E11A06016M230	23000
1201088433	E11A06016M250	25000
1201088434	E11A06016M270	27000
1201088435	E11A06016M300	30000
1201088436	E11A06016M340	34000
1201088437	E11A06016M350	35000
1201088438	E11A06016M380	38000
1201088439	E11A06016M400	40000
1201088440	E11A06016M450	45000

MOLEX PN	ENGINEERING NO	L+Tol.[mm]
1201088441	E11A06016M500	50000
1201088442	E11A06016M550	55000
1201088443	E11A06016M600	60000
1201088444	E11A06016M650	65000
1201088445	E11A06016M700	70000
1201088446	E11A06016M750	75000
1201088447	E11A06016M760	76000
1201088448	E11A06016M800	80000
1201088449	E11A06016M850	85000
1201088506	E11A06016M070	7000
1201088509	E11A06016M420	42000
1201088510	E11A06016M530	53000
1201088511	E11A06016M570	57000
1201088525	E11A06016M900	90000
1201088585	E11A06016M460	46000
1201088586	E11A06016M540	54000
1201088587	E11A06016M610	61000
1201088588	E11A06016M950	95000
1201088763	E11A06016M680	68000
1201088774	E11A06016M003	300
1201088775	E11A06016M006	600
1201088844	E11A06016M002	200

TABLE 2

CABLE LENGTH TOLERANCES	
LENGTH	TOLERANCE
0m-1m	+40 mm
>1m-5m	+60 mm
>5m-10m	+80 mm
>10m-20m	+140 mm
>20m-30m	+160 mm
>30m	+1% length

BOM

ITEM	QTY	DESCRIPTION	MATERIAL	FINISH
7	1	LABEL	VINYL	YELLOW
6	2	M12 SHIELD SLEEVE	BRASS	Ni-PLATED
5	2	NUT M12 MA HEX SW13	BRASS	Ni-PLATED
4	8	CONTACT 10 MA STA	BRASS	SELECTED GOLD OVER NICKEL
3	2	INSERT M12 MA 4P DC	PUR	BLACK
2	-	OVER MOULD	TPU	BLACK
1	-	CABLE #24-2-2 TEAL WELD SLAG RESIST	TPU	TEAL

THIS DRAWING CONTAINS INFORMATION THAT IS PROPRIETARY TO MOLEX ELECTRONIC TECHNOLOGIES, LLC AND SHOULD NOT BE USED WITHOUT WRITTEN PERMISSION

FUNCTIONAL SYMBOLS: FA = 0, FC = 0, FP = 0
DIVISIONAL SYMBOLS

DIMENSION UNITS: mm
SCALE: 2:1

GENERAL TOLERANCES (UNLESS SPECIFIED)

ANGULAR TOL	±	1.0 °
4 PLACES	±	
3 PLACES	±	
2 PLACES	±	0.05
1 PLACE	±	0.3
0 PLACES	±	0.5

DRAFT WHERE APPLICABLE MUST REMAIN WITHIN DIMENSIONS

CURRENT REV DESC: LENGTH CORRECTED FOR 1201088511, ELECTRICAL VALUES UPDATED

EC NO: 852892
DRWN: APAWLAK01 2026/04/14
CHK'D: CARLOG18 2026/04/15
APPR: HKNEELAND 2026/04/23

INITIAL REVISION:
DRWN: MDHARMANTI 2021/08/03
APPR: RSILLER 2021/12/21

THIRD ANGLE PROJECTION | DRAWING: A3-SIZE | SERIES: 120108

molex

CSE M12 ETH 4P DC MA MA STR WSOR XM DE

PRODUCT CUSTOMER DRAWING

DOCUMENT NUMBER	DOC TYPE	DOC PART	REVISION
1201088420	PSD	000	A1

MATERIAL NUMBER	CUSTOMER	SHEET NUMBER
SEE PART LIST	GENERAL MARKET	1 OF 1

DOCUMENT STATUS	P1	RELEASE DATE	2026/04/23 23:47:43

FORMAT: master-Sized-A3
REVISION: J
DATE: 2020/01/16