TOP1.5GS11/90 7 2STI OR

Weidmüller Interface GmbH & Co. KG
Klingenbergstraße 26
D-32758 Detmold
Germany

www.weidmueller.com

Do not use product for new developments

Product image

Similar to illustration

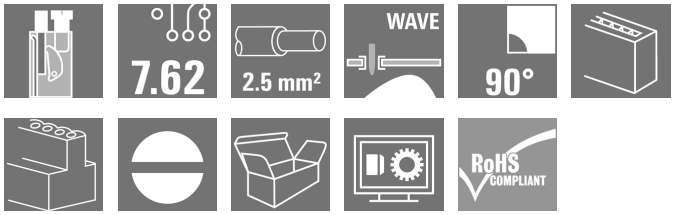

Conductor entry and screw connection in the same direction on this PCB terminal with 7.62 mm pitch for conductor cross-sections up to 2.5 mm². Conductor outlet direction 90° and 180°.

General ordering data

Version	Printed circuit board terminals, 7.62 mm, Number of poles: 11, 90°, Solder pin length (l): 3.5 mm, tinned, orange, TOP connection, Clamping range, max. : 2.5 mm², Box
Order No.	0394060000
Type	TOP1.5GS11/90 7 2STI OR
GTIN (EAN)	4032248189205
Qty.	20 pc(s).
Product data	IEC: 1000 V / 24 A / 0.5 - 2.5 mm² UL: 300 V / 10 A / AWG 26 - AWG 14
Packaging	Box
Delivery status	This article will no longer be available in the future.
Available until	2023-03-31

TOP1.5GS11/90 7 2STI OR

Weidmüller Interface GmbH & Co. KG
Klingenbergstraße 26
D-32758 Detmold
Germany

www.weidmueller.com

Technical data

Dimensions and weights

Depth	19.5 mm	Depth (inches)	0.768 inch
Height	22 mm	Height (inches)	0.866 inch
Height of lowest version	18.5 mm	Width	85.62 mm
Width (inches)	3.371 inch	Net weight	45.65 g

System parameters

Product family	OMNIMATE Signal - series TOP1.5GS	Wire connection method	TOP connection
Mounting onto the PCB	THT solder connection	Conductor outlet direction	90°
Pitch in mm (P)	7.62 mm	Pitch in inches (P)	0.3 inch
Number of poles	11	Pin series quantity	1
Fitted by customer	No	Number of rows	1
Solder pin length (l)	3.5 mm	Solder pin dimensions	0.8 x 1.0 mm
Solder eyelet hole diameter (D)	1.3 mm	Solder eyelet hole diameter tolerance (D)	+ 0,1 mm
Number of solder pins per pole	2	Screwdriver blade	0.6 x 3.5
Screwdriver blade standard	DIN 5264	Tightening torque, min.	0.4 Nm
Tightening torque, max.	0.5 Nm	Clamping screw	M 2.5
Stripping length	10 mm	L1 in mm	76.2 mm
L1 in inches	3 inch	Touch-safe protection acc. to DIN VDE 0470	IP 20
Touch-safe protection acc. to DIN VDE 57 106	Safe from finger touch	Protection degree	IP20
Volume resistance	1.20 mΩ		

Material data

Insulating material	PA	Colour	orange
Colour chart (similar)	RAL 2000	Insulating material group	I
Comparative Tracking Index (CTI)	≥ 600	Insulation strength	≥ 10^8 Ω
UL 94 flammability rating	V-2	Contact material	CuZn
Contact surface	tinned	Layer structure of solder connection	1.5...3 µm Ni / 4...6 µm Sn
Storage temperature, min.	-40 °C	Storage temperature, max.	70 °C
Operating temperature, min.	-50 °C	Operating temperature, max.	100 °C
Temperature range, installation, min.	-25 °C	Temperature range, installation, max.	100 °C

Conductors suitable for connection

Clamping range, min.	0.13 mm²
Clamping range, max.	2.5 mm²
Wire connection cross section AWG, min.	AWG 26
Wire connection cross section AWG, max.	AWG 14
Solid, min. H05(07) V-U	0.5 mm²
Solid, max. H05(07) V-U	2.5 mm²
Flexible, min. H05(07) V-K	0.5 mm²
Flexible, max. H05(07) V-K	2.5 mm²
w. plastic collar ferrule, DIN 46228 pt 4, min.	0.5 mm²
w. plastic collar ferrule, DIN 46228 pt 4, max.	2.5 mm²
w. wire end ferrule, DIN 46228 pt 1, min.	0.5 mm²
w. wire end ferrule, DIN 46228 pt 1, max.	2.5 mm²

Weidmüller

TOP1.5GS11/90 7 2STI OR

Weidmüller Interface GmbH & Co. KG
Klingenbergstraße 26
D-32758 Detmold
Germany

www.weidmueller.com

Technical data

Plug gauge in accordance with EN 60999 a x b; ø	2.4 mm x 1.5 mm		
Clampable conductor	Cross-section for conductor connection	Type	fine-wired
		nominal	0.5 mm²
	wire end ferrule	Stripping length	nominal 12 mm
		Recommended wire-end ferrule	H0,5/16 OR
		Stripping length	nominal 10 mm
		Recommended wire-end ferrule	H0,5/10
	Cross-section for conductor connection	Type	fine-wired
		nominal	0.75 mm²
	wire end ferrule	Stripping length	nominal 12 mm
		Recommended wire-end ferrule	H0,75/16 W
		Stripping length	nominal 10 mm
		Recommended wire-end ferrule	H0,75/10
	Cross-section for conductor connection	Type	fine-wired
		nominal	1 mm²
	wire end ferrule	Stripping length	nominal 12 mm
		Recommended wire-end ferrule	H1,0/16D R
		Stripping length	nominal 10 mm
		Recommended wire-end ferrule	H1,0/10
	Cross-section for conductor connection	Type	fine-wired
		nominal	1.5 mm²
	wire end ferrule	Stripping length	nominal 10 mm
		Recommended wire-end ferrule	H1,5/10
		Stripping length	nominal 12 mm
		Recommended wire-end ferrule	H1,5/16 R
	Cross-section for conductor connection	Type	fine-wired
		nominal	2.5 mm²
	wire end ferrule	Stripping length	nominal 10 mm
		Recommended wire-end ferrule	H2,5/10
Reference text	Length of ferrules is to be chosen depending on the product and the rated voltage., The outside diameter of the plastic collar should not be larger than the pitch (P)		

Rated data acc. to IEC

tested acc. to standard	IEC 60664-1, IEC 61984	Rated current, min. number of poles (Tu=20°C)	24 A
Rated current, max. number of poles (Tu=20°C)	19 A	Rated current, min. number of poles (Tu=40°C)	21 A
Rated current, max. number of poles (Tu=40°C)	16 A	Rated voltage for surge voltage class / pollution degree II/2	1,000 V
Rated voltage for surge voltage class / pollution degree III/2	630 V	Rated voltage for surge voltage class / pollution degree III/3	400 V
Rated impulse voltage for surge voltage class/ pollution degree II/2	4 kV	Rated impulse voltage for surge voltage class/ pollution degree III/2	4 kV
Rated impulse voltage for surge voltage class/ contamination degree III/3	4 kV	Short-time withstand current resistance	3 x 1s with 120 A

TOP1.5GS11/90 7 2STI OR

Weidmüller Interface GmbH & Co. KG
Klingenbergstraße 26
D-32758 Detmold
Germany

www.weidmueller.com

Technical data

Rated data acc. to CSA

Institute (CSA)		Certificate No. (CSA)	
			154685-1501716
Rated voltage (Use group B / CSA)	300 V	Rated voltage (Use group D / CSA)	300 V
Rated current (Use group B / CSA)	10 A	Rated current (Use group D / CSA)	10 A
Wire cross-section, AWG, min.	AWG 26	Wire cross-section, AWG, max.	AWG 14
Reference to approval values	Specifications are maximum values, details - see approval certificate.		

Rated data acc. to UL 1059

Rated voltage (Use group B / UL 1059)	300 V	Rated voltage (Use group D / UL 1059)	300 V
Rated current (Use group B / UL 1059)	10 A	Rated current (Use group D / UL 1059)	10 A
Wire cross-section, AWG, min.	AWG 26	Wire cross-section, AWG, max.	AWG 14

Packing

Packaging	Box	VPE length	223 mm
VPE width	179 mm	VPE height	67 mm

Classifications

ETIM 6.0	EC002643	ETIM 7.0	EC002643
ETIM 8.0	EC002643	ETIM 9.0	EC002643
ECLASS 9.0	27-44-04-01	ECLASS 9.1	27-44-04-01
ECLASS 10.0	27-44-04-01	ECLASS 11.0	27-46-01-01
ECLASS 12.0	27-46-01-01	ECLASS 13.0	27460101

Important note

IPC conformity	Conformity: The products are developed, manufactured and delivered according international recognized standards and norms and comply with the assured properties in the data sheet resp. fulfill decorative properties in accordance with IPC-A-610 "Class 2". Further claims on the products can be evaluated on request.
Notes	• Additional variants on request • Rated current related to rated cross-section & min. No. of poles. • Wire end ferrule without plastic collar to DIN 46228/1 • Wire end ferrule with plastic collar to DIN 46228/4 • Crimp form A for wire end ferrules with PZ 6/5 crimping tool are recommended for the largest cable sizes. • P on drawing = pitch • Rated data refer only to the component itself. Clearance and creepage distances to other components are to be designed in accordance with the relevant application standards. • Long term storage of the product with average temperature of 50 °C and maximum humidity 70%, 36 months

TOP1.5GS11/90 7 2STI OR

Weidmüller Interface GmbH & Co. KG
Klingenbergstraße 26
D-32758 Detmold
Germany

www.weidmueller.com

Technical data

Approvals

Approvals	
ROHS	Conform

Downloads

Engineering Data	CAD data – STEP
Catalogues	Catalogues in PDF-format
Brochures	FL DRIVES EN FL ANALO.SIGN.CONV. EN MB DEVICE MANUF. EN FL DRIVES DE FL BUILDING SAFETY EN FL APPL LED LIGHTING EN FL INDUSTR.CONTROLS EN FL MACHINE SAFETY EN FL HEATING ELECTR EN FL APPL_INVERTER EN FL_BASE_STATION_EN FL ELEVATOR EN FL POWER SUPPLY EN FL 72H SAMPLE SER EN PO OMNIMATE EN PO OMNIMATE EN

TOP1.5GS11/90 7 2STI OR

Weidmüller Interface GmbH & Co. KG
Klingenbergstraße 26
D-32758 Detmold
Germany

www.weidmueller.com

Drawings

Dimensional drawing

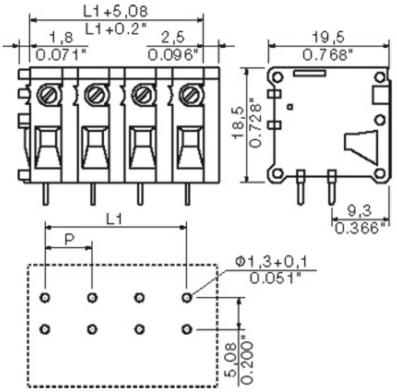

Graph

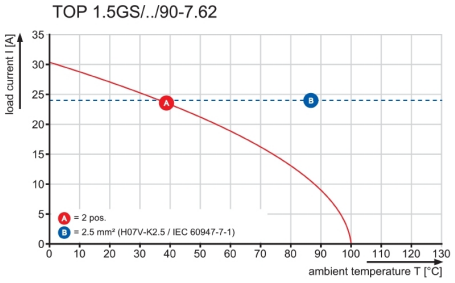

TOP1.5GS11/90 7 2STI OR

Weidmüller Interface GmbH & Co. KG
Klingenbergstraße 26
D-32758 Detmold
Germany

www.weidmueller.com

Accessories

Mounting blocks

Minor component, major effect:
Clip-on attachment elements increase the mechanical resilience of the circuit board terminals.
Clip-on or pre-assembled - always the right solution:
- Hard-wearing, precise fitting dovetail joint
- Hard-wearing metal threaded inserts
- Suitable for all outlet directions

Maximum stability, minimum effort:
- Extremely resilient for frequent fastening operations
- Complete set for easy selection

The result: soldering points, contacts and overall module are more resilient against mechanical stress such as vibrations and tensile loads.

General ordering data

Type	TOP1.5GS BB OR	Version	Product data	Packaging
Order No.	1539860000	Printed circuit board terminals, Accessories, Mounting block, orange,		Box
GTIN (EAN)	4008190061692	Number of poles: 1		
Qty.	20 pc(s).			

MASSE OHNE TOLERANZ SIND KEINE PRUEFMASSE
DIMS. WITHOUT TOLERANCE ARE NOT CONTROL DIMS.

DIE DEUTSCHE VERSION IST VERBINDLICH
THE GERMAN VERSION IS BINDING

WEITERGABE SOWIE VERVIELFAELTIGUNG DIESES DOKUMENTS, VERWERTUNG UND MITTEILUNG SEINES INHALTS SIND VERBOTEN, SOWEIT NICHT AUSDRUECKLICH GESTATTET.
ZUWIDERHANDLUNGEN VERPFLICHTEN ZU SCHADENERSATZ. ALLE RECHTE FUER DEN FALL DER PATENT-, GEBRAUCHSMUSTER- ODER GESCHMACKSMUSTEREINTRAGUNG VORBEHALTEN.
THE REPRODUCTION, DISTRIBUTION AND UTILIZATION OF THIS DOCUMENT AS WELL AS THE COMMUNICATION OF ITS CONTENTS TO OTHERS WITHOUT EXPLICID AUTHORIZATION IS PROHIBITED.
OFFENDERS WILL BE HELD LIABLE FOR THE PAYMENT OF DAMAGES. ALL RIGHTS RESERVED IN THE EVENT OF THE GRANT OF A PATENT, UTILITY MODEL OR DESIGN.

Technical Data

Rev.

Material data			
Insulation material type		PA 66	
Insulation material colours		S 33230	
Insulation material flammability class	UL94	V-2	
Insulation resistance	MOhm	10^3	
Contact base material		CuZn	
Contact plating (mating end)		Tin-plated	
Contact plating (solder end)		n/a	

System characteristic values	together with counterpart		
Pitch **P**	mm/inch	7.62 / 0.3	
Number of rows		1	
Dielectric strength (r.m.s withstand voltage)	kV	2.5	
Conductor connection methode		TOP connection	
Plug in force (max.)	N/pole	n/a	1)
Pull out force (max.)	N/pole	n/a	1)
Through resistance (typical)	mOhm	0.9	
Operating temperature range	°C	-20....+100	2)
Degree of protection acc. to VDE 0106 (plugged/unplugged)		finger safe	
Degree of protection acc. to DIN EN 60529 (plugged/unplugged)		IP20	
Solder pin length **L**	mm/inch	3.5	
PCB hole diameter **D** (wave soldering)	mm/inch	1.3	3)
PCB hole diameter **D** (reflow soldering)	mm/inch	n/a	4)
Resistance to soldering heat acc. to DIN IEC 60512-6	°C/sec	260/10	5)
Resistance to soldering heat acc. to EN 61760-1	°C/sec	n/a	6)
Solderability classification acc. to EN 61760-1		n/a	
Solder connection type		wave soldering	
Solder pin diameter **d** (max.)	mm/inch	1.28/0.05	

Application notes			
Coding possibility	yes/no	no	
Joinable without loss of pitch	yes/no	no	
Manual assembly of modules	yes/no	yes	
Max. number of poles	n	12	

IEC 664-1 / VDE0110 (4.97) rated data					
Rated cross section acc. to EN 60999	mm^2	1.5			
Rated current @ 20°C ambient (together with)	A	16			7)
Rated current @ 40°C ambient (together with)	A	xxx			7)
Overvoltage category / Pollution degree		**III/3**	**III/2**	**II/2**	
Rated voltage	V	500	630	1000	
Rated impulse voltage	kV	6.0	6.0	6.0	

UL 1059 rated data File No.: E60693		**B**	**C**	**D**
Rated voltage	V	300		300
Rated current	A	10		10
Clamping range	mm^2 / AWG	0.5...1.5/26..14		

CSA C22.2 rated data File No.: LR12400		**B**	**C**	**D**
Rated voltage	V	300		300
Rated current	A	10		10
Clamping range	mm^2 / AWG	0.5.....1.5/26....14		

Packaging	carton
Downloads	www.weidmueller.de

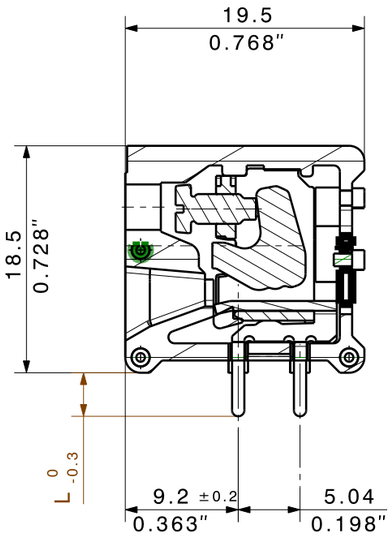

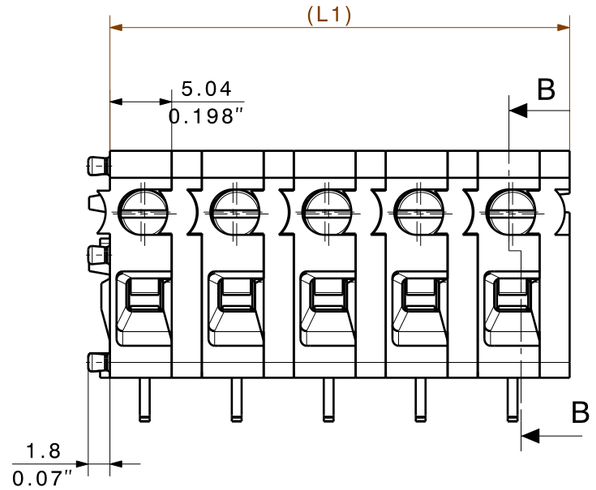

Drilling Diagram

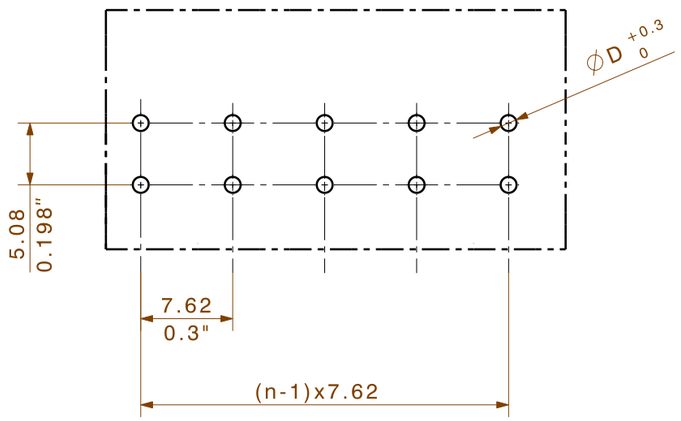

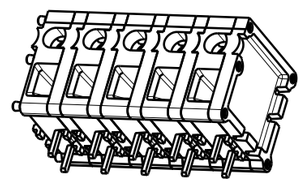

n	L1 [mm]	L1 [Inch]
12	91,44	3,600
11	83,82	3,300
10	76,20	3,000
9	68,58	2,700
8	60,96	2,400
7	53,34	2,100
6	45,72	1,800
5	38,10	1,500
4	30,48	1,200
3	22,86	0,900
2	15,24	0,600
1	7,62	0,300

(02) Zeichnung komplett überarbeitet

1) Without locking latches
2) Sum of ambient temperature and temperature rise
3) Recommendation for manual assembly
4) Recommendation for automatic assembly
5) Recommendation for wave soldering
6) Recommendation for reflow soldering
7) Referred to rated cross section and minimum pole number

n.a. = not applicable

Subject to technical changes

For the mounting of PCBs, it should be noted that the rated data stated here relates only to the PCB components alone.
The neccessary creepage and clearance paths must be observed in connection with the respective applicant in accordance to IEC 664 / VDE 0110.
The current-carrying capacity and pitch tolerance is to be determined according to DIN IEC 326 part 3 very fine.

Weidmüller PCB components are tested to the DIN EN 61984 standard, and are valid for its field of application.
Provided that the components are used to the intended purpose, all requirements with respect to the occuring of electrical, mechanical, thermic and corrosive stress will be satisfied.

METRIC TOLERANCES:
X. = ±0.3
X.X = ±0.1
X.XX = ±0.05

METRIC/INCH DIMENSIONS

SCALE: 2:1
SUPERSEDES: .
SUPERSEDED BY: .

35928/5
05.09.06 KRUG_M 01
MODIFICATION

	DATE	NAME
DRAWN	06.04.2004	HEINEL_M
RESPONSIBLE		KRUG_M
CHECKED	05.09.2006	HECKERT_M
APPROVED		GUENTHER_W

Weidmüller

CAT.NO.: .
C 33230 (02)
DRAWING NO. ISSUE NO.
SHEET 3 OF 4 SHEETS

TOP 1.5 GS /90 2STI

PRODUCT FILE:

Recommended wave solderding profiles

Weidmüller Interface GmbH & Co. KG
Klingenbergstraße 16
D-32758 Detmold
Germany
Fon: +49 5231 14-0
Fax: +49 5231 14-292083
www.weidmueller.com

Single Wave:

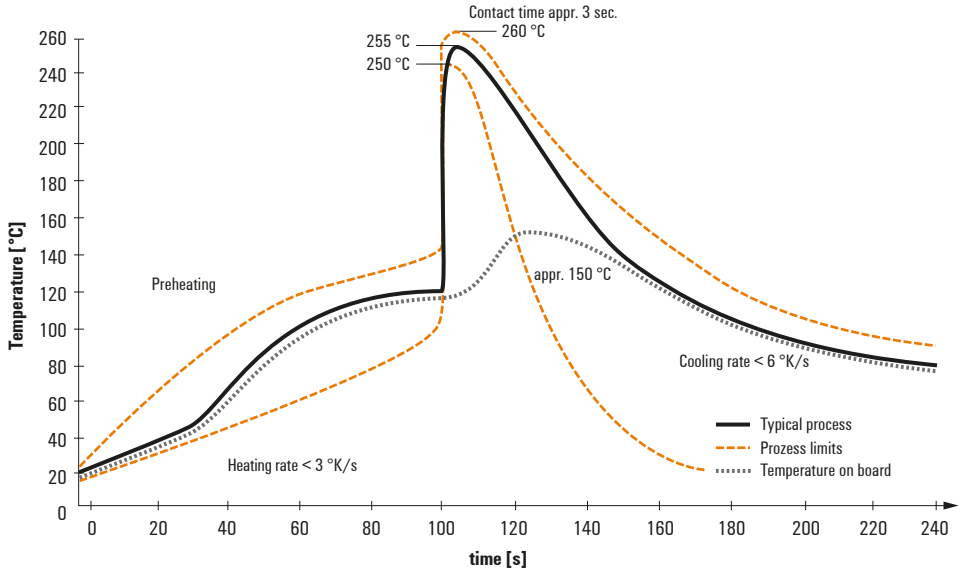

Double Wave:

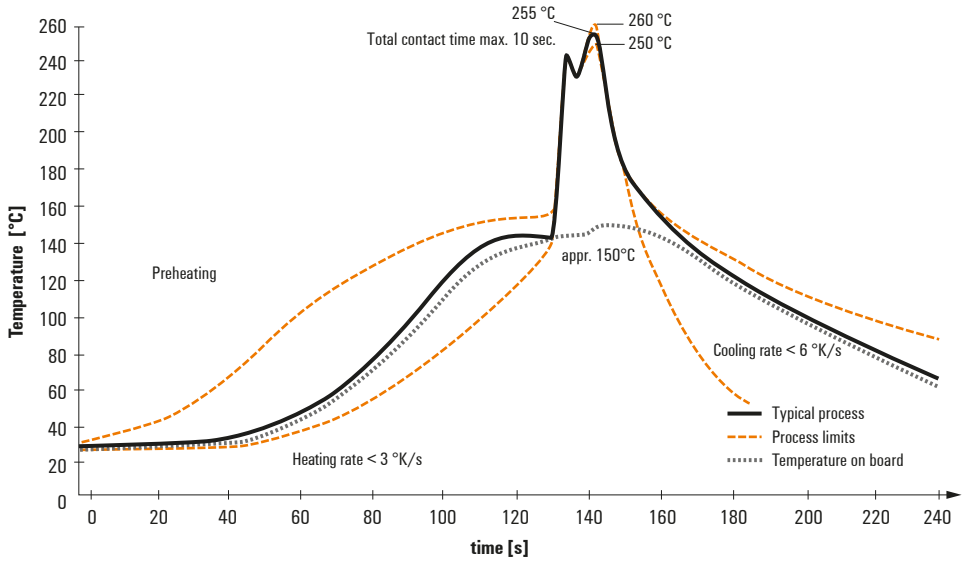

Wave soldering profiles

Wired connection elements should be processed in accordance with the DIN EN 61760-1 standard. We have included two recommendations for practical wave soldering profiles, with which Weidmüller PCB terminals and connectors are qualified.

When choosing a suitable profile for your application, the following factors also need to be considered:
- PCB thickness
- Proportion of Cu in the layers
- Single/double-sided assembly
- Product range
- Heating and cooling rates

The single and double wave profiles each indicate the recommended operating range, including the maximum soldering temperature of 260°C. In practice, the maximum soldering temperature is quite often well below the above maximum profile.

We reserve the right to make technical changes.