IE-C6EL8UG0200XCAU40-2X

Weidmüller Interface GmbH & Co. KG
Klingenbergstraße 26
D-32758 Detmold
Germany

www.weidmueller.com

Assembled IE cables for EtherNet/IP applications with plug-in connector, type M12 X, cat. 6A, according to IEC 61076-2-109 and RJ45 plug-in connector for 10 GBit/s applications

General ordering data

Version	System cable, RJ45 IP 20, M12 x-type IP67 male, angled 90°, Cat.6A / Class EA (ISO/IEC 11801 2010), PUR, 20 m
Order No.	2694510200
Type	IE-C6EL8UG0200XCAU40-2X
GTIN (EAN)	4050118700527
Qty.	1 pc(s).

IE-C6EL8UG0200XCAU40-2X

Weidmüller Interface GmbH & Co. KG
Klingenbergstraße 26
D-32758 Detmold
Germany

www.weidmueller.com

Technical data

Dimensions and weights

Length	20 m	Length (inches)	787.402 inch
Net weight	925 g		

Temperatures

Storage temperature	-40 °C...80 °C	Operating temperature	-40 °C...80 °C
Installation temperature	-20 °C...60 °C		

Cable specific standards

Impervious to smoke	According to IEC 61034	Standard, assembly	UL Style 20963

Standards

Impervious to smoke	According to IEC 61034	Standard, assembly	UL Style 20963

Cable structure

Arrangement of wire cores	Twisted pair	Colour sequence or wires - wire pairs	white - blue, white - orange, white - green, white - brown
Complete shielding	Shielding braid made from copper wiring	Copper diameter	0.48 µm
Cross-section	4*2*AWG 26/7 - 4*2*0.128 mm²	Insulation	PE
Insulation cross-section	0.98 mm	Material sheath	PUR
Number of wires	8	Sheath diameter, max.	6.7 mm
Sheath diameter, min.	6.1 mm	Sheathing colour	green (RAL 6018)
Shielding	S/FTP	Shielding braid thickness	0.1 mm
Standard designations	S/FTP, LIO2YSC11Y 4x2x0.15 PIMF FRNC GN	Strands	7
Wire material	Stranded tin-plated copper wire	Wire pair shielding	Aluminium foil
Wiring	EIA/TIA T568 B		

Electrical properties of cable

Category	Cat.6A / Class EA (ISO/IEC 11801 2010)	Characteristic impedance	100 ± 5 Ω at 100MHz
Loop resistance	290 Ω/km	Signal propagation time	5.2 ns/m
Test voltage: wire-wire-shield	700 V_{rms}, 50 Hz, 1 min	Transfer impedance	15 mΩ/m at 1 MHz, 10 mΩ/m at 10 MHz, 30 mΩ/m at 30 MHz

Mechanical and material properties of cable

Abrasion resistance	very good	Halogen	halogen-free, according to IEC 60754-1
Impervious to smoke	According to IEC 61034	Min. bending radius, once only	5 x cable diameter
Min. bending radius, repetitive	10 x cable diameter	Resistance to oils	in accordance with IEC 60811-2-1
Resistance to spread of flame	in accordance with IEC 60332-1-2		

IE-C6EL8UG0200XCAU40-2X

Weidmüller Interface GmbH & Co. KG
Klingenbergstraße 26
D-32758 Detmold
Germany

www.weidmueller.com

Technical data

Plug

Plug	Cable side	right
	Version of contact face	RJ45
	Protection degree (IP)	IP20
	Gender of contact	male contact
	Outlet direction	straight
	Version of connector	plug
	Housing main material	Plastic
	Status indicator available	No
	Shielding available	Yes
	Cable side	left
	Version of contact face	M12
	Coding of plug	X-coded
	Protection degree (IP)	IP67
	Gender of contact	male contact
	Outlet direction	angled 90°
	Version of connector	plug
	Housing main material	Plastic
	Status indicator available	No
	Shielding available	Yes
Plug left	M12, X-coded, IP67, male contact, angled 90°, plug, Plastic, shielded	
Plug right	RJ45, IP20, male contact, straight, plug, Plastic, shielded	

Plug, left

Connector left	RJ45 IP 20	Plug left	M12, X-coded, IP67, male contact, angled 90°, plug, Plastic, shielded

Plug, right

Connector right	M12 x-type IP67 male, angled 90°	Plug right	RJ45, IP20, male contact, straight, plug, Plastic, shielded

Classifications

ETIM 6.0	EC002599	ETIM 7.0	EC002599
ETIM 8.0	EC002599	ETIM 9.0	EC002599
ECLASS 9.0	27-06-03-08	ECLASS 9.1	27-06-03-08
ECLASS 10.0	27-06-03-08	ECLASS 11.0	27-06-03-08
ECLASS 12.0	27-06-03-08	ECLASS 13.0	27060308

Environmental Product Compliance

REACH SVHC	Lead 7439-92-1
SCIP	67cf1078-beca-4687-860b-dc475a6ec24a

Approvals

ROHS	Conform

Downloads

Engineering Data	CAD data – STEP
Catalogues	Catalogues in PDF-format

Creation date December 4, 2023 10:33:31 AM CET

IE-C6EL8UG0200XCAU40-2X

Weidmüller Interface GmbH & Co. KG
Klingenbergstraße 26
D-32758 Detmold
Germany

www.weidmueller.com

Drawings

Wiring

Pinning

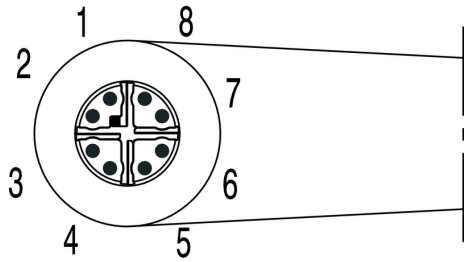

Detailed drawing

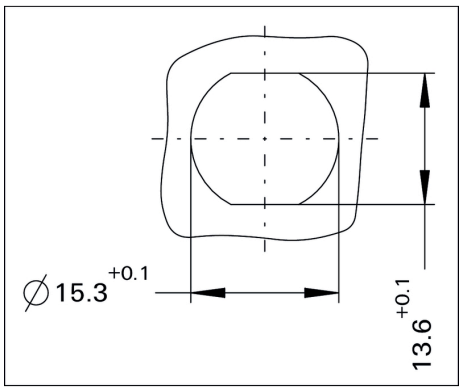

IE-C6EL8UG0200XCAU40-2X

Weidmüller Interface GmbH & Co. KG
Klingenbergstraße 26
D-32758 Detmold
Germany

www.weidmueller.com

Accessories

Blank

TM-I is an acknowledged and accredited marker type for traffic engineering applications. There are various different tag lengths available for individual labelling with long character strings. Easy handling of separation and installation thanks to the project marker field. Pre-attachment of sleeves and retrofitting of tags offer excellent versatility
The special contour of TM-I allows easy assembly and secures firm positioning. They are compatible with a number of commercially available sleeves. Thanks to the MultiCard format, the tags can be printed quickly and conveniently with the PrintJet CONNECT, plotter or the STI pen.

- Easy handling of separation and installation thanks to the project marker field.
- Acknowledged and accredited marker for traffic engineering applications
- Pre-attachment of sleeves and retrofitting of tags offer excellent versatility
- Not suited for labelling with P-Ink or STI pen in connection with CLI T sleeves

For custom printing: Please send us a file of our labeling software M-Print PRO or M-Print PRO Online (without installation) for your labeling specifications.

General ordering data

Type	TM-I 12 MC NE WS	Version
Order No.	1718411044	TM-I, Insert markers, 12 x 4 mm, white
GTIN (EAN)	4008190348977	
Qty.	320 pc(s).	

IE-C6EL8UG0200XCAU40-2X

Weidmüller Interface GmbH & Co. KG
Klingenbergstraße 26
D-32758 Detmold
Germany

www.weidmueller.com

Accessories

Blank

TM-I is an acknowledged and accredited marker type for traffic engineering applications. There are various different tag lengths available for individual labelling with long character strings. Easy handling of separation and installation thanks to the project marker field. Pre-attachment of sleeves and retrofitting of tags offer excellent versatility
The special contour of TM-I allows easy assembly and secures firm positioning. They are compatible with a number of commercially available sleeves. Thanks to the MultiCard format, the tags can be printed quickly and conveniently with the PrintJet CONNECT, plotter or the STI pen.

- Easy handling of separation and installation thanks to the project marker field.
- Acknowledged and accredited marker for traffic engineering applications
- Pre-attachment of sleeves and retrofitting of tags offer excellent versatility
- Not suited for labelling with P-Ink or STI pen in connection with CLI T sleeves

For custom printing: Please send us a file of our labeling software M-Print PRO or M-Print PRO Online (without installation) for your labeling specifications.

General ordering data

Type	TM-I 18 MC NE WS	Version
Order No.	1718431044	TM-I, Insert markers, 18 x 4 mm, white
GTIN (EAN)	4008190349011	
Qty.	320 pc(s).	