OMNIMATE Signal - series BL/SL 3.50
SLD 3.50/18/90F 3.2SN OR BX

Weidmüller Interface GmbH & Co. KG
Klingenbergstraße 16
D-32758 Detmold
Germany
Fon: +49 5231 14-0
Fax: +49 5231 14-292083
www.weidmueller.com

Product image

Similar to illustration

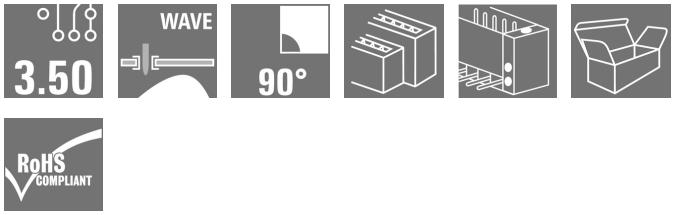

Two-tier pin header for wave soldering in 3.50 mm pitch. The connector is available in open, closed and flange versions. The male connectors provide space for labelling and can be coded. Packed in a cardboard box.

General ordering data

Type	SLD 3.50/18/90F 3.2SN OR BX
Order No.	1633880000
Version	PCB plug-in connector, male header, Flange, THT solder connection, 3.50 mm, No. of poles: 18, 90°, Solder pin length (l): 3.2 mm, tinned, Orange, Box
GTIN (EAN)	4008190258337
Qty.	20 pc(s).
Product data	IEC: 200 V / 10.5 A UL: 300 V / 8 A
Packaging	Box

OMNIMATE Signal - series BL/SL 3.50
SLD 3.50/18/90F 3.2SN OR BX

Weidmüller Interface GmbH & Co. KG
Klingenbergstraße 16
D-32758 Detmold
Germany
Fon: +49 5231 14-0
Fax: +49 5231 14-292083
www.weidmueller.com

Technical data

Dimensions and weights

Width	38.5 mm	Width (inches)	1.516 inch
Height	26.5 mm	Height (inches)	1.043 inch
Height of lowest version	23.3 mm	Depth	24.7 mm
Depth (inches)	0.972 inch	Net weight	13.2 g

System specifications

Product family	OMNIMATE Signal - series BL/SL 3.50	Type of connection	Board connection
Mounting onto the PCB	THT solder connection	Pitch in mm (P)	3.5 mm
Pitch in inches (P)	0.138 inch	Outgoing elbow	90°
No. of poles	18	Number of solder pins per pole	1
Solder pin length (l)	3.2 mm	Solder pin length tolerance	0 / -0.3 mm
Tolerance of solder pin position	± 0.1 mm	Solder pin dimensions	d = 1.2 mm, Octagonal
Solder pin dimensions = d tolerance	0 / -0,03 mm	Solder eyelet hole diameter (D)	1.4 mm
Solder eyelet hole diameter tolerance (D)	+ 0,1 mm	L1 in mm	28 mm
L1 in inches	1.102 inch	Number of rows	2
Pin series quantity	2	Touch-safe protection acc. to DIN VDE 57 106	Safe from back-of-hand touch
Touch-safe protection acc. to DIN VDE 0470	IP 10	Volume resistance	6.00 mΩ
Can be coded	Yes	Plugging cycles	25
Plugging force/pole, max.	10 N	Pulling force/pole, max.	8 N

Material data

Insulating material	PBT	Colour	Orange
Colour chart (similar)	RAL 2000	Insulating material group	IIIa
CTI	≥ 200	Insulation resistance	≥ 10^8 Ω
UL 94 flammability rating	V-0	Contact material	CuSn
Contact surface	tinned	Layer structure of solder connection	2-3 µm Ni / 5-7 µm Sn glossy
Storage temperature, min.	-25 °C	Storage temperature, max.	55 °C
Max. relative humidity during storage	80 %	Operating temperature, min.	-50 °C
Operating temperature, max.	100 °C	Temperature range, installation, min.	-30 °C
Temperature range, installation, max.	100 °C		

Rated data acc. to IEC

tested acc. to standard	IEC 60664-1, IEC 61984	Rated current, min. no. of poles (Tu=20°C)	10.5 A
Rated current, max. no. of poles (Tu=20°C)	8 A	Rated current, min. no. of poles (Tu=40°C)	9 A
Rated current, max. no. of poles (Tu=40°C)	7 A	Rated voltage for surge voltage class / pollution degree II/2	200 V
Rated voltage for surge voltage class / pollution degree III/2	160 V	Rated voltage for surge voltage class / pollution degree III/3	125 V
Rated impulse voltage for surge voltage class/ pollution degree II/2	2.5 kV	Rated impulse voltage for surge voltage class/ pollution degree III/2	2.5 kV
Rated impulse voltage for surge voltage class/ contamination degree III/3	2.5 kV	Short-time withstand current resistance	3 x 1s with 80 A

OMNIMATE Signal - series BL/SL 3.50
SLD 3.50/18/90F 3.2SN OR BX

Weidmüller Interface GmbH & Co. KG
Klingenbergstraße 16
D-32758 Detmold
Germany
Fon: +49 5231 14-0
Fax: +49 5231 14-292083
www.weidmueller.com

Technical data

Rated data acc. to CSA

Institute (CSA)		Certificate No. (CSA)	
			154685-1318353
Rated voltage (Use group B / CSA)	300 V	Rated voltage (Use group D / CSA)	300 V
Rated current (Use group B / CSA)	8 A	Rated current (Use group D / CSA)	8 A
Reference to approval values	Specifications are maximum values, details - see approval certificate.		

Rated data acc. to UL 1059

Institute (UR)		Certificate No. (UR)	
			E60693
Rated voltage (Use group B / UL 1059)	300 V	Rated voltage (Use group D / UL 1059)	300 V
Rated current (Use group B / UL 1059)	8 A	Rated current (Use group D / UL 1059)	8 A
Reference to approval values	Specifications are maximum values, details - see approval certificate.		

Packaging

Packaging	Box	VPE length	82 mm
VPE width	88 mm	VPE height	104 mm

Classifications

ETIM 3.0	EC001284	ETIM 4.0	EC002637
ETIM 5.0	EC002637	ETIM 6.0	EC002637
UNSPSC	30-21-18-10	eClass 5.1	27-26-07-04
eClass 6.2	27-26-07-04	eClass 7.1	27-44-04-02
eClass 8.1	27-44-04-02	eClass 9.0	27-44-04-02
eClass 9.1	27-44-04-02		

Notes

Notes	• Additional colours on request • Gold-plated contact surfaces on request • Rated current related to rated cross-section & min. No. of poles. • P on drawing = pitch • Rated data refer only to the component itself. Clearance and creepage distances to other components are to be designed in accordance with the relevant application standards.
IPC conformity	Conformity: The products are developed, manufactured and delivered according international recognized standards and norms and comply with the assured properties in the data sheet resp. fulfill decorative properties in accordance with IPC-A-610 "Class 2". Further claims on the products can be evaluated on request.

OMNIMATE Signal - series BL/SL 3.50
SLD 3.50/18/90F 3.2SN OR BX

Weidmüller Interface GmbH & Co. KG
Klingenbergstraße 16
D-32758 Detmold
Germany
Fon: +49 5231 14-0
Fax: +49 5231 14-292083
www.weidmueller.com

Technical data

Approvals

Approvals	
ROHS	Conform

Downloads

Approval/Certificate/Document of Conformity	Declaration of the Manufacturer
Brochure/Catalogue	FL DRIVES EN MB DEVICE MANUF. EN FL DRIVES DE CAT 2 PORTFOLIOGUIDE EN FL BUILDING SAFETY EN FL APPL LED LIGHTING EN FL INDUSTR.CONTROLS EN FL MACHINE SAFETY EN FL HEATING ELECTR EN FL APPL_INVERTER EN FL_BASE_STATION_EN FL ELEVATOR EN FL POWER SUPPLY EN FL 72H SAMPLE SER EN PO OMNIMATE EN
Engineering Data	SLD.zip

OMNIMATE Signal - series BL/SL 3.50
SLD 3.50/18/90F 3.2SN OR BX

Weidmüller Interface GmbH & Co. KG
Klingenbergstraße 16
D-32758 Detmold
Germany
Fon: +49 5231 14-0
Fax: +49 5231 14-292083
www.weidmueller.com

Drawings

Dimensional drawing

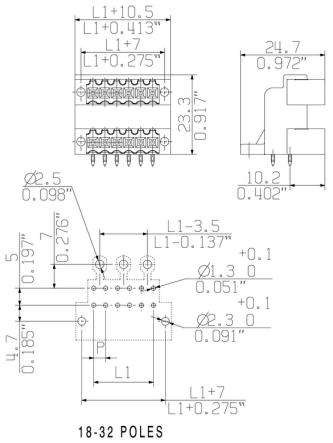

Dimensions without tolerances are no check dimensions

The English version is binding

AUSFUEHRUNG/TYPE: SLD 3.50V/../90F..

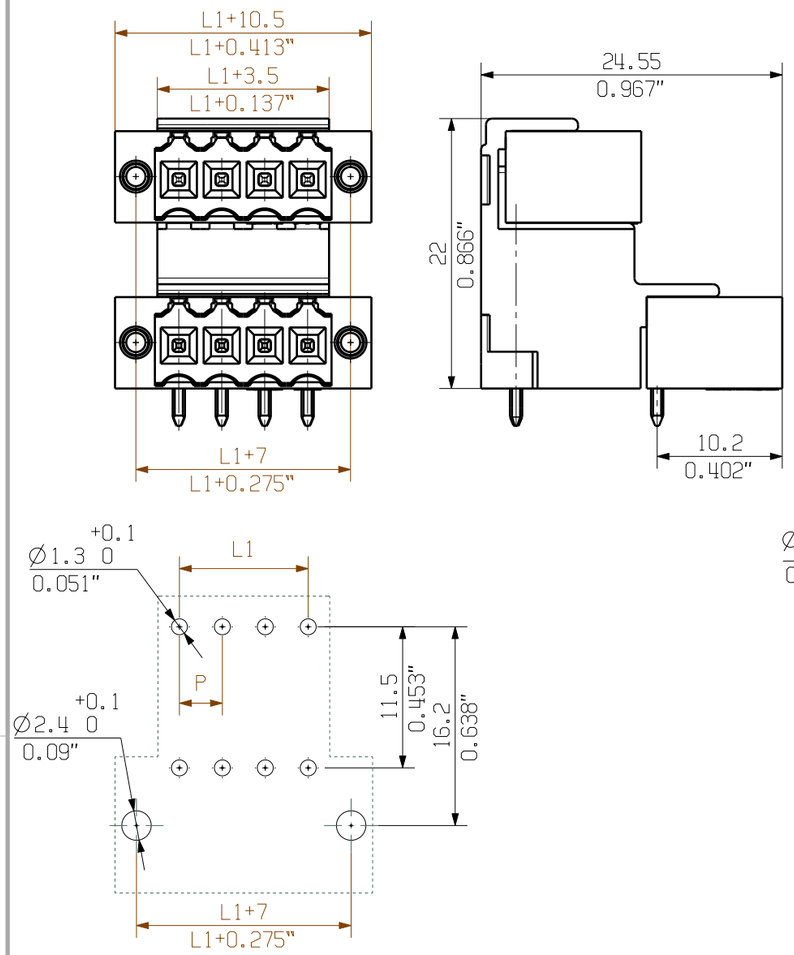

AUSFUEHRUNG/TYPE SLD 3.50V/../90..

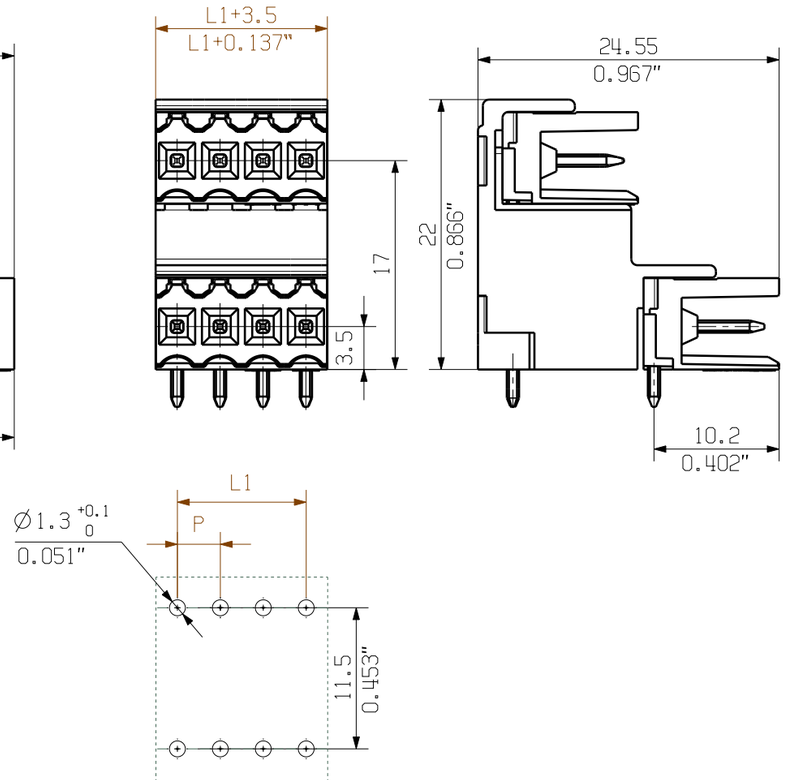

AUSFUEHRUNG/TYPE: SLD 3.50V/../90G..

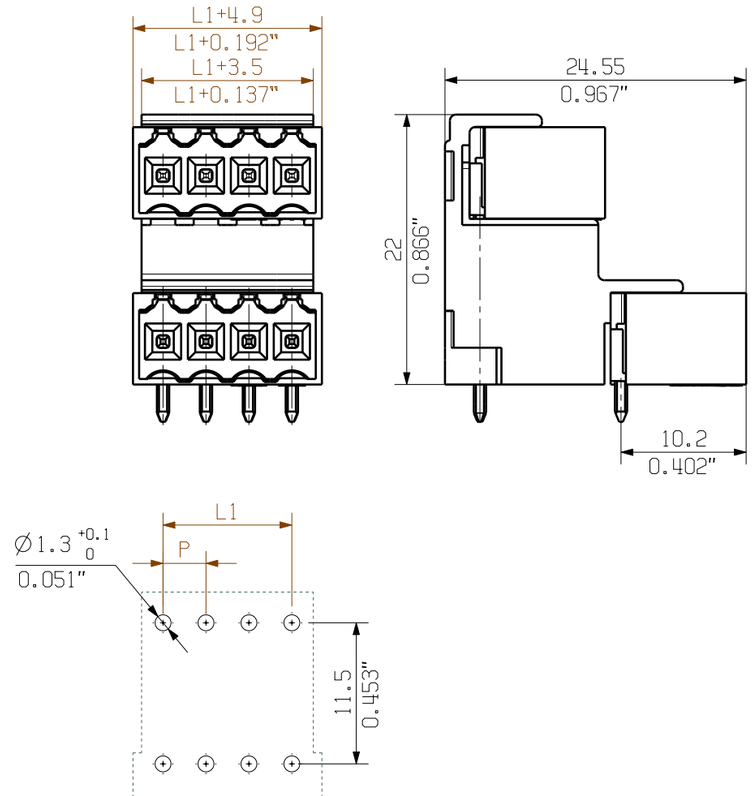

n	L	L1	L2	L3
46	80,50	77,00	81,90	87,50
42	73,50	70,00	74,90	80,50
38	66,50	63,00	67,90	73,50
34	59,50	56,00	60,90	66,50
30	52,50	49,00	53,90	59,50
26	45,50	42,00	46,90	52,50
22	38,50	35,00	39,90	45,50
18	31,50	28,00	32,90	38,50
14	24,50	21,00	25,90	31,50
10	17,50	14,00	18,90	24,50
6	10,50	7,00	11,90	17,50

For the mounting of PCBs, it should be noted that the rated data given in the catalogue relates only to the connection elements. The neccessary creepage and clearance paths must be observed in connection with the respective applicant in accordance to VDE 0110. The current-carrying capacity and pitch tolerance is to be determined according to IEC 60326 part 3 very fine.

Weidmueller connectors are tested to the DIN VDE 0627 standard, and are valid for its field of application. Provided that the connectors are used to the intended purpose, all requirements with respect to the occuring of electrical, mechanical, thermic and corrosive stress will be satisfied.

General tolerance:
DIN ISO 2768-mK

RoHS COMPLIANT

99080/5
20.10.17 HELIS_MA 06
.
Modification

. .

Cat.no.: .

Weidmüller

3 21372 (15)
Drawing no. Issue no.
Sheet 00 of 00 sheets

	Date	Name
Drawn	13.08.2004	LANG_T
Responsible		LANG_T
Checked	01.11.2017	HELIS_MA
Approved		HECKERT_M

Scale: 2:1

Supersedes: .

SLD 3.50V/../90...

STIFTLEISTE
MALE HEADER

Product file: SLD 3.50V 7302

The reproduction, distribution and utilization of this document as well as the communication of its contents to others without explicit authorization is prohibited.
Offenders will be held liable for the payment of damages. Weidmueller exclusively reserves the right to file for patents, utility models or designs.
© Weidmueller Interface GmbH & Co. KG

Recommended wave solderding profiles

Weidmüller Interface GmbH & Co. KG
Klingenbergstraße 16
D-32758 Detmold
Germany
Fon: +49 5231 14-0
Fax: +49 5231 14-292083
www.weidmueller.com

Single Wave:

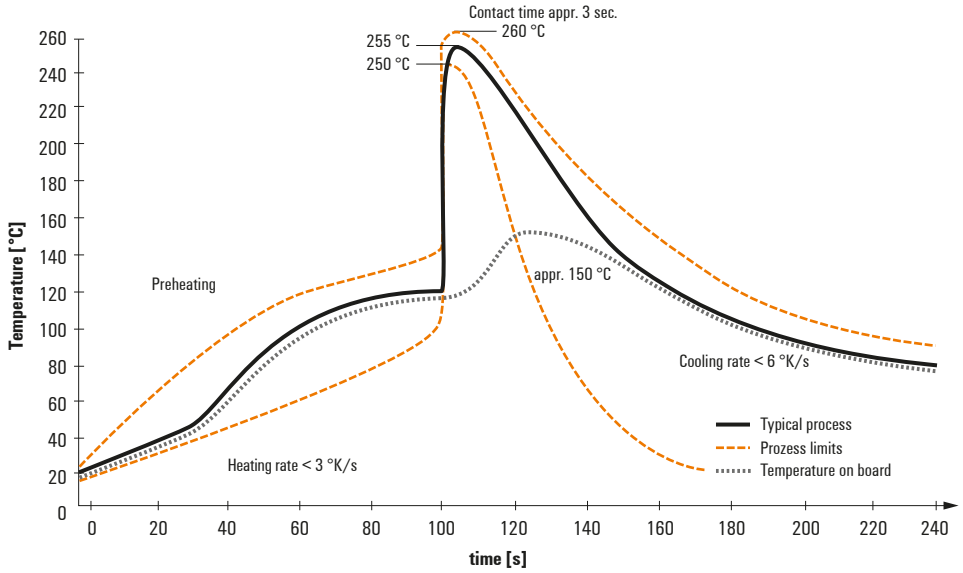

Double Wave:

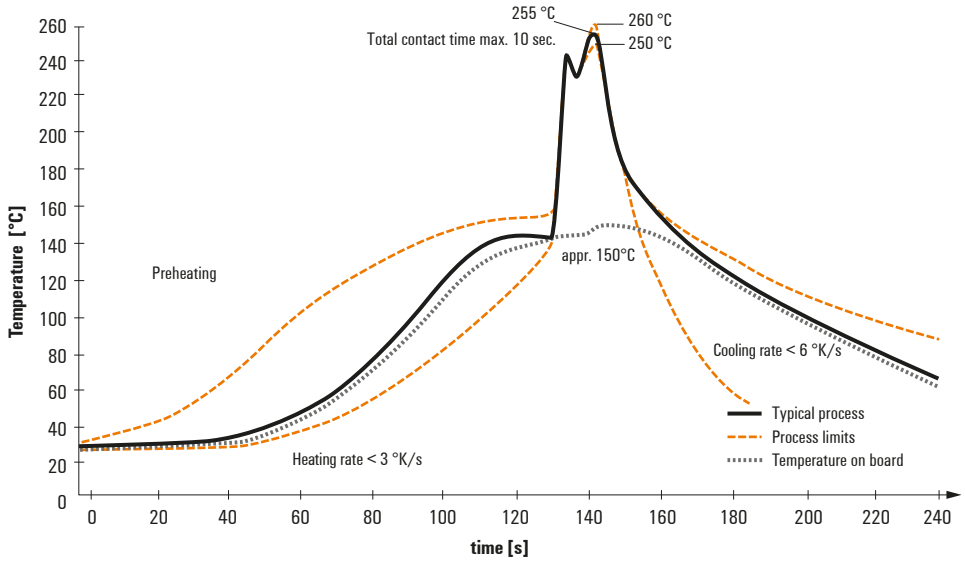

Wave soldering profiles

Wired connection elements should be processed in accordance with the DIN EN 61760-1 standard. We have included two recommendations for practical wave soldering profiles, with which Weidmüller PCB terminals and connectors are qualified.

When choosing a suitable profile for your application, the following factors also need to be considered:
- PCB thickness
- Proportion of Cu in the layers
- Single/double-sided assembly
- Product range
- Heating and cooling rates

The single and double wave profiles each indicate the recommended operating range, including the maximum soldering temperature of 260°C. In practice, the maximum soldering temperature is quite often well below the above maximum profile.

We reserve the right to make technical changes.