OMNIMATE Signal - series BL/SL 5.08
BLDF 5.08/04/180LH SN BK BX

Weidmüller Interface GmbH & Co. KG
Klingenbergstraße 26
D-32758 Detmold
Germany
Fon: +49 5231 14-0
Fax: +49 5231 14-292083
www.weidmueller.com

Product image

Similar to illustration

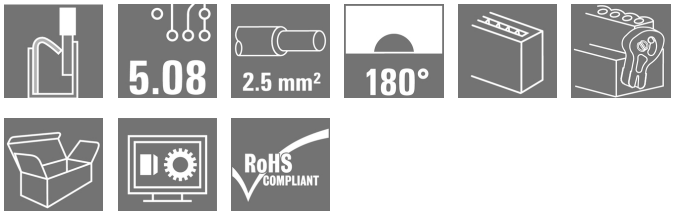

The powerful daisy-chain solution for high-performance signal bus applications is also suitable for 400V auxiliary power chains with 18.5 A current-carrying capacity.
The large clamping capacity (up to 2.5mm² wire cross-sections) is particularly beneficial for long bus cables or high currents because of the low voltage drop.
Four flange variations, including the patented release latch, so you can design the interlock based on the requirements of the user.

General ordering data

Type	BLDF 5.08/04/180LH SN BK BX
Order No.	1001100000
Version	PCB plug-in connector, female plug, 5.08 mm, Number of poles: 4, 180°, PUSH IN, Spring connection, Clamping range, max. : 3.31 mm², Box
GTIN (EAN)	4032248817924
Qty.	40 pc(s).
Product data	IEC: 400 V / 20.8 A / 0.2 - 2.5 mm² UL: 300 V / 18.5 A / AWG 12 - AWG 26
Packaging	Box

Creation date April 22, 2020 2:43:29 PM CEST

OMNIMATE Signal - series BL/SL 5.08
BLDF 5.08/04/180LH SN BK BX

Weidmüller Interface GmbH & Co. KG
Klingenbergstraße 26
D-32758 Detmold
Germany
Fon: +49 5231 14-0
Fax: +49 5231 14-292083
www.weidmueller.com

Technical data

Dimensions and weights

Width	30.12 mm	Width (inches)	1.186 inch
Height	24.7 mm	Height (inches)	0.972 inch
Depth	29.6 mm	Depth (inches)	1.165 inch
Net weight	15.55 g		

System Parameters

Product family	OMNIMATE Signal - series BL/SL 5.08	Type of connection	Field connection
Wire connection method	PUSH IN, Spring connection	Pitch in mm (P)	5.08 mm
Pitch in inches (P)	0.2 inch	Conductor outlet direction	180°
Number of poles	4	L1 in mm	15.24 mm
L1 in inches	0.6 inch	Number of rows	1
Pin series quantity	1	Rated cross-section	2.5 mm²
Touch-safe protection acc. to DIN VDE 57 106	Safe from finger touch	Touch-safe protection acc. to DIN VDE 0470	IP 20
Volume resistance	≤ 5mΩ	Can be coded	Yes
Stripping length	10 mm	Screwdriver blade	0.6 x 3.5
Screwdriver blade standard	DIN 5264	Plugging cycles	25
Plugging force/pole, max.	9.5 N	Pulling force/pole, max.	7.5 N

Material data

Insulating material	PBT	Colour	black
Colour of operational elements	orange	Material of operational elements	PBT
Colour chart (similar)	RAL 9011	Insulating material group	IIIa
Comparative Tracking Index (CTI)	≥ 200	Insulation strength	≥ 10^8 Ω
UL 94 flammability rating	V-0	GWFI	960 °C
Contact material	CuSn	Contact surface	tinned
Layer structure of plug contact	4-8 µm Sn hot-dip tinned	Storage temperature, min.	-25 °C
Storage temperature, max.	50 °C	Max. relative humidity during storage	70 %
Operating temperature, min.	-50 °C	Operating temperature, max.	100 °C
Temperature range, installation, min.	-30 °C	Temperature range, installation, max.	100 °C

Conductors suitable for connection

Clamping range, min.	0.13 mm²
Clamping range, max.	3.31 mm²
Wire connection cross section AWG, min.	AWG 26
Wire connection cross section AWG, max.	AWG 12
Solid, min. H05(07) V-U	0.2 mm²
Solid, max. H05(07) V-U	2.5 mm²
Flexible, min. H05(07) V-K	0.2 mm²
Flexible, max. H05(07) V-K	2.5 mm²
w. plastic collar ferrule, DIN 46228 pt 4, min.	0.25 mm²
w. plastic collar ferrule, DIN 46228 pt 4, max.	2.5 mm²
w. wire end ferrule, DIN 46228 pt 1, min.	0.25 mm²
w. wire end ferrule, DIN 46228 pt 1, max.	2.5 mm²

OMNIMATE Signal - series BL/SL 5.08
BLDF 5.08/04/180LH SN BK BX

Weidmüller Interface GmbH & Co. KG
Klingenbergstraße 26
D-32758 Detmold
Germany
Fon: +49 5231 14-0
Fax: +49 5231 14-292083
www.weidmueller.com

Technical data

Plug gauge in accordance with EN 60999 a x b; ø	2.8 mm x 2.0 mm			
Clampable conductor	Cross-section for conductor connection	Type	fine-wired	
		nominal	0.5 mm²	
	wire end ferrule	Stripping length	nominal	12 mm
		Recommended wire-end ferrule	H0,5/16 OR	
		Stripping length	nominal	10 mm
		Recommended wire-end ferrule	H0,5/10	
	Cross-section for conductor connection	Type	fine-wired	
		nominal	0.75 mm²	
	wire end ferrule	Stripping length	nominal	12 mm
		Recommended wire-end ferrule	H0,75/16 W	
		Stripping length	nominal	10 mm
		Recommended wire-end ferrule	H0,75/10	
	Cross-section for conductor connection	Type	fine-wired	
		nominal	1 mm²	
	wire end ferrule	Stripping length	nominal	12 mm
		Recommended wire-end ferrule	H1,0/16D R	
		Stripping length	nominal	10 mm
		Recommended wire-end ferrule	H1,0/10	
	Cross-section for conductor connection	Type	fine-wired	
		nominal	1.5 mm²	
	wire end ferrule	Stripping length	nominal	10 mm
		Recommended wire-end ferrule	H1,5/10	
		Stripping length	nominal	12 mm
		Recommended wire-end ferrule	H1,5/16 R	
	Cross-section for conductor connection	Type	fine-wired	
		nominal	2.5 mm²	
	wire end ferrule	Stripping length	nominal	10 mm
		Recommended wire-end ferrule	H2,5/10	
		Stripping length	nominal	13 mm
		Recommended wire-end ferrule	H2,5/16DS BL	
Reference text	The outside diameter of the plastic collar should not be larger than the pitch (P), Length of ferrules is to be chosen depending on the product and the rated voltage.			
Max. clamping range	3.31 mm²			

OMNIMATE Signal - series BL/SL 5.08
BLDF 5.08/04/180LH SN BK BX

Weidmüller Interface GmbH & Co. KG
Klingenbergstraße 26
D-32758 Detmold
Germany
Fon: +49 5231 14-0
Fax: +49 5231 14-292083
www.weidmueller.com

Technical data

Rated data acc. to IEC

tested acc. to standard	IEC 60664-1, IEC 61984	Rated current, min. number of poles (Tu=20°C)	20.8 A
Rated current, max. number of poles (Tu=20°C)	17.4 A	Rated current, min. number of poles (Tu=40°C)	17.9 A
Rated current, max. number of poles (Tu=40°C)	14.9 A	Rated current cross-connector, min. number of poles (Ta=20°C)	28.1 A
Rated current cross-connector, max. number of poles (Ta=20°C)	23.3 A	Rated current cross-connector, min. number of poles (Ta=40°C)	24.2 A
Rated current cross-connector, max. number of poles (Ta=40°C)	19.9 A	Rated voltage for surge voltage class / pollution degree II/2	400 V
Rated voltage for surge voltage class / pollution degree III/2	320 V	Rated voltage for surge voltage class / pollution degree III/3	250 V
Rated impulse voltage for surge voltage class/ pollution degree II/2	4 kV	Rated impulse voltage for surge voltage class/ pollution degree III/2	4 kV
Rated impulse voltage for surge voltage class/ contamination degree III/3	4 kV	Short-time withstand current resistance	3 x 1s with 120 A

Rated data acc. to CSA

Institute (CSA)		Certificate No. (CSA)	200039-1121690
Rated voltage (Use group B / CSA)	300 V	Rated voltage (Use group D / CSA)	300 V
Rated current (Use group B / CSA)	18.5 A	Rated current (Use group D / CSA)	10 A
Wire cross-section, AWG, min.	AWG 12	Wire cross-section, AWG, max.	AWG 26
Reference to approval values	Specifications are maximum values, details - see approval certificate.		

Rated data acc. to UL 1059

Institute (cURus)		Certificate No. (cURus)	E60693
Rated voltage (Use group B / UL 1059)	300 V	Rated voltage (Use group D / UL 1059)	300 V
Rated current (Use group B / UL 1059)	18.5 A	Rated current (Use group D / UL 1059)	10 A
Wire cross-section, AWG, min.	AWG 12	Wire cross-section, AWG, max.	AWG 26
Reference to approval values	Specifications are maximum values, details - see approval certificate.		

Packing

Packaging	Box	VPE length	35 mm
VPE width	135 mm	VPE height	350 mm

Cross-connector rated data according to DIN IEC

Rated current cross-connector, min. number of poles (Ta=20°C)	28.1 A	Rated current cross-connector, max. number of poles (Ta=20°C)	23.3 A
Rated current cross-connector, min. number of poles (Ta=40°C)	24.2 A	Rated current cross-connector, max. number of poles (Ta=40°C)	19.9 A

OMNIMATE Signal - series BL/SL 5.08
BLDF 5.08/04/180LH SN BK BX

Weidmüller Interface GmbH & Co. KG
Klingenbergstraße 26
D-32758 Detmold
Germany
Fon: +49 5231 14-0
Fax: +49 5231 14-292083
www.weidmueller.com

Technical data

Classifications

ETIM 6.0	EC002638	ETIM 7.0	EC002638
eClass 9.0	27-44-03-09	eClass 9.1	27-44-03-09
eClass 10.0	27-44-03-09		

Notes

Notes	• Additional colours on request • Gold-plated contact surfaces on request • Rated current related to rated cross-section & min. No. of poles. • Wire end ferrule without plastic collar to DIN 46228/1 • Wire end ferrule with plastic collar to DIN 46228/4 • P on drawing = pitch • Crimping shape "A" for wire end ferrules with PZ 6/5 crimping tool recommended. • The test point can only be used as potential-pickup point.
IPC conformity	Conformity: The products are developed, manufactured and delivered according international recognized standards and norms and comply with the assured properties in the data sheet resp. fulfill decorative properties in accordance with IPC-A-610 "Class 2". Further claims on the products can be evaluated on request.

Approvals

Approvals	
ROHS	Conform

Downloads

Approval/Certificate/Document of Conformity	Declaration of the Manufacturer
Brochure/Catalogue	FL DRIVES EN MB DEVICE MANUF. EN FL DRIVES DE FL BUILDING SAFETY EN FL APPL LED LIGHTING EN FL INDUSTR.CONTROLS EN FL MACHINE SAFETY EN FL HEATING ELECTR EN FL APPL_INVERTER EN FL_BASE_STATION_EN FL ELEVATOR EN FL POWER SUPPLY EN FL 72H SAMPLE SER EN PO OMNIMATE EN
Engineering Data	WSCAD
Engineering Data	STEP
White paper PUSH IN wire connection	Download Whitepaper

OMNIMATE Signal - series BL/SL 5.08
BLDF 5.08/04/180LH SN BK BX

Weidmüller Interface GmbH & Co. KG
Klingenbergstraße 26
D-32758 Detmold
Germany
Fon: +49 5231 14-0
Fax: +49 5231 14-292083
www.weidmueller.com

Drawings

Dimensional drawing

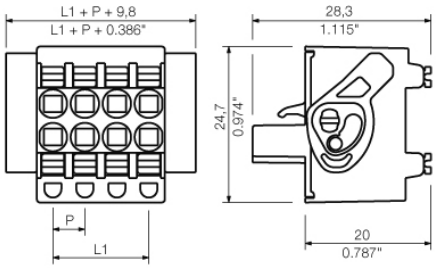

Graph

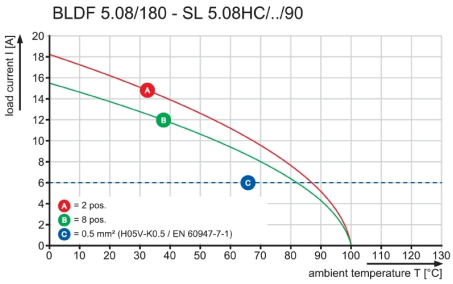

Graph

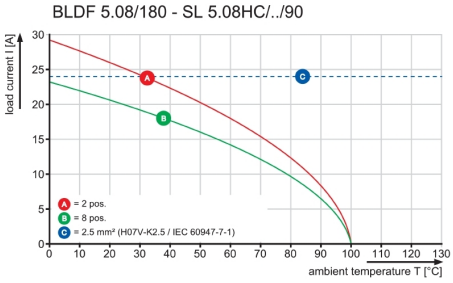

Graph

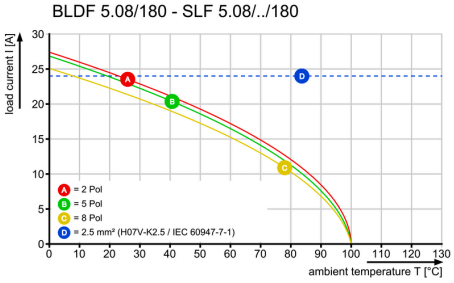

Product benefits

Solid PUSH IN contact
Safe and durable

Product benefits

Cost-effective wiring
Quick and intuitive operation

OMNIMATE Signal - series BL/SL 5.08
BLDF 5.08/04/180LH SN BK BX

Weidmüller Interface GmbH & Co. KG
Klingenbergstraße 26
D-32758 Detmold
Germany
Fon: +49 5231 14-0
Fax: +49 5231 14-292083
www.weidmueller.com

Drawings

Product benefits

Wide clamping range
Tool-free wire connection

Dimensions without tolerances are no check dimensions

The English version is binding

SHOWN: BLDF 5.08/04/180 G

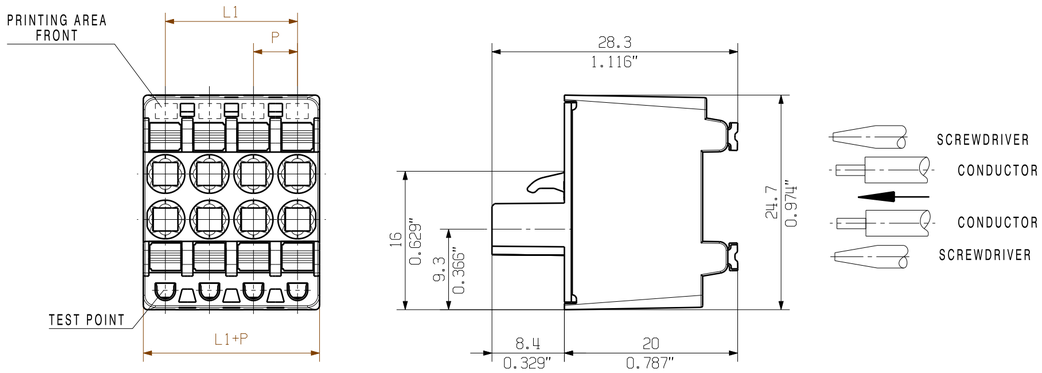

SHOWN: BLDF 5.08/04/180 F

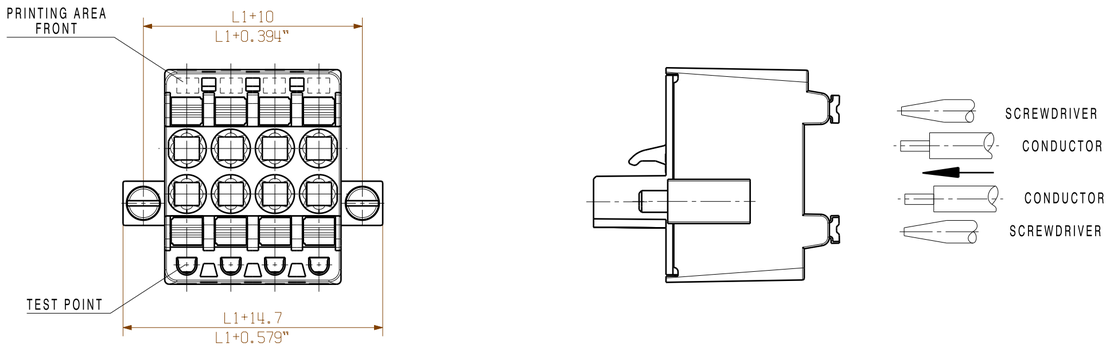

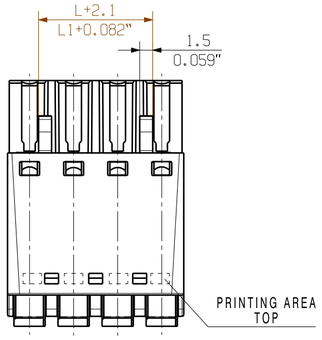

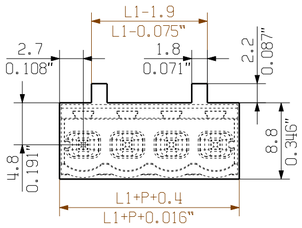

MIN. FRONT PLATE CUT-OUT

M 1/1

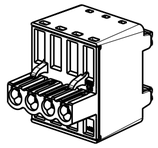

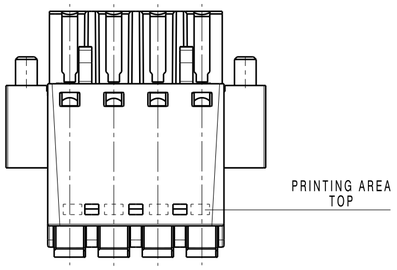

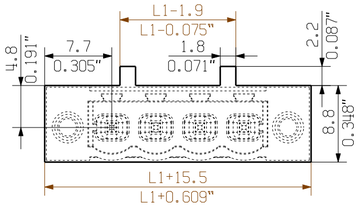

FRONT PLATE CUT-OUT

M 1/1

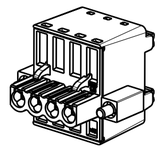

PRINTING AREA
FRONT

SHOWN: BLDF 5.08/04/180 LR

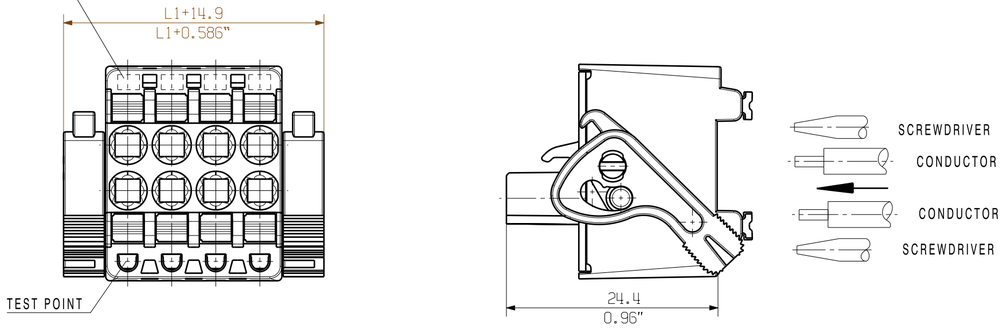

SHOWN: BLDF 5.08/04/180 LH

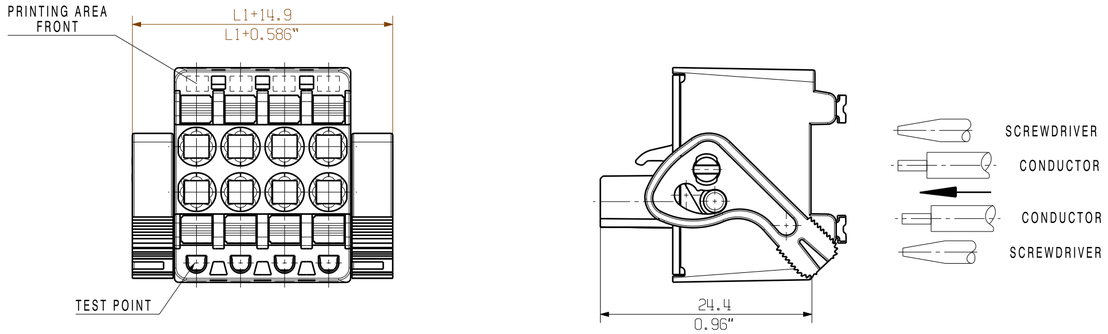

M 1/1

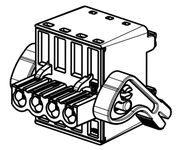

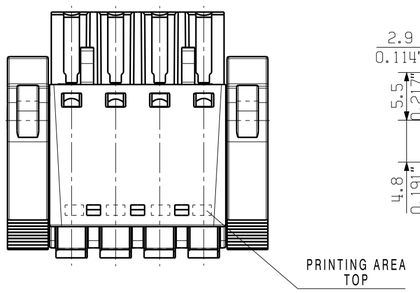

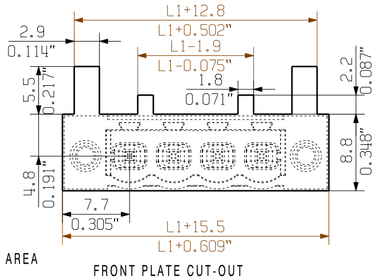

FRONT PLATE CUT-OUT

M 1/1

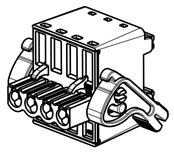

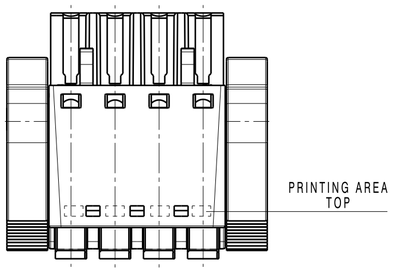

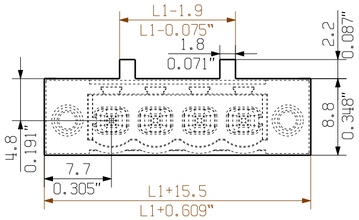

FRONT PLATE CUT-OUT

P=5.08 RASTER PITCH

POLZAHL POLES n	MASS L1 DIM. [mm]	MASS L1 DIM. [Inch]
8	35.56	1.400
7	30.48	1.200
6	25.40	1.000
5	20.32	0.800
4	15.24	0.600
3	10.16	0.400
2	5.08	0.200

For the mounting of PCBs, it should be noted that the rated data given in the catalogue relates only to the connection elements. The neccessary creepage and clearance paths must be observed in connection with the respective applicant in accordance to VDE 0110. The current-carrying capacity and pitch tolerance is to be determined according to DIN IEC 326 part 3 very fine.

Weidmüller connectors are tested to the DIN VDE 0627 standard, and are valid for its field of application. Provided that the connectors are used to the intended purpose, all requirements with respect to the occuring of electrical, mechanical, thermic and corrosive stress will be satisfied.

ALLGEMEINGUELTIGE KUNDENZEICHNUNG, AKTUELLER STAND NUR AUF ANFRAGE
GENERAL CUSTOMER DRAWING, TOPICAL VERSION ONLY IF REQUIRED

GENERAL TOLERANCE:
DIN ISO 2768-m

RoHS COMPLIANT	EC00002032	Prim PLM Part No.: 002876	Prim ERP Part No.: 1001170000
	First Issue Date 01.03.2010	Max. nos. / Modification	Weidmüller — Drawing no. 47786 — Issue no. 6 — Sheet 02 of 02 sheets
		Drawn: 22.07.2019 Helis, Maria	BLDF 5.08/.../180... BUCHSENLEISTE SOCKET BLOCK
		Responsible: Hertel, Suzann	
Scale: 2:1	Size: A2	Approved: 31.07.2019 Hertel, Suzann	
Drawings Assembly			Product file: 7379 BLF 5.08 180

The reproduction, distribution and utilization of this document as well as the communication of its contents to others without explicit authorization is prohibited. Offenders will be held liable for the payment of damages. Weidmueller exclusively reserves the right to file for patents, utility models or designs.
© Weidmueller Interface GmbH & Co. KG