Data Sheet | Item Number: 257-402/333-000

PCB terminal block; finger-operated levers; 2.5 mm²; Pin spacing 5/5.08 mm; 2-pole; CAGE CLAMP®; commoning option; gray

https://www.wago.com/257-402/333-000

Color: gray

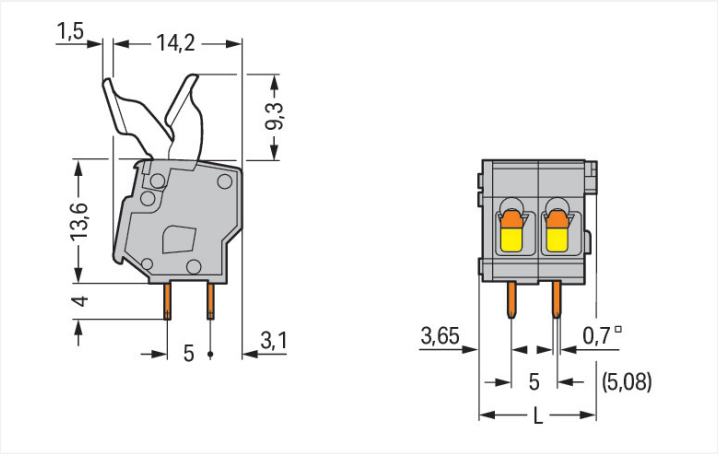

Dimensions in mm

L = (pole no. x pin spacing) + 2.9 mm

For lengths greater than three poles, finger lever operation for center levers may not be possible due to finger size/spacing limitations.

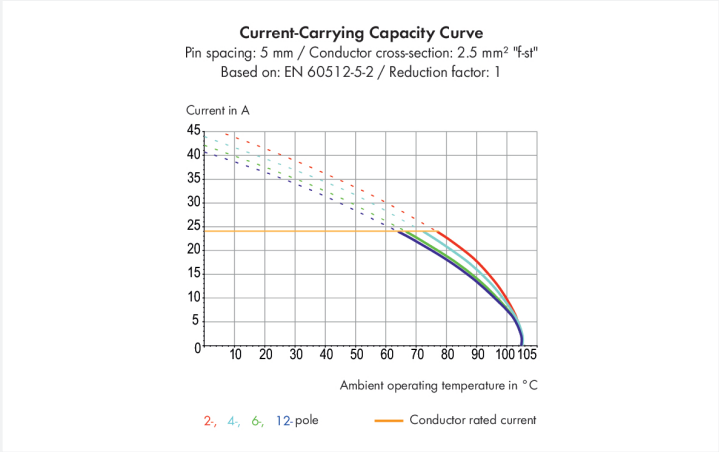

PCB terminal block, 257 Series, finger-operated lever

Our PCB terminal block (item number 257-402/333-000) makes connecting wires quick and easy. You can count on proven safety with these PCB terminal blocks, perfect for a wide range of applications when designing your devices. Rated current and voltage are key factors to consider when choosing a PCB terminal block, as they indicate possible applications and uses. This product has a rated voltage of 320 V and a rated current of 24 A, making it suitable for high-load applications. Strip lengths must be between 5 mm and 6 mm when connecting conductors to this PCB terminal block. This product features one conductor terminal and utilizes CAGE CLAMP®. Our reliable and maintenance-free CAGE CLAMP® connection makes it easy to connect all types of conductors without having to prepare the conductor. For example, you don't need to crimp ferrules. The item's dimensions are 12.9 x 26.9 x 15.7 mm (width x height x depth). This PCB terminal block is suitable for conductor cross sections ranging from 0.08 mm² to 2.5 mm². Up to two potentials / two poles can be connected to this terminal strip using two clamping points on one level. The gray housing is made of polyamide (PA66) for insulation, the contacts are made of electrolytic copper (ECu), and the clamping spring is made of chrome-nickel spring steel (CrNi). The contact surface is coated with tin. Finger-operated lever is used to operate this PCB terminal block. THT is used to solder the PCB terminal block. Insert the conductor at a 0° angle.. The solder pins measure 0.7 x 0.7 mm in cross-section and 4 mm in length and are organized over the entire terminal strip (in-line). There are two solder pins per potential.

Notes

Variants:	Other pole numbers Versions for Ex e II and Ex i Other colors Mixed-color PCB connector strips Direct marking Other versions (or variants) can be requested from WAGO Sales or configured at https://configurator.wago.com/.

Electrical data

Ratings per	IEC/EN 60664-1		
Overvoltage category	III	III	II
Pollution degree	3	2	2
Nominal voltage	250 V	320 V	630 V
Rated surge voltage	4 kV	4 kV	4 kV
Rated current	24 A	24 A	24 A

Approvals per	UL 1059		
Use group	B	C	D
Rated voltage	300 V	-	300 V
Rated current	15 A	-	10 A

Approvals per	CSA		
Use group	B	C	D
Rated voltage	300 V	-	300 V
Rated current	15 A	-	10 A

Connection data

Clamping units	2
Total number of potentials	2
Number of connection types	1
Number of levels	1

Connection 1	
Connection technology	CAGE CLAMP®
Actuation type	Finger-operated lever
Solid conductor	0.08 … 2.5 mm² / 28 … 12 AWG
Fine-stranded conductor	0.08 … 2.5 mm² / 28 … 12 AWG
Fine-stranded conductor; with insulated ferrule	0.25 … 1.5 mm²
Fine-stranded conductor; with uninsulated ferrule	0.25 … 1.5 mm²
Note (conductor cross-section)	12 AWG: THHN, THWN
Strip length	5 … 6 mm / 0.2 … 0.24 inches
Conductor connection direction to PCB	0 °
Pole number	2

Physical data

Pin spacing	5/5.08 mm / 0.197/0.2 inches
Width	12.9 mm / 0.508 inches
Height	26.9 mm / 1.059 inches
Height from the surface	22.9 mm / 0.902 inches
Depth	15.7 mm / 0.618 inches
Solder pin length	4 mm
Solder pin dimensions	0.7 x 0.7 mm
Drilled hole diameter with tolerance	1.1 $^{(+0.1)}$ mm

 Continued on next page

PCB contact

PCB contact	THT
Solder pin arrangement	over the entire terminal strip (in-line)
Number of solder pins per potential	2

Material data

Note (material data)	Information on material specifications can be found here
Color	gray
Material group	I
Insulation material (main housing)	Polyamide (PA66)
Flammability class per UL94	V0
Clamping spring material	Chrome-nickel spring steel (CrNi)
Contact material	Electrolytic copper (E_{Cu})
Contact Plating	Tin
Fire load	0.065 MJ
Weight	2.5 g

Environmental requirements

Limit temperature range	-60 … +105 °C

Commercial data

Product Group	4 (Printed Circuit Connectors)
PU (SPU)	400 (100) pcs
Packaging type	Box
Country of origin	PL
GTIN	4044918675765
Customs tariff number	85369010000

Product Classification

UNSPSC	39121409
eCl@ss 10.0	27-44-04-01
eCl@ss 9.0	27-44-04-01
ETIM 9.0	EC002643
ETIM 8.0	EC002643
ECCN	NO US CLASSIFICATION

Environmental Product Compliance

RoHS Compliance Status	Compliant,No Exemption

 Continued on next page

Downloads

Environmental Product Compliance

Compliance Search

Environmental Product Compliance 257-402/333-000

Documentation

Additional Information

Technical Section	03.04.2019	pdf 2027.26 KB	
Gebrückte Klemmenleisten für Leiterplatten		pdf 303.71 KB	

CAD/CAE-Data

CAD data

2D/3D Models 257-402/333-000

CAE data

EPLAN Data Portal 257-402/333-000

ZUKEN Portal 257-402/333-000

PCB Design

Symbol and Footprint via SamacSys 257-402/333-000

Symbol and Footprint via Ultra Librarian 257-402/333-000

1 Compatible Products

1.1 Optional Accessories

1.1.1 Ferrule

1.1.1.1 Ferrule

Item No.: 216-301
Ferrule; Sleeve for 0.25 mm² / AWG 24; insulated; electro-tin plated; yellow

Item No.: 216-321
Ferrule; Sleeve for 0.25 mm² / AWG 24; insulated; electro-tin plated; yellow

Item No.: 216-151
Ferrule; Sleeve for 0.25 mm² / AWG 24; uninsulated; electro-tin plated

Item No.: 216-131
Ferrule; Sleeve for 0.25 mm² / AWG 24; uninsulated; electro-tin plated; silver-colored

Item No.: 216-302
Ferrule; Sleeve for 0.34 mm² / 22 AWG; insulated; electro-tin plated; light turquoise

Item No.: 216-322
Ferrule; Sleeve for 0.34 mm² / 22 AWG; insulated; electro-tin plated; light turquoise

Item No.: 216-132
Ferrule; Sleeve for 0.34 mm² / AWG 24; uninsulated; electro-tin plated

Item No.: 216-152
Ferrule; Sleeve for 0.34 mm² / AWG 24; uninsulated; electro-tin plated

Item No.: 216-201
Ferrule; Sleeve for 0.5 mm² / 20 AWG; insulated; electro-tin plated; electrolytic copper; acc. to DIN 46228, Part 4/09.90; white

Item No.: 216-241
Ferrule; Sleeve for 0.5 mm² / 20 AWG; insulated; electro-tin plated; electrolytic copper; gastight crimped; acc. to DIN 46228, Part 4/09.90; white

Item No.: 216-221
Ferrule; Sleeve for 0.5 mm² / 20 AWG; insulated; electro-tin plated; white

Item No.: 216-141
Ferrule; Sleeve for 0.5 mm² / 20 AWG; uninsulated; electro-tin plated; electrolytic copper; gastight crimped; acc. to DIN 46228, Part 1/08.92

 Continued on next page

1.1.1.1 Ferrule

Item No.: 216-101
Ferrule; Sleeve for 0.5 mm² / AWG 22; uninsulated; electro-tin plated; silver-colored

Item No.: 216-121
Ferrule; Sleeve for 0.5 mm² / AWG 22; uninsulated; electro-tin plated; silver-colored

Item No.: 216-242
Ferrule; Sleeve for 0.75 mm² / 18 AWG; insulated; electro-tin plated; electrolytic copper; gastight crimped; acc. to DIN 46228, Part 4/09.90; gray

Item No.: 216-262
Ferrule; Sleeve for 0.75 mm² / 18 AWG; insulated; electro-tin plated; electrolytic copper; gastight crimped; acc. to DIN 46228, Part 4/09.90; gray

Item No.: 216-202
Ferrule; Sleeve for 0.75 mm² / 18 AWG; insulated; electro-tin plated; gray

Item No.: 216-222
Ferrule; Sleeve for 0.75 mm² / 18 AWG; insulated; electro-tin plated; gray

Item No.: 216-142
Ferrule; Sleeve for 0.75 mm² / 18 AWG; uninsulated; electro-tin plated; electrolytic copper; gastight crimped; acc. to DIN 46228, Part 1/08.92

Item No.: 216-102
Ferrule; Sleeve for 0.75 mm² / AWG 20; uninsulated; electro-tin plated; silver-colored

Item No.: 216-122
Ferrule; Sleeve for 0.75 mm² / AWG 20; uninsulated; electro-tin plated; silver-colored

Item No.: 216-243
Ferrule; Sleeve for 1 mm² / AWG 18; insulated; electro-tin plated; electrolytic copper; gastight crimped; acc. to DIN 46228, Part 4/09.90; red

Item No.: 216-263
Ferrule; Sleeve for 1 mm² / AWG 18; insulated; electro-tin plated; electrolytic copper; gastight crimped; acc. to DIN 46228, Part 4/09.90; red

Item No.: 216-203
Ferrule; Sleeve for 1 mm² / AWG 18; insulated; electro-tin plated; red

Item No.: 216-223
Ferrule; Sleeve for 1 mm² / AWG 18; insulated; electro-tin plated; red

Item No.: 216-103
Ferrule; Sleeve for 1 mm² / AWG 18; uninsulated; electro-tin plated

Item No.: 216-143
Ferrule; Sleeve for 1 mm² / AWG 18; uninsulated; electro-tin plated; electrolytic copper; gastight crimped; acc. to DIN 46228, Part 1/08.92

Item No.: 216-123
Ferrule; Sleeve for 1 mm² / AWG 18; uninsulated; electro-tin plated; silver-colored

Item No.: 216-204
Ferrule; Sleeve for 1.5 mm² / AWG 16; insulated; electro-tin plated; black

Item No.: 216-224
Ferrule; Sleeve for 1.5 mm² / AWG 16; insulated; electro-tin plated; black

Item No.: 216-244
Ferrule; Sleeve for 1.5 mm² / AWG 16; insulated; electro-tin plated; electrolytic copper; gastight crimped; acc. to DIN 46228, Part 4/09.90; black

Item No.: 216-264
Ferrule; Sleeve for 1.5 mm² / AWG 16; insulated; electro-tin plated; electrolytic copper; gastight crimped; acc. to DIN 46228, Part 4/09.90; black

Item No.: 216-284
Ferrule; Sleeve for 1.5 mm² / AWG 16; insulated; electro-tin plated; electrolytic copper; gastight crimped; acc. to DIN 46228, Part 4/09.90; black

Item No.: 216-124
Ferrule; Sleeve for 1.5 mm² / AWG 16; uninsulated; electro-tin plated

Item No.: 216-144
Ferrule; Sleeve for 1.5 mm² / AWG 16; uninsulated; electro-tin plated; electrolytic copper; gastight crimped; acc. to DIN 46228, Part 1/08.92; silver-colored

Item No.: 216-104
Ferrule; Sleeve for 1.5 mm² / AWG 16; uninsulated; electro-tin plated; silver-colored

1.1.2 Marking

1.1.2.1 Marking strip

Item No.: 210-332/500-202
Marking strips; as a DIN A4 sheet; MARKED; 1-16 (160x); Height of marker strip: 3 mm; Strip length 182 mm; Horizontal marking; Self-adhesive; white

Item No.: 210-332/508-202
Marking strips; as a DIN A4 sheet; MARKED; 1-16 (160x); Height of marker strip: 3 mm; Strip length 182 mm; Horizontal marking; Self-adhesive; white

Item No.: 210-332/500-205
Marking strips; as a DIN A4 sheet; MARKED; 1-32 (80x); Height of marker strip: 3 mm; Strip length 182 mm; Horizontal marking; Self-adhesive; white

Item No.: 210-332/508-205
Marking strips; as a DIN A4 sheet; MARKED; 1-32 (80x); Height of marker strip: 3 mm; Strip length 182 mm; Horizontal marking; Self-adhesive; white

Item No.: 210-332/500-204
Marking strips; as a DIN A4 sheet; MARKED; 17-32 (160x); Height of marker strip: 3 mm; Strip length 182 mm; Horizontal marking; Self-adhesive; white

Item No.: 210-332/508-204
Marking strips; as a DIN A4 sheet; MARKED; 17-32 (160x); Height of marker strip: 3 mm; Strip length 182 mm; Horizontal marking; Self-adhesive; white

Item No.: 210-332/500-206
Marking strips; as a DIN A4 sheet; MARKED; 33-48 (160x); Height of marker strip: 3 mm; Strip length 182 mm; Horizontal marking; Self-adhesive; white

Item No.: 210-332/508-206
Marking strips; as a DIN A4 sheet; MARKED; 33-48 (160x); Height of marker strip: 3 mm; Strip length 182 mm; Horizontal marking; Self-adhesive; white

 Continued on next page

1.1.3 Test and measurement

1.1.3.1 Testing accessories

Item No.: 249-110
Test plug adapter; suitable for 255, 256, 257 Series PCB terminal blocks; 1-pole; Pin spacing 5 mm / 0.197 in; gray

Item No.: 249-111
Test plug adapter; suitable for 255, 256, 257 Series PCB terminal blocks; 1-pole; Pin spacing 5.08 mm / 0.2 in; orange

Installation Notes

Conductor termination

Inserting/removing a conductor – 256 Series.

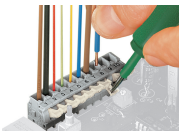

Inserting/removing a conductor (255 Series)

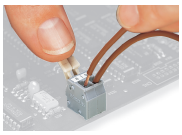

Inserting/removing a conductor via finger-operated lever – 255 Series.

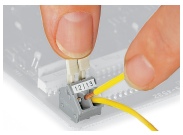

Inserting/removing a conductor via finger-operated lever – 256 Series.

Installation

Possible conductor arrangement with terminal strips staggered (for 256 Series only).

Marking

Formation of groups using housings of different colors

Testing

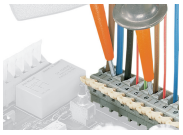

Testing with test probes.

Testing with test plug modules.