IEC Appliance Inlet C14 with Fuseholder 1- or 2-pole for PCB

Order required accessories separately

Screw-on mounting

Snap-in version
from front side
Snap-in version

C14

70° C

See below:
Approvals and Compliances

Description

- Panel mount :
  Screw-on version from front or rear side, snap-in version from front side
- 2 Functions :
  Appliance Inlet Protection class I , Fuseholder for fuse-links 5 x 20 mm 1- or 2-pole
- V-Lock notch standard
- Meets the requirements of IEC 60335-1 for appliances in unattended use. This includes the enhanced requirements of glow wire tests acc. to IEC 60695-2-11 or -12 &-13.
- For PCB mounting

Unique Selling Proposition

- Very compact design
- Components internally wired
- V-Lock cord retaining
- Suitable in medical applications

Characteristics

- All single elements are already wired
- Plug removal necessary for fuse-link replacement
- Suitable for use in equipment according to IEC/UL 60950

Other versions on request

- With solder terminals
- For protection class II

Weblinks

pdf data sheet, html datasheet, General Product Information, Distributor-Stock-Check, Accessories, Detailed request for product, Landing Page

Technical Data

Ratings IEC	10 A / 250 VAC; 50 Hz
Ratings UL/CSA	10 A / 250 VAC; 60 Hz
Dielectric Strength	> 3 kVAC between L-N > 4 kVAC between L/N-PE (1 min/50 Hz)
Allowable Operation Temperature	-25 °C to 70 °C
IP-Protection	from front side IP40 acc. to IEC 60529
Protection against electric shock	Suitable for appliances with protection class I acc. to IEC 61140
Terminal	For PCB 1,6 mm
Panel Thickness S	Screw: max 8 mm Mounting screw torque max 0.5 Nm Snap-in: 1.5/2/2.5 mm
Material: Housing	Thermoplastic, black, UL 94V-0

appliance inlet/-outlet	C14 / C18 acc. to IEC 60320-1, UL 498, CSA C22.2 no. 42 (for cold conditions) pin-temperature 70 °C, 10 A, Protection Class I
Fuseholder	1 or 2 pole, Shocksafe category PC2 acc. to IEC 60127-6, for fuse-links 5 x 20 mm
Rated Power Acceptance @ Ta 23 °C	5 x 20: 2 W (1 pole)/ 1.6 W (2-pole) per pole
Power Acceptance @ Ta > 23°C	Admissible power acceptance at higher ambient temperature see derating curves

Approvals and Compliances

Detailed information on product approvals, code requirements, usage instructions and detailed test conditions can be looked up in Details about Approvals

SCHURTER products are designed for use in industrial environments. They have approvals from independent testing bodies according to national and international standards. Products with specific characteristics and requirements such as required in the automotive sector according to IATF 16949, medical technology according to ISO 13485 or in the aerospace industry can be offered exclusively with customer-specific, individual agreements by SCHURTER.

Approvals

The approval mark is used by the testing authorities to certify compliance with the safety requirements placed on electronic products.

Approval Reference Type: KEA

Approval Logo	Certificates	Certification Body	Description
10	VDE Approvals	VDE	Certificate Number: 40046508
c US	UL Approvals	UL	UL File Number: E93617
	CCC Approvals	CCC	CCC Certificate Number: 2017180204004083

Product standards

Product standards that are referenced

Organization	Design	Standard	Description
IEC	Designed according to	IEC 60320-1	Appliance couplers for household and similar general purposes
IEC	Designed according to	IEC 60127-6	Miniature fuses. Part 6. Fuse-holders for miniature fuse-links
IEC	Designed according to	IEC 61058-1	Switches for appliances. Part 1. General requirements
UL	Designed according to	UL 498	Standard for Attachment Plugs and Receptacles
CSA Group	Designed according to	CSA C22.2 no. 42	General Use Receptacles, Attachment Plugs, and Similar Wiring Devices

Application standards

Application standards where the product can be used

Organization	Design	Standard	Description
IEC	Designed for applications acc.	IEC/UL 60950	IEC 60950-1 includes the basic requirements for the safety of information technology equipment.
IEC	Designed for applications acc.	IEC 60601-1	Medical electrical equipment - Part 1: General requirements for basic safety and essential performance
IEC	Designed for applications acc.	IEC 60335-1	Safety of electrical appliances for household and similar purposes. Meets the requirements for appliances in unattended use. This includes the enhanced requirements of glow wire tests acc. to IEC 60695-2-11 or -12 & -13.

Compliances

The product complies with following Guide Lines

Identification	Details	Initiator	Description
CE	CE declaration of conformity	SCHURTER AG	The CE marking declares that the product complies with the applicable requirements laid down in the harmonisation of Community legislation on its affixing in accordance with EU Regulation 765/2008.
RoHS	RoHS	SCHURTER AG	Directive RoHS 2011/65/EU, Amendment (EU) 2015/863
	China RoHS	SCHURTER AG	The law SJ / T 11363-2006 (China RoHS) has been in force since 1 March 2007. It is similar to the EU directive RoHS.
REACH	REACH	SCHURTER AG	On 1 June 2007, Regulation (EC) No 1907/2006 on the Registration, Evaluation, Authorization and Restriction of Chemicals 1 (abbreviated as "REACH") entered into force.
V-Lock	Landing Page V-Lock	SCHURTER AG	V-Lock system are based on a matching plug-dose combination. The connector is equipped with a notch intended for use with the latching cordset. The cord latching system prevents against accidental removal of the cordset.
	White Paper Glow wire test	SCHURTER AG	Meets the requirements of IEC 60335-1 for appliances in unattended use. This includes the enhanced requirements of glow wire tests acc. to IEC 60695-2-11 or -12 &-13.
	Medical Technology	SCHURTER AG	Suitable for use in medical equipment according to IEC/UL 60601-1

Dimensions [mm]

Screw-on mounting type KEA-PRINT

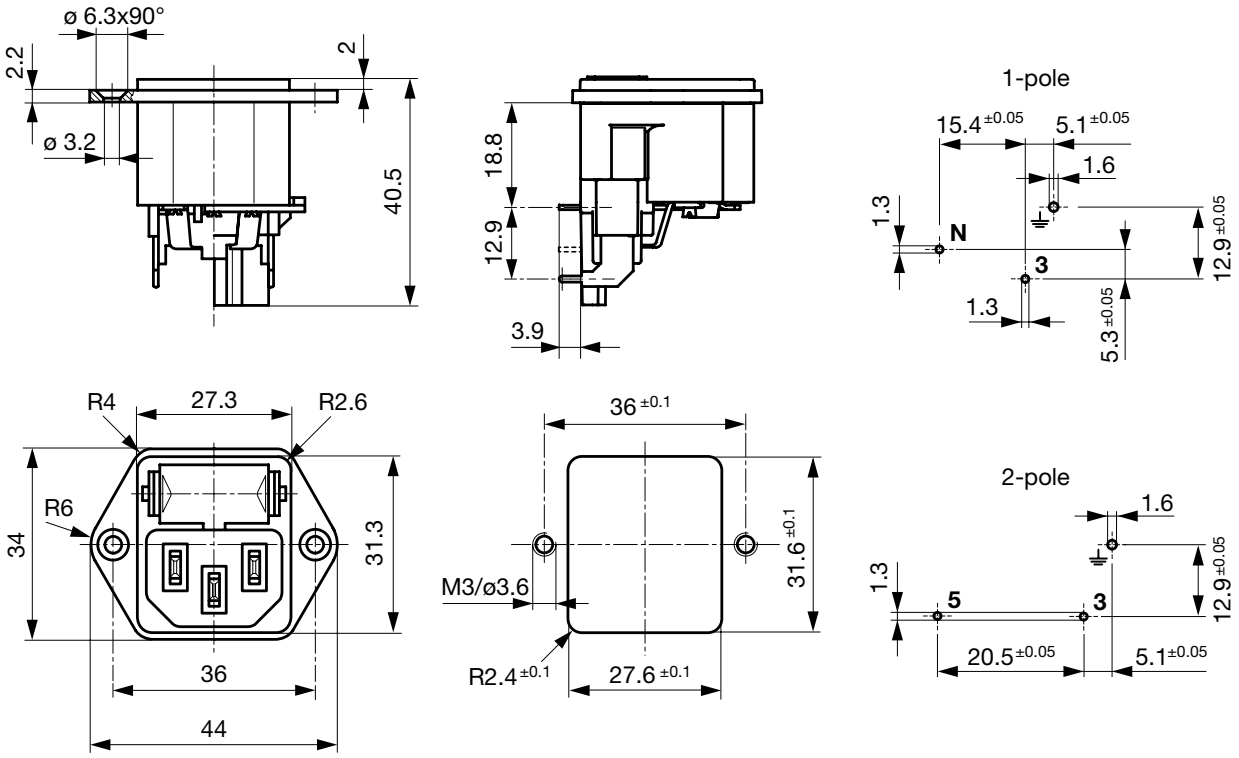

Snap-in mounting type KEA-PRINT

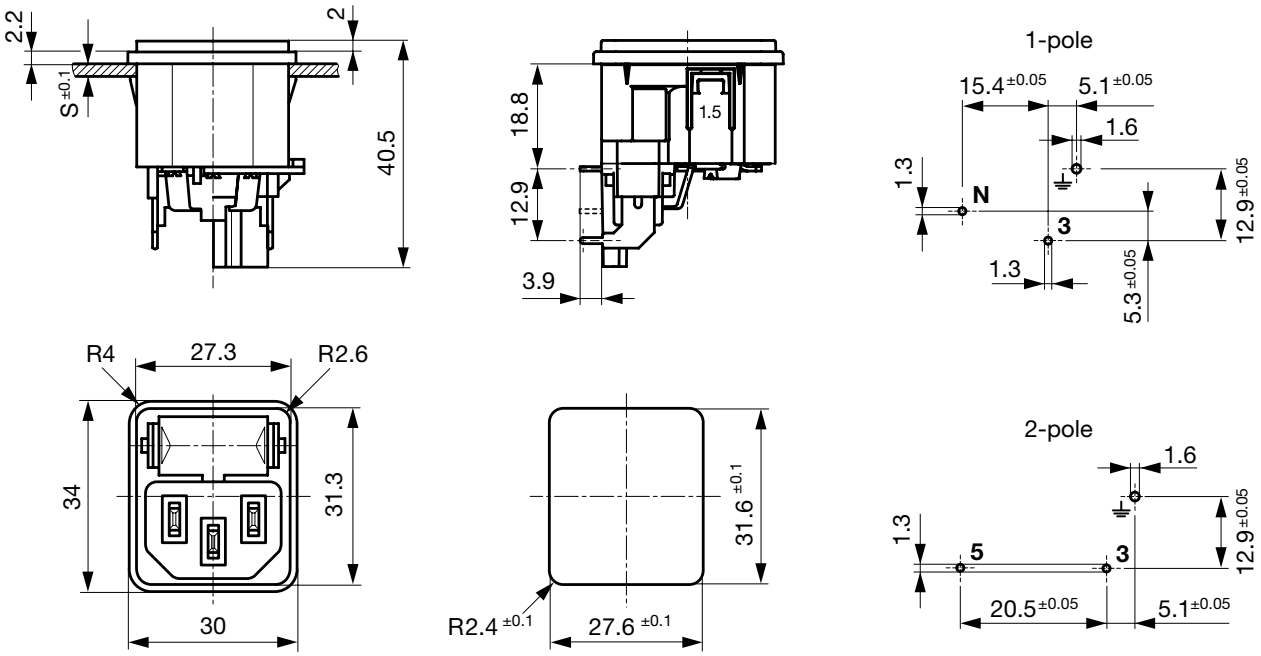

Diagrams

with internal connections
1-pole

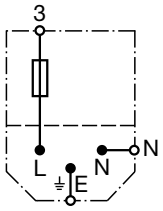

with internal connections
2-pole

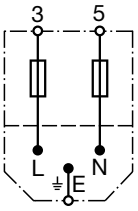

Derating Curves

1-pole

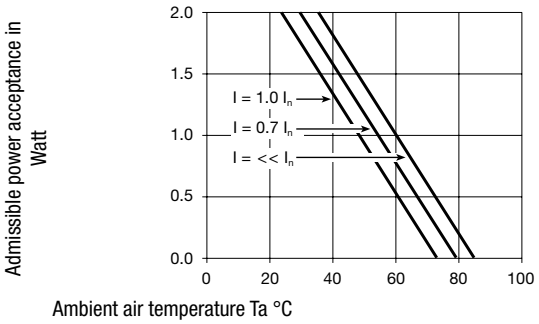

2-pole

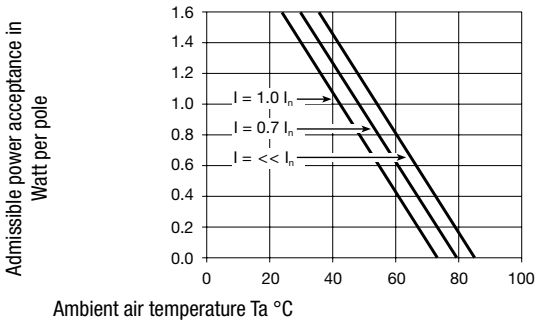

All Variants

Type	Panel mounting	Panel Thickness s [mm]	Fuseholder	Voltage Selector	Internally wired	Order Number	
KEA-Print	Snap-in	1.5	1-pole	-	●	4301.3212	
KEA-Print	Snap-in	2	1-pole	-	●	4301.3213	
KEA-Print	Snap-in	2.5	1-pole	-	●	4301.3214	
KEA-Print	Snap-in	1.5	2-pole	-	●	4301.3202	▮
KEA-Print	Snap-in	2	2-pole	-	●	4301.3203	
KEA-Print	Snap-in	2.5	2-pole	-	●	4301.3204	▮
KEA-Print	Screw	-	1-pole	-	●	4301.3211	▮
KEA-Print	Screw	-	2-pole	-	●	4301.3201	▮

▮ Most Popular.

Availability for all products can be searched real-time:https://www.schurter.com/en/Stock-Check/Stock-Check-SCHURTER

Packaging unit 50 Pcs

Required Accessory

Description

Fusedrawer 2
Fusedrawer für Fuse Links 5x20 mm, with or without Voltage Selector Insert

Fingergrip, 2-pole	4301.1401
Extra-Safe, 2-pole	4301.1403
Fingergrip, 1-pole	4301.1405
Extra-Safe, 1-pole	4301.1407
	...

Accessories

Cord retaining kits
Cord retaining strain relief

Flat head, A	4700.0001
Countersunk, B	4700.0002

Mating Outlets/Connectors

Category / Description

Appliance Outlet Overview complete

4787, Mounting: Screw-on mounting, Appliance Outlet: IEC Solder terminals, 10 A, Suitable for appliances with protection class I	4787
4788, Mounting: Snap-in version, Appliance Outlet: IEC Solder terminals or quick connect terminals, 10 A, Suitable for appliances with protection class I	4788
IEC Appliance Outlet F or H, Screw-on Mounting, Front Side, Solder, PCB or Quick-connect Terminal	5091
Appliance Outlet further types to KEA-Print	

Connector Overview complete

4022 Mounting: Power Supply Cord, 3 x 1.5 mm², Screw clamps, Connector: IEC C13	4022
4782 Mounting: Power Cord, 3 x 1 mm² / 3 x 18 AWG, Cable, Connector: IEC C13	4782
4012 Mounting: Power Supply Cord, 3 x 1 mm², Screw clamps, Connector: IEC C13	4012
4785 Mounting: Power Cord, 3 x 1 mm² / 3 x 18 AWG, Cable, Connector: IEC C13	4785
4300-06 Mounting: Power Cord, 3 x 1 mm² / 3 x 18 AWG, Cable, Connector: IEC C13	4300-06
Connector further types to KEA-Print	...

Mating Outlets/Connectors shuttered

Power Cord Overview complete

VAC13KS, Overview, V-Lock cord retaining, diverse Connector IEC C13, diverse, black	VAC13KS
VAC17KS, V-Lock cord retaining, diverse m, Connector IEC C17, diverse, black / grey / white	VAC17KS
Power Cord further types to KEA-Print	

12.02.2020

The specifications, descriptions and illustrations indicated in this document are based on current information. All content is subject to modifications and amendments. Information furnished is believed to be accurate and reliable. However, users should independently evaluate the suitability and test each product selected for their own applications.