DATE	REV	ECN	APP'D. BY
3-14-16	B10	10604	TRM
6-24-16	B11	10705	TRM

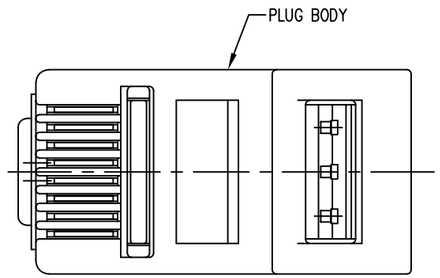

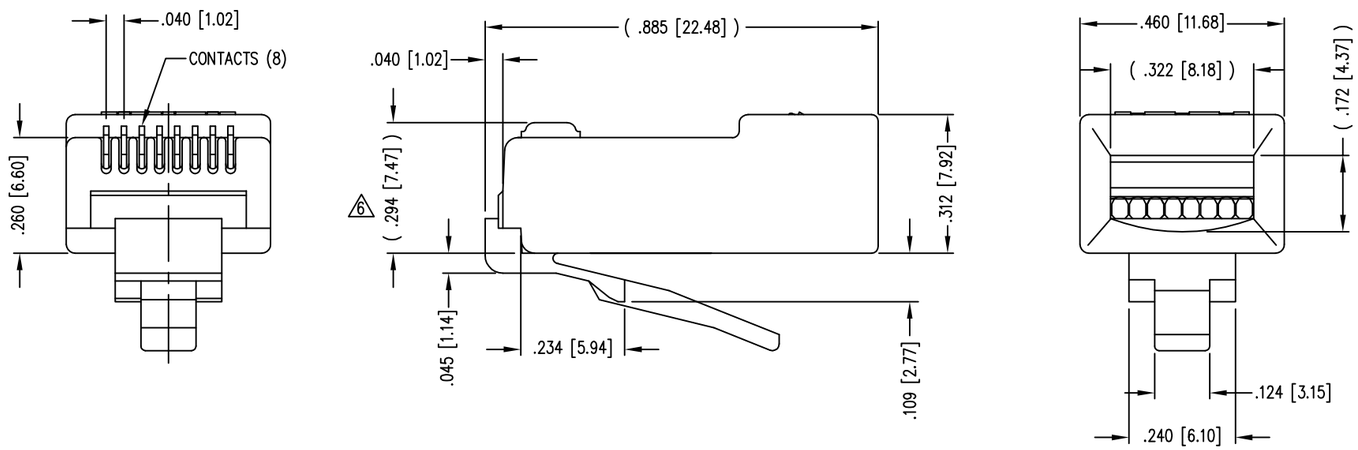

NOTES:

1- PLUG KIT CONSISTS OF :
PRE-INSERTED PLUG HOUSING

2- MATERIALS :
FRONT HOUSING PLASTIC : CLEAR POLYCARBONATE, UL 94-V0
CONTACTS : PHOSPHOR BRONZE, SELECTIVE GOLD PLATING

3- CONTACTS TERMINATE STRANDED & SOLID CONDUCTORS UP TO .037 [0.94] OUTSIDE DIAMETER OF INSULATION.

4- FOR PRODUCT SPECIFICATION SEE PR026-01.

5- DIMENSIONS AND TOLERANCES COMPLY WITH TIA-1096 STANDARD.

6 TERMINATED PLUG HEIGHT: .237 [6.02] ±.005 [0.13]

BULK	50 MICRO-INCHES [1.27um]	940-SP-3088R
PACKAGE	CONTACT PLATING IN MATING AREA	PART NUMBER

THIRD ANGLE PROJECTION

DO NOT SCALE DRAWING

DRAWING IS SUBJECT TO CHANGE WITHOUT NOTICE

DIMENSIONS: INCHES [METRIC]

UNLESS OTHERWISE SPECIFIED TOLERANCES ARE ±.005 [0.13] ANGLES ARE ± 1°

SHEET NO. 1 OF 1

RoHS

stewart CONNECTOR a bel group
11118 Susquehanna Trail South
Glen Rock, PA 17327-9199
(717) 235-7512
http://www.stewartconnector.com

TITLE: EIGHT CONDUCTOR/EIGHT POSITION LINE CORD MODULE WITH RADIAL BACK; COLOR: CLEAR

THIS DRAWING AND THE SUBJECT MATTER SHOWN THEREON ARE CONFIDENTIAL AND THE PROPRIETARY PROPERTY OF STEWART CONNECTOR AND SHALL NOT BE REPRODUCED, COPIED, OR USED IN ANY MANNER WITHOUT PRIOR WRITTEN CONSENT OF STEWART CONNECTOR. ONE OR MORE U.S. PATENTS MAY APPLY TO THIS PRODUCT. FOR DETAILS, PLEASE VISIT: HTTP://BELFUSE.COM/STEWART/STEWART_PATENTS/

DRN BY:	SAR	DATE	1-20-03
APPD BY:	RGC	DATE	1-20-03
DWG NO.	CT300010	REV.	B11

AutoCAD