METZ CONNECT
We realize ideas

Data sheet

OpDAT 24 PF 1RU patch panel fixed installation 6xSC-D MM (ceramic, aqua) pigtails OM3 placed and stripped

P/N 150205BA06-E
EAN 4250184168843

2015-19-06

Illustrations



Dimensional drawing

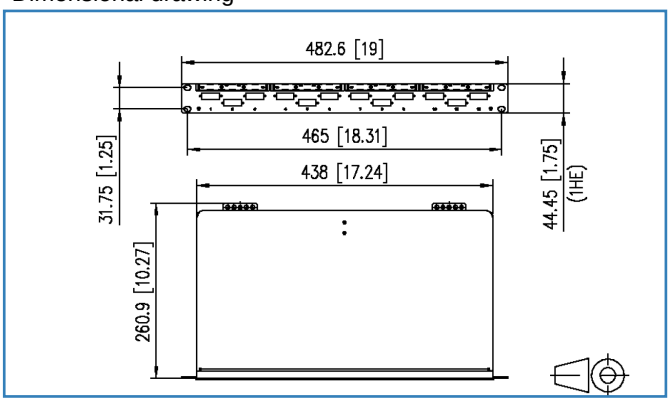

See enlarged drawings at the end of document

Product specification

- 19 inch 1RU fiber optic patch panel for fixed installation
- light aluminum construction
- equipped with SC-D couplers (metal)
- unused cutouts are closed by blank plugs
- removable front plate for easy adapter mounting
- variable cable entry (straight / inclined) from both sides possible
- cable relief with supplied cable tie or optional cable screw connection also possible
- cable diameter from 3 to 20 mm
- strain relief for central element / Kevlar
- cable management by means of freely positionable guide elements
- snap-on cover for easy access during service work
- label window for enclosed identification labels
- compact conductor pigtails with dia. 0.9 mm, length 2.0 m
- pigtails inserted and stripped in standard splice trays with crimp splice holders
- pigtails are cleaned and plugged in couplers

- variants: equipped with 6 or 12 SC-D couplers and pigtails each made of metal (OS2), heather violet (OM4), aqua (OM3) or metal (OM2)

© 2015 METZ CONNECT - Technische Änderungen vorbehalten! Subject to modifications! Sous réserve de modifications techniques!

Data sheet

OpDAT 24 PF 1RU patch panel fixed installation 6xSC-D MM (ceramic, aqua) pigtails OM3 placed and stripped

P/N 150205BA06-E
EAN 4250184168843

2015-19-06

Technical Data

General Data	
Fields of application	
	Structured building cabling, Data center
Design	patch panel
Mounting style	1RU
Transmission technology	Fiber optic
Port numbering	yes
Color	aqua
Dimensions	
Dimension (L x W x H)	260.90 x 482.60 x 44.45 mm
Dimension (L x W x H)	10.27 x 19.00 x 1.75 in.
Inches	19 inches
Height unit	1RU
Number of cables/ cores	12
Cable Type	pigtail(s)
Fiber class	OM3 (ISO/IEC 11801/EN 50173 & IEC 60793-2-10/EN 60793-2-10 A1.a.1)
Mode type of the fiber	Multimode
Labeling option	label window with identification label + printed numbers

Connections/interfaces	
Connector technology interface 1	SC-D Couplers
Connector technology interface 2	SC-D Couplers
Number of ports interface 1	12
Number of ports interface 2	12
Number of equipped ports interface 1	6
Number of ports interface 2 equipped	6
Number of ports with dust protection interface 2	6
Number of blind covers interface 2	6
Semi-tight buffered fiber pigtail length	2.00 m
Semi-tight buffered fiber pigtail length	6.56 ft
Semi-tight buffered fiber pigtail diameter	0.90 mm
Semi-tight buffered fiber pigtail diameter	0.04 in.
Cable access/outlet	variable, straight / inclined, from both sides possible

© 2015 METZ CONNECT - Technische Änderungen vorbehalten! Subject to modifications! Sous réserve de modifications techniques!

Data sheet

OpDAT 24 PF 1RU patch panel fixed installation 6xSC-D MM (ceramic, aqua) pigtails OM3 placed and stripped

P/N 150205BA06-E
EAN 4250184168843

2015-19-06

Technical Data

Electrical characteristics	
Insertion loss	max. 0.4 dB
Return loss	min. 20 dB
Mechanical characteristics	
Cut-out	SC-D, LC-Q, ST-D
Connector type	Duplex
Life - Number of mating cycles	min. 1000
Strain relief	yes
Materials and material properties	
Material - Coupler housing	Plastics
Material - Front cover	Al (Aluminium)
Material - Sleeve	ceramic, slotted
Approvals	
RoHS	compliant
The product meets the following standards	
Fibre optic connector interfaces	DIN EN 61754-4
Classifications	
ETIM 5.0	EC001130
Packing details	
Type of packaging	1 pc(s) / box
Packaging unit - Weight (gram)	2085.00 g
Packaging unit - Weight (pound)	4.60 lb
Packaging dimension (W x H x D)	523.00 x 361.00 x 45.00 mm
Packaging dimension (W x H x D)	20.59 x 14.21 x 1.77 in.

© 2015 METZ CONNECT - Technische Änderungen vorbehalten! Subject to modifications! Sous réserve de modifications techniques!

Data sheet

OpDAT 24 PF 1RU patch panel fixed installation 6xSC-D MM (ceramic, aqua) pigtails OM3 placed and stripped

P/N 150205BA06-E
EAN 4250184168843

2015-19-06

Accessories

P/N	Designation
899789-01	Label sheet for E-DAT C6 and E-DAT design patch panels

© 2015 METZ CONNECT - Technische Änderungen vorbehalten! Subject to modifications! Sous réserve de modifications techniques!

Data sheet

OpDAT 24 PF 1RU patch panel fixed installation 6xSC-D MM (ceramic, aqua) pigtails OM3 placed and stripped

P/N 150205BA06-E
EAN 4250184168843

2015-19-06

Illustrations

Dimensional drawing

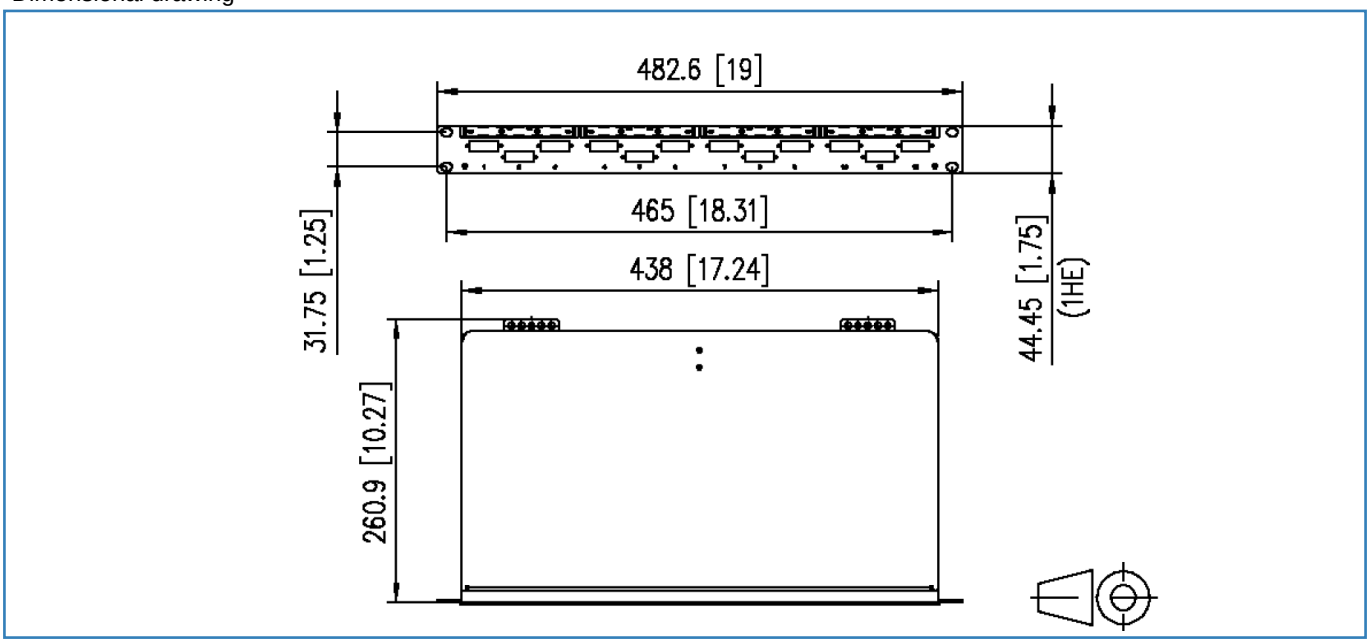

© 2015 METZ CONNECT - Technische Änderungen vorbehalten! Subject to modifications! Sous réserve de modifications techniques!

Data sheet
OpDAT fiber OM3 BR

P/N 150XXX5

2015-19-06

Technical Data

General Data	
Transmission technology	Fiber optic
Mode type of the fiber	Multimode
Fiber class	OM3 (ISO/IEC 11801/EN 50173 & IEC 60793-2-10/EN 60793-2-10 A1.a.2)
Fiber construction	50/125 µm

Transmission characteristics	
Transmission rate up to 100 GBit	IEEE 802.3ba
Reach	
Reach 100BASE	2000 m
Reach 1000BASE LX	550 m
Reach 1000BASE SX	1000 m
Reach 10GBASE LX4	300 m
Reach 10GBASE SW/SR	300 m
Reach 40GBASE SR4	100 m
Overfilled (OFL) modal bandwidth at 850 nm (min.)	1500 MHz * km
Overfilled (OFL) modal bandwidth at 1300 nm (min.)	500 MHz * km
Effective modal bandwidth (EMB) at 850 nm (min.)	2000 MHz * km

Connections/interfaces	
Connector technology interface 1	Free line end
Connector technology interface 2	Free line end
Fiber core diameter	50 ± 2.0 Î¼m
Fiber cladding diameter	125.0 ± 1.0 mm
Primary coating diameter - colored	242 ± 0.5 µm
Primary coating diameter - uncolored	250 ± 15 Î¼m

Electrical characteristics	
Maximum value of cable attenuation at 850 nm	3.0 dB/km
Maximum value of cable attenuation at 1300 nm	1.0 dB/km

Mechanical characteristics	
Proof stress level	min. 0.7 (˜ 1 %) GPa
Strip force (peak)	1.3 = Fpeak.strip max. 8.9 N
Fiber bending loss R=7.5 mm 850/1300 nm	max. 0.2 / = 0.5 dB
Biber bending loss R=15 mm 850/1300 nm	max. 0.1 / = 0.3 dB

© 2015 METZ CONNECT - Technische Änderungen vorbehalten! Subject to modifications! Sous réserve de modifications techniques!

Data sheet

OpDAT fiber OM3 BR

P/N
150XXX5

2015-19-06

Technical Data

Mechanical characteristics	
Fiber cladding non-circularity	max. 0.7 %
Core non-circularity	max. 5 %
Core (MDF)-cladding concentricity error	max. 1.0 µm
Primary coating concentricity error	max. 5 %
Primary coating-cladding concentricity error	max. 6
Inhomogeneity of OTDR trace for any two 1000 metre fiber length	max. 0.1 dB/km
Group refractive index at 1310 and 1550 nm	1.482
Group refractive index at 1625 nm	1.477
Numerical aperture	0.200 ± 0.015
Materials and material properties	
Bend insensitivity	yes
The product meets the following standards	
Generic cabling systems	
General requirements	ISO/IEC 11801 | DIN EN 50173-1
Optical fibers: Generic specification - basic test procedures for optical cables	
General and definitions	ISO/IEC 60794-1-20
Mechanical Tests Methods	ISO/IEC 60794-1-21
Optical fibers: Measuring methods and test procedures	
Fibre proof test	ISO/IEC 60793-1-30
Coating strippability	ISO/IEC 60793-1-32
Numerical aperture	ISO/IEC 60793-1-43
Optical fibers: Indoor optical cables	
Family specification for simplex and duplex cables	ISO/IEC 60793-2-10 (A1a.2)
TIA/ANSI-492	AAAC
Packing details	
Primary coating diameter - colored	242 ± 0.5 µm

© 2015 METZ CONNECT - Technische Änderungen vorbehalten! Subject to modifications! Sous réserve de modifications techniques!