© 2020 TE Connectivity. All Rights Reserved.

REVISIONS

P	LTR	DESCRIPTION	DATE	DWN	APVD
	F1	CONVERSION CORRECTIONS, ECR-20-005962	28MAY2020	AFK	LS

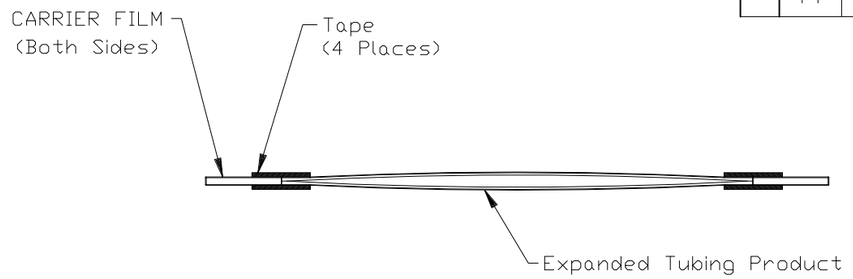

SECTION A - A

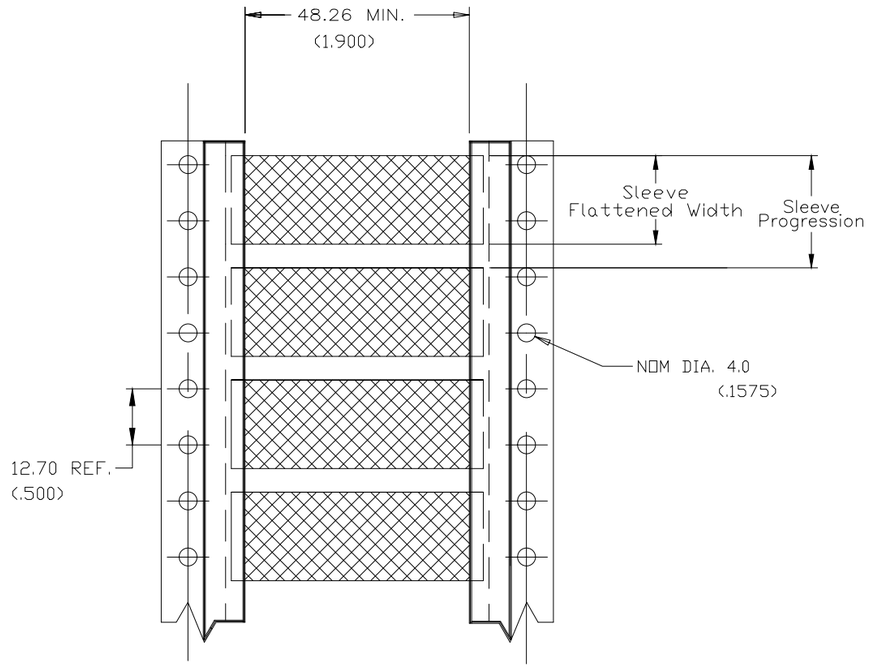

Product Size	3/32	1/8	3/16	1/4	3/8	1/2	3/4	1	1-1/2
Minimum Sleeve Flattened Width	4.32 (.170)	5.84 (.230)	8.00 (.315)	10.70 (.420)	15.5 (.610)	20.4 (.804)	30.5 (1.200)	40.4 (1.590)	60.3 (2.37)
Nominal Sleeve Progression	12.70 (.500)	12.70 (.500)	12.70 (.500)	16.93 (.667)	25.40 (1.000)	29.63 (1.167)	42.33 (1.667)	50.80 (2.000)	71.96 (2.833)
"D" Minimum Supplied I.D.	2.38 (.0937)	3.18 (.1250)	4.76 (.1875)	6.35 (.250)	9.53 (.375)	12.70 (.500)	19.05 (.750)	25.40 (1.00)	38.10 (1.50)
"d" Maximum Recovered I.D.	0.79 (.0312)	1.59 (0.0625)	2.38 (0.0938)	3.18 (0.1250)	4.76 (0.1875)	6.35 (0.250)	9.53 (0.375)	12.70 (0.500)	19.05 (0.750)
"w" Recovered wall	0.38±0.08 (.015±.003)	0.38±0.08 (.015±.003)	0.38±0.08 (.015±.003)	0.38±0.08 (.015±.003)	0.38±0.08 (.015±.003)	0.38±0.08 (.015±.003)	0.38±0.08 (.015±.003)	0.43±0.10 (.017±.004)	0.43±0.10 (.017±.004)

DIMENSIONS IN mm (inches)

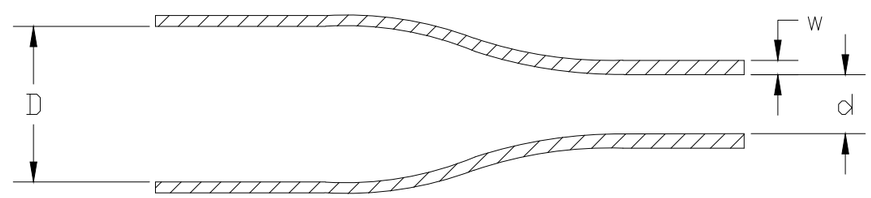

THIS DRAWING IS A CONTROLLED DOCUMENT.

DIMENSIONS: mm

TOLERANCES UNLESS OTHERWISE SPECIFIED:
0 PLC ± –
1 PLC ± –
2 PLC ± –
3 PLC ± –
4 PLC ± –
ANGLES ± –

MATERIAL: CROSSLINKED PVdF

FINISH: –

DWN AFK 26FEB2020
CHK – –
APVD LS 26FEB2020
PRODUCT SPEC RW-2512
APPLICATION SPEC 411-121008
WEIGHT VARIOUS

TE Connectivity

NAME HT-SCE – –

SIZE	CAGE CODE	DRAWING NO	RESTRICTED TO
A3	0198G	C-MCD160005	–

CUSTOMER DRAWING | SCALE – | SHEET 1 OF 1 | REV F1

1470-19 (1/15)