PSR-PLC21-2CO-24DC-SC - Coupling relay

1480226

https://www.phoenixcontact.com/us/products/1480226

Please be informed that the data shown in this PDF document is generated from our online catalog. Please find the complete data in the user documentation. Our general terms of use for downloads are valid.

Safe coupling relay with force-guided contacts, electrically isolated, 2 changeover contacts, 1-channel, fixed screw terminal block, width: 14 mm

Commercial data

Item number	1480226
Packing unit	10 pc
Minimum order quantity	10 pc
Sales key	DN01
Product key	DNA162
GTIN	4063151897741
Weight per piece (including packing)	80.38 g
Weight per piece (excluding packing)	76 g
Customs tariff number	85364190
Country of origin	DE

Technical data

Notes

Note on application

Note on application	Only for industrial use

Product properties

Product type	Coupling relay
Product family	PLC-INTERFACE
Application	Forcibly guided contacts
Mechanical service life	approx. 10^7 cycles
Relay type	Electromechanical relay in accordance with IEC/EN 61810

Insulation characteristics

Overvoltage category	III
Pollution degree	2
Overvoltage category	III
Degree of pollution	2

Times

Typ. starting time with U_s	< 70 ms (when controlled via A1)
Typical release time	< 50 ms (on demand via A1)
Recovery time	500 ms (following demand of the safety function)

Electrical properties

Maximum power dissipation for nominal condition	4.825 W (U_B = 30 V, U_S = 24 V, I_S = 30 mA, $I_L{}^2$ = 37 A, $R_{contact}$ = 0.1 Ω)
Nominal operating mode	100% operating factor
Rated insulation voltage	250 V AC
Rated surge voltage/insulation	Basic insulation 4 kV between all current paths and housing
	Safe isolation, reinforced insulation 6 kV between 250 V load current paths and 24 V logic paths

Supply

Designation	A1/A2
Rated control circuit supply voltage U_S	21.6 V DC ... 28.8 V DC
Rated control circuit supply voltage U_S	24 V DC -10 % / +20 %
Rated control supply current I_S	30 mA
Inrush current	typ. 100 mA (Δt = 10 ms at U_s)
Filter time	1 ms (Test pulse width, high test pulse and low test pulse)
	1 s (Test pulse rate, high test pulse and low test pulse)
Power consumption at U_D	650 mW (to U_S)
Protective circuit	Serial protection against polarity reversal; Suppressor diode, 38.6 V/600 W
Status display	1 x green LED (PWR)

Output data

Relay: Relay outputs (11/12/14, 21/22/24)

Output description	safety-related
Number of outputs	2
Contact switching type	2 changeover contacts
Contact material	AgNi
Switching capacity	min. 150 mW (N/O contact / N/C contact)
Inrush current	max. 6 A (N/O contact)
	max. 4 A (N/C contact)
Limiting continuous current	6 A (N/O contact, high demand)
	4 A (N/O contact, low demand)
	4 A (N/C contact, high-demand)
	2.4 A (N/C contact, low-demand)
Sq. Total current	37 A^2 (N/O contact, high-demand, observe derating)
	16 A^2 (N/C contact, high-demand, observe derating)
Switching frequency	max. 1 Hz
Mechanical service life	10^7 cycles
Output fuse	6 A gL/gG
	4 A gL/gG (for low-demand applications)

Connection data

Conductor connection

Connection method	Screw connection
Conductor cross-section rigid	0.14 mm² ... 2.5 mm²
Conductor cross-section flexible	0.14 mm² ... 2.5 mm²
Conductor cross-section flexible, with ferrule without plastic sleeve	0.2 mm² ... 2.5 mm²
Conductor cross-section AWG	26 ... 14
Stripping length	8 mm
Screw thread	M3
Tightening torque	0.5 Nm

Signaling

Operating voltage display	1 x green LED (PWR)

Dimensions

Width	14 mm
Height	80 mm
Depth	104 mm

Material specifications

Color (Housing)	yellow (RAL 1018)
Housing material	PA

Characteristics

Safety data: EN ISO 13849

Category	1
Performance level (PL)	c

Safety data: IEC 61508 – High-demand for 1-channel wiring (1oo1 structure)

Safety Integrity Level (SIL)	2

Safety data: IEC 61508 – Low-demand for 1-channel wiring (1oo1 structure)

Safety Integrity Level (SIL)	2

Safety data: EN IEC 62061

Safety Integrity Level (SIL)	2

Environmental and real-life conditions

Ambient conditions

Degree of protection	IP20
Min. degree of protection of inst. location	IP54
Ambient temperature (operation)	-20 °C ... 60 °C (observe derating)
Ambient temperature (storage/transport)	-20 °C ... 85 °C
Maximum altitude	≤ 2000 m (Above sea level)
Max. permissible humidity (storage/transport)	75 % (on average; 95% occasionally, non-condensing)
Max. permissible relative humidity (operation)	75 % (on average; 95% occasionally, non-condensing)
Shock	10g for Δt = 11 ms (continuous shock: 5g for Δt = 16 ms)
Vibration (operation)	10 Hz ... 150 Hz, amplitude 0.75 mm, 1g

Approvals

CE

Identification	CE-compliant

Electronic devices in rail vehicles

Vibration (operation)	10 Hz ... 150 Hz, amplitude ±0,75 mm, 1g

Mounting

Mounting type	DIN rail mounting
Assembly note	See derating curve
Mounting position	vertical or horizontal

Drawings

Block diagram

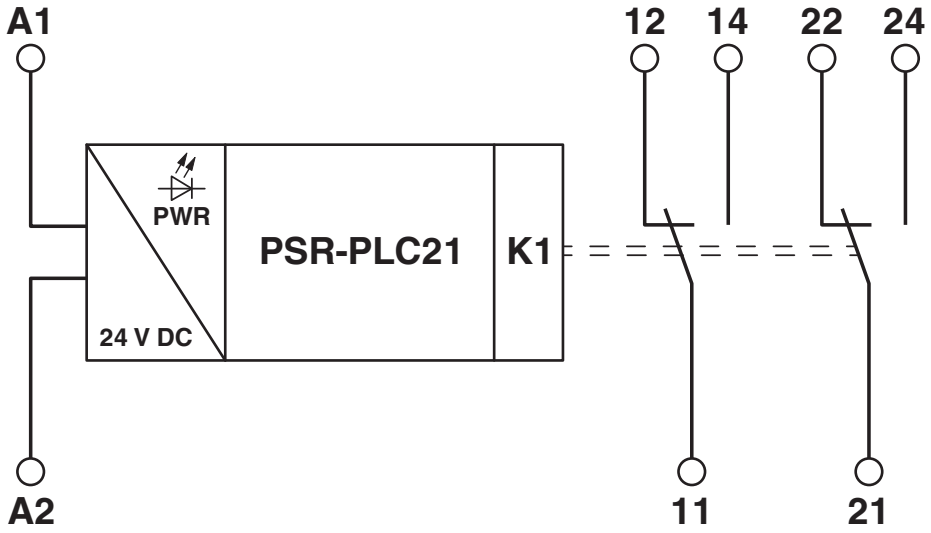

Approvals

To download certificates, visit the product detail page: https://www.phoenixcontact.com/us/products/1480226

Functional Safety
Approval ID: 4478015124326

cULus Listed
Approval ID: E140324

Classifications

ECLASS

ECLASS-13.0	27371601
ECLASS-15.0	27371601

ETIM

ETIM 9.0	EC001437

Environmental product compliance

EU RoHS

Fulfills EU RoHS substance requirements	Yes
Exemption	7(a), 7(c)-I

China RoHS

Environment friendly use period (EFUP)	EFUP-50
	An article-related China RoHS declaration table can be found in the download area for the respective article under "Manufacturer declaration". For all articles with EFUP-E, no China RoHS declaration table issued and required.

EU REACH SVHC

REACH candidate substance (CAS No.)	Lead(CAS: 7439-92-1)
SCIP	51d1e278-3deb-43ec-9dbd-c5c8e6cae076

Phoenix Contact 2025 © - all rights reserved
https://www.phoenixcontact.com

Phoenix Contact USA
586 Fulling Mill Road
Middletown, PA 17057, United States
(+717) 944-1300
info@phoenixcon.com