CHARX T2HCI12-3AC32-2,0M2 - Vehicle charging inlet

1271966

https://www.phoenixcontact.com/nl/products/1271966

Please be informed that the data shown in this PDF document is generated from our online catalog. Please find the complete data in the user documentation. Our general terms of use for downloads are valid.

The figure shows a version of the product

CHARX connect universal, AC type 2, Vehicle charging inlet, 32 A , 480 V AC, Single wires, length: 2 m, locking actuator: 12 V, 4-pos., Front and rear mounting, M6, housing: black, for charging electric vehicles (EV) with alternating current (AC), IEC 62196-2, A protective cap is supplied as standard for the AC contacts.

Product description

Vehicle charging inlet for charging with alternating current (AC), compatible with type 2 AC vehicle charging connectors (EVSE), for installation in electric vehicles (EV).

Your advantages

- Complete product range
- Uniform, space-saving dimensions for the installation space and the screw connection points of all Phoenix Contact vehicle charging inlets
- Developed and produced in accordance with the IATF 16949 automotive standard and ISO 9001
- Integrated interlock during charging
- Manual emergency release of the locking actuator
- Protected and sealed against dirt and water with a high degree of protection

Commercial data

Item number	1271966
Packing unit	1 pc
Minimum order quantity	1 pc
Sales key	XWCAIC
Product key	XWCAIC
GTIN	4063151463182
Weight per piece (including packing)	1.781 g
Weight per piece (excluding packing)	1.781 g
Customs tariff number	85444290
Country of origin	PL

Technical data

Notes

General	A protective cap is supplied as standard for the AC contacts.

Product properties

Product type	Vehicle charging inlet
Product family	CHARX connect universal
Charging standard	AC type 2
Charging mode	Mode 2, 3
Customer variations	On request

Electrical properties

Charging power and current (AC charging, 3-phase)

Type of charging current	AC 3-phase
Charging current	32 A AC (3-phase)
Charging power	26 kW

Pin assignment (Power contacts)

Note on the connection method	Crimp connection, cannot be disconnected
Number	5 (L1, L2, L3, N, PE)
Rated voltage	480 V AC
Rated current	32 A AC

Pin assignment (Signal contacts)

Note on the connection method	Crimp connection, cannot be disconnected
Type of signal transmission	Pulse width modulation with modulated Powerline communication in accordance with ISO/IEC 15118 / DIN SPEC 70121
Number	2 (CP, PP)
Rated voltage	30 V AC
Rated current	2 A
Coding	4.7 kΩ (between PE and PP)
Insulation resistance	> 200 MΩ

Locking actuator

Locking actuator	12 V, 4-pos.
	Right position
Possible power supply range at the motor	9 V ... 16 V
Maximum voltage for locking detection	12 V
Typical motor current for locking	0.25 A
Reverse current of the motor	max. 1.5 A
Max. dwell time with reverse current	1 s
Recommended adaptation time	600 ms
Pause time after entry or exit path	3 s

Service life insertion cycles	> 10000 load cycles
Lock recognition	available
Mechanical emergency release	available
Ambient temperature (operation)	-40 °C ... 80 °C

Temperature sensors (PTC chain)

Sensor type	PTC chain
Standards/regulations	DIN EN 60738-1
Attachment point	Sensor for the AC contacts
Measuring range_resistance	790 Ω ... 1420 Ω
Resistance	max. 1280 Ω ±5 K
Recommended measured current	≤ 1 mA (U_{max}= 16 V DC)
Ambient temperature	-40 °C ... 130 °C (Operation)

Dimensions

Vehicle charging inlet

Dimensional drawing	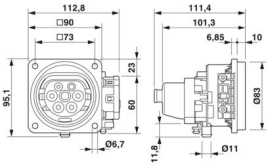
Width	112.8 mm
Height	95.1 mm
Depth	111.4 mm

Bore dimensions

Width	73 mm
Height	73 mm
Depth	73 mm

Material specifications

Color (Housing)	black (9005)
Color (Mating face)	black (9005)
Material (Housing)	Plastic
Material (Contact surface)	Silver

Cable/line

Cable length	2 m
Cable type	Single wires

Single-core wires for AC

Cable length	2 m
Cable structure	5 x 6 mm²
Single wire, material	Silicone

Single wire, color	OG
External cable diameter	15.90 mm ±0.3 mm
Cable resistance	≤ 3.2 Ω/km

Single-core wire for PE

Cable length	2 m

Single-core wires for locking actuator

Cable length	1.5 m
Cable structure	4 x 0.5 mm²
Single wire, material	PVC
Single wire, color	BU/RD, BU/GN, BU/YE, BU/BN
External cable diameter	1.60 mm ±0.20 mm
Cable resistance	≤ 37.1 Ω/m

Single-core wires for PTC temperature sensors

Cable length	1 m
Cable structure	2 x 0.5 mm²
Single wire, material	PVC
Single wire, color	BN/GY
External cable diameter	1.60 mm ±0.20 mm
Cable resistance	≤ 37.1 Ω/m

Single-core wires for communication

Cable length	1 m
Cable structure	2 x 0.5 mm²
Single wire, material	PVC
Single wire, color	BK
	WH
External cable diameter	1.60 mm ±0.20 mm
Cable resistance	≤ 37.1 Ω/m

Mechanical properties

Mechanical data

Insertion/withdrawal cycles	> 10000
Insertion force	< 100 N
Withdrawal force	< 100 N

Environmental and real-life conditions

Ambient conditions

Degree of protection (Vehicle charging inlet)	IP55 (plugged in; when plugged in and ready to operate, the degree of protection is only ensued if both plug-in components are original products from Phoenix Contact or suitable standard-compliant products)
	IP67 (Inner area of vehicle charging inlet)
Ambient temperature (operation)	-40 °C ... 60 °C

Ambient temperature (storage/transport)	-40 °C ... 85 °C
Altitude	4000 m (above sea level)

Standards and regulations

Standards

Standards/regulations	IEC 62196-2

Mounting

Mounting type	Front and rear mounting (0 to 90 degree frontal inclination possible)
Mounting hole diameter	6.80 mm (ø)
Fixing screws	M6
Screws included in the scope of delivery	none

Drawings

Dimensional drawing

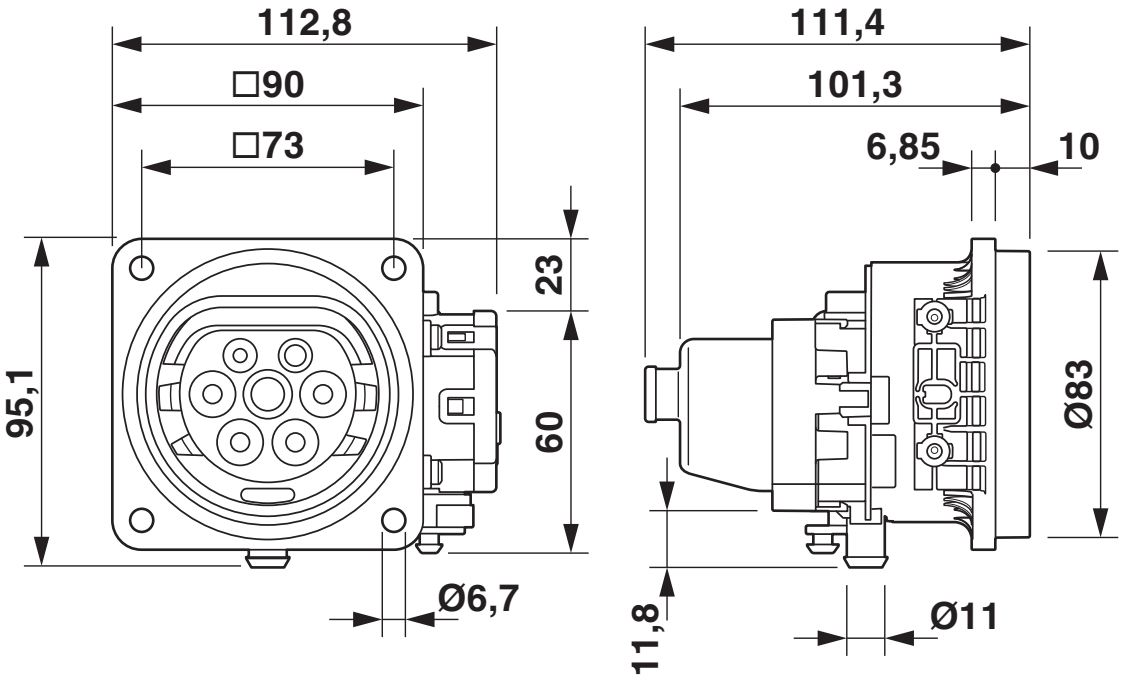

Dimensional drawing

Connection diagram

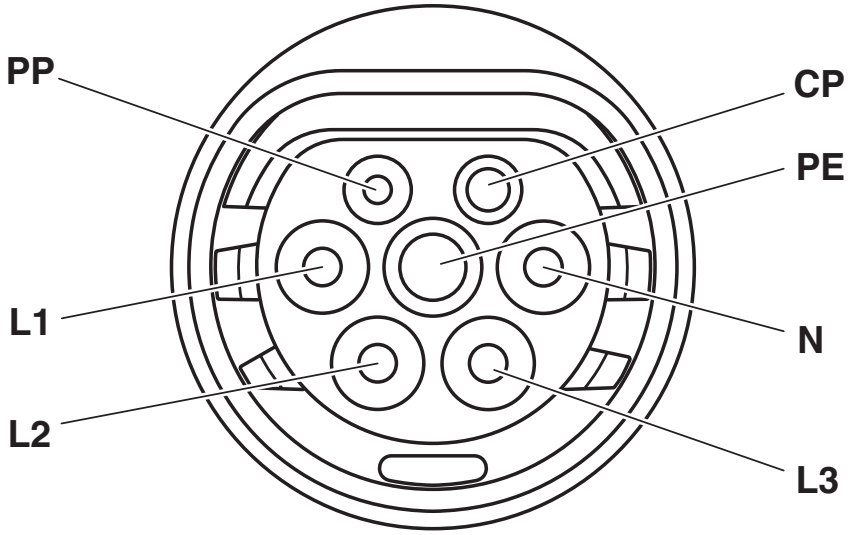

Pin assignment of vehicle charging inlets

CHARX T2HCI12-3AC32-2,0M2 - Vehicle charging inlet

1271966

https://www.phoenixcontact.com/nl/products/1271966

Connection diagram

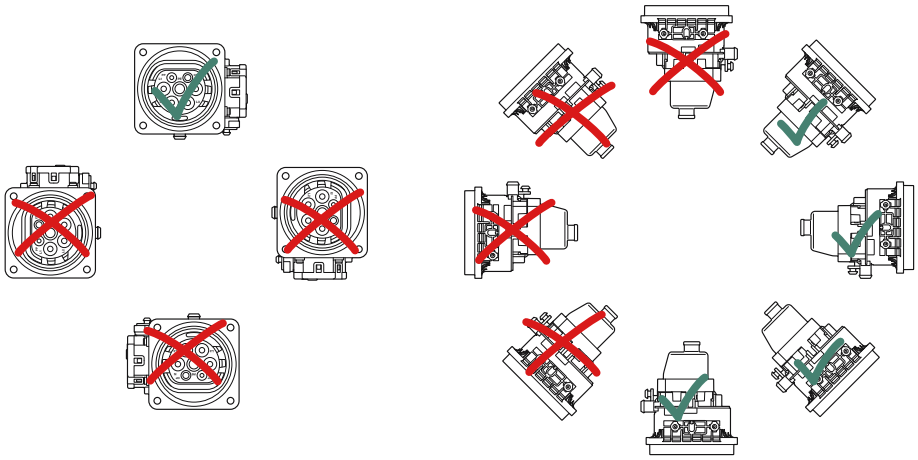

Installation positions

Functional drawing

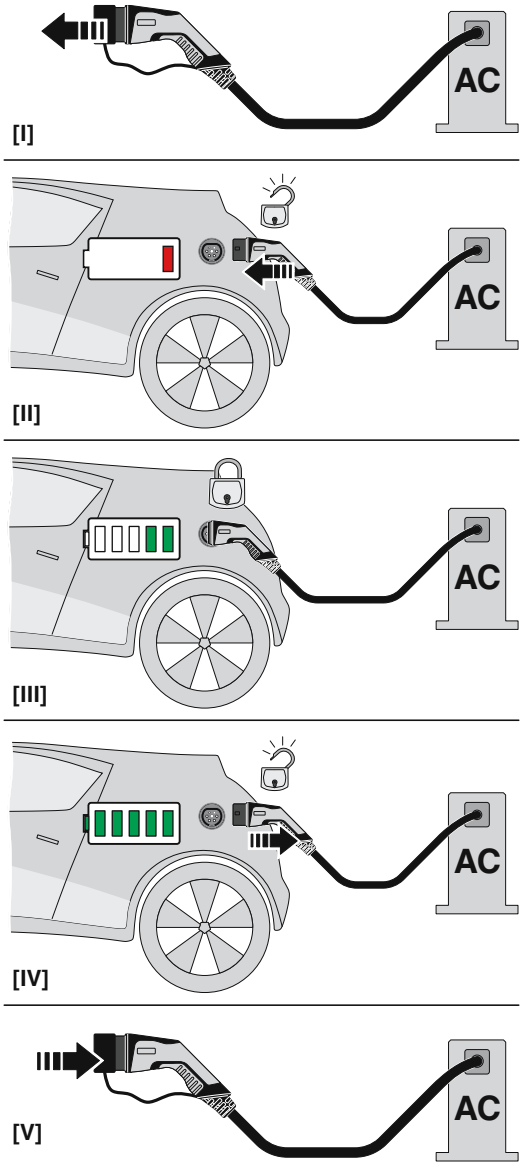

Operating instructions

Schematic diagram

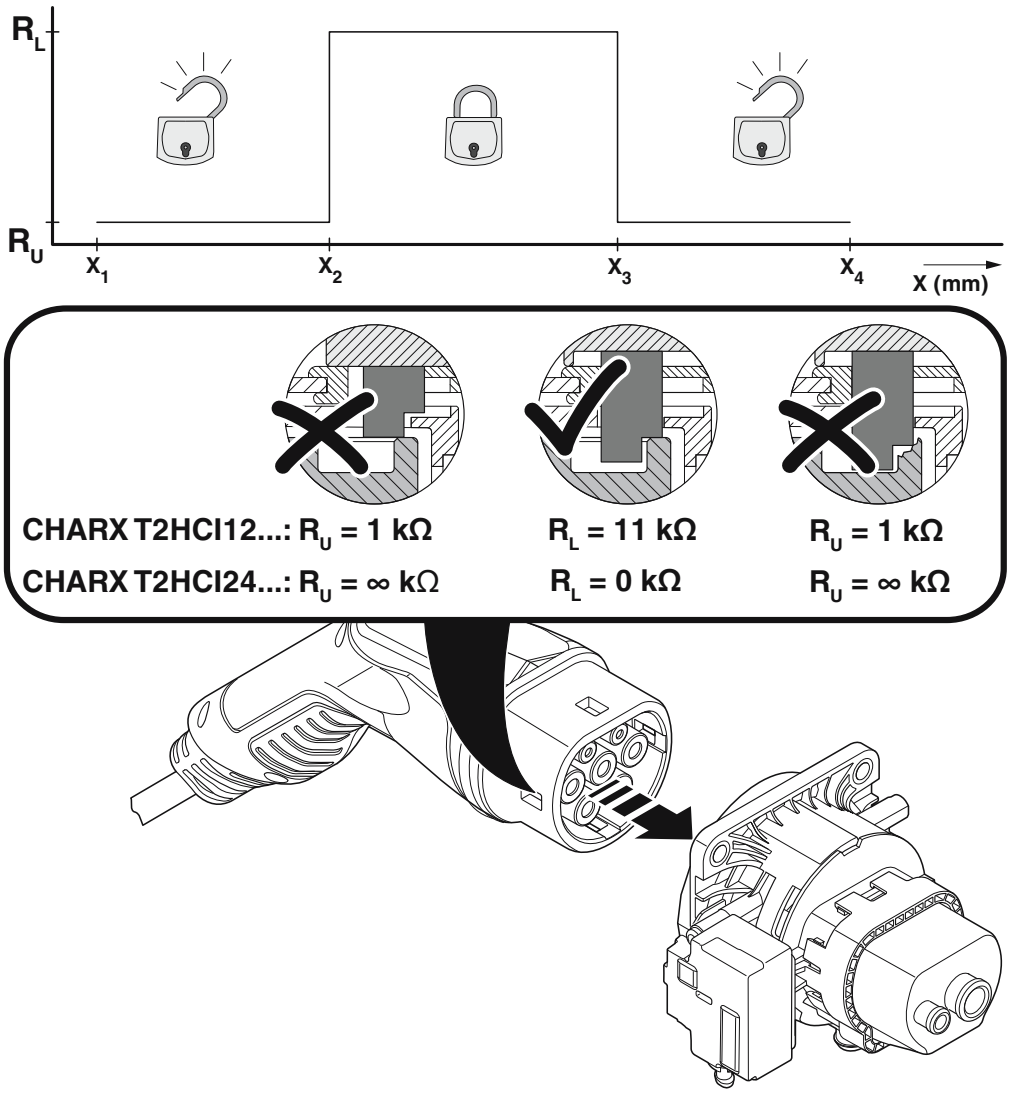

Detection for Vehicle Connector

Schematic diagram

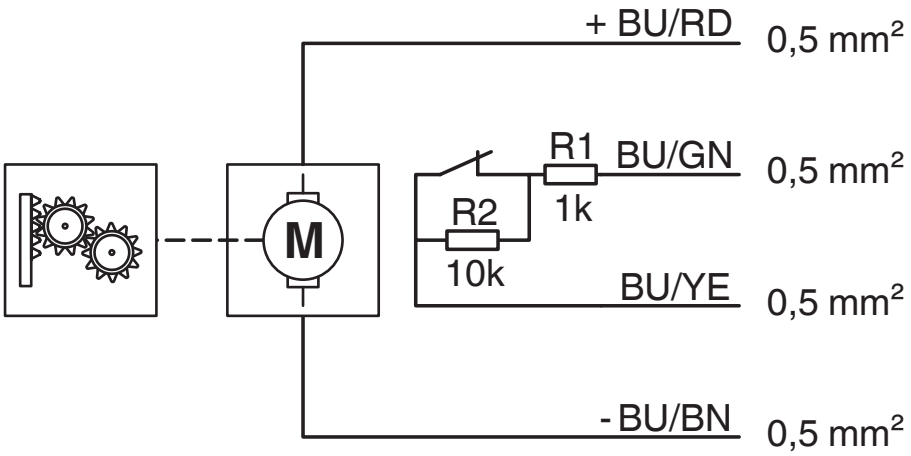

Block diagram of the locking actuator

Schematic diagram

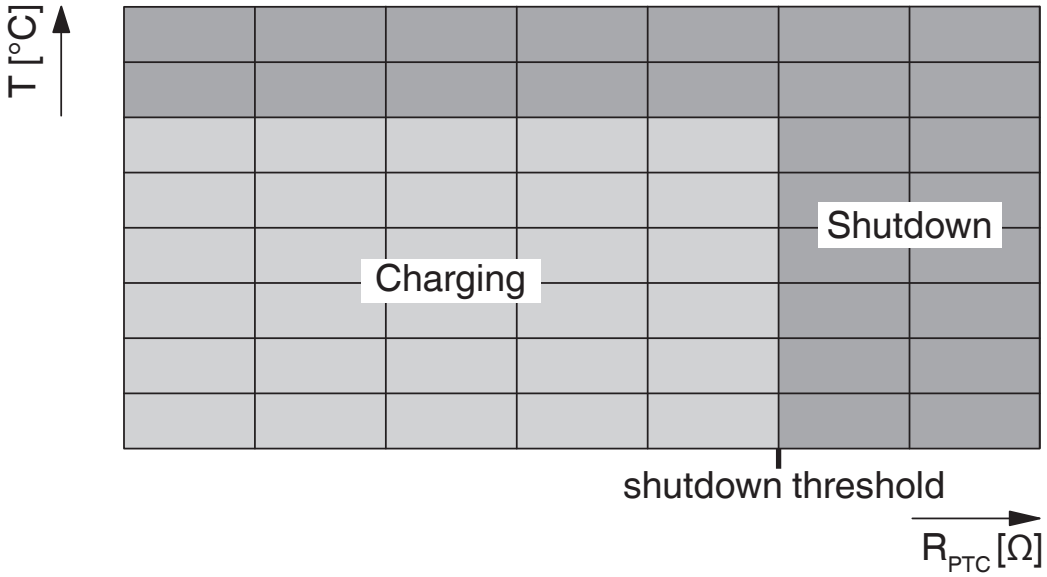

Temperature sensor technology resistance range at AC contacts

Diagram

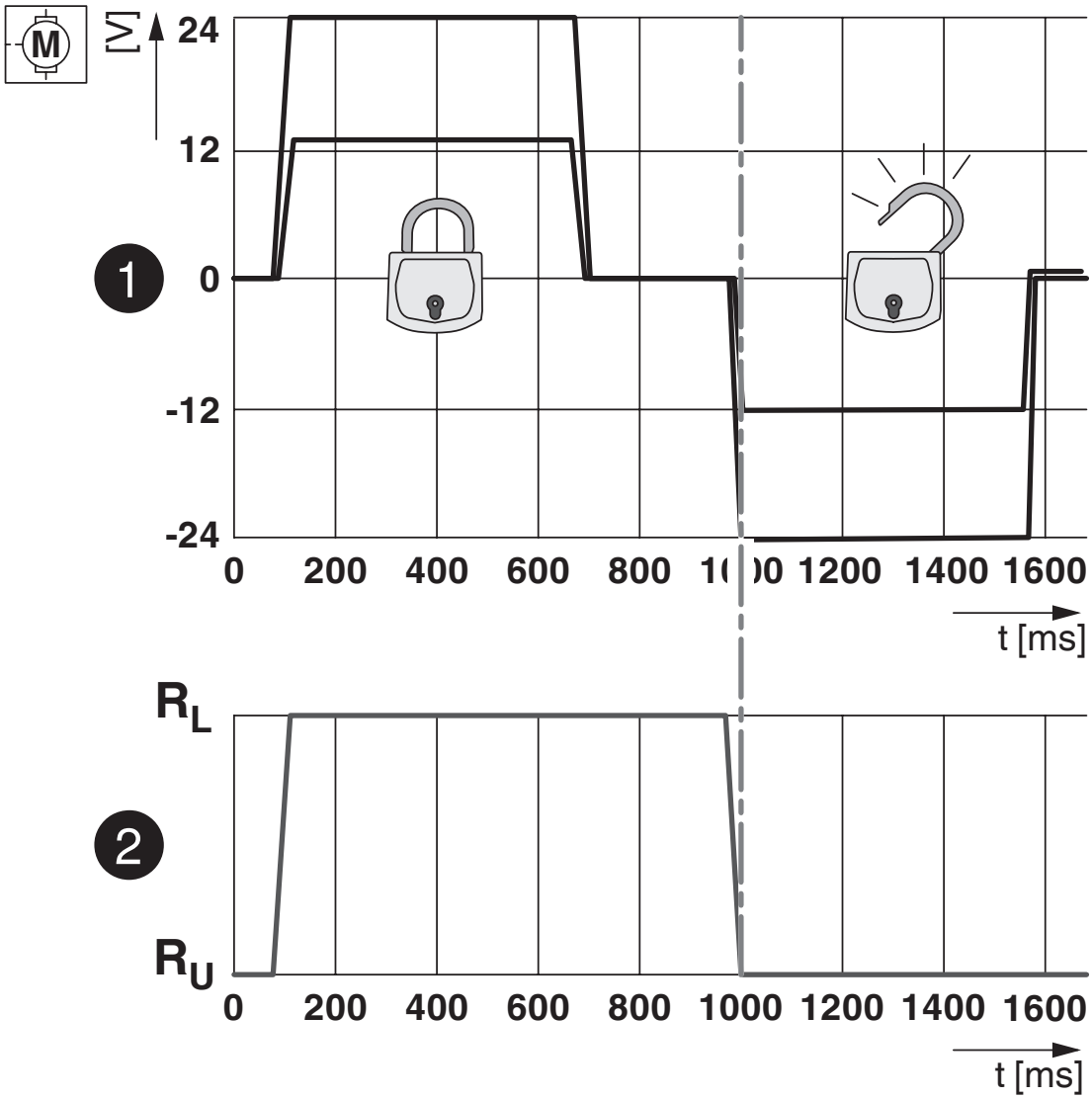

Locking states of the locking actuator

Classifications

ECLASS

ECLASS-15.0	27144706
ECLASS-13.0	27144706

ETIM

ETIM 10.0	EC002898

UNSPSC

UNSPSC 21.0	39121800

Environmental product compliance

EU RoHS

Fulfills EU RoHS substance requirements	Yes
Exemption	7(c)-I

China RoHS

Environment friendly use period (EFUP)	EFUP-10
	An article-related China RoHS declaration table can be found in the download area for the respective article under "Manufacturer declaration". For all articles with EFUP-E, no China RoHS declaration table issued and required.

EU REACH SVHC

REACH candidate substance (CAS No.)	Disodium 3,3'-[[1,1'-biphenyl]-4,4'-diylbis(azo)]bis(4-aminonaphthalene-1-sulphonate) (C.I. Direct Red 28)(CAS: 573-58-0)
SCIP	3e4f227f-6994-4f21-b66b-2bc398fa8f66

EF3.1 Climate Change

CO2e kg	33,66 kg CO2e

Phoenix Contact 2026 © - all rights reserved
https://www.phoenixcontact.com

PHOENIX CONTACT B.V.
Hengelder 56 6902 PA Zevenaar
Postbus 246 6900 AE Zevenaar
(0316) 59 17 20
sales@phoenixcontact.nl