CHARX GBH4I-DC125-2,0M - Vehicle charging inlet

1271834

https://www.phoenixcontact.com/nl/products/1271834

Please be informed that the data shown in this PDF document is generated from our online catalog. Please find the complete data in the user documentation. Our general terms of use for downloads are valid.

The figure shows a version of the product

CHARX connect universal, DC GB/T, Vehicle charging inlet, up to 250 A in Boost mode, 125 A permanent, 1000 V DC, Single wires, length: 2 m, Front and rear mounting, M6, housing: black, for charging with direct current (DC), GB/T 20234.3-2015, A protective cap is supplied as standard for the DC contacts.

Product description

Vehicle charging inlets for charging with direct current (DC), compatible with GB/T vehicle charging connectors (EVSE), for installation in electric vehicles (EV).

Commercial data

Item number	1271834
Packing unit	1 pc
Minimum order quantity	1 pc
Sales key	XWCAIG
Product key	XWCAIG
GTIN	4063151463151
Weight per piece (including packing)	3.000 g
Weight per piece (excluding packing)	2.074 g
Customs tariff number	85444290
Country of origin	PL

Technical data

Notes

General	A protective cap is supplied as standard for the DC contacts.

Product properties

Product type	Vehicle charging inlet
Product family	CHARX connect universal
Charging standard	DC GB/T
Charging mode	Mode 4
Customer variations	On request

Electrical properties

Coding	1 kΩ (between PE and CC1)

Charging power and current (DC charging)

Type of charging current	DC
Charging current	125 A DC
Charging power	125 kW
Rated voltage	1000 V

Charging power and current (DC charging in Boost Mode)

Type of charging current	DC Boost Mode
Charging current	up to 250 A DC
Charging power	up to 250 kW
Rated voltage	1000 V
Note	The specifications refer to charging in Boost Mode and are dependent on ambient conditions. For further details, see the packing slip in the download area.

Pin assignment (Power contacts)

Note on the connection method	Crimp connection, cannot be disconnected
Number	3 (DC+, DC-, PE)
Rated voltage	1000 V DC
Rated current	125 A DC

Pin assignment (Signal contacts)

Note on the connection method	Crimp connection, cannot be disconnected
Type of signal transmission	Pulse width modulation with modulated Powerline communication in accordance with ISO/IEC 15118 / DIN SPEC 70121
Number	6 (S+, S-, A+, A-, CC1, CC2)
Rated voltage	30 V AC
Rated current	2 A

Locking actuator

Locking actuator	without locking actuator

Temperature sensors (Pt 1000)

Sensor type	Pt 1000
Standards/regulations	DIN EN 60751
Attachment point	2 sensors for the DC contacts

Dimensions

Vehicle charging inlet

Dimensional drawing	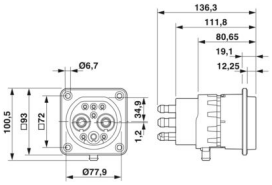
Width	93 mm
Height	93 mm
Depth	136.3 mm

Bore dimensions

Width	72 mm
Height	72 mm
Depth	72 mm

Material specifications

Color (Housing)	black (9005)
Color (Mating face)	black (9005)
Material (Housing)	Plastic
Material (Contact surface)	Silver

Cable/line

Cable length	2 m
Cable type	Single wires

Single-core wires for DC

Cable length	2 m
Cable structure	2 x 35 mm²
Single wire, material	Silicone
Single wire, color	OG
External cable diameter	14.10 mm ±0.3 mm
Cable resistance	≤ 0.527 Ω/km

Single-core wire for PE

Cable length	2 m
Cable structure	1 x 25 mm²
Single wire, material	Silicone
Single wire, color	GN/YE

External cable diameter	8.60 mm ±0.1 mm
Cable resistance	≤ 0.743 Ω/km

Single-core wires for locking actuator

Cable length	1 m
Cable structure	4 x 0.5 mm²
Single wire, material	PVC
Single wire, color	BU/RD, BU/GN, BU/YE, BU/BN
External cable diameter	1.60 mm ±0.20 mm
Cable resistance	≤ 37.1 Ω/m

Single-core wires for Pt 1000 temperature sensors

Cable length	1 m
Cable structure	3 x 0.5 mm²
Single wire, material	PVC
Single wire, color	BN
	GN
	YE
External cable diameter	1.60 mm ±0.20 mm
Cable resistance	≤ 37.1 Ω/m

Single-core wires for communication

Cable length	1 m
Cable structure	2 x 0.5 mm²
Single wire, material	PVC
Single wire, color	BK
	WH
External cable diameter	1.60 mm ±0.20 mm
Cable resistance	≤ 37.1 Ω/m

Mechanical properties

Mechanical data

Insertion/withdrawal cycles	> 10000
Insertion force	< 100 N
Withdrawal force	< 100 N

Environmental and real-life conditions

Ambient conditions

Degree of protection (Vehicle charging inlet)	IP55 (plugged in; when plugged in and ready to operate, the degree of protection is only ensued if both plug-in components are original products from Phoenix Contact or suitable standard-compliant products)
	IP67 (Inner area of vehicle charging inlet)
Ambient temperature (operation)	-40 °C ... 40 °C (60°C, maximum (current reduction required, observe the DC contact temperature limit value of 90°C))
Altitude	4000 m (above sea level)

Standards and regulations

Standards

Standards/regulations	GB/T 20234.3-2015

Mounting

Mounting type	Front and rear mounting (0 to 90 degree frontal inclination possible)
Mounting hole diameter	6.70 mm (ø)
Fixing screws	M6
Screws included in the scope of delivery	none

Drawings

Dimensional drawing

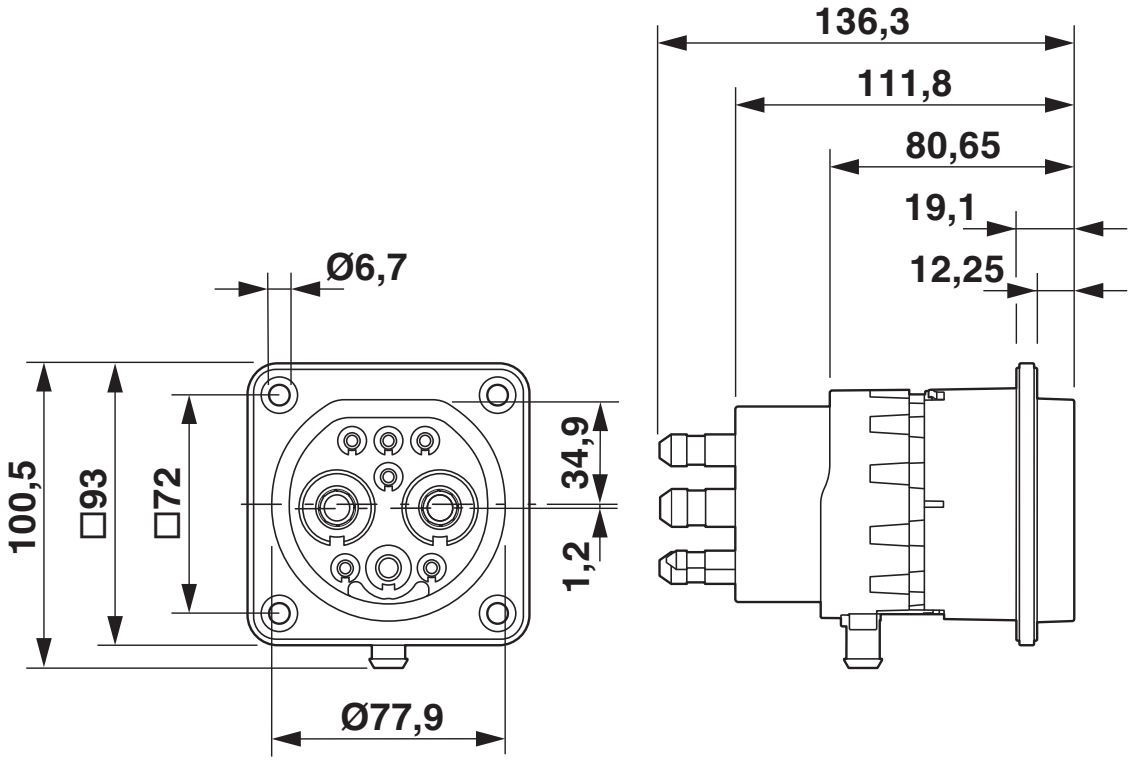

Dimensional drawing

Connection diagram

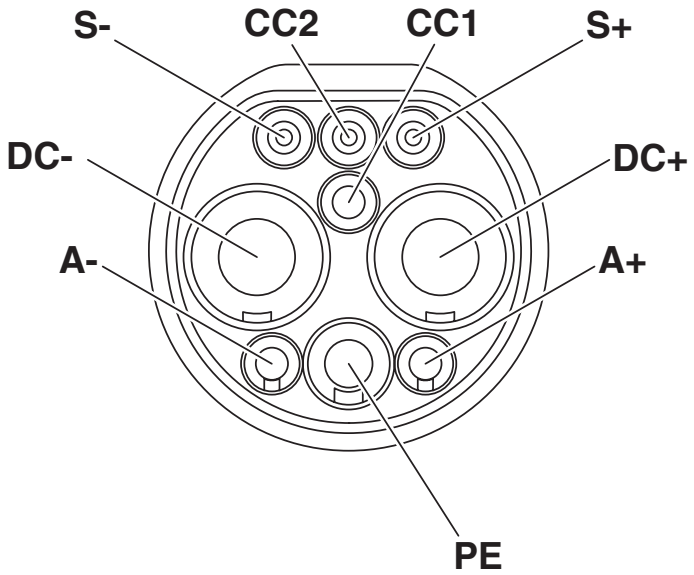

Pin assignment of vehicle charging inlets

Connection diagram

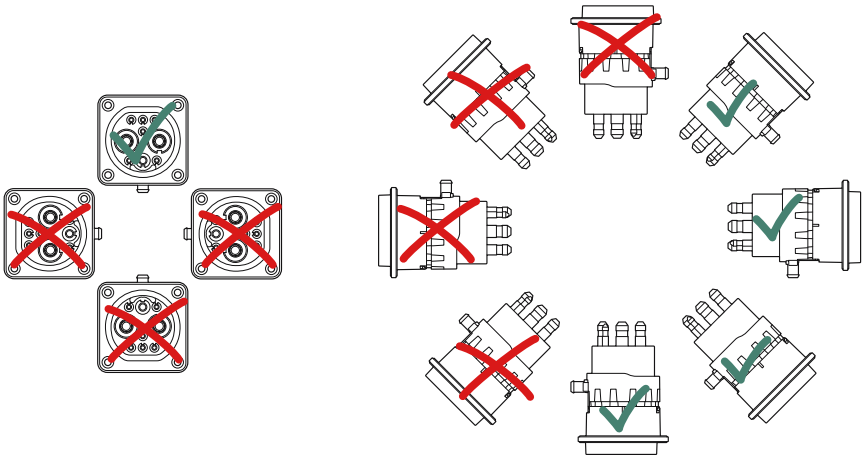

Installation positions

Schematic diagram

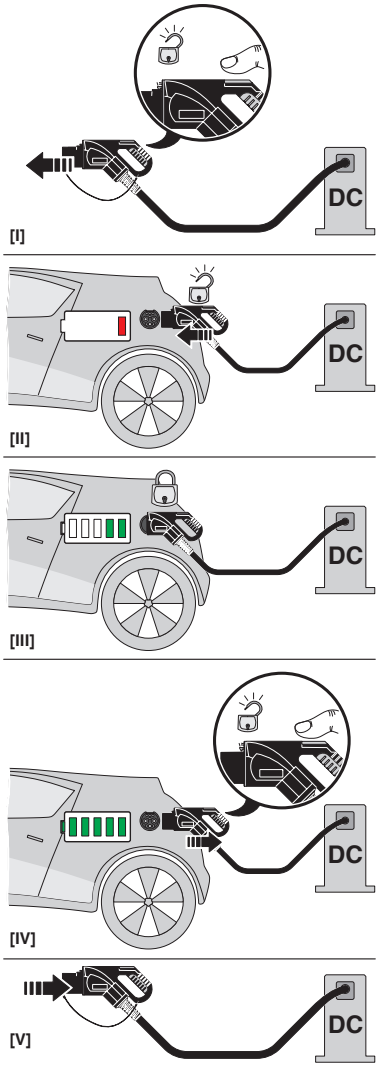

Operating instructions

Classifications

ECLASS

ECLASS-13.0	27144706
ECLASS-15.0	27144706

ETIM

ETIM 10.0	EC002898

UNSPSC

UNSPSC 21.0	39121800

Environmental product compliance

EU RoHS

Fulfills EU RoHS substance requirements	Yes
Exemption	6(c), 7(c)-I

China RoHS

Environment friendly use period (EFUP)	EFUP-50
	An article-related China RoHS declaration table can be found in the download area for the respective article under "Manufacturer declaration". For all articles with EFUP-E, no China RoHS declaration table issued and required.

EU REACH SVHC

REACH candidate substance (CAS No.)	2-ethylhexyl 10-ethyl-4,4-dioctyl-7-oxo-8-oxa-3,5-dithia-4-stannatetradecanoate (DOTE)(CAS: 15571-58-1)
	Lead(CAS: 7439-92-1)
	Bis(2-(2-methoxyethoxy)ethyl)ether(CAS: 143-24-8)
SCIP	cc8bce8d-5315-4728-b0fb-4a22ef1382c5

Phoenix Contact 2026 © - all rights reserved
https://www.phoenixcontact.com

PHOENIX CONTACT B.V.
Hengelder 56 6902 PA Zevenaar
Postbus 246 6900 AE Zevenaar
(0316) 59 17 20
sales@phoenixcontact.nl