SF-PZ 1-80 S-VDE - Screwdriver

1212695

https://www.phoenixcontact.com/nl/products/1212695

Please be informed that the data shown in this PDF document is generated from our online catalog. Please find the complete data in the user documentation. Our general terms of use for downloads are valid.



Screwdriver, crosshead PZ (lasered), insulated, size: PZ 1 x 80, 2-component handle, with non-slip grip

Your advantages

- Screwdrivers for Phillips screws with Pozidriv and Phillips Recess screw head
- VDE approval

Commercial data

Item number	1212695
Packing unit	10 pc
Minimum order quantity	1 pc
Sales key	BH3146
Product key	BH3146
GTIN	4046356716581
Weight per piece (including packing)	59,99 g
Weight per piece (excluding packing)	59,99 g
Customs tariff number	82054000
Country of origin	CZ

Technical data

Notes

Environmental Product Compliance

California Proposition 65	Further information on California's prop. 65 is available under "Downloads" in the manufacturer's declaration

Product properties

Type	Phillips

Connection data

Output	Phillips/Pozidriv

Dimensions

Dimensional drawing	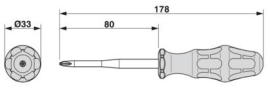
Width	33 mm
Blade width	3 mm
Blade height	80 mm
Length	178 mm
Wrench size	0 mm
Wrench size for mounting	0 mm

Material specifications

Material	alloyed tool steel

Drawings

Dimensional drawing

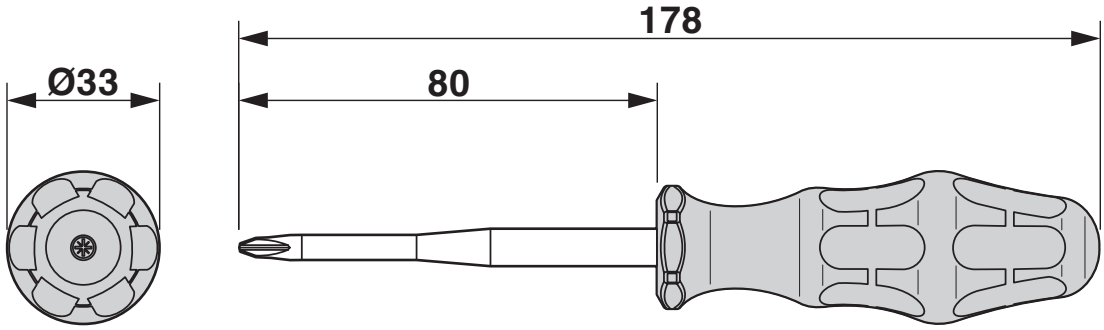

Approvals

To download certificates, visit the product detail page: https://www.phoenixcontact.com/nl/products/1212695

EAC
Approval ID: RU C-DE.AI30.B.01750

VDE Zeichengenehmigung
Approval ID: 40032921

EAC
Approval ID: 7500525.13.12.00701

Classifications

ECLASS

ECLASS-13.0	21040406
ECLASS-15.0	21040406

ETIM

ETIM 10.0	EC000144

UNSPSC

UNSPSC 21.0	27111700

Environmental product compliance

EU RoHS

Fulfills EU RoHS substance requirements	Not applicable, No electrical and electronic equipment (EEE), cannot be used in EEE

EU REACH SVHC

REACH candidate substance (CAS No.)	No substance above 0.1 wt%

Phoenix Contact 2026 © - all rights reserved
https://www.phoenixcontact.com

PHOENIX CONTACT B.V.
Hengelder 56 6902 PA Zevenaar
Postbus 246 6900 AE Zevenaar
(0316) 59 17 20
sales@phoenixcontact.nl