Housing - HC-STA-B48-BWSC-EMC-AL

1424864

https://www.phoenixcontact.com/pc/products/1424864

Please be informed that the data shown in this PDF document is generated from our Online Catalog. Please find the complete data in the user documentation. Our General Terms of Use for Downloads are valid.

Panel mounting base B48, with single locking latch, material: Die-cast aluminum, salt water resistant, protective cover material: PA, height: 39.4 mm, cable gland: none, protective cover: yes, Standard, with flat gasket

Your advantages

- good shielding in the event of electromagnetic interference

Commercial Data

Item number	1424864
Packing unit	1 pc
Minimum order quantity	1 pc
Product Key	BF7APB
Catalog Page	Page 645 (C-2-2019)
GTIN	4055626382692
Weight per Piece (including packing)	622 g
Weight per Piece (excluding packing)	622 g
Customs tariff number	85389099
Country of origin	CN

Technical Data

Product properties

Type	B48
Product type	Housing with locking latch
Application	Standard
Housing type	Panel mounting base
Protective cover	yes
Locking type	with single locking latch
Pg screw connection	none

Dimensions

Dimensional drawing	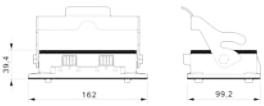
Width	99.2 mm
Height	39.4 mm
Length	162 mm
Drill hole distance, horizontal	148 mm
Drill hole distance, vertical	70 mm
Hole diameter	6.5 mm

Installation dimensions

Width of the assembly cutout	81 mm
Length of the assembly cutout	117 mm

Material specifications

Color	gray aluminum
Flammability rating according to UL 94	V0 (Interlock)
	V0 (Protective cover)
Sealing material	NBR, conductive (profile gasket)
	NBR, conductive (Flat gasket)
Housing surface material	uncoated
Material, protective cover	PA
Locking latch material	Polyamide
Impact strength	IK08
Housing material	Die-cast aluminum, salt water resistant

Ambient conditions

Degree of protection	IP66 (with locked protective cover)
	IP67 (when plugged in)
	4 (UL 50e)

Degree of protection	4X (UL 50e)
	12 (UL 50e)
Impact strength	IK08
Ambient temperature (operation)	-40 °C ... 125 °C

Mechanical properties

Mechanical data

Locking type	Latch

Drawings

Dimensional drawing

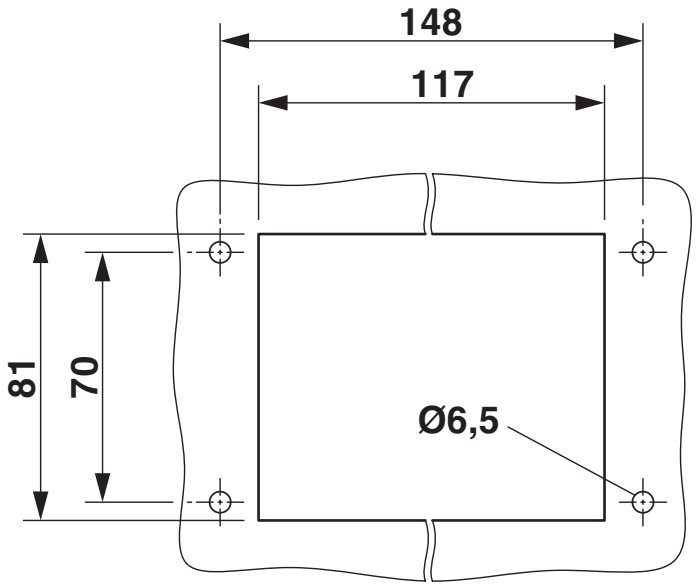

Mounting cutout

Dimensional drawing

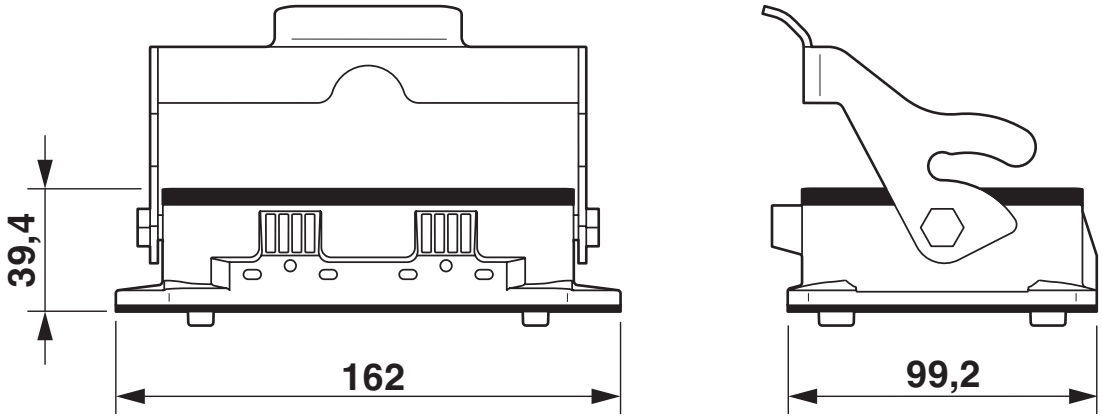

Dimensional drawing

Approvals

DNV
Approval ID: TAE000037S

EAC
Approval ID: RU C-DE.BL08.B.00511

Classifications

ECLASS

ECLASS-9.0	27440202
ECLASS-10.0.1	27440202
ECLASS-11.0	27440202

ETIM

ETIM 8.0	EC000437

UNSPSC

UNSPSC 21.0	31261500

Environmental Product Compliance

China RoHS	Environmentally friendly use period: unlimited = EFUP-e
	No hazardous substances above threshold values

Phoenix Contact 2022 © - all rights reserved
https://www.phoenixcontact.com

PHOENIX CONTACT GmbH & Co. KG
Flachsmarktstraße 8
D-32825 Blomberg
+49 (0) 5235-3 00
info@phoenixcontact.com