G2D140-AC30-18

AC centrifugal fan

forward-curved, dual-intake

with housing (flange), for rail applications

ebm-papst Mulfingen GmbH & Co. KG
Bachmühle 2 · D-74673 Mulfingen
Phone +49 7938 81-0
Fax +49 7938 81-110
info1@de.ebmpapst.com
www.ebmpapst.com

Limited partnership · Headquarters Mulfingen
Amtsgericht (court of registration) Stuttgart · HRA 590344

General partner Elektrobau Mulfingen GmbH · Headquarters Mulfingen
Amtsgericht (court of registration) Stuttgart · HRB 590142

Nominal data

Type	**G2D140-AC30-18**
Motor	**M2D068-DF**

Nominal voltage	VAC	460	460	460	460
Wiring		Δ	Y	Δ	Y
Frequency	Hz	50	50	60	60
Method of obtaining data		ml	ml	ml	ml
Valid for approval/standard		CE	CE	CE	CE
Speed (rpm)	min^{-1}	2400	1750	2500	1650
Power consumption	W	135	80	185	92
Current draw	A	0.2	0.11	0.25	0.12
Min. back pressure	Pa	165	82	178	73
Min. back pressure	in. wg	0.66	0.33	0.71	0.29
Min. ambient temperature	°C	-25	-25	-25	-25
Max. ambient temperature	°C	80	90	80	90

ml = Max. load · me = Max. efficiency · fa = Free air · cs = Customer specification · ce = Customer equipment
Subject to change

AC centrifugal fan

forward-curved, dual-intake

with housing (flange), for rail applications

Technical description

Weight	3.4 kg
Fan size	140 mm
Rotor surface	Painted black
Impeller material	Sheet steel, galvanized
Housing material	Die-cast aluminum
Guard grille material	Hot-dip galvanized and spot-welded net
Direction of rotation	Clockwise, viewed toward rotor
Degree of protection	IP44; installation- and position-dependent as per EN 60034-5
Insulation class	"F"
Moisture (F) / Environmental (H) protection class	F5
Max. permitted ambient temp. for motor (transport/storage)	+ 80 °C
Min. permitted ambient temp. for motor (transport/storage)	- 40 °C
Installation position	Any
Condensation drainage holes	On rotor side
Mode	S1
Motor bearing	Ball bearing
Touch current according to IEC 60990 (measuring circuit Fig. 4, TN system)	< 0.75 mA
Motor protection	Thermal overload protector (TOP) with basic insulation
With cable	Axial
Protection class	I (with customer connection of protective earth)
Conformity with standards	EN 45545-2 + A1:2015; EN 60335-1; CE

ebm-papst Mulfingen GmbH & Co. KG · Bachmühle 2 · D-74673 Mulfingen · Phone +49 (0) 7938 81-0 · Fax +49 (0) 7938 81-110 · info1@de.ebmpapst.com · www.ebmpapst.com

AC centrifugal fan

forward-curved, dual-intake

with housing (flange), for rail applications

Product drawing

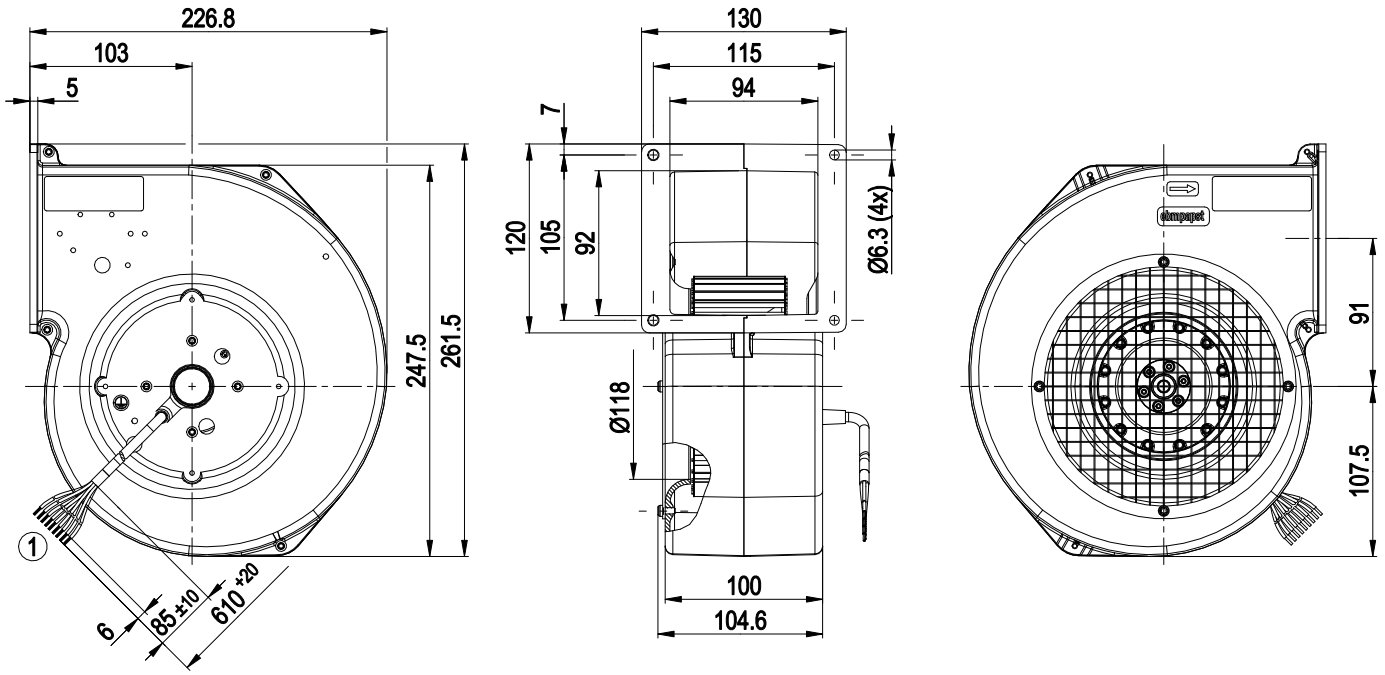

1	Cable silicone 9G 0.5 mm², 9x crimped splices

ebm-papst Mulfingen GmbH & Co. KG · Bachmühle 2 · D-74673 Mulfingen · Phone +49 (0) 7938 81-0 · Fax +49 (0) 7938 81-110 · info1@de.ebmpapst.com · www.ebmpapst.com

AC centrifugal fan

forward-curved, dual-intake

with housing (flange), for rail applications

Connection diagram

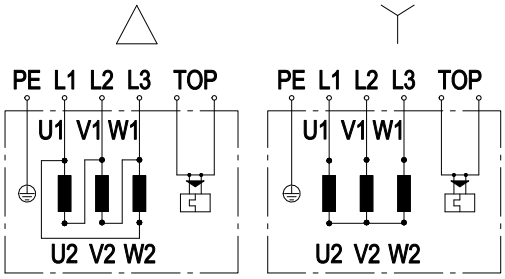

Note: Change of rotation direction by reversing two phases

Δ	Delta connection	Y	Star connection	L1	black
L2	blue	L3	brown	U1	black
V1	blue	W1	brown	U2	green
V2	white	W2	yellow	TOP	2x gray
PE	green/yellow				

ebm-papst Mulfingen GmbH & Co. KG · Bachmühle 2 · D-74673 Mulfingen · Phone +49 (0) 7938 81-0 · Fax +49 (0) 7938 81-110 · info1@de.ebmpapst.com · www.ebmpapst.com

AC centrifugal fan

forward-curved, dual-intake

with housing (flange), for rail applications

Curves: Air performance 50 Hz

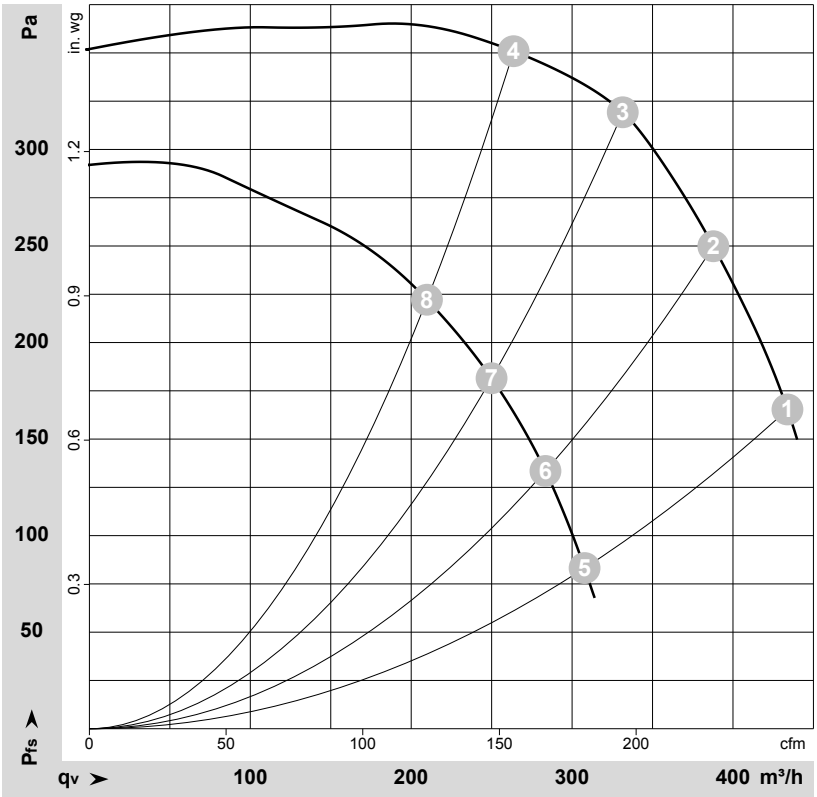

ρ = 1.15 kg/m³ ± 2 %

Measurement: LU-55670-1
Measurement: LU-55672-1

Air performance measured according to ISO 5801 installation category A. For detailed information on the measurement setup, contact ebm-papst. Intake sound level: Sound power level according to ISO 13347 / sound pressure level measured at 1 m distance from fan axis. The values given are valid under the specified measuring conditions and may vary due to conditions of installation. For deviations from the standard configuration, the parameters have to be checked on the installed unit.

Measured values

	Wired	U	f	n	P_e	I	q_V	p_{fs}	q_V	p_{fs}
		V	Hz	min^{-1}	W	A	m^3/h	Pa	cfm	in. wg
1	Δ	460	50	2400	135	0.20	435	165	255	0.66
2	Δ	460	50	2485	122	0.18	390	250	230	1.00
3	Δ	460	50	2570	106	0.16	330	320	195	1.28
4	Δ	460	50	2665	88	0.15	265	350	155	1.41
5	Y	460	50	1750	80	0.11	310	82	180	0.33
6	Y	460	50	1835	76	0.10	285	134	165	0.54
7	Y	460	50	1975	69	0.09	250	182	145	0.73
8	Y	460	50	2130	62	0.08	210	222	125	0.89

Wired = Wiring · U = Power supply · f = Frequency · n = Speed (rpm) · P_e = Power consumption · I = Current draw · q_V = Air flow · p_{fs} = Pressure increase

ebm-papst Mulfingen GmbH & Co. KG · Bachmühle 2 · D-74673 Mulfingen · Phone +49 (0) 7938 81-0 · Fax +49 (0) 7938 81-110 · info1@de.ebmpapst.com · www.ebmpapst.com

AC centrifugal fan

forward-curved, dual-intake

with housing (flange), for rail applications

Curves: Air performance 60 Hz

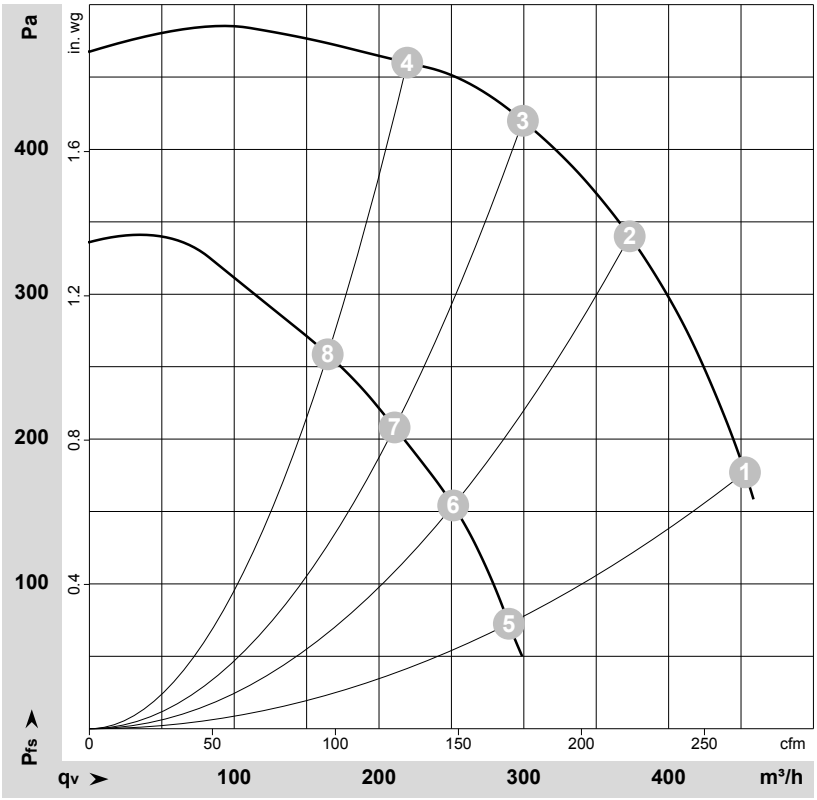

ρ = 1.15 kg/m³ ± 2 %

Measurement: LU-55669-1
Measurement: LU-55671-1

Air performance measured according to ISO 5801 installation category A. For detailed information on the measurement setup, contact ebm-papst. Intake sound level: Sound power level according to ISO 13347 / sound pressure level measured at 1 m distance from fan axis. The values given are valid under the specified measuring conditions and may vary due to conditions of installation. For deviations from the standard configuration, the parameters have to be checked on the installed unit.

Measured values

	Wired	U	f	n	P_e	I	q_V	p_{fs}	q_V	p_{fs}
		V	Hz	min^{-1}	W	A	m^3/h	Pa	cfm	in. wg
1	Δ	460	60	2500	185	0.25	455	178	265	0.71
2	Δ	460	60	2710	157	0.22	375	340	220	1.36
3	Δ	460	60	2895	130	0.18	300	420	175	1.69
4	Δ	460	60	3070	105	0.15	220	460	130	1.85
5	Y	460	60	1650	92	0.12	290	73	170	0.29
6	Y	460	60	1845	86	0.11	250	156	150	0.63
7	Y	460	60	2080	78	0.10	210	208	125	0.84
8	Y	460	60	2330	69	0.09	165	259	95	1.04

Wired = Wiring · U = Power supply · f = Frequency · n = Speed (rpm) · P_e = Power consumption · I = Current draw · q_V = Air flow · p_{fs} = Pressure increase

ebm-papst Mulfingen GmbH & Co. KG · Bachmühle 2 · D-74673 Mulfingen · Phone +49 (0) 7938 81-0 · Fax +49 (0) 7938 81-110 · info1@de.ebmpapst.com · www.ebmpapst.com