RTY & RTP SERIES

32307665
Issue B

Hall-effect Rotary Position Sensors

DESCRIPTION

The RTY Series and RTP Series Hall-effect Rotary Position Sensors provide non-contact sensing in harsh transportation and industrial applications at a competitive cost.

- **RTY Series:** These shaft activated products are available in two versions: an integral shaft with or without a lever. The lever may allow customers to reduce the number of mechanical linkages required for their applications, which may reduce the cost of the overall customer solution.
- **RTP Series:** Takes non-contact sensing to the next level by separating the magnet from the sensor body. The absence of the actuator shaft removes the wear and tear on the bearings caused by radial forces. A choice of a bare or a housed magnet is available.

These products use a magnetically biased, Hall-effect integrated circuit (IC) to sense rotary movement of the actuator over a set operating range. Rotation of the actuator changes the magnet's position relative to the IC. The resulting flux density change is converted to a linear output.

The IC, together with conditioning and protection circuitry, is sealed in an IP69K-qualified rugged package for durability in most harsh environments.

Eight operating ranges from 50° to 360° are tolerant to over-travel and allow use in most common applications. Low voltage and high voltage versions cover an input voltage range of 4.5 Vdc to 30 Vdc.

Honeywell's industry-leading capabilities in research and development provide the customer with known quality and support.

FEATURES

- True, non-contact operation
- 35 M cycle product life (RTY Series); unlimited rotation (RTP Series)
- Solid-state Hall-effect technology
- Rugged IP69K-sealed package with integral connector
- Automotive-grade EMI/EMC testing, integrated reverse polarity, and short circuit protection
- Industry-standard AMP termination, 32 mm mounting pitch, North American or European pinout styles, and compact package
- Eight operating ranges up to 360°

POTENTIAL APPLICATIONS

Transportation

- Position and movement detection (pedals, throttles, gear shift, levers, steering, linkages, and hitches) in trucks, buses, off-road vehicles, cranes, and industrial/construction/agricultural vehicles and equipment)
- Suspension/kneeling position (buses, trucks)
- Tilt/trim position (boat engines, tilling equipment)

Industrial

- Valve control
- HVAC damper control
- Irrigation equipment pivot control

Honeywell

HALL-EFFECT ROTARY POSITION SENSORS
RTY AND RTP SERIES

TABLE 1. ELECTRICAL SPECIFICATIONS

CHARACTERISTIC	RTY SERIES		RTP SERIES	
	LV (Low Voltage)	HV (High Voltage)	LV (Low Voltage)	HV (High Voltage)
Supply voltage	5 ±0.5 Vdc	10 Vdc to 30 Vdc	5 ±0.5 Vdc	10 Vdc to 30 Vdc
Supply current: normal during output to ground short	 20 mA max. 25 mA max.	 32 mA max. 47 mA max.	 20 mA max. 25 mA max.	 32 mA max. 47 mA max.
Output: standard inverted	 0.5 Vdc to 4.5 Vdc ratiometric 4.5 Vdc to 0.5 Vdc ratiometric	 0.5 Vdc to 4.5 Vdc non-ratiometric 4.5 Vdc to 0.5 Vdc non-ratiometric	 0.5 Vdc to 4.5 Vdc ratiometric 4.5 Vdc to 0.5 Vdc ratiometric	 0.5 Vdc to 4.5 Vdc non-ratiometric 4.5 Vdc to 0.5 Vdc non-ratiometric
Output signal delay	4 ms typ.			
Overvoltage protection	10 Vdc	—	10 Vdc	—
Reverse polarity protection	-10 Vdc	-30 Vdc	-10 Vdc	-30 Vdc
Output to ground short circuit protection	continuous			
Resolution	12 bit			
Output load resistance (pull down to ground)	10 kOhm typ.			
EMI: radiated immunity	100 V/m per ISO11452-2 from 200 MHz to 1000 MHz		100 V/m per ISO11452-2 from 200 MHz to 1000 MHz	
conducted immunity	100 mA BCI per ISO11452-4 from 1 MHz to 200 MHz	100 mA BCI per ISO11452-4 from 1 MHz to 400 MHz	100 mA BCI per ISO11452-4 from 1 MHz to 200 MHz	100 mA BCI per ISO11452-4 from 1 MHz to 400 MHz
EMC	exceeds CE, UKCA requirements			

TABLE 2. MECHANICAL SPECIFICATIONS

CHARACTERISTIC	RTY SERIES		RTP SERIES	
	LV (Low Voltage)	HV (High Voltage)	LV (Low Voltage)	HV (High Voltage)
Expected life	35 M cycles		infinite rotation	
Air gap: bare magnet actuator housed magnet actuator misalignment	 — — —		 3,00 mm ±0.5 mm [0.12 in ±0.02 in] 2,00 mm ±0.5 mm [0.08 in ±0.02 in] 2,00 mm [0.08 in] max.	
Material: shaft magnet sensor housing housed magnet overmold sensor/housed magnet bushing sensor bushing	 stainless steel — PBT plastic — — stainless steel		 — NdFeB PBT plastic PPS plastic brass —	
Mating connector	AMP Superseal 282087-1			
Mechanical end stop	no			
Mounting screw sizes: sensor to mounting surface lever to mounting surface housed magnet actuator to actuator mounting shaft	 non-magnetic, stainless steel M5 screws and 10 mm [0.39 in] OD washers non-magnetic stainless steel M6 screws, —		 non-magnetic, stainless steel M4 X 0.7 screws and 8 mm [0.31 in] OD washers — non-magnetic, stainless steel M3 X 0.5 plain cup point set screws	
Approvals	CE, UKCA			

TABLE 3. ENVIRONMENTAL SPECIFICATIONS

CHARACTERISTIC	RTY SERIES		RTP SERIES	
	LV (Low Voltage)	HV (High Voltage)	LV (Low Voltage)	HV (High Voltage)
Operating temperature range	-40 °C to 125 °C [-40 °F to 257 °F]			
Ingress protection	IP69K			
Media compatibility	heavy transportation fluids			
Shock[1]	50 G peak			
Vibration[1]	20 G peak			
Salt fog	concentration 5% ±1% for 240 hr per SAE J1455 Section 4.3.3.1 (at 5.0 Vdc, 38 °C [100 F °])		bare magnet: 96 hr for as per ASTM B117 housed magnet: 240 hr per ASTM B117	

[1] Does not apply RTY Series sensor shaft with lever.

CAUTION
ELECTROSTATIC SENSITIVE DEVICES
DO NOT OPEN OR HANDLE EXCEPT AT A STATIC FREE WORKSTATION
ESD SENSITIVITY: CLASS 2

NOTICE
Ferrous material or magnet material more than 300 Gauss within 10 mm [0.39 in] from sensor boundary may impact sensor performance.

Figure 1. All Available Configurations

Series	Actuator Type	Series	Actuator Type
RTY	Integral shaft without lever	RTP	Separate bare magnet
	Integral shaft with lever		Separate housed magnet

HALL-EFFECT ROTARY POSITION SENSORS
RTY AND RTP SERIES

FIGURE 2. PRODUCT NOMENCLATURE

RTY Series

For example, **RTY050LVEAA** defines an RTY Series Hall-Effect Rotary Position Sensor, 50° (±25°) sensing range angle, 5 Vdc supply voltage, European pinout style, 4.5 Vdc (left), 0.5 Vdc (right) output type, shaft without lever actuation type

RTY — Series

RTY Series Hall-Effect Rotary Postion Sensor with Integral Actuator

050 — Sensing Range Angle

- **050** 50° (±25°)
- **060** 60° (±30°)
- **070** 70° (±35°)
- **090** 90° (±45°)
- **120** 120° (±60°)
- **180** 180° (±90°)
- **270** 270° (±135°)
- **360** 360° (±180°)

LV — Supply Voltage

- **LV** 5 Vdc
- **HV** 10 Vdc to 30 Vdc

E — Pinout Style

- **E** European:
  pin 1 = GND
  pin 2 = Vcc
  pin 3 = output
- **N** North American:
  pin 1 = Vcc
  pin 2 = GND
  pin 3 = output

A — Output Type

- **A** Standard:
  0.5 Vdc (left), 4.5 Vdc (right)
- **B** Inverted:
  4.5 Vdc (left), 0.5 Vdc (right)

A — Actuator Type

- **X** Shaft without lever

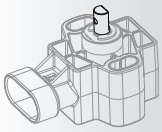

- **A** Shaft with lever

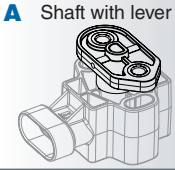

RTP Series

For example, **RTP050LVEBX** defines an RTP Series Hall-Effect Rotary Position Sensor, 50° (±25°) sensing range angle, 5 Vdc supply voltage, European pinout style, inverted 4.5 Vdc (left), 0.5 Vdc (right) output type, bare magnet actuator type

RTP — Series

RTP Series Hall-Effect Rotary Postion Sensor with External Actuator

050 — Sensing Range Angle

- **050** 50° (±25°)
- **060** 60° (±30°)
- **070** 70° (±35°)
- **090** 90° (±45°)
- **120** 120° (±60°)
- **180** 180° (±90°)
- **270** 270° (±135°)
- **350** 350° (±175°)
- **360** 360° (±180°)[1]

LV — Supply Voltage

- **LV** 5 Vdc
- **HV** 10 Vdc to 30 Vdc

E — Pinout Style

- **E** European:
  pin 1 = GND
  pin 2 = Vcc
  pin 3 = output
- **N** North American:
  pin 1 = Vcc
  pin 2 = GND
  pin 3 = output

B — Output Type

- **A** Standard:
  0.5 Vdc (left), 4.5 Vdc (right)
- **B** Inverted:
  4.5 Vdc (left), 0.5 Vdc (right)

X — Actuator Type

- **X** Bare magnet

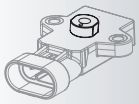

- **A** Housed magnet (carrier type "A")[2]

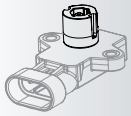

[1] 360° Sensing Range Angle available upon request.
[2] Customized housed magnet actuators available upon request.

FIGURE 3. RTY SERIES MOUNTING DIMENSIONS (FOR REFERENCE ONLY: MM [IN.])

Sensor without lever

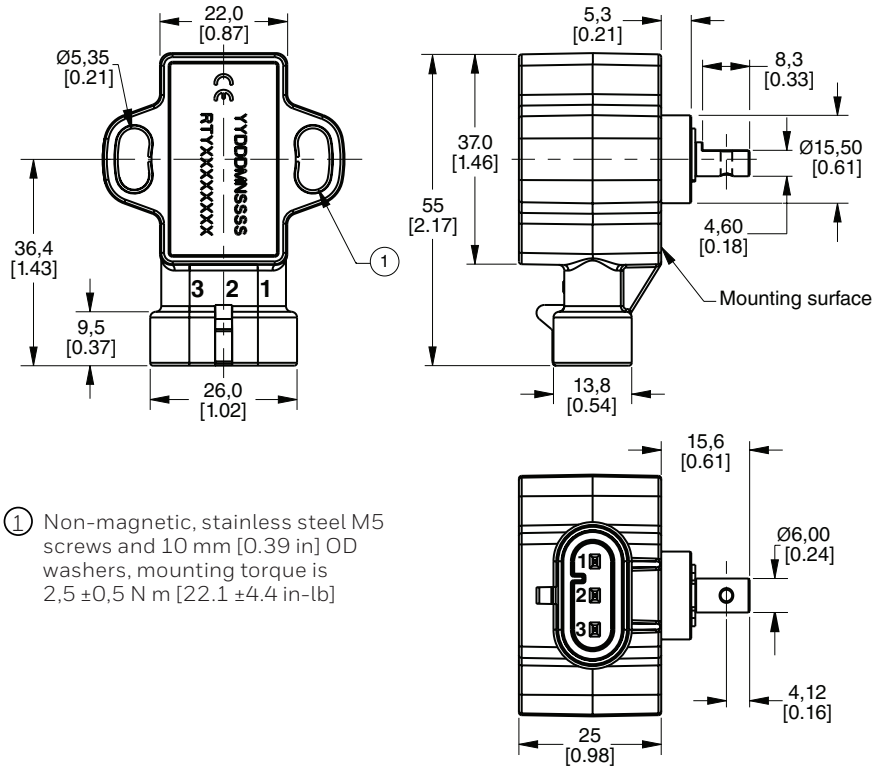

1 Non-magnetic, stainless steel M5 screws and 10 mm [0.39 in] OD washers, mounting torque is 2,5 ±0,5 N m [22.1 ±4.4 in-lb]

Sensor with lever

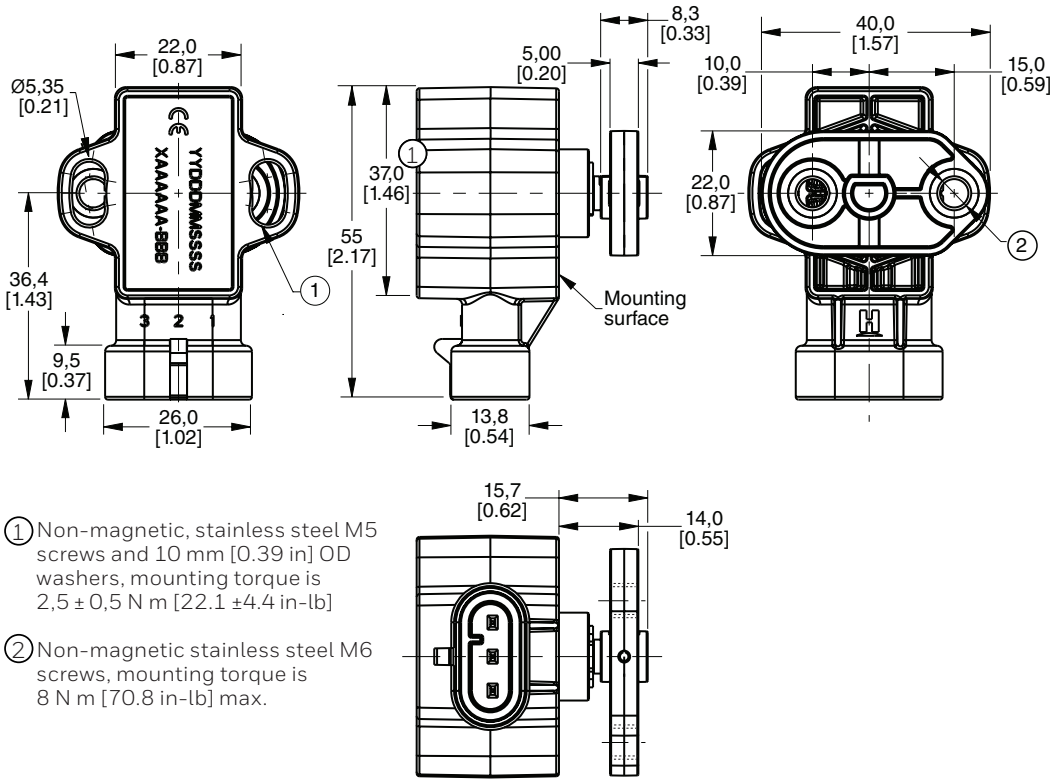

1 Non-magnetic, stainless steel M5 screws and 10 mm [0.39 in] OD washers, mounting torque is 2,5 ± 0,5 N m [22.1 ±4.4 in-lb]

2 Non-magnetic stainless steel M6 screws, mounting torque is 8 N m [70.8 in-lb] max.

Output diagram

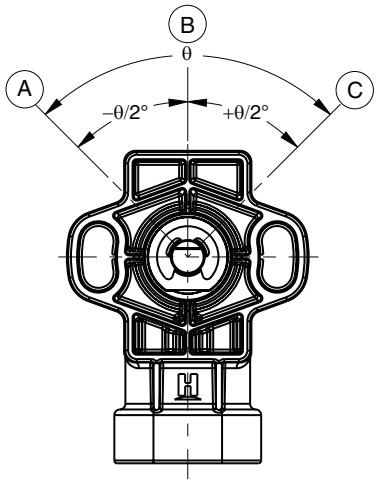

Standard Output

A = Left output: 0.5 Vdc
B = Zero reference
C = Right output: 4.5 Vdc

Inverted Output

A = Left output: 4.5 Vdc
B = Zero reference
C = Right output: 0.5 Vdc

FIGURE 4. RTP SERIES MOUNTING DIMENSIONS (FOR REFERENCE ONLY: MM [IN].)

Sensor with bare magnet actuator

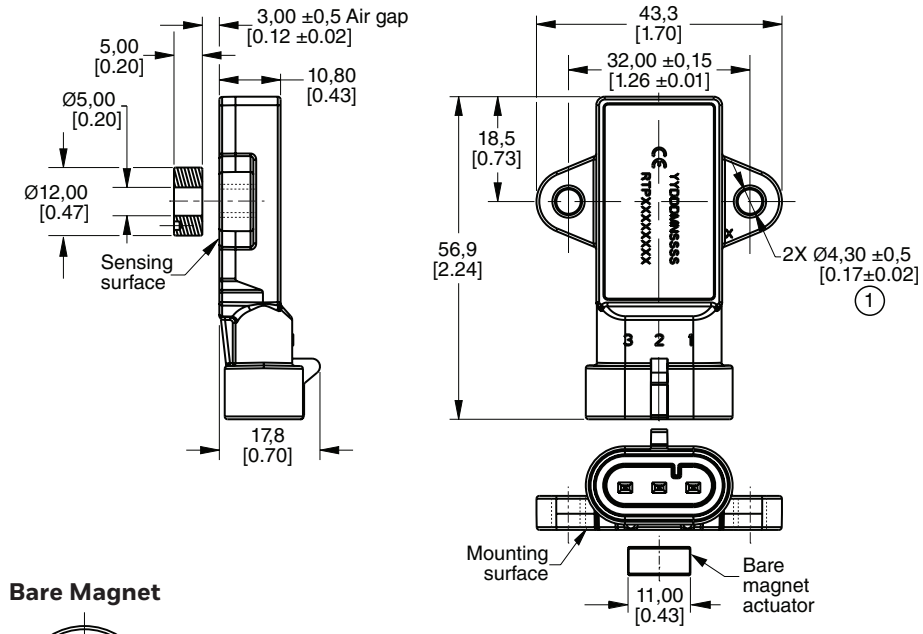

Bare Magnet

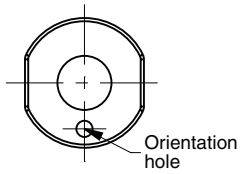

1 Non-magnetic, stainless steel M4 X 0.7 screws and 8 mm [0.39 in] OD washers, torque is 2,0 ±0,2 N m [17.7 ±1.8 in-lb].

Output Diagram

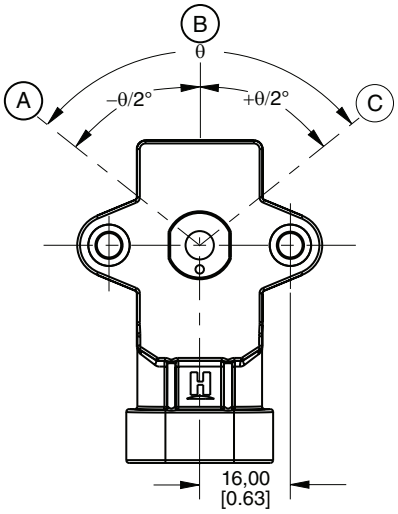

Standard Output

A = Left output: 0.5 Vdc
B = Zero reference
C = Right output: 4.5 Vdc

Inverted Output

A = Left output: 4.5 Vdc
B = Zero reference
C = Right output: 0.5 Vdc

Sensor with housed magnet actuator

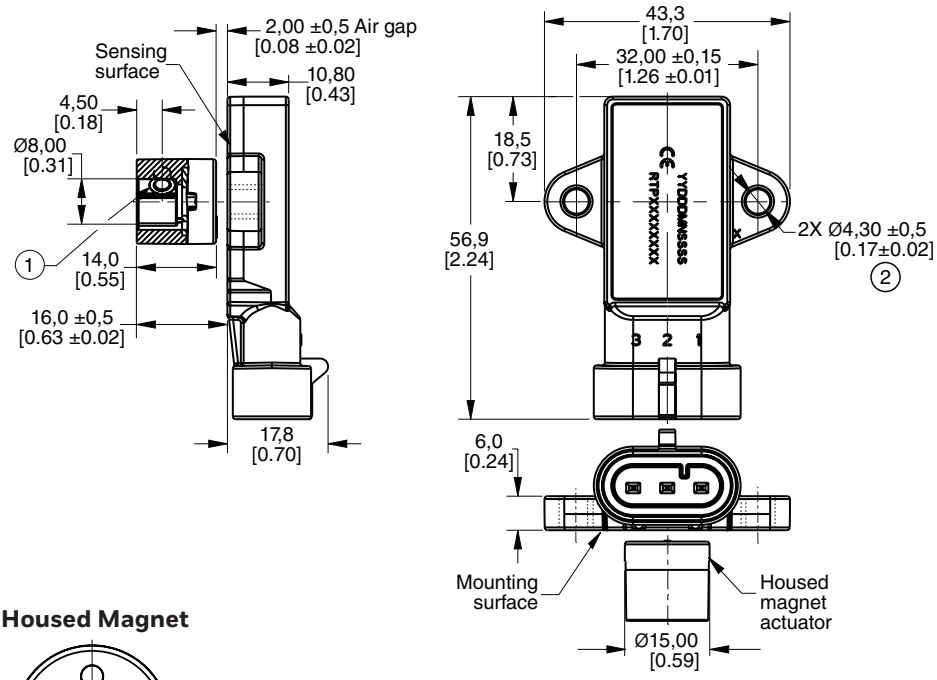

Housed Magnet

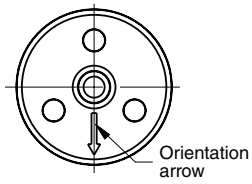

1 Non-magnetic, stainless steel M3 X 0.5 plain cup point set screws, torque is 0,5 N m to 0,6 N m [4.42 in-lb to 5.31 in-lb]

2 Non-magnetic, stainless steel M4 X 0.7 screws and 8 mm [0.31 in] OD washers, torque is 2,0 ±0,2 N m [17.7 ±1.8 in-lb].

Output Diagram

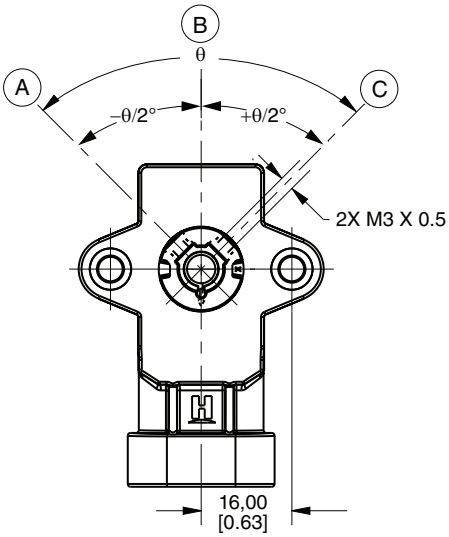

Standard Output

A = Left output: 0.5 Vdc
B = Zero reference
C = Right output: 4.5 Vdc

Inverted Output

A = Left output: 4.5 Vdc
B = Zero reference
C = Right output: 0.5 Vdc

TABLE 4 RTY SERIES FUNCTIONAL CHARACTERISTICS[1]

CHARACTERISTIC			STANDARD OUTPUT	INVERTED OUTPUT
Sensing Angle	Linearity Error[2]	Accuracy Error[3]		
50° (±25°)	±1.0%	±1.6%	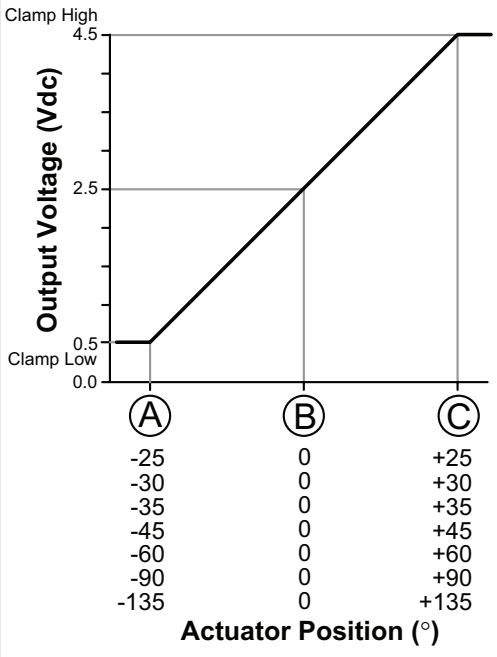	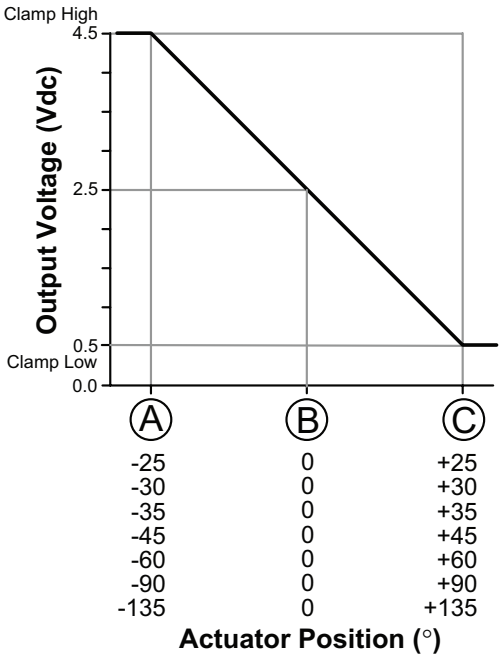
60° (±35°)				
70° (±35°)				
90° (±45°)				
120° (±60°)				
180° (±90°)				
270° (±135°)				
360° (±180°)			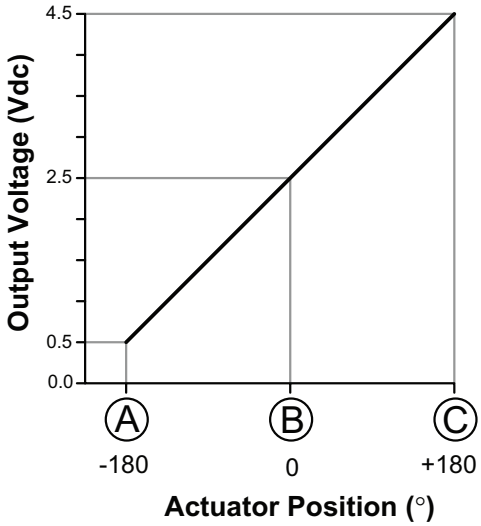	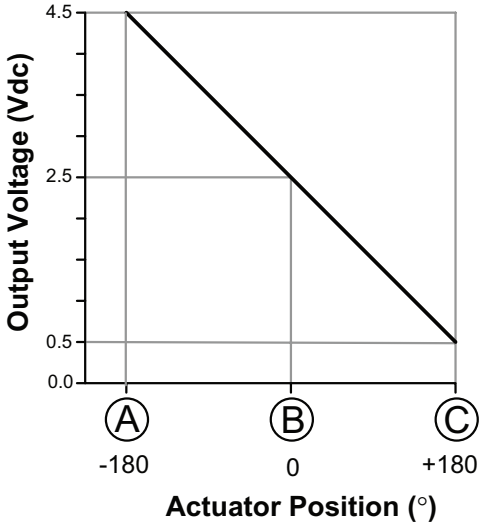

[1] See Figure 3 for references to Ⓐ Ⓑ Ⓒ

[2] Linearity error is the deviation of the measured value from the best fit line and is the quotient of the measured output ratio deviation from the best fit line at the measured temperature to the best fit line output ratio span at the measured temperature.

[3] Accuracy is measured as a deviation from the index line, where the index line is defined as the line with the ideal slope and sensor output voltage corrected at 0° position for its ideal value at 25 °C ±5 °C. Accuracy is valid only when the sensor output is correct at 0° position for its ideal value in the application.

TABLE 5. RTP SERIES FUNCTIONAL CHARACTERISTICS[1]

CHARACTERISTIC			STANDARD OUTPUT	INVERTED OUTPUT
Sensing Angle	Linearity Error[2]	Accuracy Error		
50° (±25°) 60° (±35°) 70° (±35°) 90° (±45°) 120° (±60°) 180° (±90°) 270° (±135°) 350° (±175°)	±2.0%	—	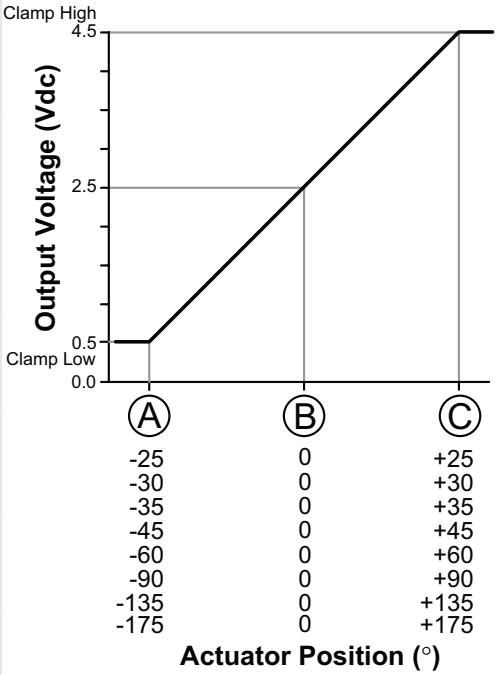	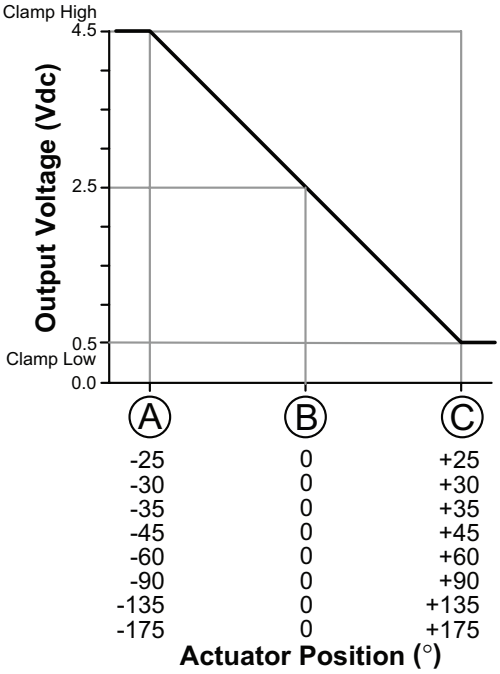
360° (±180°)			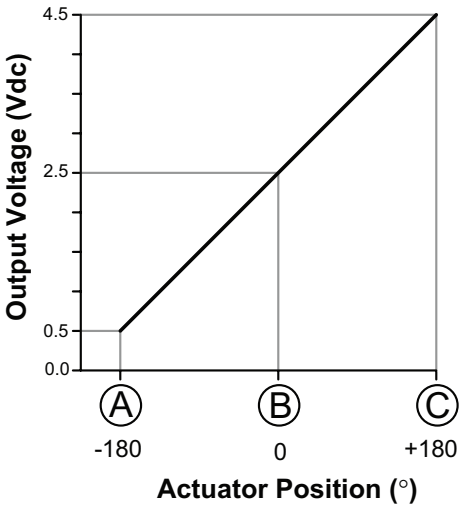	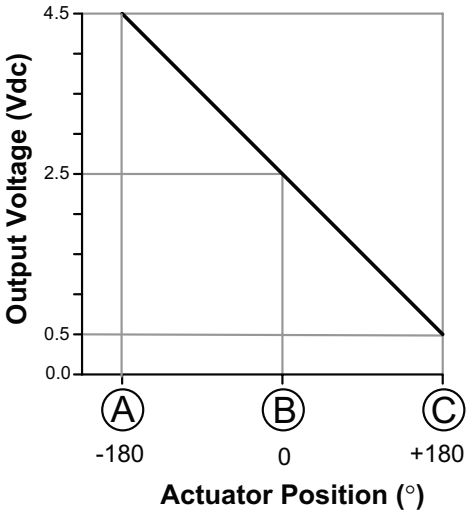

[1] See Figure 4 for references to Ⓐ Ⓑ Ⓒ

[2] Linearity error is the deviation of the measured value from the best fit line and is the quotient of the measured output ratio deviation from the best fit line at the measured temperature to the best fit line output ratio span at the measured temperature.

ADDITIONAL MATERIALS

The following associated literature is available at sensing.honeywell.com:

- Product Range Guide
- Product Line Guide
- Product Installation Instructions
- Application notes

WARRANTY/REMEDY

Honeywell warrants goods of its manufacture as being free of defective materials and faulty workmanship during the applicable warranty period. Honeywell's standard product warranty applies unless agreed to otherwise by Honeywell in writing; please refer to your order acknowledgment or consult your local sales office for specific warranty details. If warranted goods are returned to Honeywell during the period of coverage, Honeywell will repair or replace, at its option, without charge those items that Honeywell, in its sole discretion, finds defective. **The foregoing is buyer's sole remedy and is in lieu of all other warranties, expressed or implied, including those of merchantability and fitness for a particular purpose. In no event shall Honeywell be liable for consequential, special, or indirect damages.**

While Honeywell may provide application assistance personally, through our literature and the Honeywell web site, it is buyer's sole responsibility to determine the suitability of the product in the application.

Specifications may change without notice. The information we supply is believed to be accurate and reliable as of this writing. However, Honeywell assumes no responsibility for its use.

⚠ WARNING
PERSONAL INJURY

DO NOT USE these products as safety or emergency stop devices or in any other application where failure of the product could result in personal injury.

Failure to comply with these instructions could result in death or serious injury.

⚠ WARNING
MISUSE OF DOCUMENTATION

- The information presented in this product sheet is for reference only. Do not use this document as a product installation guide.
- Complete installation, operation, and maintenance information is provided in the instructions supplied with each product.

Failure to comply with these instructions could result in death or serious injury.

Honeywell
Advanced Sensing Technologies
830 East Arapaho Road
Richardson, TX 75081
sps.honeywell.com/ast

32307665-EN | B | 01/22
© 2022 Honeywell International Inc.

Honeywell