MICRO SWITCH
FREEPORT, ILLINOIS, U.S.A.
A DIVISION OF HONEYWELL
FED. MFG. CODE 91929

SWITCH - ENCLOSED

CATALOG LISTING
LSQ081

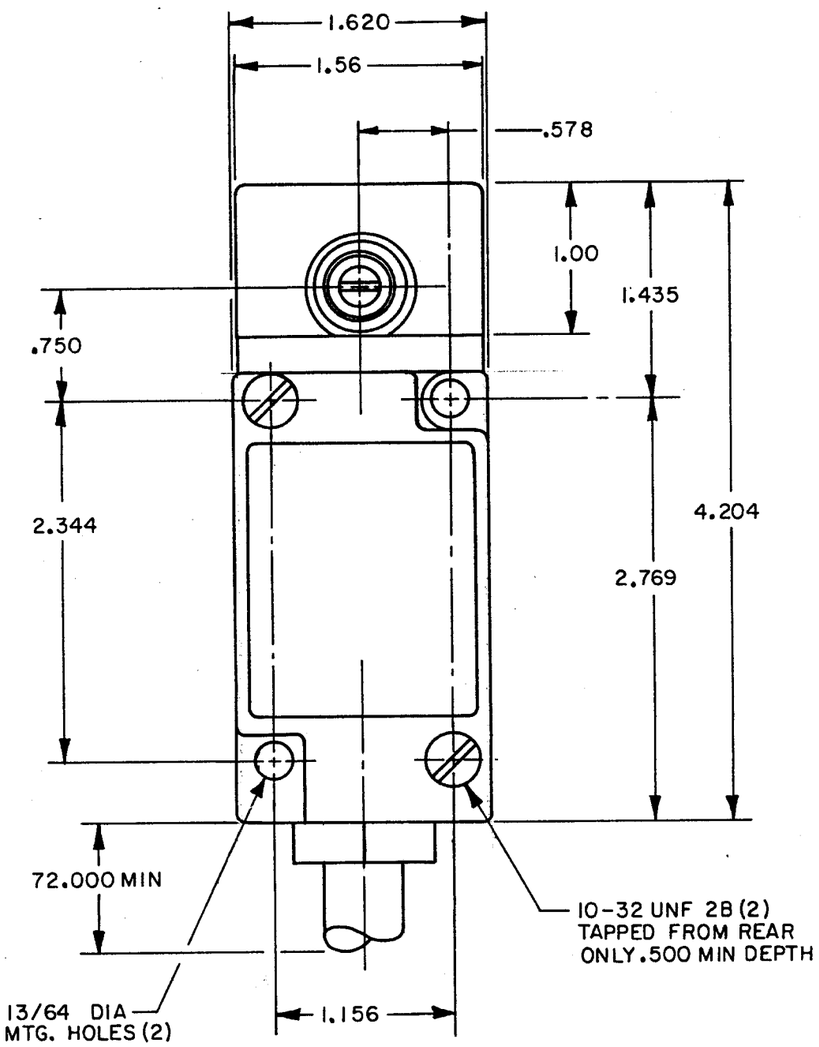

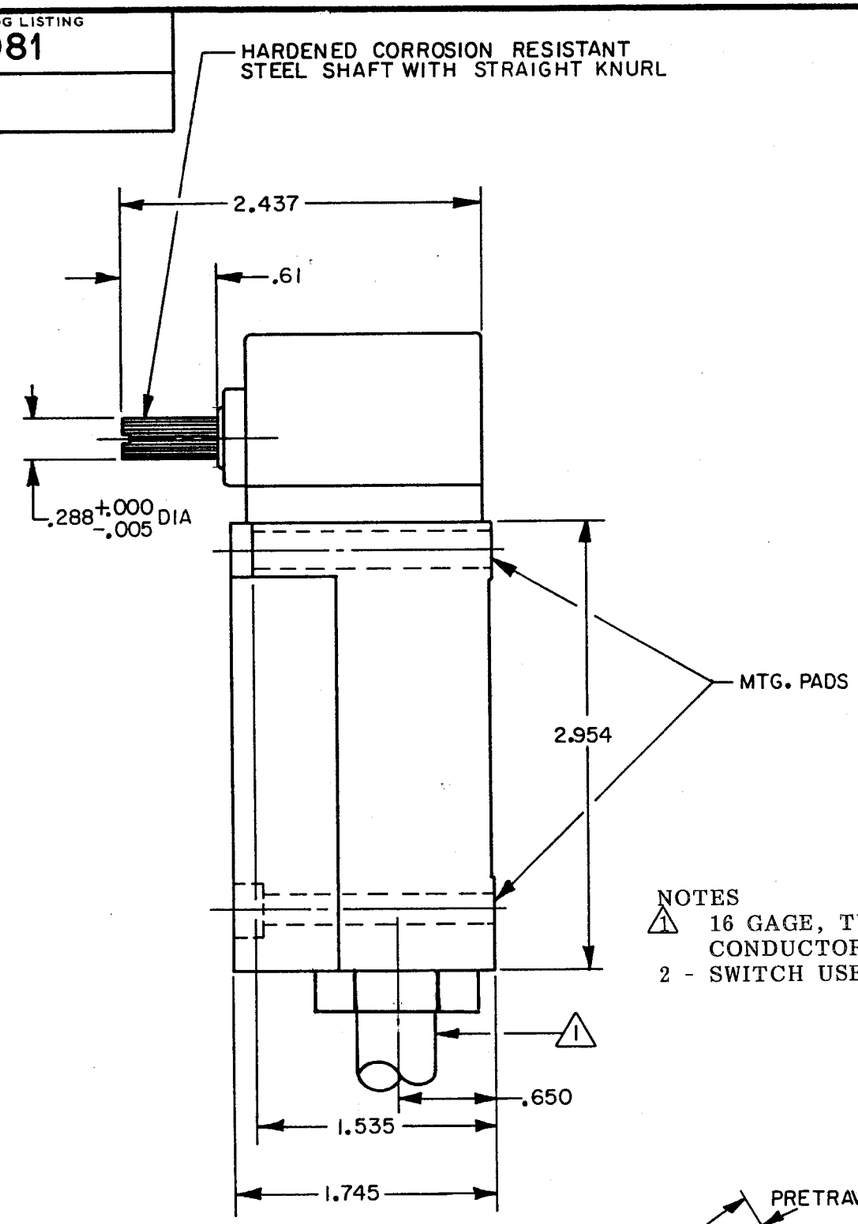

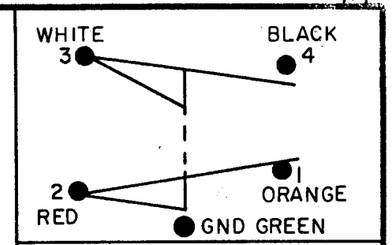

CIRCUIT DIAGRAM

NOTES
1. 16 GAGE, TYPE SJTO 5 CONDUCTOR CABLE
2 - SWITCH USES VITON SEALS

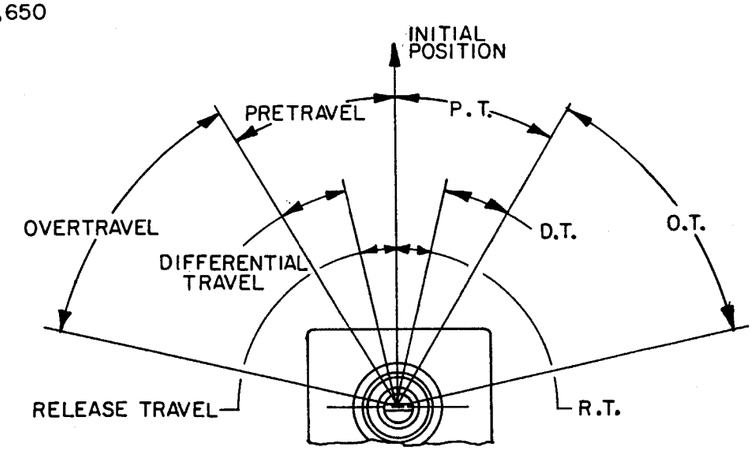

CHARACTERISTICS	
OPERATING TORQUE	4 IN LBS MAX
FULL TRAVEL TORQUE	4 IN LBS MAX
PRETRAVEL	15° MAX
DIFFERENTIAL TRAVEL	5° MAX
OVERTRAVEL	60° MIN
TOTAL TRAVEL	75° REF

ELECTRICAL DATA
CONTACT ARRANGEMENT

THIS DRAWING COVERS A PROPRIETARY ITEM AND IS THE PROPERTY OF MICRO SWITCH, A DIVISION OF HONEYWELL. THIS DRAWING IS NOT TO BE COPIED OR USED WITHOUT THE APPROVAL OF MICRO SWITCH.

SCALE FULL
DO NOT SCALE PRINT

TOLERANCES
APPLY TO DESIGN UNITS. CONVERSIONS ARE ONLY FOR REFERENCE. UNLESS NOTED, TOLERANCES ARE ±

	DIM. mm	TOL. mm/in	DIM. in	TOL. mm/in
NO PLACES	X	1/.04		
ONE PLACE	X.X	0.4/.016	X.X	0.8/.03
TWO PLACES	X.XX	0.15/.006	X.XX	0.38/.015
THREE PLACES			X.XXX	0.13/.005
ANGLES				

DESIGN UNITS SI METRIC ☐ US CUSTOMARY ■

THIRD ANGLE PROJECTION

WEIGHT

LSQ081 | M | DRAWING NUMBER | ISSUE 4 | RELEASE NO. PR-11885 | REPLACES

REVISIONS
A PR 11885 S L B 31 JAN 83
B CO 54082 S L B 7 NOV 83
C C079940 JAK 31 MAR 95

DRAWN S L B 28 JAN 83 | CHECK C E B 31 JAN 83 | CHECK | CHECK

FO-52851-B