MICRO SWITCH
a Honeywell Division
FED. MFG. CODE 91929

LEVER, SWITCH ACTUATOR

CATALOG LISTING
GLZ6 SERIES CHART 1

THIS DRAWING COVERS A PROPRIETARY ITEM AND IS THE PROPERTY OF MICRO SWITCH. A DIVISION OF HONEYWELL. THIS DRAWING IS NOT TO BE COPIED OR USED WITHOUT THE APPROVAL OF MICRO SWITCH

CATALOG LISTING	"Y" LENGTH	"Z" LENGTH
GLZ68	304,8 12.00	248,8 9.80

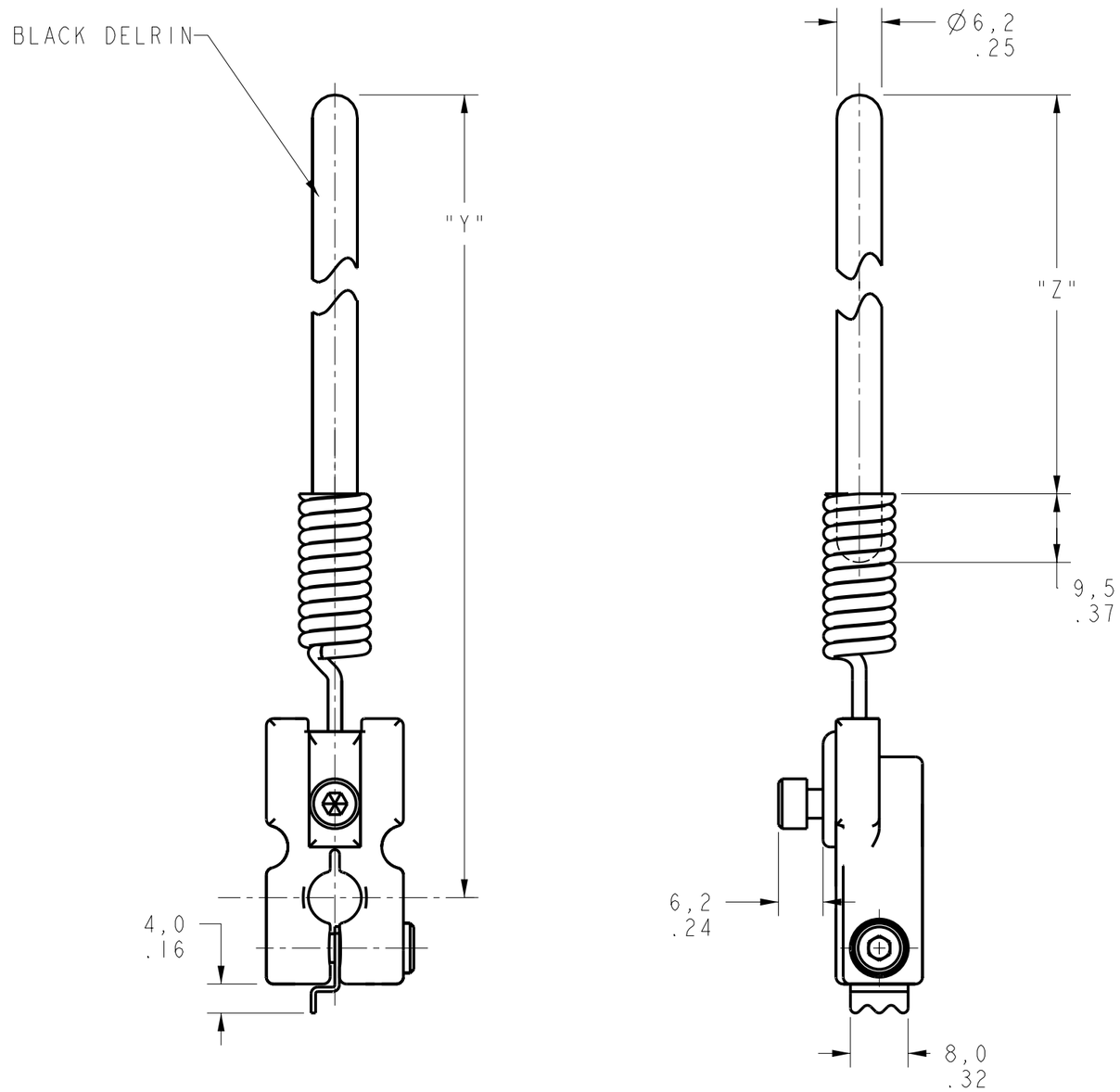

THIRD ANGLE PROJECTION

SCALE FULL

DO NOT SCALE PRINT

TOLERANCES

APPLY TO DESIGN UNITS. CONVERSIONS ARE ONLY FOR REFERENCE. UNLESS NOTED, TOLERANCES ARE ±

	DIM. mm	TOL mm/in	DIM. in	TOL mm/in
NO PLACES	X	1/.04	X.X	0.8/.03
ONE PLACE	X.X	0.4/.016	X.XX	0.38/.015
TWO PLACES	X.XX	0.15/.006	X.XXX	0.13/.005
THREE PLACES				
ANGLES				

DESIGN UNITS SI METRIC [X] US CUSTOMARY [ ]

WEIGHT

ANSI Y14.5M-1982 APPLIES

CATALOG LISTING GLZ6 SERIES CHART 1
PAGE 1 OF 1
RELEASE NO. PR-22268
REPLACES
ISSUE 1
CHECK
CHECK
CHECK
CHECK
REVISIONS
DRAWN GLH 4 NOV 96
PTC/CAD