MICRO SWITCH
FREEPORT, ILLINOIS, U S A
A DIVISION OF HONEYWELL
FED. MFG. CODE 91929

SWITCH-ENCLOSED

CATALOG LISTING
EXH-AR7-R1

THIS DRAWING COVERS A PROPRIETARY ITEM AND IS THE PROPERTY OF MICRO SWITCH, A DIVISION OF HONEYWELL. THIS DRAWING IS NOT TO BE COPIED OR USED WITHOUT THE APPROVAL OF MICRO SWITCH.

M

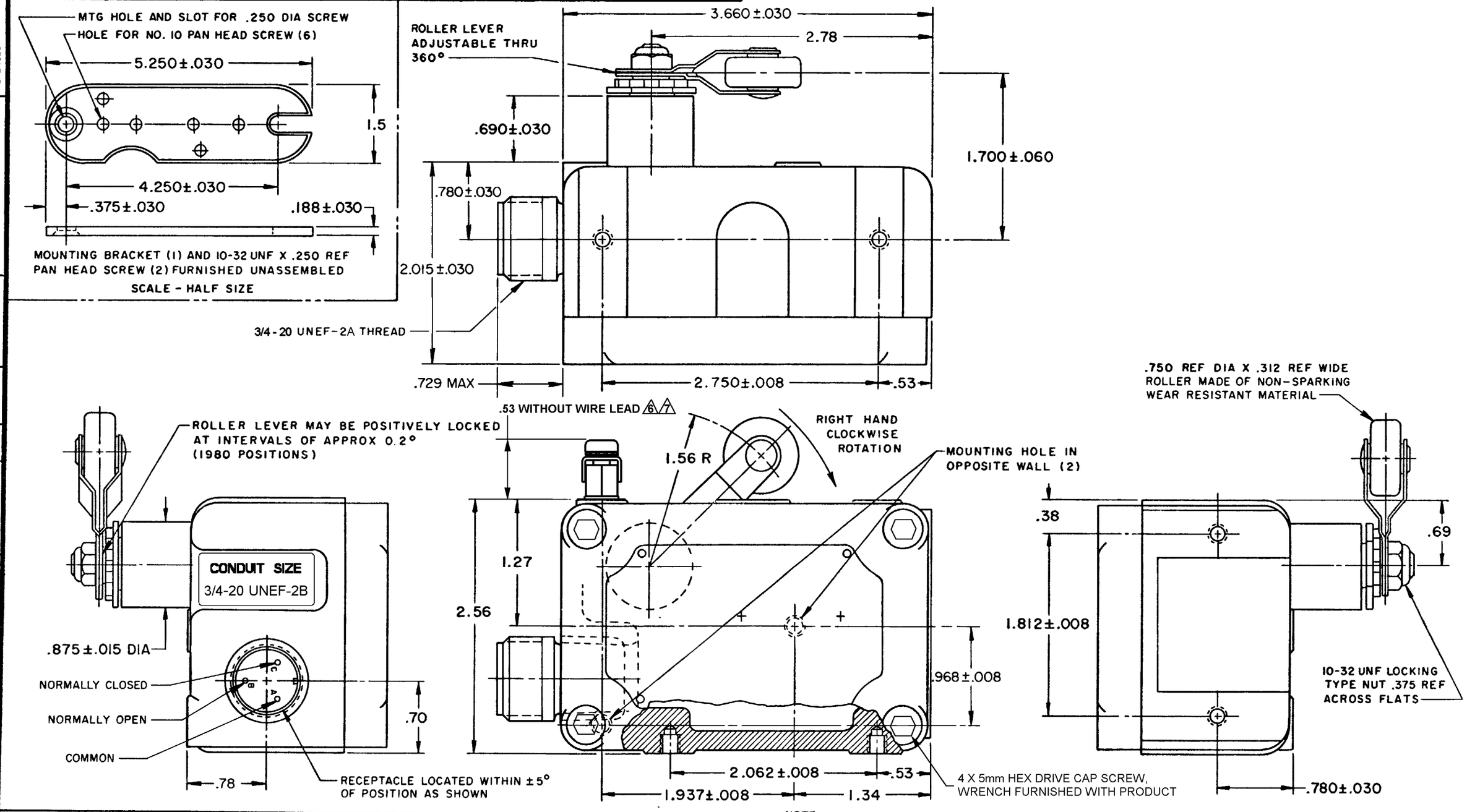

CHARACTERISTICS

OPERATING FORCE	8-24 OZ
RELEASE FORCE	4 OZ MIN
PRETRAVEL	8° (.219 MAX)
DIFFERENTIAL TRAVEL	.025 MAX
DO NOT OVERTRAVEL MORE THAN	25°
SWITCH-BASIC REPLACEMENT	IHS201

ELECTRICAL DATA

CONTACT ARRANGEMENT
S P D T

LINE VOLTAGE	INDUCTIVE LOAD	RESISTIVE LOAD
28 VDC	10 AMP	25 AMP
(SEA LEVEL - 100,000 FT)		
125 VAC	1 AMP	1 AMP
(SEA LEVEL - 70,000 FT)		

SCALE FULL
DO NOT SCALE PRINT
UNLESS OTHERWISE NOTED
DIMENSIONS ARE IN INCHES
TOLERANCES ARE:

ONE PLACE	(.0)	±.030
TWO PLACE	(.00)	±.015
THREE PLACE	(.000)	±.005
ANGLES		±

WEIGHT

NOTE-
1 - MOUNTING SCREW HOLES, 10-32 UNF-2B THREADS X .219 REF DEEP (8)
2 - EXPLOSION PROOF - UNDERWRITERS' LAB. INC. LISTED FOR HAZARDOUS LOCATIONS NEMA 7, CLASS I, GROUPS B,C AND D, NEMA 9, CLASS II, GROUPS E,F AND G.
3 - RECEPTACLE BENDIX PART NO. CB-3101A-14S-7P MATES WITH MS3106A-14S-7S
4 - EUROPEAN HAZARDOUS LOCATIONS DESIGNATION: Ex dIIB + H2 T6 CATAGORY II 2 G
5 - SEAL RATING : NEMA 1
6 - EXTERNAL GROUND SCREW MAY BE ASSEMBLED TO ANY UNUSED MOUNTING SCREW HOLE
7 - ASSEMBLE PROVIDED SPLIT LOCKWASHER BETWEEN GROUND LUG AND HOUSING

EXH-AR7-R1 | M | DRAWING NUMBER | RELEASE NO. PR 3131 | REPLACES | ISSUE 13 14 | 09MAY11 | CMH | CHECK | 28 APR 05 | AK | CHECK | 13 FEB 73 | CHECK | 13 FEB 73 | DRAWN | D A W | 13 FEB 73

REVISIONS

A	PR 3131 DAW 13 FEB 73
B	CO 58360 CSH 9 NOV 85
C	C061381 DAW 23 APR 87
D	C073019 MAM 19 SEP 92
E	0012750 DVM 27 APR 05
F	0017245 KRB 28 NOV 05
G	0059237 LK 03DEC09
H	0077296 SBH 09MAY11

RASTER FO-50378-003