MICRO SWITCH
a Honeywell Division
FED. MFG. CODE 91929

SWITCH - ENCLOSED

CATALOG LISTING
22HR42-12

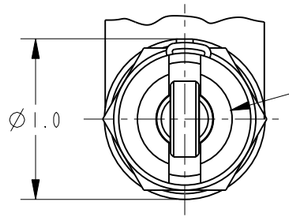

ROLLER GUIDE MAY BE LOCKED IN INCREMENTS OF 45° AZIMUTH
ROLLER GUIDE MAY BE UNSCREWED AND REMOVED FROM BUSHING TO FACILITATE INSTALLATION 5

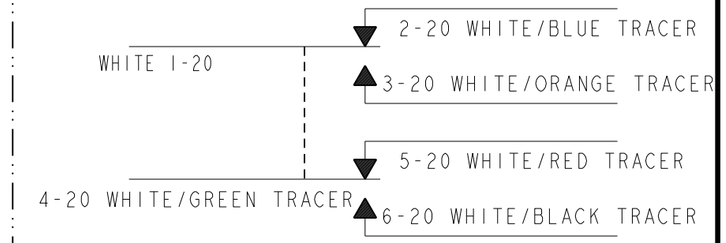

CIRCUIT DIAGRAM

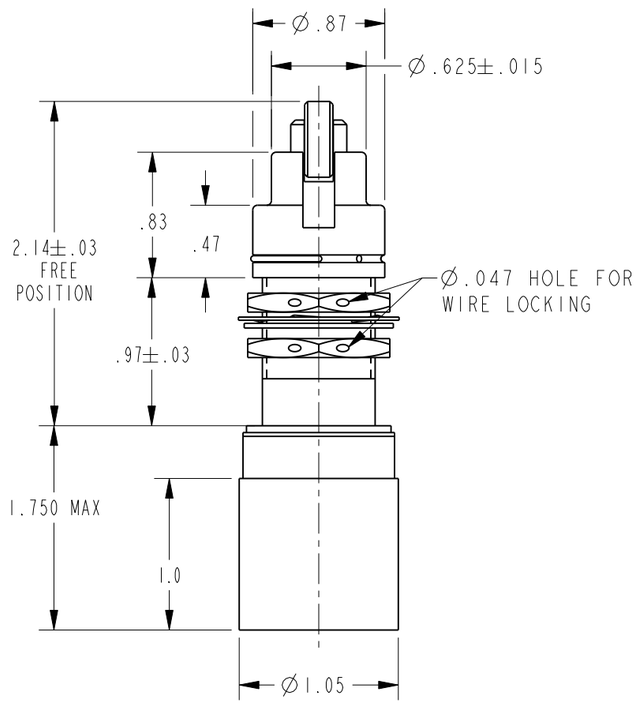

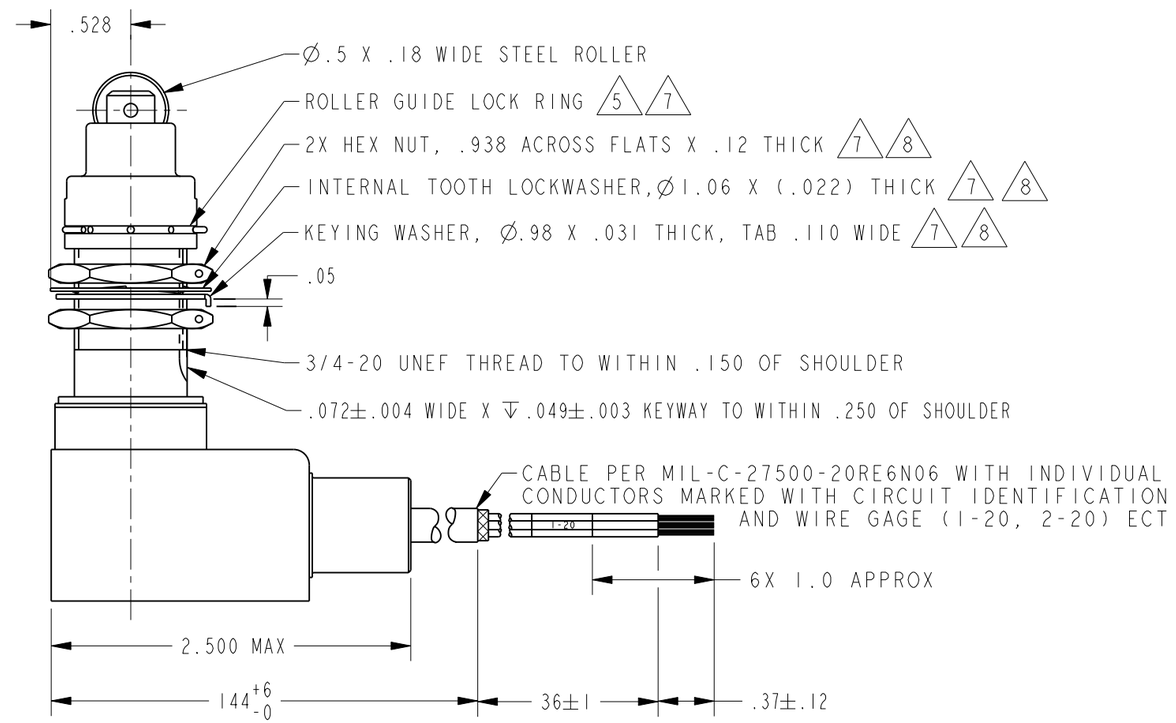

NOTES
1 - ALL EXPOSED METALS ARE CORROSION RESISTANT STAINLESS STEEL OR ARE SUITABLY PROTECTED TO PREVENT CORROSION
2 - THE SWITCH CHAMBER IS SEALED PER MIL-PRF-8805 SYMBOL 5
3 - THE CIRCUIT DIAGRAM, CATALOG LISTING, AND DATE CODE ARE PERMANENTLY MARKED ON THE SWITCH
4 - COINCIDENCE OF THE OPERATE AND RELEASE POINTS: .005 INCHES OF PLUNGER TRAVEL
5 TO ADJUST THE ROLLER DIRECTION: REMOVE THE ROLLER GUIDE LOCK RING, SCREW THE ROLLER GUIDE DOWN AS FAR AS POSSIBLE, THEN UNSCREW TO A DESIRED DIRECTION, AND SECURE BY REPLACING THE ROLLER GUIDE LOCK RING
6 - OPERATING TEMPERATURE RANGE: -85°F TO +392°F
7 HARDWARE FURNISHED ASSEMBLED TO BUSHING
8 REPLACEMENT MOUNTING HARDWARE PACKET: 19PA207-HR

THIS DRAWING COVERS A PROPRIETARY ITEM AND IS THE PROPERTY OF MICRO SWITCH. A DIVISION OF HONEYWELL. THIS DRAWING IS NOT TO BE COPIED OR USED WITHOUT THE APPROVAL OF MICRO SWITCH

THIRD ANGLE PROJECTION

SCALE -

DO NOT SCALE PRINT

UNLESS OTHERWISE SPECIFIED TOLERANCES ARE

ONE PLACE	(.0)	±.030
TWO PLACE	(.00)	±.015
THREE PLACE	(.000)	±.005
ANGLES		±

WEIGHT

CHARACTERISTICS

OPERATING FORCE	6-12 LB
FULL OVERTRAVEL FORCE	35 LB MAX
RELEASE FORCE	5 LB MIN
PRETRAVEL	.050 MAX
DIFFERENTIAL TRAVEL	.015 MAX
OVERTRAVEL	.250 MIN

ELECTRICAL DATA

CONTACT ARRANGEMENT
2X S P D T

LOAD	28 VDC	115 VAC, 60 HZ
RES	5	
IND	2	0.2
MOTOR		

ANSI Y14.5M-1982 APPLIES

CATALOG LISTING 22HR42-12
PAGE 1 OF 1
RELEASE NO. PR-22544
REPLACES -
ISSUE 14
CHECK
REVISIONS

A	PR REL PR24081 TSM 17JUN99	09APR08	
B	C095223 JAF 27AUG99		
C	203053 G J W 10 MAY 01	ASD	
D	203548 GLH 24JUL01	CHECK	
E	207007 T S M 12 DEC 02		
F	207221 TSM 16JAN03	17JUN99	
G	0038194 PK 09APR08		

SAV
CHECK
17JUN99
PTC/CAD 2D
DRAWN TSM 17JUN99