Part Number : 638245400
Product Description : Extraction Tool for CTX280 Receptacle Crimp Terminal for CMX Connector
Series Number : 207121
Status : Active
Product Category : Crimp Presses and Crimp Hand Tools

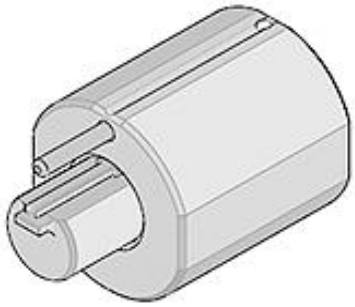

Documents & Resources

Tooling Specifications

ATS-638245400-001.pdf

Product Environment Compliance

Compliance

GADSL/IMDS	Not Relevant
China RoHS	Not Relevant
EU ELV	Not Relevant
Low-Halogen Status	Not Relevant
REACH SVHC	Not Relevant
EU RoHS	Not Relevant

Compliance Statements
- EU RoHS
- REACH SVHC
- Low-Halogen

Industry Documents
- IPC 1752A Class C
- IPC 1752A Class D
- Molex Product Compliance Declaration
- IEC-62474
- chemSHERPA (xml)

Substances of Interest
- PFAS

EU RoHS Certificate of Compliance

Additional Product Compliance Information

Part Details

General

Status	Active
Category	Crimp Presses and Crimp Hand Tools
Series	207121
Description	Extraction Tool for CTX280 Receptacle Crimp Terminal for CMX Connector
Comments	See Tooling Specification (PDF) Above
Function	Extraction
Geographic Area	Global
Level of Automation	Manual
More Detailed Tech Information	toolingsupport@molex.com
Product Name	CTX280,N/A
Tool Type	Extraction Hand Tool
UPC	889056426145
Warranty Disclaimer	CAUTION: Molex tooling crimp specifications are valid only when used with Molex terminals and tooling manufactured by Molex and sold by Molex or authorized distributors ("Molex Tooling"). When using tooling other than Molex Tooling with Molex specific connector systems listed in our ATS documents, the Molex tooling qualification does not apply and the responsibility for full qualification of the connector system is that of the customer. Molex accepts no liability for connector performance or tooling support where tooling other than Molex Tooling is used or where Molex Tooling is modified.

This document was generated on Sep 23, 2025