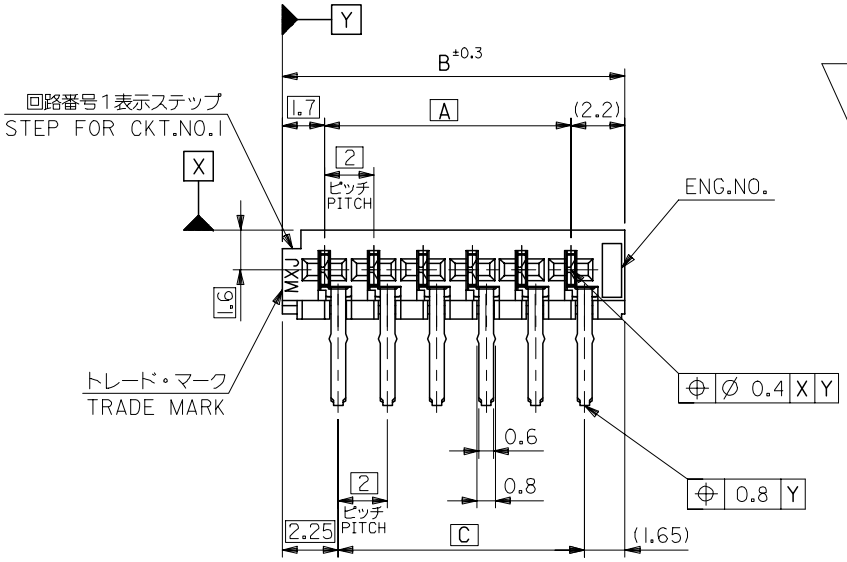

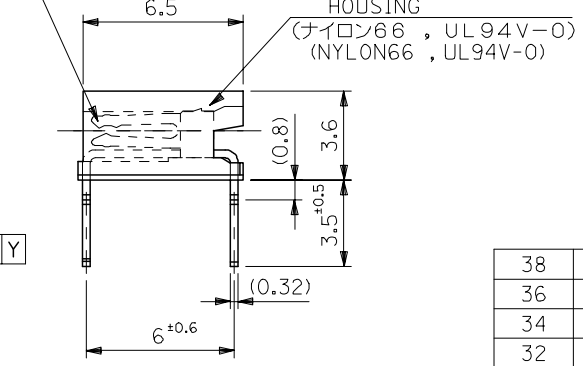

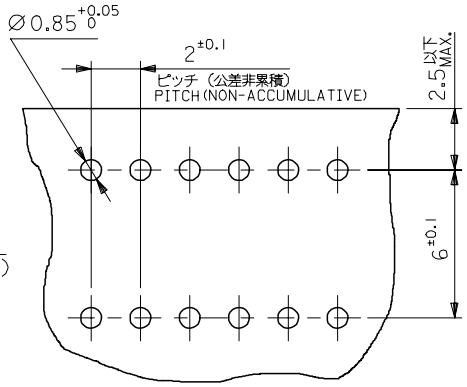

基板取付穴推奨寸法
RECOMMENDED P.C.BOARD HOLE DIM.

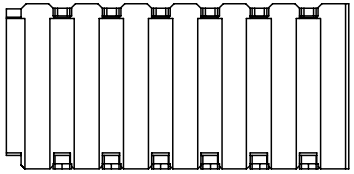

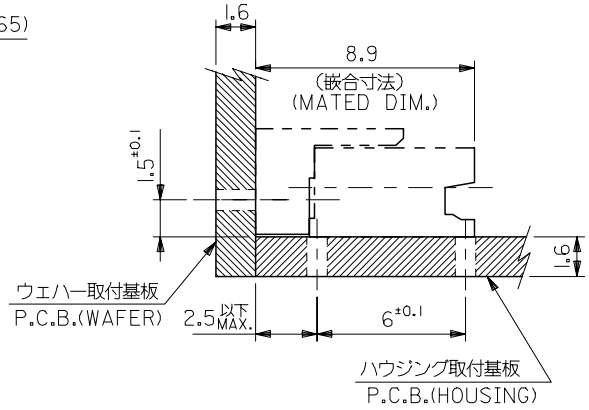

基板取付推奨レイアウト
P.C.BOARD POSITIONING WHEN MATED

38	41.9	38	39-35-2205	5513-20 APB7F	20
36	39.9	36	-2195	-19 APB7F	19
34	37.9	34	-2185	-18 APB7F	18
32	35.9	32	-2175	-17 APB7F	17
30	33.9	30	-2165	-16 APB7F	16
28	31.9	28	-2155	-15 APB7F	15
26	29.9	26	-2145	-14 APB7F	14
24	27.9	24	-2135	-13 APB7F	13
22	25.9	22	-2125	-12 APB7F	12
20	23.9	20	-2115	-11 APB7F	11
18	21.9	18	-2105	-10 APB7F	10
16	19.9	16	-2095	-09 APB7F	9
14	17.9	14	-2085	-08 APB7F	8
12	15.9	12	-2075	-07 APB7F	7
10	13.9	10	-2065	-06 APB7F	6
8	11.9	8	-2055	-05 APB7F	5
6	9.9	6	-2045	-04 APB7F	4
4	7.9	4	-2035	-03 APB7F	3
2	5.9	2	39-35-2025	5513-02 APB7F	2
C	B	A	EDP NO.	ENG NO.	極数 CIRCUITS

5513-NAPB7F | MODEL NO.

NOTES

1. 嵌合相手 : 5512シリーズ
   MATES WITH 5512 SERIES
2. 本製品は 5513-NAPB の鉛フリー品である。
   THIS PRODUCT IS LEAD FREE OF 5513-NAPB.

材料 MATERIAL	図中参照 DESCRIBED IN THE DRAWING
仕上げ FINISH	図中参照 DESCRIBED IN THE DRAWING
適用電線範囲 WIRE RANGE	—#—
被覆外径 INS. RANGE	—#—

REVISED
EC NO: J2005-3068
DRWN:MNABEI 2005/04/18
CHKD:KTOJO 2005/04/19
APPR:NUKITA 2005/04/21
REV: A
DESCRIPTION

GENERAL TOLERANCES (UNLESS SPECIFIED)

10 UNDER	±0.2
10 OVER 30 UNDER	±0.25
30 OVER	±0.3
ANGULAR ±3 °	

DRAFT WHERE APPLICABLE MUST REMAIN WITHIN DIMENSIONS

DIMENSION STYLE: MM ONLY	SCALE: 5:1	DESIGN UNITS: METRIC	THIRD ANGLE PROJECTION
DRAWN BY: Y.SAKIYAMA	DATE: '04/04/20	TITLE: 2.0 BOARD TO BOARD CONN HSG ASSY -LEAD FREE-	
CHECKED BY: M.SASAO	DATE: '04/04/20		
APPROVED BY: M.SASAO	DATE: '04/04/20	molex MOLEX INCORPORATED	
MATERIAL NO.: SEE CHART		DOCUMENT NO.: SD-5513-003	SHEET NO.: 1 OF 1
SIZE: A3	THIS DRAWING CONTAINS INFORMATION THAT IS PROPRIETARY TO MOLEX INCORPORATED AND SHOULD NOT BE USED WITHOUT WRITTEN PERMISSION		

DWG. NO. SD-5513-NAPB

:MM DIMENSIONS IN METRIC DO NOT SCALE DRAWING

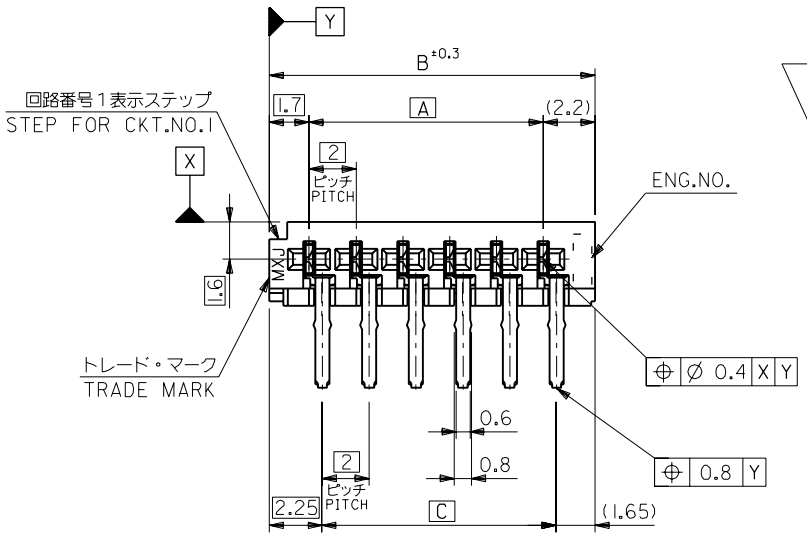

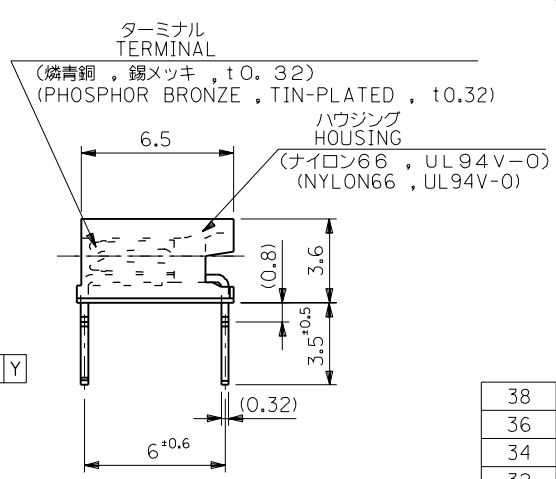

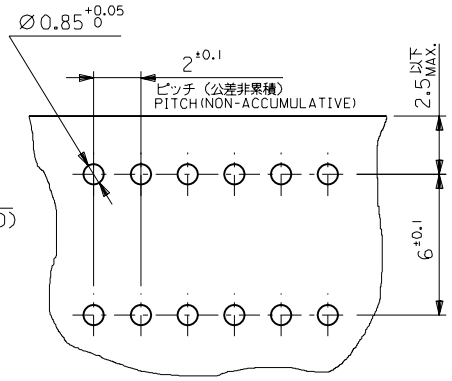

基板取付穴推奨寸法
RECOMMENDED P.C.BOARD HOLE DIM.

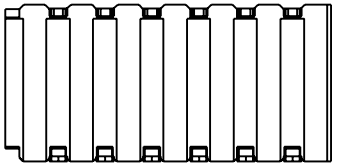

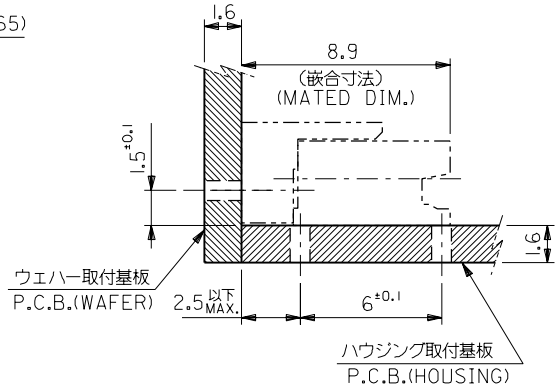

基板取付推奨レイアウト
P.C.BOARD POSITIONING WHEN MATED

C	B	A	EDP NO.	ENG. NO.	極数 CKT.
38	41.9	38	39-51-3200	5513-20APB	20
36	39.9	36	-3190	-19APB	19
34	37.9	34	-3180	-18APB	18
32	35.9	32	-3170	-17APB	17
30	33.9	30	-3160	-16APB	16
28	31.9	28	-3150	-15APB	15
26	29.9	26	-3140	-14APB	14
24	27.9	24	-3130	-13APB	13
22	25.9	22	-3120	-12APB	12
20	23.9	20	-3110	-11APB	11
18	21.9	18	-3100	-10APB	10
16	19.9	16	-3090	-09APB	9
14	17.9	14	-3080	-08APB	8
12	15.9	12	-3070	-07APB	7
10	13.9	10	-3060	-06APB	6
8	11.9	8	-3050	-05APB	5
6	9.9	6	-3040	-04APB	4
4	7.9	4	-3030	-03APB	3
2	5.9	2	39-51-3020	5513-02APB	2

注記
NOTE

1. 嵌合相手 : 5512-NA
MATES WITH 5512-NA

角度 ANGLE	±3°
30以上 OVER	±0.3
10以上 OVER 30未満 UNDER	±0.25
10未満 UNDER	±0.2
一般公差 GENERAL TOLERANCES	

記号 LTR	変更内容 REVISION RECORD	DR.	CHK.	日付 DATE
E	再作図 REDRAWN (JC60218)	T.Y	H.H	'95/10/16

材料 MATERIAL: 図中参照 DESCRIBED IN THE DRAWING
仕上げ FINISH
適用電線範囲 WIRE RANGE
被覆外径 INS. RANGE

DRAWN BY '95/10/16 T.YASUI
CHK'D BY '95/10/17 H.HIRAMOTO
APP'D BY '95/10/17 M.FUKUSHIMA
尺度 SCALE 5 : 1

molex MOLEX-JAPAN CO.,LTD. 日本モレックス株式会社

REVISE ONLY ON CAD SYSTEM

TITLE 名称
2.0 BOARD TO BOARD
CONN. HSG. ASSY

DWG. NO. SD-5513-NAPB
REV E

5513.S01

THIS DRAWING CONTAINS INFORMATION THAT IS PROPRIETARY TO MOLEX(JAPAN) AND SHOULD NOT BE USED WITHOUT WRITTEN PERMISSION
本図面は日本モレックス（株）の所有する情報を含むもので 当社の許可なく複製を禁止する。

EN-01C(032)MXJ-32