molex
one company › a world of innovation

This document was generated on 07/27/2017

PLEASE CHECK WWW.MOLEX.COM FOR LATEST PART INFORMATION

Part Number: 0350729802

Status: Active

Overview: Standard Quick-Disconnect Terminals

Description: MP-Lock™ Quick Disconnect, Female, for 14-18 AWG (2.00-0.80mm²), Metal Strip, Tab 6.35 x 0.81mm, Pre-Tin Plated

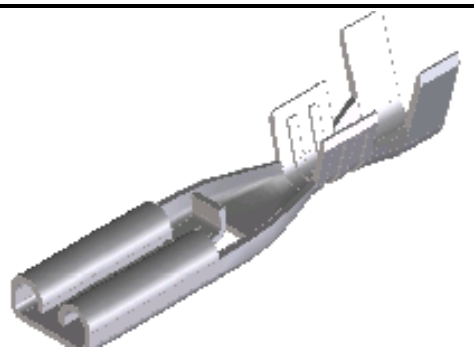

Series image - Reference only

Documents:

Drawing (PDF)
Product Specification PS-35960-001 (PDF)
Packaging Specification PK-35072-001-001 (PDF)
RoHS Certificate of Compliance (PDF)

Agency Certification

CSA	LR95446
UL	E92853

General

Product Family	Quick Disconnects
Series	35072
Crimp Quality Equipment	Yes
Insulated	No
Overview	Standard Quick-Disconnect Terminals
Product Name	MP-Lock™
Type	Quick Disconnect
UPC	800754239226

Physical

Barrel Type	Open
Gender	Female
Glow-Wire Compliant	No
Insulation	None
Lock to Mating Part	Yes
Material - Metal	Brass
Material - Plating Mating	Tin
Material - Plating Termination	Tin
Net Weight	0.866/g
Orientation	Straight
Packaging Type	Reel
Plating min - Mating	0.813µm
Plating min - Termination	0.813µm
Polarized to Mating Part	Yes
Tab Thickness	0.81mm
Tab Width	6.35mm
Temperature Range - Operating	-40°C to +105°C
Termination Interface: Style	Crimp or Compression
Wire Insulation Diameter	2.20-3.40mm
Wire Size AWG	14, 16, 18

Electrical

Voltage - Maximum	300V

Solder Process Data

Lead-freeProcess Capability	N/A

Material Info

Reference - Drawing Numbers

Packaging Specification	PK-35072-001-001
Product Specification	PS-35960-001
Sales Drawing	SD-35072-9702

EU ELV
Not Relevant

EU RoHS
Compliant

China RoHS

REACH SVHC
Not Contained Per - ED/30/2017 (7 July 2017)

Halogen-Free Status
Low-Halogen

Need more information on product environmental compliance?

Email productcompliance@molex.com
Please visit the Contact Us section for any non-product compliance questions.

China ROHS	Green Image
ELV	Not Relevant
RoHS Phthalates	Not Contained

Search Parts in this Series
35072 Series

Use With
35196 , 35959

This document was generated on 07/27/2017
PLEASE CHECK WWW.MOLEX.COM FOR LATEST PART INFORMATION