This document was generated on 08/02/2017

PLEASE CHECK WWW.MOLEX.COM FOR LATEST PART INFORMATION

Part Number: 0019091066

Status: Active

Overview: Standard .093" Pin and Socket Connectors

Description: 2.36mm Diameter Standard .093" Pin and Socket Receptacle Housing with Positive Latch, UL 94V-0, 6 Circuits

Documents:

3D Model
Drawing (PDF)
Product Specification PS-02-09 (PDF)
RoHS Certificate of Compliance (PDF)

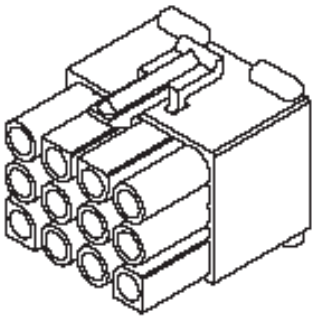

Series image - Reference only

Agency Certification

CSA	LR19980
UL	E29179

General

Product Family	Crimp Housings
Series	3191
Application	Power, Wire-to-Board, Wire-to-Wire
Comments	Polarized to Mating Part, with Mounting Ears
Overview	Standard .093" Pin and Socket Connectors
Product Name	Standard .093"
UPC	800753749085

Physical

Breakaway	No
Circuits (maximum)	6
Circuits Detail	2x3
Color - Resin	Natural
Flammability	94V-0
Gender	Receptacle
Glow-Wire Compliant	No
Keying to Mating Part	None
Lock to Mating Part	Yes
Material - Resin	Nylon
Net Weight	4.893/g
Number of Rows	2
Packaging Type	Bag
Panel Mount	No
Pitch - Mating Interface	6.70mm
Polarized to Mating Part	Yes
Stackable	No
Temperature Range - Operating	-40°C to +105°C

Electrical

Current - Maximum per Contact	9.0A

Material Info

Engineering Number	3191-6R1-201

Reference - Drawing Numbers

Product Specification	PS-02-09
Sales Drawing	SD-3191-6*

EU ELV
Not Relevant

EU RoHS
Compliant

China RoHS

REACH SVHC
Not Contained Per - ED/30/2017 (7 July 2017)

Halogen-Free Status
Low-Halogen

Need more information on product environmental compliance?

Email productcompliance@molex.com
Please visit the Contact Us section for any non-product compliance questions.

China ROHS	Not Reviewed
ELV	Not Relevant
RoHS Phthalates	Not Contained

Search Parts in this Series
3191 Series

Mates With
19-09-2066 , 19-09-2067 , 19-09-2068 , 19-09-2069 , 521 9

Use With
1189 Crimp Terminals, 1190 Crimp Terminals, 1380 Male Crimp Terminals, 1381 Female Crimp Terminals, 1433 Crimp Terminals, 1434 Male Crimp Terminals, 2605 , 2606 , 1973 , 2151 , 2273 , 2870 , Li nk:2871, 4272

This document was generated on 08/02/2017

PLEASE CHECK WWW.MOLEX.COM FOR LATEST PART INFORMATION