molex
one company › a world of innovation

This document was generated on 08/02/2017

PLEASE CHECK WWW.MOLEX.COM FOR LATEST PART INFORMATION

Part Number: 0015800283

Status: Active

Overview: C-Grid® Products

Description: 2.54mm Pitch C-Grid® Header, Through Hole without Peg, Dual Row, Vertical, Shrouded, High Temperature, 28 Circuits, 0.38µm Gold (Au) Selective Plating, Tin (Sn) PC Tail Plating

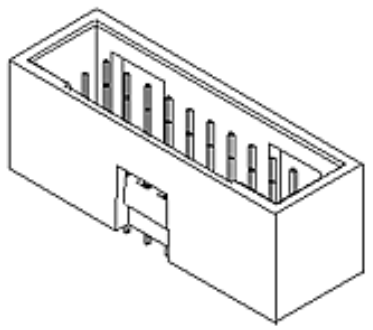

Series image - Reference only

Documents:

3D Model
Drawing (PDF)
Product Specification PS-70567-001 (PDF)
Packaging Specification PK-70873-0018 (PDF)
RoHS Certificate of Compliance (PDF)

Agency Certification

CSA	LR19980
UL	E29179

General

Product Family	PCB Headers
Series	70567
Application	Signal, Wire-to-Board
Overview	C-Grid® Products
Product Name	C-Grid®
UPC	800753974968

Physical

Breakaway	No
Circuits (Loaded)	28
Circuits (maximum)	28
Color - Resin	Black
First Mate / Last Break	No
Flammability	94V-0
Glow-Wire Compliant	No
Guide to Mating Part	No
Keying to Mating Part	None
Lock to Mating Part	Yes
Material - Metal	Brass, Phosphor Bronze
Material - Plating Mating	Gold
Material - Plating Termination	Tin
Material - Resin	High Temperature Thermoplastic
Net Weight	4.725/g
Number of Rows	2
Orientation	Vertical
PC Tail Length	3.30mm
PCB Locator	No
PCB Retention	Yes
PCB Thickness - Recommended	2.40mm
Packaging Type	Tube
Pitch - Mating Interface	2.54mm
Pitch - Termination Interface	2.54mm
Plating min - Mating	0.381µm
Plating min - Termination	1.905µm
Polarized to Mating Part	Yes
Polarized to PCB	No
Shrouded	Fully
Stackable	No
Surface Mount Compatible (SMC)	No
Temperature Range - Operating	-55°C to +105°C

EU ELV
Not Relevant

EU RoHS
Compliant

China RoHS

REACH SVHC
Not Contained Per -ED/01/2017 (12 January 2017)

Halogen-Free Status
Low-Halogen

Need more information on product environmental compliance?

Email productcompliance@molex.com
Please visit the Contact Us section for any non-product compliance questions.

China ROHS	Green Image
ELV	Not Relevant
RoHS Phthalates	Not Contained

Search Parts in this Series
70567 Series

Mates With
SL™ Crimp Housing 70450 , C-Grid® PCB Receptacle 71395

Termination Interface: Style	Through Hole
Electrical	
Current - Maximum per Contact	2.5A
Voltage - Maximum	250V
Solder Process Data	
Duration at Max. Process Temperature (seconds)	005
Lead-freeProcess Capability	SMC&WAVE
Max. Cycles at Max. Process Temperature	001
Process Temperature max. C	245
Material Info	
Engineering Number	A-70567-0080
Reference - Drawing Numbers	
Packaging Specification	PK-70873-0018
Product Specification	PS-70567-001
Sales Drawing	SDA-70567-****

This document was generated on 08/02/2017

PLEASE CHECK WWW.MOLEX.COM FOR LATEST PART INFORMATION