This document was generated on 05/02/2017

PLEASE CHECK WWW.MOLEX.COM FOR LATEST PART INFORMATION

Part Number: 0878342011

Status: Active

Overview: C-Grid® Products

Description: 2.54mm Pitch C-Grid® Header, Dual Row, Low Profile, Vertical, Shrouded, Lead-Free, 20 Circuits, Gold (Au) Flash, Beige, PCB Locators, without End Window

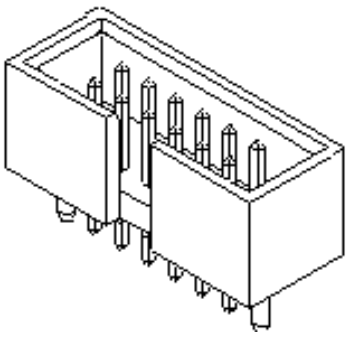

Series image - Reference only

Documents:

3D Model
Drawing (PDF)
Product Specification PS-70246-100-001 (PDF)
Packaging Specification PK-87835-001 (PDF)
RoHS Certificate of Compliance (PDF)

Agency Certification

UL	E29179

General

Product Family	PCB Headers
Series	87834
Application	Signal, Wire-to-Board
Overview	C-Grid® Products
Product Name	C-Grid®
UPC	822348274895

Physical

Breakaway	No
Circuits (Loaded)	20
Circuits (maximum)	20
Color - Resin	Natural
First Mate / Last Break	No
Flammability	94V-0
Glow-Wire Compliant	No
Guide to Mating Part	No
Keying to Mating Part	None
Lock to Mating Part	None
Material - Plating Mating	Gold
Material - Plating Termination	Tin
Material - Resin	Nylon
Net Weight	3.026/g
Number of Rows	2
Orientation	Vertical
PC Tail Length	3.43mm
PCB Locator	Yes
PCB Retention	Yes
Packaging Type	Tray
Pitch - Mating Interface	2.54mm
Pitch - Termination Interface	2.54mm
Plating min - Mating	0.127µm
Plating min - Termination	1.905µm
Polarized to Mating Part	Center Slot
Polarized to PCB	Yes
Shrouded	Fully
Stackable	No
Temperature Range - Operating	-55°C to +120°C
Termination Interface: Style	Through Hole

Electrical

Current - Maximum per Contact	2.5A
Voltage - Maximum	250V DC

EU ELV
Not Relevant

EU RoHS
Compliant

China RoHS

REACH SVHC
Not Contained Per -ED/01/2017 (12 January 2017)

Halogen-Free Status
Not Low-Halogen

Need more information on product environmental compliance?

Email productcompliance@molex.com
Please visit the Contact Us section for any non-product compliance questions.

China ROHS	Green Image
ELV	Not Relevant
RoHS Phthalates	Not Contained

Search Parts in this Series
87834 Series

Mates With
1.27mm Pitch Ribbon Cable Connectors

Solder Process Data

Duration at Max. Process Temperature (seconds)	005
Lead-freeProcess Capability	WAVE
Max. Cycles at Max. Process Temperature	001
Process Temperature max. C	265

Material Info

Reference - Drawing Numbers

Packaging Specification	PK-87835-001
Product Specification	PS-70246-100-001
Sales Drawing	SD-87834-024

This document was generated on 05/02/2017

PLEASE CHECK WWW.MOLEX.COM FOR LATEST PART INFORMATION