Part Number: 0395161015
Status: Active
Overview: Eurostyle Terminal Blocks
Description: 3.81mm Pitch Eurostyle Horizontal PCB Header, with Threaded Retention Inserts, 15 Circuits

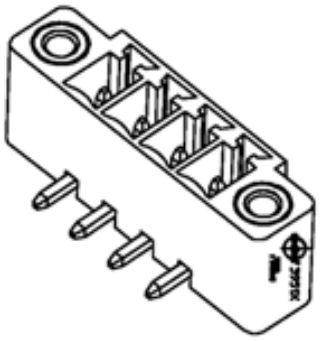

Series image - Reference only

Documents:
3D Model
Drawing (PDF)
Product Specification PS-39500-001-001 (PDF)
Packaging Specification PK-39516-001 (PDF)
RoHS Certificate of Compliance (PDF)

Agency Certification

UL	E48521

General

Product Family	Terminal Blocks
Series	39516
Application	N/A
Component Type	PCB Header
Overview	Eurostyle Terminal Blocks
Product Name	ESE, Eurostyle Pluggable
Type	Euro Block
UPC	822350442824

Physical

Circuits (Loaded)	15
Entry Angle	N/A
Lock to Mating Part	Yes
Number of Rows	1
Orientation	Horizontal
PC Tail Length	3.50mm
PCB Thickness - Recommended	2.50mm
Panel Mount	No
Pitch - Mating Interface	3.81mm
Pitch - Termination Interface	3.81mm
Polarized to Mating Part	Yes
Shrouded	Fully
Stackable	No
Temperature Range - Operating	-40° to +105°C
Wire Size AWG	N/A

Electrical

Current - Maximum per Contact	8.0A
Voltage - Maximum	300V

Material Info

Reference - Drawing Numbers

Packaging Specification	PK-39516-001
Product Specification	PS-39500-001-001
Sales Drawing	SD-39501-002, SD-39516-001-001

EU ELV
Not Relevant

EU RoHS
Compliant with Exemption 6(c)

China RoHS

REACH SVHC
Contained Per - ED/71/2019 (16 July 2019)
Lead

Halogen-Free Status
Low-Halogen

For more information, please visit Contact US

China ROHS	50 Image
ELV	Not Relevant
RoHS Phthalates	Not Contained

Search Parts in this Series
39516 Series

Mates With
Most 3.81mm Pitch Industry Standard Plugs, 39517 Vertical Plug with Retention Screws, 39514 Horizontal Plug with Retention Screws