ENG. NO.	PART NO.	FORM
4296	16-02-1103	CHAIN
4296-L	16-02-1105	LOOSE

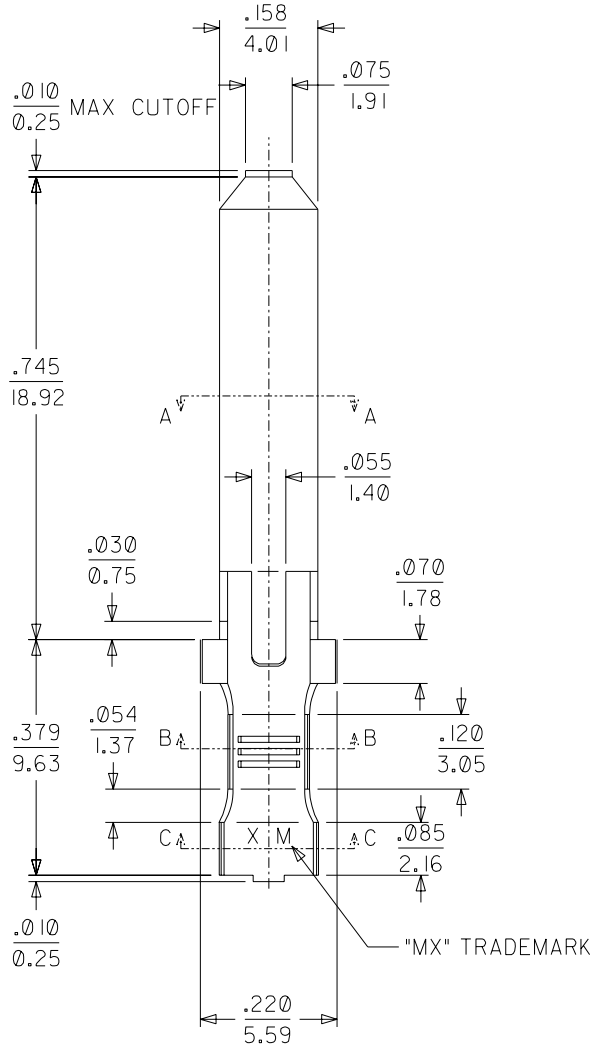

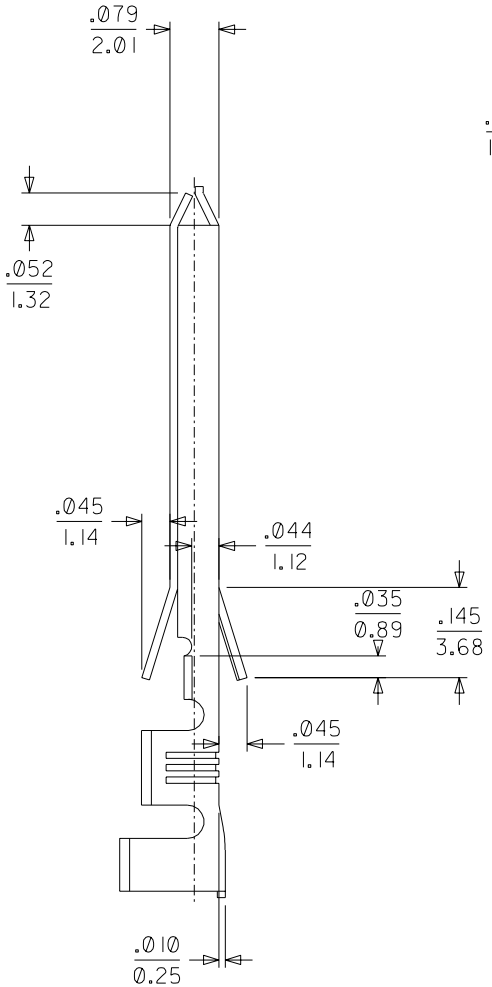

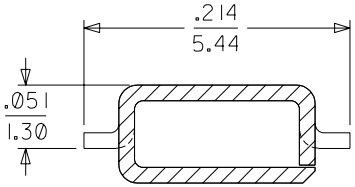

SECTION A-A
10:1

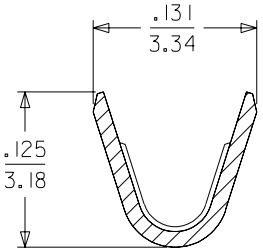

SECTION B-B
10:1

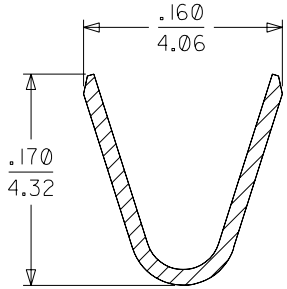

SECTION C-C
10:1

NOTES:
1) MATERIAL: C26000 BRASS
2) FINISH: PRE-TINNED.
3) WILL ACCOMMODATE #16-#22 AWG WIRE W/.03/(0.8) INSULATION.

REDRAW TO CAD
EC NO. UCP2005-0716
DRWN: BSYNNOTT / /
CH'K: ESOMMERS / /
APPR: WIRKUS 09/30/04
DESCRIPTION
F
REV

QUALITY SYMBOLS
MAJOR =0
CRITICAL C =0

GENERAL TOLERANCES: (UNLESS SPECIFIED)

	mm	INCH
4 PLACES	±0.	±.
3 PLACES	±0.	±.006
2 PLACES	±0.15	±.010
1 PLACE	±0.25	±.

ANGULAR: ±1/2 °

DRAFT WHERE APPLICABLE MUST REMAIN WITHIN DIMENSIONS

SCALE 5:1
DESIGN UNITS ☐mm ☒INCH
THIRD ANGLE PROJECTION
DIMENSIONS: ☐ mm/INCH ☒ INCH/mm ☐ mm ONLY
SHT REV
REVISE ON CAD ONLY

DRAWN BY & DATE BSYNNOTT / /
CHECKED BY & DATE ESOMMERS / /
APPROVED BY & DATE WIRKUS 09/30/04
CAD FILENAME .

TITLE: TERMINAL, SPADE
.079 X .157
FOR AC RECEPTACLE

molex MOLEX INCORPORATED

MATERIAL NO. 16-02-110*
DRAWING NO. SD-4296 -*
SHEET NO. 1 OF 1

THIS DRAWING CONTAINS INFORMATION THAT IS PROPRIETARY TO MOLEX INCORPORATED AND SHOULD NOT BE USED WITHOUT WRITTEN PERMISSION.

SIZE B