Features

- 8-bit Microcontroller Compatible with 8051 Products
- Enhanced 8051 Architecture
  - Single Clock Cycle per Byte Fetch
  - 12 Clock per Machine Cycle Compatibility Mode
  - Up to 20 MIPS Throughput at 20 MHz Clock Frequency
  - Fully Static Operation: 0 Hz to 20 MHz
  - On-chip 2-cycle Hardware Multiplier
  - 256 x 8 Internal RAM
  - External Data/Program Memory Interface
  - Dual Data Pointers
  - 4-level Interrupt Priority
- Nonvolatile Program and Data Memory
  - 4K/8K Bytes of In-System Programmable (ISP) Flash Program Memory
  - 256 Bytes of Flash Data Memory
  - 256-byte User Signature Array
  - Endurance: 10,000 Write/Erase Cycles
  - Serial Interface for Program Downloading
  - 64-byte Fast Page Programming Mode
  - 3-level Program Memory Lock for Software Security
  - In-Application Programming of Program Memory
- Peripheral Features
  - Three 16-bit Timer/Counters with Clock Out Modes
  - Enhanced UART
    - Automatic Address Recognition
    - Framing Error Detection
    - SPI and TWI Emulation Modes
  - Programmable Watchdog Timer with Software Reset and Prescaler
- Special Microcontroller Features
  - Brown-out Detection and Power-on Reset with Power-off Flag
  - Selectable Polarity External Reset Pin
  - Low Power Idle and Power-down Modes
  - Interrupt Recovery from Power-down Mode
  - Internal 1.8432 MHz Auxiliary Oscillator
- I/O and Packages
  - Up to 36 Programmable I/O Lines
  - Green (Pb/Halide-free) Packages
    - 40-lead PDIP
    - 44-lead TQFP/PLCC
    - 44-pad VQFN/MLF
  - Configurable Port Modes (per 8-bit port)
    - Quasi-bidirectional (80C51 Style)
    - Input-only (Tristate)
    - Push-pull CMOS Output
    - Open-drain
- Operating Conditions
  - 2.4V to 5.5V V_{CC} Voltage Range
  - -40° C to 85°C Temperature Range
  - 0 to 20 MHz @ 2.4V–5.5V
  - 0 to 25 MHz @ 4.5V–5.5V

8-bit Microcontroller with 4K/8K Bytes In-System Programmable Flash

AT89LP51
AT89LP52

3709D–MICRO–12/11

1. Pin Configurations

1.1 40-lead PDIP

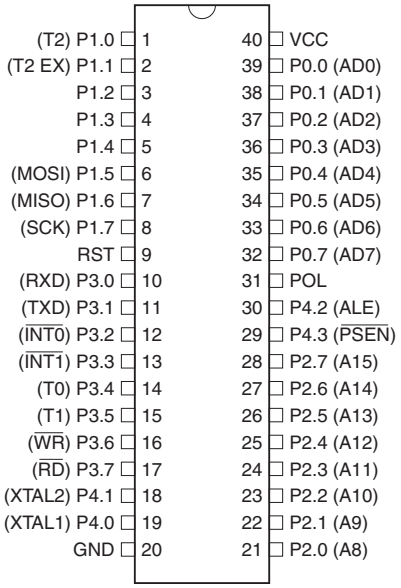

1.2 44-lead TQFP

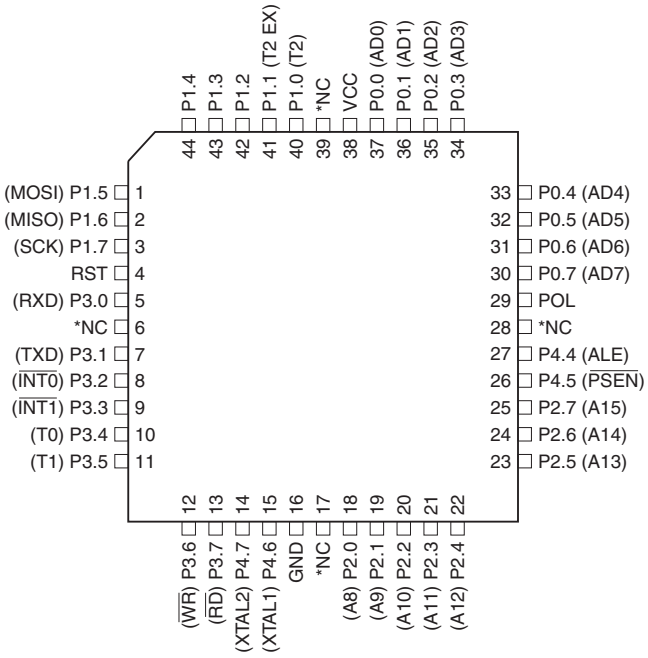

1.3 44-lead PLCC

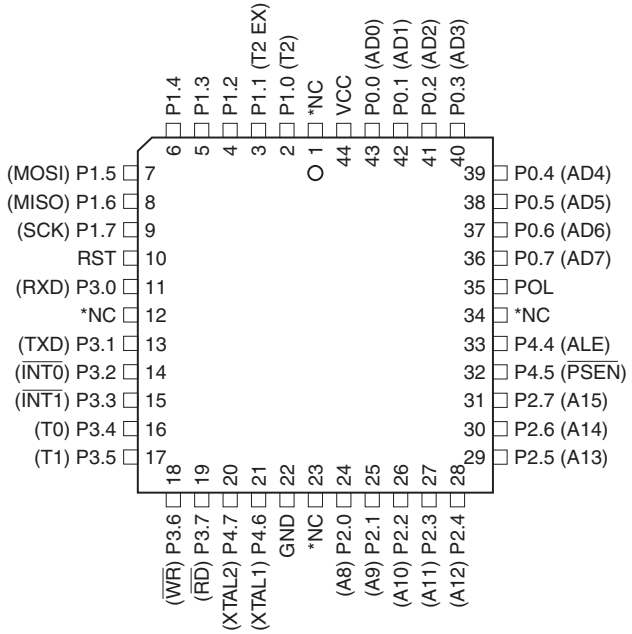

1.4 44-pad VQFN/QFN/MLF

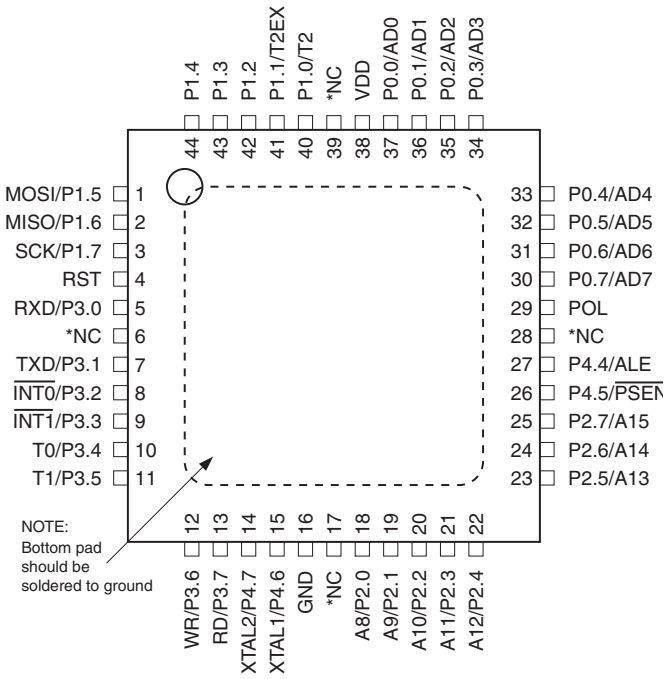

1.5 Pin Description

Table 1-1. AT89LP51/52 Pin Description

Pin Number				Symbol	Type	Description
TQFP	PLCC	PDIP	VQFN			
1	7	6	1	P1.5	I/O I/O	**P1.5**: I/O Port 1 bit 5. **MOSI**: SPI master-out/slave-in. In UART SPI mode this pin is an output. During In-System Programming, this pin is an input.
2	8	7	2	P1.6	I/O I/O	**P1.6**: I/O Port 1 bit 6. **MISO**: SPI master-in/slave-out. In UART SPI mode this pin is an input. During In-System Programming, this pin is an output.
3	9	8	3	P1.7	I/O I/O	**P1.7**: I/O Port 1 bit 7. **SCK**: SPI Clock. In UART SPI mode this pin is an output. During In-System Programming, this pin is an input.
4	10	9	4	RST	I/O	**RST**: External Reset input (Reset polarity depends on POL pin. See "External Reset" on page 33.). The RST pin can output a pulse when the internal Watchdog reset is active.
5	11	10	5	P3.0	I/O I	**P3.0**: I/O Port 3 bit 0. **RXD**: Serial Port Receiver Input.
6	12		6		NC	Not internally connected
7	13	11	7	P3.1	I/O O	**P3.1**: I/O Port 3 bit 1. **TXD**: Serial Port Transmitter Output.
8	14	12	8	P3.2	I/O I	**P3.2**: I/O Port 3 bit 2. **$\overline{\text{INT0}}$**: External Interrupt 0 Input or Timer 0 Gate Input.
9	15	13	9	P3.3	I/O I	**P3.3**: I/O Port 3 bit 3. **$\overline{\text{INT1}}$**: External Interrupt 1 Input or Timer 1 Gate Input
10	16	14	10	P3.4	I/O I/O	**P3.4**: I/O Port 3 bit 4. **T1**: Timer/Counter 0 External input or output.
11	17	15	1	P3.5	I/O I/O	**P3.5**: I/O Port 3 bit 5. **T1**: Timer/Counter 1 External input or output.
12	18	16	12	P3.6	I/O O	**P3.6**: I/O Port 3 bit 6. **$\overline{\text{WR}}$**: External memory interface Write Strobe (active-low).
13	19	17	13	P3.7	I/O O	**P3.7**: I/O Port 3 bit 7. **$\overline{\text{RD}}$**: External memory interface Read Strobe (active-low).
14	20	18	14	P4.7	I/O O	**P4.7**: I/O Port 4 bit 7. **XTAL2**: Output from inverting oscillator amplifier. It may be used as a port pin if the internal RC oscillator or external clock is selected as the clock source.
15	21	19	15	P4.6	I/O I	**P4.6**: I/O Port 4 bit 6. **XTAL1**: Input to the inverting oscillator amplifier and internal clock generation circuits. It may be used as a port pin if the internal RC oscillator is selected as the clock source.
16	22	20	16	GND	I	Ground
17	23		17		NC	Not internally connected
18	24	21	18	P2.0	I/O O	**P2.0**: I/O Port 2 bit 0. **A8**: External memory interface Address bit 8.
19	25	22	19	P2.1	I/O O	**P2.1**: I/O Port 2 bit 1. **A9**: External memory interface Address bit 9.
20	26	23	20	P2.1	I/O O	**P2.2**: I/O Port 2 bit 2. **A10**: External memory interface Address bit 10.

Table 1-1. AT89LP51/52 Pin Description

Pin Number				Symbol	Type	Description
TQFP	PLCC	PDIP	VQFN			
21	27	24	21	P2.3	I/O O	**P2.3**: I/O Port 2 bit 3. **A11**: External memory interface Address bit 11.
22	28	25	22	P2.4	I/O O	**P2.4**: I/O Port 2 bit 5. **A12**: External memory interface Address bit 12.
23	29	26	23	P2.5	I/O O	**P2.5**: I/O Port 2 bit 5. **A13**: External memory interface Address bit 13.
24	30	27	24	P2.6	I/O O	**P2.6**: I/O Port 2 bit 6. **A14**: External memory interface Address bit 14.
25	31	28	25	P2.7	I/O O	**P2.7**: I/O Port 2 bit 7. **A15**: External memory interface Address bit 15.
26	32	29	26	P4.5	I/O O	**P4.5**: I/O Port 4 bit 5. **$\overline{\text{PSEN}}$**: External memory interface Program Store Enable (active-low).
27	33	30	27	P4.4	I/O O	**P4.4**: I/O Port 4 bit 4. **ALE**: External memory interface Address Latch Enable.
28	34		28		NC	Not internally connected
29	35	31	29	POL	I	**POL**: Reset polarity (See “External Reset” on page 33.)
30	36	32	30	P0.7	I/O I/O	**P0.7**: I/O Port 0 bit 7. **AD7**: External memory interface Address/Data bit 7.
31	37	33	31	P0.6	I/O I/O	**P0.6**: I/O Port 0 bit 6. **AD6**: External memory interface Address/Data bit 6.
32	38	34	32	P0.5	I/O I/O	**P0.5**: I/O Port 0 bit 5. **AD5**: External memory interface Address/Data bit 5.
33	39	35	33	P0.4	I/O I/O	**P0.4**: I/O Port 0 bit 4. **AD4**: External memory interface Address/Data bit 4.
34	40	36	34	P0.3	I/O I/O	**P0.3**: I/O Port 0 bit 3. **AD3**: External memory interface Address/Data bit 3.
35	41	37	35	P0.2	I/O I/O	**P0.2**: I/O Port 0 bit 2. **AD2**: External memory interface Address/Data bit 2.
36	42	38	36	P0.1	I/O I/O	**P0.1**: I/O Port 0 bit 1. **AD1**: External memory interface Address/Data bit 1.
37	43	39	37	P0.0	I/O I/O	**P0.0**: I/O Port 0 bit 0. **AD0**: External memory interface Address/Data bit 0.
38	44	40	38	VDD	I	Supply Voltage
39	1		39		NC	Not internally connected
40	2	1	40	P1.0	I/O I/O	**P1.0**: I/O Port 1 bit 0. **T2**: Timer 2 External Input or Clock Output.
41	3	2	41	P1.1	I/O I	**P1.1**: I/O Port 1 bit 1. **T2EX**: Timer 2 External Capture/Reload Input.
42	4	3	42	P1.2	I/O	**P1.2**: I/O Port 1 bit 2.
43	5	4	43	P1.3	I/O	**P1.3**: I/O Port 1 bit 3.
44	6	5	44	P1.4	I/O	**P1.4**: I/O Port 1 bit 4.

2. Overview

The AT89LP51/52 is a low-power, high-performance CMOS 8-bit microcontroller with 4K/8K bytes of In-System Programmable Flash program memory and 256 bytes of Flash data memory. The device is manufactured using Atmel's high-density nonvolatile memory technology and is compatible with the industry-standard 80C52 instruction set.

The AT89LP51/52 is built around an enhanced CPU core that can fetch a single byte from memory every clock cycle. In the classic 8051 architecture, each fetch requires 6 clock cycles, forcing instructions to execute in 12, 24 or 48 clock cycles. In the AT89LP51/52 CPU, instructions need only 1 to 4 clock cycles providing 6 to 12 times more throughput than the standard 8051. Seventy percent of instructions need only as many clock cycles as they have bytes to execute, and most of the remaining instructions require only one additional clock. The enhanced CPU core is capable of 20 MIPS throughput whereas the classic 8051 CPU can deliver only 4 MIPS at the same current consumption. Conversely, at the same throughput as the classic 8051, the new CPU core runs at a much lower speed and thereby greatly reducing power consumption and EMI. The AT89LP51/52 also includes a compatibility mode that will enable classic 12 clock per machine cycle operation for true timing compatibility with AT89S51/52.

The AT89LP51/52 provides the following standard features: 4K/8K bytes of In-System Programmable Flash program memory, 256 bytes of Flash data memory, 256 bytes of RAM, up to 36 I/O lines, three 16-bit timer/counters, a programmable watchdog timer, a full-duplex serial port, an on-chip crystal oscillator, an internal 1.8432 MHz auxiliary oscillator, and a four-level, six-vector interrupt system. A block diagram is shown in Figure 2-1.

Key Benefits:

- Full software and timing compatibility with AT89S52 means no changes to existing software, including fetching from external ROM or read/write from/to external RAM
- Disable compatibility mode to achieve on average 9 times more throughput at the same current consumption and frequency as AT89S52; or lower the clock frequency 9 times and achieve the same speed as AT89S52 but with more than 5 times less current consumption
- Save even more power and the cost of a quartz crystal by using the internal 1.8432 MHz RC oscillator, which is Vcc and temperature compensated well enough to ensure proper UART serial communications. Together with the built-in POR and the BOD circuits, you do not need any external components for AT89LP52 to provide the reset and clock functions
- All three timer/counters of the AT89LP51/52, Timer 0, Timer 1 and Timer 2, can be configured to toggle a port pin on overflow for clock/waveform generation. Unlike AT89S51, Timer 2 is also present on AT89LP51
- The enhanced full-duplex UART of the AT89LP51/52 includes Framing Error Detection and Automatic Address Recognition. In addition, enhancements to Mode 0 allow hardware accelerated emulation of a master SPI or TWI
- Use In-Application Programming to alter the built-in 8K Flash program memory while executing the application, in effect making it possible to have programmable data tables embedded in the program code. Or use the 256-byte Flash Data memory for nonvolatile data storage
- Each 8-bit I/O port of the AT89LP51/52 can be independently configured in one of four operating modes. In quasi-bidirectional mode, the port operates as in the classic 8051. In input-only mode, the port is tristated. Push-pull output mode provides full CMOS drivers and open-drain mode provides just a pull-down. Unlike other 8051s, this allows Port 0 to operate with on-chip pull-ups if desired

2.1 Block Diagram

Figure 2-1. AT89LP51/52 Block Diagram

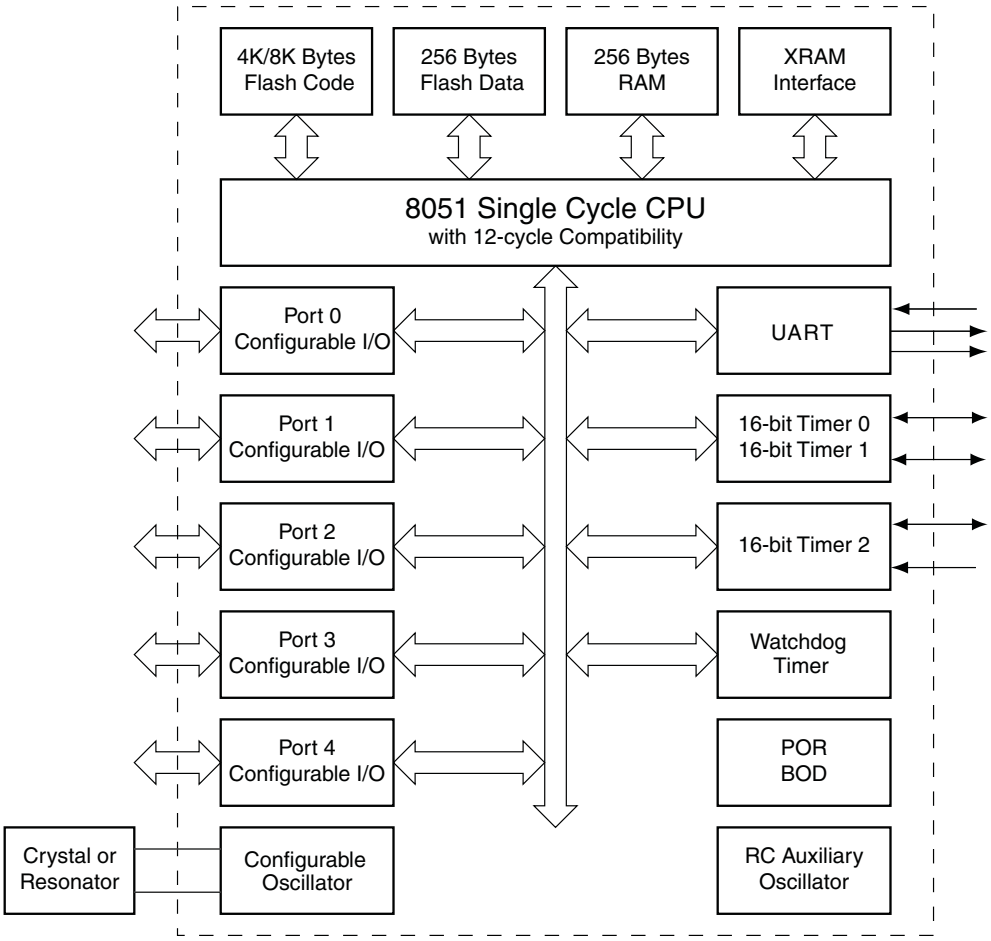

2.2 System Configuration

The AT89LP51/52 supports several system configuration options. Nonvolatile options are set through user fuses that must be programmed through the flash programming interface. Volatile options are controlled by software through individual bits of special function registers (SFRs). The AT89LP51/52 must be properly configured before correct operation can occur.

2.2.1 Fuse Options

Table 2-1 lists the fusable options for the AT89LP51/52. These options maintain their state even when the device is powered off, but can only be changed with an external device programmer. For more information, see Section 17.7 “User Configuration Fuses” on page 86.

Table 2-1. User Configuration Fuses

Fuse Name	Description
Clock Source	Selects between the High Speed Crystal Oscillator, Low Speed Crystal Oscillator, External Clock or Internal RC Oscillator for the source of the system clock.
Start-up Time	Selects time-out delay for the POR/BOD/PWD wake-up period.
Compatibility Mode	Configures the CPU in 12-clock Compatibility mode or single-cycle Fast mode
In-System Programming Enable	Enables or disables In-System Programming.
User Signature Programming	Enables or disables programming of User Signature array.
Tristate Ports	Configures the default port state as input-only mode (tristated) or quasi-bidirectional mode (weakly pulled high).
In-Application Programming	Enables or disables In-Application (self) Programming
R1 Enable	

2.2.2 Software Options

Table 2-2 lists some important software configuration bits that affect operation at the system level. These can be changed by the application software but are set to their default values upon any reset. Most peripherals also have multipe configuration bits that are not listed here.

Table 2-2. Important Software Configuration Bits

Bit(s)	SFR Location	Description
PxM0 PxM1	PMOD	Configures the I/O mode of all pins of Port x to be nput-only, quasi-bidirectional, push-pull output or open-drain. The default state is controlled by the Default Port State fuse above
CDV_{2-0}	CLKREG.3-1	Selects the division ratio between the oscillator and the system clock
TPS_{3-0}	CLKREG.7-4	Selects the division ratio between the system clock and the timers
DISALE	AUXR.0	Enables/disables toggling of ALE
EXRAM	AUXR.1	Enables/disables access to on-chip memories that are mapped to the external data memory address space
WS_{1-0}	AUXR.3-2	Selects the number of wait states when accessing external data memory
DMEN	MEMCON.3	Enables/disables access to the on-chip flash data memory
IAP	MEMCON.7	Enbles/disables the self programming feature when the fuse allows

2.3 Comparison to AT89S51/52

The AT89LP51/52 is part of a family of devices with enhanced features that are fully binary compatible with the 8051 instruction set. The AT89LP51/52 has two modes of operations, Compatibility mode and Fast mode. In Compatibility mode the instruction timing, peripheral behavior, SFR addresses, bit assignments and pin functions are identical to Atmel's existing AT89S51/52 product. Additional enhancements are transparent to the user and can be used if desired. Fast mode allows greater performance, but with some differences in behavior. The major enhancements from the AT89S51/52 are outlined in the following paragraphs and may be useful to users migrating to the AT89LP51/52 from older devices. A summary of the differences between Compatibility and Fast modes is given in Table 2-3 on page 10. See also the Application note “Migrating from AT89S52 to AT89LP52.”

2.3.1 Instruction Execution

In Compatibility mode the AT89LP51/52 CPU uses the six-state machine cycle of the standard 8051 where instruction bytes are fetched every three system clock cycles. Execution times in this mode are identical to AT89S51/52. For greater performance the user can enable Fast mode by disabling the Compatibility fuse. In Fast mode the CPU fetches one code byte from memory every clock cycle instead of every three clock cycles. This greatly increases the throughput of the CPU. Each standard instruction executes in only 1 to 4 clock cycles. See "Instruction Set Summary" on page 75 for more details. Any software delay loops or instruction-based timing operations may need to be retuned to achieve the desired results in Fast mode.

2.3.2 System Clock

By default in Compatibility mode the system clock frequency is divided by 2 from the externally supplied XTAL1 frequency for compatibility with standard 8051s (12 clocks per machine cycle). The System Clock Divider can scale the system clock versus the oscillator source (See Section 6.4 on page 31). The divide-by-2 can be disabled to operate in X2 mode (6 clocks per machine cycle) or the clock may be further divided to reduce the operating frequency. In Fast mode the clock divider defaults to divide by 1.

The system clock source is selectable between the crystal oscillator, an externally driven clock and an internal 1.8432 MHz auxiliary oscillator. See "System Clock" on page 29 and "User Configuration Fuses" on page 86.

2.3.3 Reset

The RST pin of the AT89LP51/52 has selectable polarity using the POL pin (formerly $\overline{EA}$). When POL is high the RST pin is active high with a pull-down resistor and when POL is low the RST pin is active low with a pull-up resistor. For existing AT89S51/52 sockets where $\overline{EA}$ is tied to VDD, replacing AT89S51/52 with AT89LP51/52 will maintain the active high reset. Note that forcing external execution by tying $\overline{EA}$ low is not supported.

The AT89LP51/52 includes an on-chip Power-On Reset and Brown-out Detector circuit that ensures that the device is reset from system power up. In most cases a RC startup circuit is not required on the RST pin, reducing system cost, and the RST pin may be left unconnected if a board-level reset is not present.

2.3.4 Timer/Counters

A common prescaler is available to divide the time base for Timer 0, Timer 1, Timer 2 and the WDT. The TPS_{3-0} bits in the CLKREG SFR control the prescaler (Table 6-2 on page 31). In Compatibility mode TPS_{3-0} defaults to 0101B, which causes the timers to count once every machine cycle. The counting rate can be adjusted linearly from the system clock rate to 1/16 of the system clock rate by changing TPS_{3-0}. In Fast mode TPS_{3-0} defaults to 0000B, or the system clock rate. TPS does not affect Timer 2 in Clock Out or Baud Generator modes.

In Compatibility mode the sampling of the external Timer/Counter pins: T0, T1, T2 and T2EX; and the external interrupt pins, $\overline{INT0}$ and $\overline{INT1}$, is also controlled by the prescaler. In Fast mode these pins are always sampled at the system clock rate.

Both Timer 0 and Timer 1 can toggle their respective counter pins, T0 and T1, when they overflow by setting the output enable bits in TCONB.

The Watchdog Timer includes a 7-bit prescaler for longer timeout periods than the AT89S51/52. Note that in Fast Mode the WDIDLE and DISRTO bits are located in WDTCON and not in AUXR.

2.3.5 Interrupt Handling

With the addition of the IPH register, the AT89LP51/52 provides four levels of interrupt priority for greater flexibility in handling multiple interrupts. Also, Fast mode allows for faster interrupt response due to the shorter instruction execution times.

2.3.6 Serial Port

The timer prescaler increases the range of achievable baud rates when using Timer 1 to generate the baud rate in UART Modes 1 or 3, including an increase in the maximum baud rate available in Compatibility mode. Additional features include automatic address recognition and framing error detection.

The shift register mode (Mode 0) has been enhanced with more control of the polarity, phase and frequency of the clock and full-duplex operation. This allows emulation of master serial pheriperal (SPI) and two-wire (TWI) interfaces.

2.3.7 I/O Ports

The P0, P1, P2 and P3 I/O ports of the AT89LP51/52 may be configured in four different modes. The default setting depends on the Tristate-Port User Fuse (See Section 17.7 on page 86). When the fuse is set all the I/O ports revert to input-only (tristated) mode at power-up or reset. When the fuse is not active, ports P1, P2 and P3 start in quasi-bidirectional mode and P0 starts in open-drain mode. P4 always operates in quasi-bidirectional mode. P0 can be configured to have internal pull-ups by placing it in quasi-bidirectional or output modes. This can reduce system cost by removing the need for external pull-ups on Port 0.

The P4.4–P4.7 pins are additional I/Os that replace the normally dedicated ALE, PSEN, XTAL1 and XTAL2 pins of the AT89S51/52. These pins can be used as additional I/Os depending on the configuration of the clock and external memory.

2.3.8 Security

The AT89LP51/52 does not support the extenal access pin ($\overline{EA}$). Therefore it is not possible to execute from external program memory in address range 0000H–1FFFH. When the third Lockbit is enabled (Lock Mode 4) external program execution is disabled for all addresses above 1FFFH. This differs from AT89S51/52 where Lock Mode 4 prevents $\overline{EA}$ from being sampled low, but may still allow external execution at addresses outside the 8K internal space.

2.3.9 Programming

The AT89LP51/52 supports a richer command set for In-System Programming (ISP). Existing AT89S51/52 programmers should be able to program the AT89LP51/52 in byte mode. In page mode the AT89LP51/52 only supports programming of a half-page of 64 bytes and therefore requires an extra address byte as compared to AT89S51/52. Furthermore the device signature is located at addresses 0000H, 0001H and 0003H instead of 0000H, 0100H and 0200H.

Table 2-3. Compatibility Mode versus Fast Mode Summary

Feature	Compatibility	Fast
Instruction Fetch in System Clocks	3	1
Instruction Execution Time in System Clocks	6, 12, 18 or 24	1, 2, 3, 4 or 5
Default System Clock Divisor	2	1
Default Timer Prescaler Divisor	6	1

Table 2-3. Compatibility Mode versus Fast Mode Summary

Feature	Compatibility	Fast
Pin Sampling Rate ($\overline{INT0}$, $\overline{INT1}$, T0, T1, T2, T2EX)	Prescaler Rate	System Clock
Minimum RST input pulse in System Clocks	12	2
WDIDLE and DISRTO bit locations	AUXR	WDTCON

3. Memory Organization

The AT89LP51/52 uses a Harvard Architecture with separate address spaces for program and data memory. The program memory has a regular linear address space with support for 64K bytes of directly addressable application code. The data memory has 256 bytes of internal RAM and 128 bytes of Special Function Register I/O space. The AT89LP51/52 supports up to 64K bytes of external data memory, with portions of the external data memory space implemented on chip as nonvolatile Flash data memory. External program memory is supported for addresses above 8K. The memory address spaces of the AT89LP51/52 are listed in Table 3-1.

Table 3-1. AT89LP51/52 Memory Address Spaces

Name	Description	Range
DATA	Directly addressable internal RAM	00H–7FH
IDATA	Indirectly addressable internal RAM and stack space	00H–FFH
SFR	Directly addressable I/O register space	80H–FFH
FDATA	On-chip nonvolatile Flash data memory	0000H–00FFH
XDATA	External data memory	0100H–FFFFH
CODE	On-chip nonvolatile Flash program memory	0000H–0FFFH (AT89LP51) 0000H–1FFFH (AT89LP52)
XCODE	External program memory	2000H–FFFFH (AT89LP51) 1000H–FFFFH (AT89LP52)
SIG	On-chip nonvolatile Flash signature array	0000H–01FFH

3.1 Program Memory

The AT89LP51/52 contains 4K/8K bytes of on-chip In-System Programmable Flash memory for program storage, plus support for up to 60K/56K bytes of external program memory. The Flash memory has an endurance of at least 10,000 write/erase cycles and a minimum data retention time of 10 years. The reset and interrupt vectors are located within the first 83 bytes of program memory (refer to Table 9-1 on page 38). Constant tables can be allocated within the entire 64K program memory address space for access by the MOVC instruction. A map of the AT89LP51/52 program memory is shown in Figure 3-1.

Figure 3-1. Program Memory Map

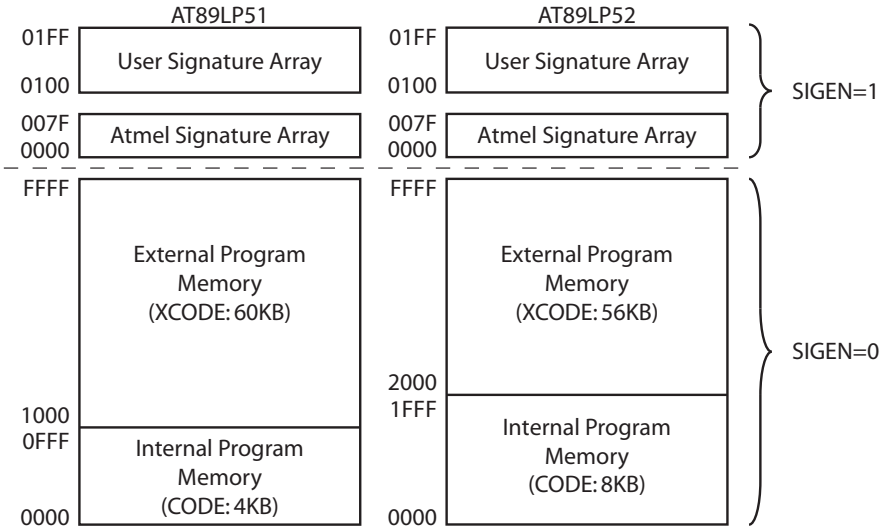

3.1.1 External Program Memory Interface

The AT89LP51/52 uses the standard 8051 external program memory interface with the upper address on Port 2, the lower address and data in/out multiplexed on Port 0, and the ALE and $\overline{\text{PSEN}}$ strobes. Program memory addresses are always 16-bits wide, even though the actual amount of program memory used may be less than 64K byes. External program execution sacrifices two full 8-bit ports, P0 and P2, to the function of addressing the program memory.

Figure 3-2 shows a hardware configuration for accessing up to 64K bytes of external ROM using a 16-bit linear address. Port 0 serves as a multiplexed address/data bus to the ROM. The Address Latch Enable strobe (ALE) is used to latch the lower address byte into an external register so that Port 0 can be freed for data input/output. Port 2 provides the upper address byte throughout the operation. $\overline{\text{PSEN}}$ strobes the external memory.

Figure 3-3 shows the timing of the external program memory interface. ALE is emitted at a constant rate of 1/3 of the system clock with a 1/3 duty cycle. $\overline{\text{PSEN}}$ is emitted at a similar rate, but with 50% duty cycle. The new address changes in the middle of the ALE pulse for latching on the falling edge and is tristated at the falling edge of $\overline{\text{PSEN}}$. The instruction data is sampled from P0 and latched internally during the high phase of the clock prior to the rising edge of $\overline{\text{PSEN}}$. This timing applies to both Compatibility and Fast modes. In Compatibility mode there is no difference in instruction timing between internal and external execution.

Figure 3-2. Executing from External Program Memory

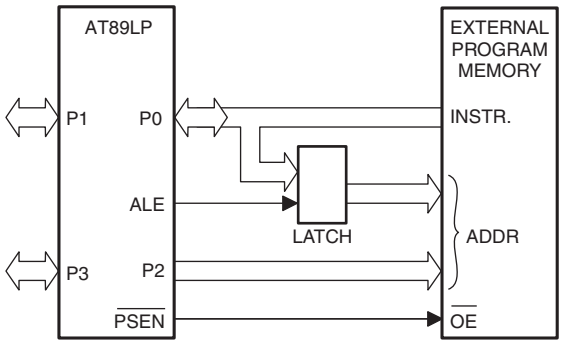

Figure 3-3. External Program Memory Fetches

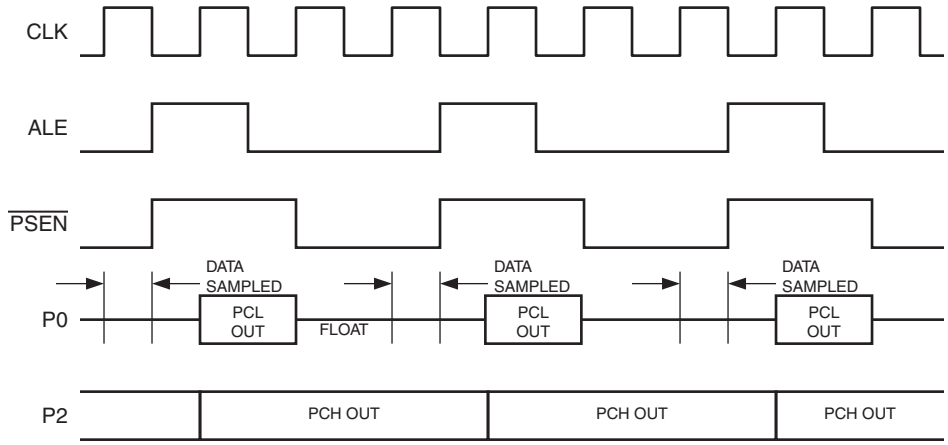

In order for Fast mode to fetch externally, two wait states must be inserted for every clock cycle, increasing the instruction execution time by a factor of 3. However, due to other optimizations, external Fast mode instructions may still be 1/4 to 1/2 faster than their Compatibility mode equivalents. Note that if ALE is allowed to toggle in Fast mode, there is a possibility that when the CPU jumps from internal to external execution a short pulse may occur on ALE as shown in Figure 3-4. The setup time from the address to the falling edge of ALE remains the same. However, this behavior can be avoided by setting the DISALE bit prior to any jump above the 8K border.

Figure 3-4. Internal/External Program Memory Boundary (Fast Mode)

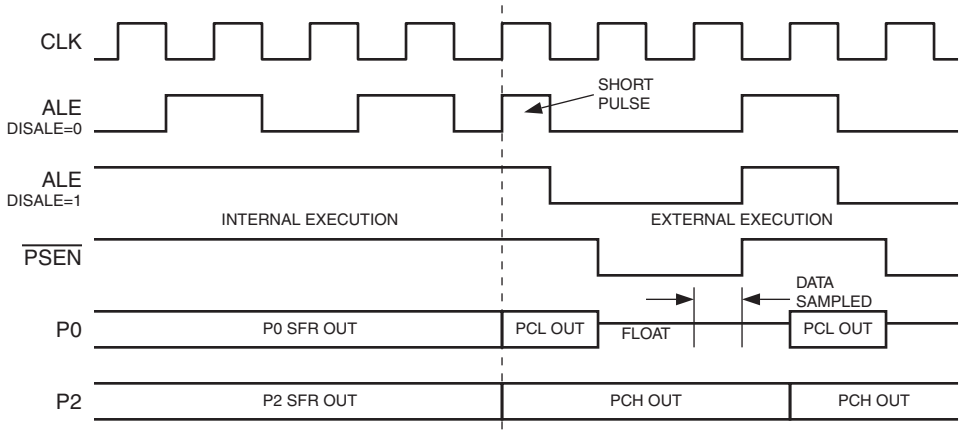

3.1.2 SIG

In addition to the 64K code space, the AT89LP51/52 also supports a 256-byte User Signature Array and a 128-byte Atmel Signature Array that are accessible by the CPU. The Atmel Signature Array is initialized with the Device ID in the factory. The User Signature Array is available for user identification codes or constant parameter data. Data stored in the signature array is not secure. Security bits will disable writes to the array; however, reads by an external device programmer are always allowed.

In order to read from the signature arrays, the SIGEN bit (AUXR1.3) must be set (See Table 5-3 on page 28). While SIGEN is one, MOVC A,@A+DPTR will access the signature arrays. The User Signature Array is mapped from addresses 0100h to 01FFh and the Atmel Signature Array is mapped from addresses 0000h to 007Fh. SIGEN must be cleared before using MOVC to

access the code memory. The User Signature Array may also be modified by the In-Application Programming interface. When IAP = 1 and SIGEN = 1, MOVX @DPTR instructions will access the array (See Section 3.4 on page 23).

3.2 Internal Data Memory

The AT89LP51/52 contains 256 bytes of general SRAM data memory plus 128 bytes of I/O memory mapped into a single 8-bit address space. Access to the internal data memory does not require any configuration. The internal data memory has three address spaces: DATA, IDATA and SFR; as shown in Figure 3-5. Some portions of external data memory are also implemented internally. See "External Data Memory" below for more information.

Figure 3-5. Internal Data Memory Map

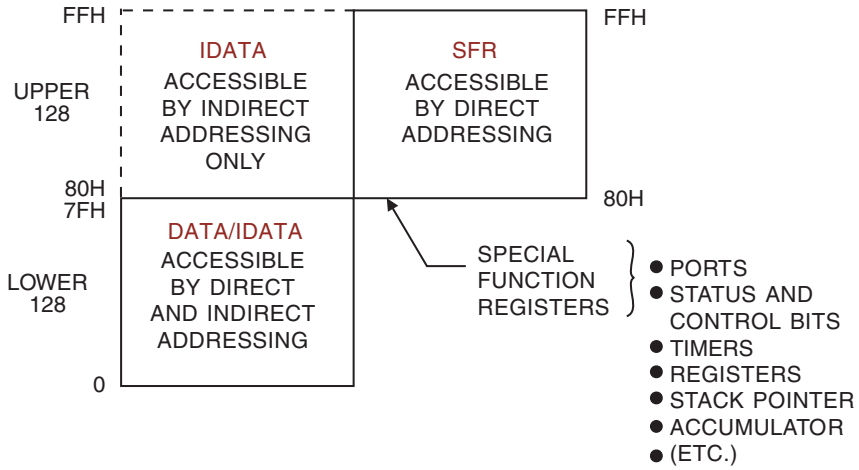

3.2.1 DATA

The first 128 bytes of RAM are directly addressable by an 8-bit address (00H–7FH) included in the instruction. The lowest 32 bytes of DATA memory are grouped into 4 banks of 8 registers each. The RS0 and RS1 bits (PSW.3 and PSW.4) select which register bank is in use. Instructions using register addressing will only access the currently specified bank. The lower 128 bit addresses are also mapped into DATA addresses 20H—2FH.

3.2.2 IDATA

The full 256 byte internal RAM can be indirectly addressed using the 8-bit pointers R0 and R1. The first 128 bytes of IDATA include the DATA space. The hardware stack is also located in the IDATA space.

3.2.3 SFR

The upper 128 direct addresses (80H–FFH) access the I/O registers. I/O registers on AT89LP devices are referred to as Special Function Registers. The SFRs can only be accessed through direct addressing. All SFR locations are not implemented. See Section 4. for a listed of available SFRs.

3.3 External Data Memory

AT89LP microcontrollers support a 16-bit external memory address space for up to 64K bytes of external data memory (XDATA). The external memory space is accessed with the MOVX instructions. Some internal data memory resources are mapped into portions of the external

address space as shown in Figure 3-6. These memory spaces may require configuration before the CPU can access them. The AT89LP51/52 includes 256 bytes of nonvolatile Flash data memory (FDATA).

3.3.1 XDATA

The external data memory space can accommodate up to 64KB of external memory. The AT89LP51/52 uses the standard 8051 external data memory interface with the upper address byte on Port 2, the lower address byte and data in/out multiplexed on Port 0, and the ALE, $\overline{RD}$ and $\overline{WR}$ strobes. XDATA can be accessed with both 16-bit (MOVX @DPTR) and 8-bit (MOVX @Ri) addresses. See Section 3.3.3 on page 18 for more details of the external memory interface.

Some internal data memory spaces are mapped into portions of the XDATA address space. In this case the lower address ranges will access internal resources instead of external memory. Addresses above the range implemented internally will default to XDATA. The AT89LP51/52 supports up to 63.75K or 56K bytes of external memory when using the internally mapped memories. Setting the EXRAM bit (AUXR.1) to one will force all MOVX instructions to access the entire 64KB XDATA regardless of their address (See "AUXR – Auxiliary Control Register" on page 20).

Figure 3-6. External Data Memory Map

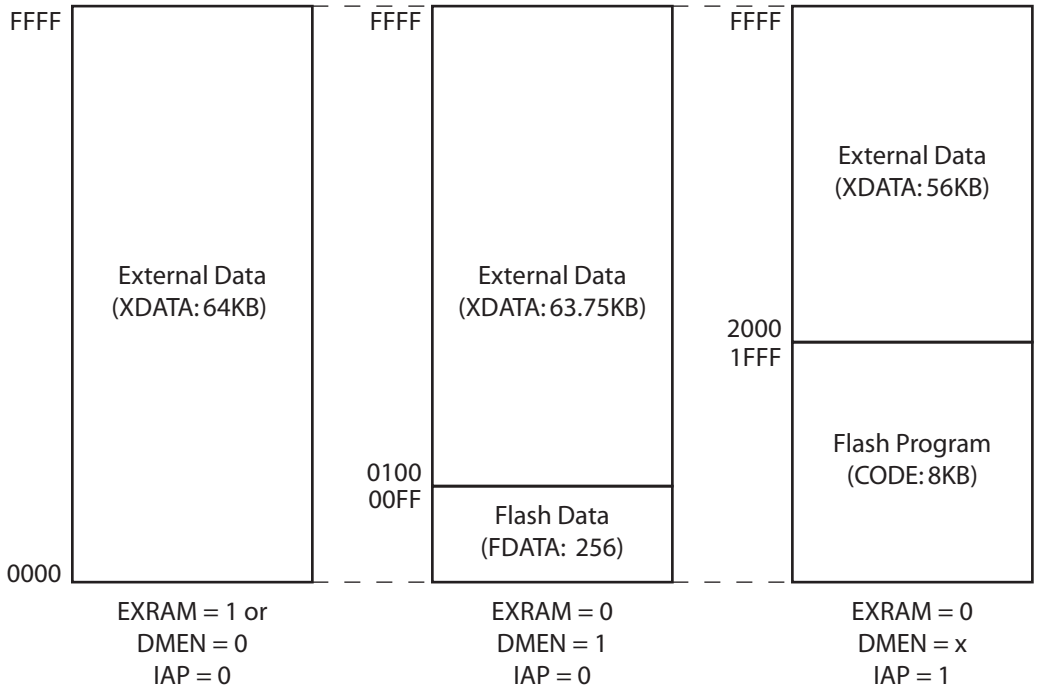

3.3.2 FDATA

The Flash Data Memory is a portion of the external memory space implemented as an internal nonvolatile data memory. Flash Data Memory is enabled by setting the DMEN bit (MEMCON.3) to one. When IAP = 0 and DMEN = 1, the Flash Data Memory is mapped into the FDATA space, at the bottom of the external memory address space, from 0000H to 00FFH. (See Figure 3-6). MOVX instructions to this address range will access the internal nonvolatile memory. FDATA is

not accessible while DMEN = 0. FDATA can be accessed only by 16-bit (MOVX @DPTR) addresses. MOVX @Ri instructions to the FDATA address range will access external memory. Addresses above the FDATA range are mapped to XDATA.

3.3.2.1 *Write Protocol*

The FDATA address space accesses an internal nonvolatile data memory. This address space can be read just like EDATA by issuing a MOVX A,@DPTR; however, writes to FDATA require a more complex protocol and take several milliseconds to complete.

For internal execution the AT89LP51/52 uses an *idle-while-write* architecture where the CPU is placed in an idle state while the write occurs. When the write completes, the CPU will continue executing with the instruction after the MOVX @DPTR,A instruction that started the write. All peripherals will continue to function during the write cycle; however, interrupts will not be serviced until the write completes.

For external execution the AT89LP51/52 uses an *execute-while-write* architecture where the CPU continues to operate while the write occurs. The software should poll the state of the $\overline{\text{BUSY}}$ flag to determine when the write completes. Interrupts must be disabled during the write sequence as the CPU will not be able to vector to the internal interrupt table and care should be taken that the application does not jump to an internal address until the write completes.

To enable write access to the nonvolatile data memory, the MWEN bit (MEMCON.4) must be set to one. When MWEN = 1 and DMEN = 1, MOVX @DPTR,A may be used to write to FDATA. FDATA uses flash memory with a page-based programming model. Flash data memory differs from traditional EEPROM data memory in the method of writing data. EEPROM generally can update a single byte with any value. Flash memory splits programming into write and erase operations. A Flash write can only program zeroes, i.e change ones into zeroes ($1 \rightarrow 0$). Any ones in the write data are ignored. A Flash erase sets an entire page of data to ones so that all bytes become FFH. Therefore after an erase, each byte in the page can only be written once with any possible value. Bytes can be overwritten without an erase as long as only ones are changed into zeroes. However, if even a single bit needs updating from zero to one ($0 \rightarrow 1$); then the contents of the page must first be saved, the entire page must be erased and the zero bits in all bytes (old and new data combined) must be written. Avoiding unnecessary page erases greatly improves the endurance of the memory..

The AT89LP51/52 includes 2 data pages of 128 bytes each. One or more bytes in a page may be written at one time. The AT89LP51/52 includes a temporary page buffer of 64 bytes, or half of a page. Because the page buffer is 64 bytes long, the maximum number of bytes written at one time is 64. Therefore, two write cycles are required to fill the entire 128-byte page, one for the low half page (00H–3FH) and one for the high half page (40H–7FH) as shown in Figure 3-7.

Figure 3-7. Page Programming Structure

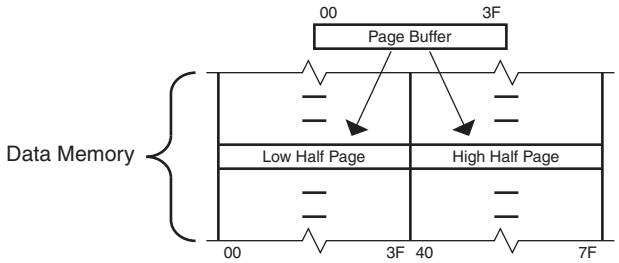

The LDPG bit (MEMCON.5) allows multiple data bytes to be loaded to the temporary page buffer. While LDPG = 1, MOVX @DPTR,A instructions will load data to the page buffer, but will not start a write sequence. Note that a previously loaded byte must not be reloaded prior to the write sequence. To write the half page into the memory, LDPG must first be cleared and then a MOVX @DPTR,A with the final data byte is issued. The address of the final MOVX determines which half page will be written. If a MOVX @DPTR,A instruction is issued while LDPG = 0 without loading any previous bytes, only a single byte will be written. The page buffer is reset after each write operation. Figures 3-8 and Figure 3-9 on page 17 show the difference between byte writes and page writes.

Figure 3-8. FDATA Byte Write

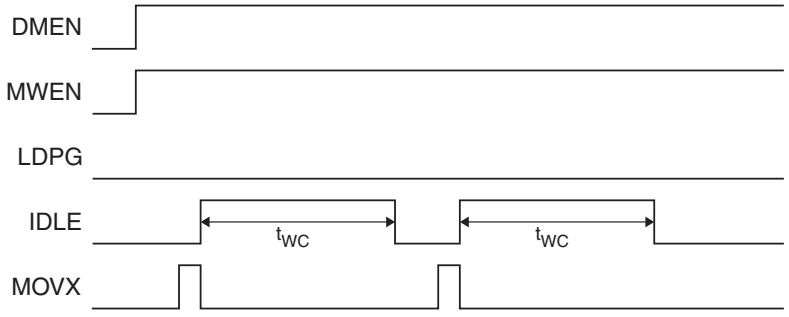

Figure 3-9. FDATA Page Write

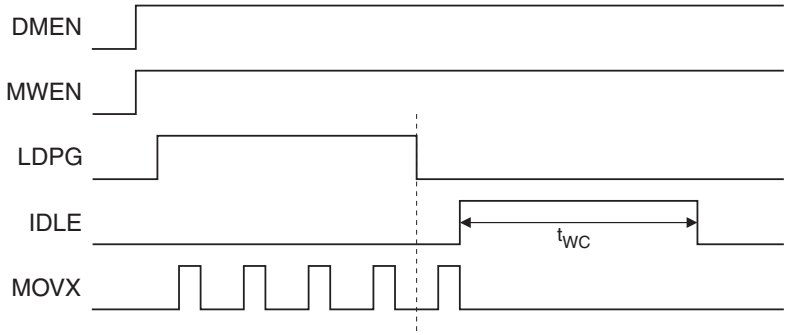

The auto-erase bit AERS (MEMCON.6) can be set to one to perform a page erase automatically at the beginning of any write sequence. The page erase will erase the entire page, i.e. both the low and high half pages. However, the write operation paired with the auto-erase can only program one of the half pages. A second write cycle without auto-erase is required to update the other half page.

Frequently just a few bytes within a page must be updated while maintaining the state of the other bytes. There are two options for handling this situation that allow the Flash Data memory to emulate a traditional EEPROM memory. The simplest method is to copy the entire page into a buffer allocated in RAM, modify the desired byte locations in the RAM buffer, and then load and write back first the low half page (with auto-erase) and then the high half page to the Flash memory. This option requires that at least one page size of RAM is available as a temporary buffer. The second option is to store only one half page in RAM. The unmodified bytes of the other page are loaded directly into the Flash memory's temporary load buffer before loading the updated values of the modified bytes. For example, if just the low half page needs modification, the user must first store the high half page to RAM, followed by reading and loading the unaffected bytes of the low half page into the page buffer. Then the modified bytes of the low half page are stored

to the page buffer before starting the auto-erase sequence. The stored value of the high half page must be written without auto-erase after the programming of the low half page completes. This method reduces the amount of RAM required; however, more software overhead is needed because the read-and-load-back routine must skip those bytes in the page that need to be updated in order to prevent those locations in the buffer from being loaded with the previous data, as this will block the new data from being loaded correctly.

A write sequence will not occur if the Brown-out Detector is active. If a write currently in progress is interrupted by the BOD due to a low voltage condition, the ERR flag will be set.

Table 3-2. MEMCON – Memory Control Register

MEMCON = 96H — Reset Value = 0000 0XXXB

Not Bit Addressable

	IAP	AERS	LDPG	MWEN	DMEN	ERR	$\overline{\text{BUSY}}$	$\overline{\text{WRTINH}}$
Bit	7	6	5	4	3	2	1	0

Symbol	Function
IAP	In-Application Programming Enable. When IAP = 1 and the IAP Fuse is enabled, programming of the CODE/SIG space is enabled and MOVX @DPTR instructions will access CODE/SIG instead of EDATA or FDATA. Clear IAP to disable programming of CODE/SIG and allow access to EDATA and FDATA.
AERS	Auto-Erase Enable. Set to perform an auto-erase of a Flash memory page (CODE, SIG or FDATA) during the next write sequence. Clear to perform write without erase.
LDPG	Load Page Enable. Set to this bit to load multiple bytes to the temporary page buffer. Byte locations may not be loaded more than once before a write. LDPG must be cleared before writing.
MWEN	Memory Write Enable. Set to enable programming of a nonvolatile memory location (CODE, SIG or FDATA). Clear to disable programming of all nonvolatile memories.
DMEN	Data Memory Enable. Set to enable nonvolatile data memory and map it into the FDATA space. Clear to disable nonvolatile data memory.
ERR	Error Flag. Set by hardware if an error occurred during the last programming sequence due to a brownout condition (low voltage on VDD). Must be cleared by software.
$\overline{\text{BUSY}}$	Busy Flag.
$\overline{\text{WRTINH}}$	Write Inhibit Flag. Cleared by hardware when the voltage on VDD has fallen below the minimum programming voltage. Set by hardware when the voltage on VDD is above the minimum programming voltage.

3.3.3 External Data Memory Interface

The AT89LP51/52 uses the standard 8051 external data memory interface with the upper address on Port 2, the lower address and data in/out multiplexed on Port 0, and the ALE, $\overline{\text{RD}}$ and $\overline{\text{WR}}$ strobes. The interface may be used in two different configurations depending on which type of MOVX instruction is used to access XDATA.

Figure 3-10 shows a hardware configuration for accessing up to 64K bytes of external RAM using a 16-bit linear address. Port 0 serves as a multiplexed address/data bus to the RAM. The Address Latch Enable strobe (ALE) is used to latch the lower address byte into an external register so that Port 0 can be freed for data input/output. Port 2 provides the upper address byte throughout the operation. The MOVX @DPTR instructions use Linear Address mode.

Figure 3-10. External Data Memory 16-bit Linear Address Mode

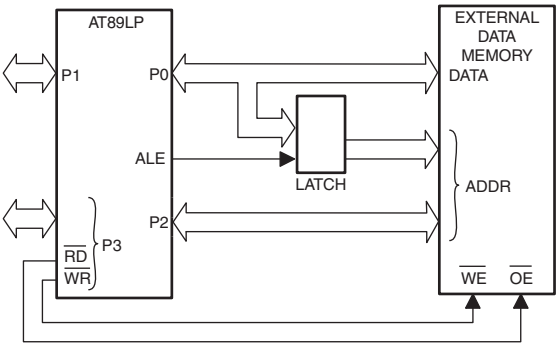

Figure 3-11 shows a hardware configuration for accessing 256-byte blocks of external RAM using an 8-bit paged address. Port 0 serves as a multiplexed address/data bus to the RAM. The ALE strobe is used to latch the address byte into an external register so that Port 0 can be freed for data input/output. The Port 2 I/O lines (or other ports) can provide control lines to page the memory; however, this operation is not handled automatically by hardware. The software application must change the Port 2 register when appropriate to access different pages. The MOVX @Ri instructions use Paged Address mode.

Figure 3-11. External Data Memory 8-bit Paged Address Mode

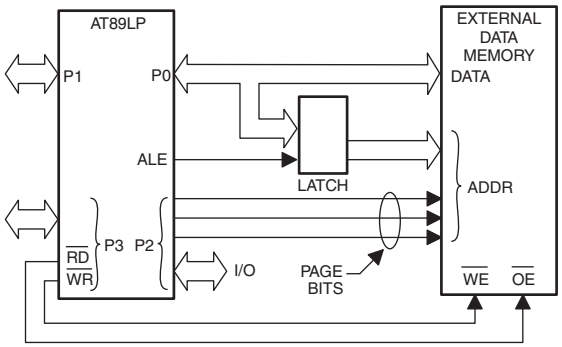

Note that prior to using the external memory interface, $\overline{WR}$ (P3.6) and $\overline{RD}$ (P3.7) must be configured as outputs. See Section 10.1 “Port Configuration” on page 41. P0 and P2 are configured automatically to push-pull output mode when outputting address or data and P0 is automatically tristated when inputting data regardless of the port configuration. The Port 0 configuration will determine the idle state of Port 0 when not accessing the external memory.

Figure 3-12 and Figure 3-13 show examples of external data memory write and read cycles, respectively. The address on P0 and P2 is stable at the falling edge of ALE. The idle state of ALE is controlled by DISALE (AUXR.0). When DISALE = 0 the ALE toggles at a constant rate when not accessing external memory. When DISALE = 1 the ALE is weakly pulled high. DISALE must be one in order to use P4.4 as a general-purpose I/O. The WS bits in AUXR can extended the $\overline{RD}$ and $\overline{WR}$ strobes by 1, 2 or 3 cycles as shown in Figures 3-16, 3-17 and 3-18. If a longer strobe is required, the application can scale the system clock with the clock divider to meet the requirements (See Section 6.4 on page 31).

Table 3-3. AUXR – Auxiliary Control Register

AUXR = 8EH — Reset Value = xxx0 0000B

Not Bit Addressable

	–	–	–	WDIDLE[1]	DISRTO[1] WS1[2]	WS0	EXRAM	DISALE
Bit	7	6	5	4	3	2	1	0

Symbol	Function
WDIDLE	WDT Disable during Idle[1]. When WDIDLE = 0 the WDT continues to count in Idle mode. When WDIDLE = 1 the WDT halts counting in Idle mode.
DISRTO	Disable Reset Output[1]. When DISTRO = 0 the reset pin is driven to the same level as POL when the WDT resets. When DISRTO = 1 the reset pin is input only.
WS[1-0]	Wait State Select. Determines the number of wait states inserted into external memory accesses.

WS1[2]	WS0	Wait States	$\overline{RD}$ / $\overline{WR}$ Strobe Width	ALE to $\overline{RD}$ / $\overline{WR}$ Setup
0	0	0	1 x t_{CYC} (Fast); 3 x t_{CYC} (Compatibility)	1 x t_{CYC} (Fast); 1.5 x t_{CYC} (Compatibility)
0	1	1	2 x t_{CYC} (Fast); 15 x t_{CYC} (Compatibility)	1 x t_{CYC} (Fast); 1.5 x t_{CYC} (Compatibility)
1	0	2	2 x t_{CYC} (Fast)	2 x t_{CYC} (Fast)
1	1	3	3 x t_{CYC} (Fast)	2 x t_{CYC} (Fast)

EXRAM	External RAM Enable. When EXRAM = 0, MOVX instructions can access the internally mapped portions of the address space. Accesses to addresses above internally mapped memory will access external memory. Set EXRAM = 1 to bypass the internal memory and map the entire address space to external memory.
DISALE	ALE Disable. When DISALE = 0 the ALE pulse is active at 1/3 of the system clock frequency in Compatibility mode and 1/2 of the system clock frequency in Fast mode. When DISALES = 1 the ALE is inactive (high) unless an external memory access occurs. DISALE must be set to use P4.4 as a general I/O.

Notes: 1. AUXR.4 and AUXR.3 function as WDIDLE and DISRTO only in Compatibility mode. In Fast mode these bits are located in WDTCON.

2. WS1 is only available in Fast mode. WS1 is forced to 0 in Compatibility mode.

Figure 3-12. Fast Mode External Data Memory Write Cycle (WS = 00B)

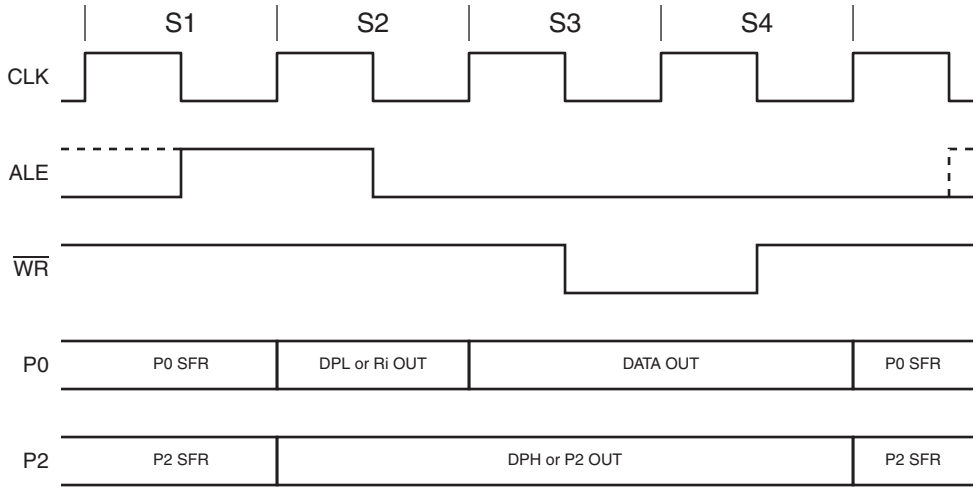

Figure 3-13. Fast Mode External Data Memory Read Cycle (WS = 00B)

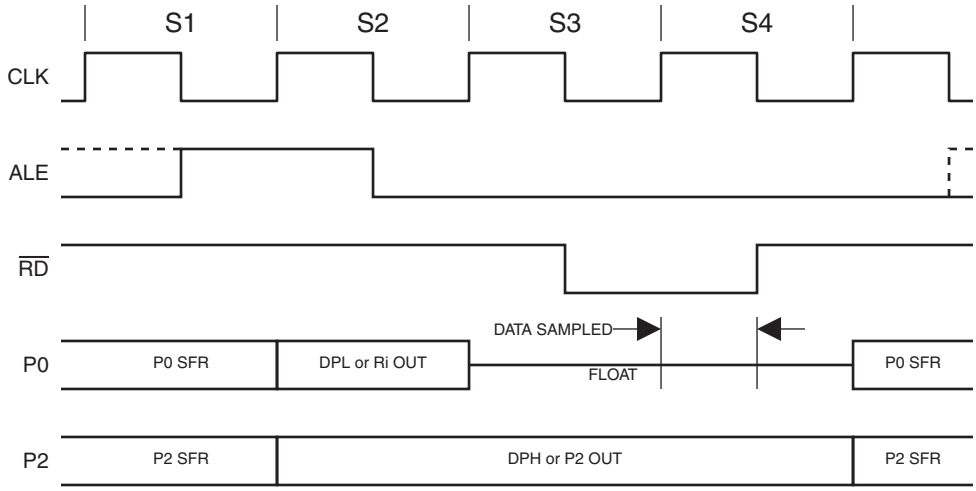

Figure 3-14. Compatibility Mode External Data Memory Write Cycle (WS0 = 0)

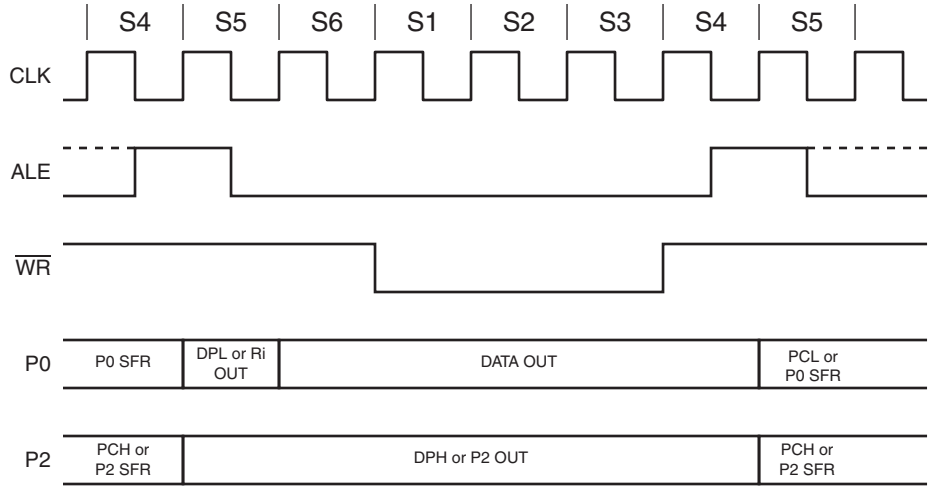

Figure 3-15. Compatibility Mode External Data Memory Read Cycle (WS0 = 0)

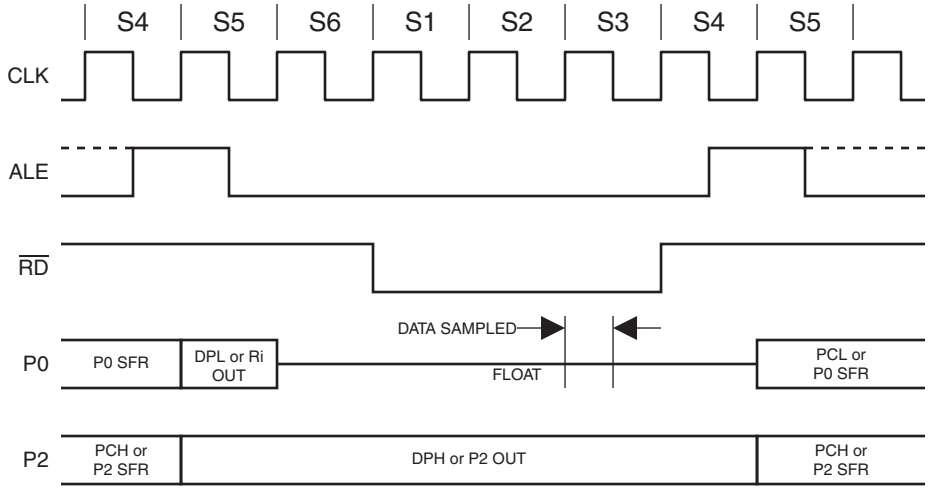

Figure 3-16. MOVX with One Wait State (WS = 01B)

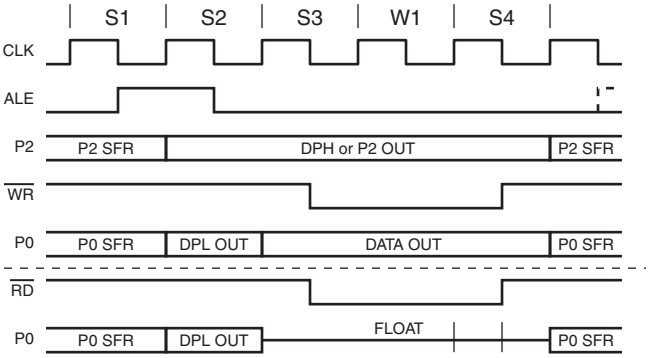

Figure 3-17. MOVX with Two Wait States (WS = 10B)

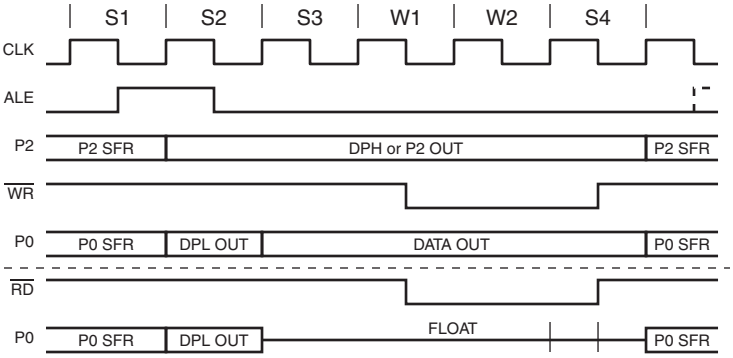

Figure 3-18. MOVX with Three Wait States (WS = 11B)

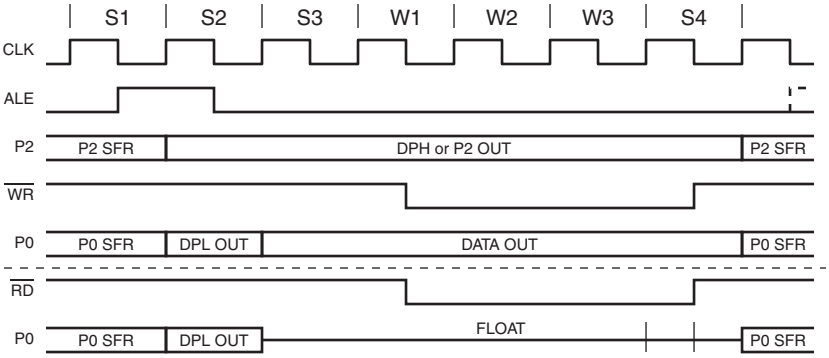

3.4 In-Application Programming (IAP)

The AT89LP51/52 supports In-Application Programming (IAP), allowing the program memory to be modified during execution. IAP can be used to modify the user application on the fly or to use program memory for nonvolatile data storage. The same page structure write protocol for FDATA also applies to IAP (See Section 3.3.2.1 “Write Protocol” on page 16). The CPU is always placed in idle while modifying the program memory. When the write completes, the CPU will continue executing with the instruction after the MOVX @DPTR,A instruction that started the write.

To enable access to the program memory, the IAP bit (MEMCON.7) must be set to one and the IAP User Fuse must be enabled. The IAP User Fuse can disable all IAP operations. When this fuse is disabled, the IAP bit will be forced to 0. While IAP is enabled, all MOVX @DPTR instructions will access the CODE space instead of EDATA/FDATA/XDATA. IAP also allows reprogramming of the User Signature Array when SIGEN = 1. The IAP access settings are summarized in Table 3-4 and Table 3-5.

Table 3-4. IAP Access Settings for AT89LP52

IAP	SIGEN	DMEN	MOVX @DPTR	MOVC @DPTR
0	0	0	XDATA (0000–FFFFH)	CODE (0000–1FFFH) XCODE (2000–FFFFH)
0	0	1	FDATA (0000–00FFH) XDATA (0100–FFFFH)	CODE (0000–1FFFH) XCODE (2000–FFFFH)
0	1	0	XDATA (0000–FFFFH)	SIG (0000–01FFH)
0	1	1	FDATA (0000–00FFH) XDATA (0100–FFFFH)	SIG (0000–01FFH)
1	0	X	CODE (0000–1FFFH) XDATA (2000–FFFFH)	CODE (0000–1FFFH) XCODE (2000–FFFFH)
1	1	X	SIG (0000–01FFH) XDATA (2000–FFFFH)	SIG (0000–01FFH)

Table 3-5. IAP Access Settings for AT89LP51

IAP	SIGEN	DMEN	MOVX @DPTR	MOVC @DPTR
0	0	0	XDATA (0000–FFFFH)	CODE (0000–0FFFH) XCODE (1000–FFFFH)
0	0	1	FDATA (0000–00FFH) XDATA (0100–FFFFH)	CODE (0000–0FFFH) XCODE (1000–FFFFH)
0	1	0	XDATA (0000–FFFFH)	SIG (0000–01FFH)
0	1	1	FDATA (0000–00FFH) XDATA (0100–FFFFH)	SIG (0000–01FFH)
1	0	X	CODE (0000–0FFFH) XDATA (1000–FFFFH)	CODE (0000–0FFFH) XCODE (1000–FFFFH)
1	1	X	SIG (0000–01FFH) XDATA (1000–FFFFH)	SIG (0000–01FFH)

Note: When In-Application programming is not required, it is recommended that the IAP User Fuse be disabled.

4. Special Function Registers

A map of the on-chip memory area called the Special Function Register (SFR) space is shown in Table 4-1.

Note that not all of the addresses are occupied, and unoccupied addresses may not be implemented on the chip. Read accesses to these addresses will in general return random data, and write accesses will have an indeterminate effect. User software should not write to these unlisted locations, since they may be used in future products to invoke new features.

Table 4-1. AT89LP51/52 SFR Map and Reset Values

	8	9	A	B	C	D	E	F	
0F8H									0FFH
0F0H	B 0000 0000								0F7H
0E8H									0EFH
0E0H	ACC 0000 0000								0E7H
0D8H									0DFH
0D0H	PSW 0000 0000								0D7H
0C8H	T2CON 0000 0000	T2MOD 0000 0000	RCAP2L 0000 000	RCAP2H 0000 0000	TL2 0000 000	TH2 0000 0000			0CFH
0C0H	P4 1111 1111	PMOD (2)							0C7H
0B8H	IP xx00 0000	SADEN 0000 0000							0BFH
0B0H	P3 1111 1111							IPH xx00 0000	0B7H
0A8H	IE 0x00 0000	SADDR 0000 0000							0AFH
0A0H	P2 1111 1111		AUXR1 0000 00x0				WDTRST (write-only)	WDTCON 0000 0xx0	0A7H
98H	SCON 0000 0000	SBUF xxxx xxxx							9FH
90H	P1 1111 1111	TCONB 000x xxxx					MEMCON 0000 00xx		97H
88H	TCON 0000 0000	TMOD 0000 0000	TL0 0000 0000	TL1 0000 0000	TH0 0000 0000	TH1 0000 0000	AUXR 0000 0000	CLKREG (3)	8FH
80H	P0 1111 1111	SP 0000 0111	DP0L 0000 0000	DP0H 0000 0000	DP1L 0000 0000	DP1H 0000 0000		PCON 000x 0000	87H
	0	1	2	3	4	5	6	7	

Notes: 1. All SFRs in the left-most column are bit-addressable.

2. Reset value is 0101 0101B when Tristate-Port Fuse is enabled and 0000 0011B when disabled.

3. Reset value is 0101 0010B when Compatibility mode is enabled and 0000 0000B when disabled.

5. Enhanced CPU

The AT89LP51/52 uses an enhanced 8051 CPU that runs at 6 to 12 times the speed of standard 8051 devices (or 3 to 6 times the speed of X2 8051 devices). The increase in performance is due to two factors. First, the CPU fetches one instruction byte from the code memory every clock cycle. Second, the CPU uses a simple two-stage pipeline to fetch and execute instructions in parallel. This basic pipelining concept allows the CPU to obtain up to 1 MIPS per MHz. The AT89LP51/52 also has a Compatibility mode that preserves the 12-clock machine cycle of standard 8051s like the AT89S51/52.

5.1 Fast Mode

Fast (Single-Cycle) mode must be enabled by clearing the Compatibility User Fuse. (See "User Configuration Fuses" on page 86.) In this mode one instruction byte is fetched every system clock cycle. The 8051 instruction set allows for instructions of variable length from 1 to 3 bytes. In a single-clock-per-byte-fetch system this means each instruction takes at least as many clocks as it has bytes to execute. The majority of instructions in the AT89LP51/52 follow this rule: the instruction execution time in system clock cycles equals the number of bytes per instruction, with a few exceptions. Branches and Calls require an additional cycle to compute the target address and some other complex instructions require multiple cycles. See "Instruction Set Summary" on page 75. for more detailed information on individual instructions.

Example of Fast mode instructions are shown in Figure 5-1. Note that Fast mode instructions take three times as long to execute if they are fetched from external program memory.

Figure 5-1. Instruction Execution Sequences in Fast Mode

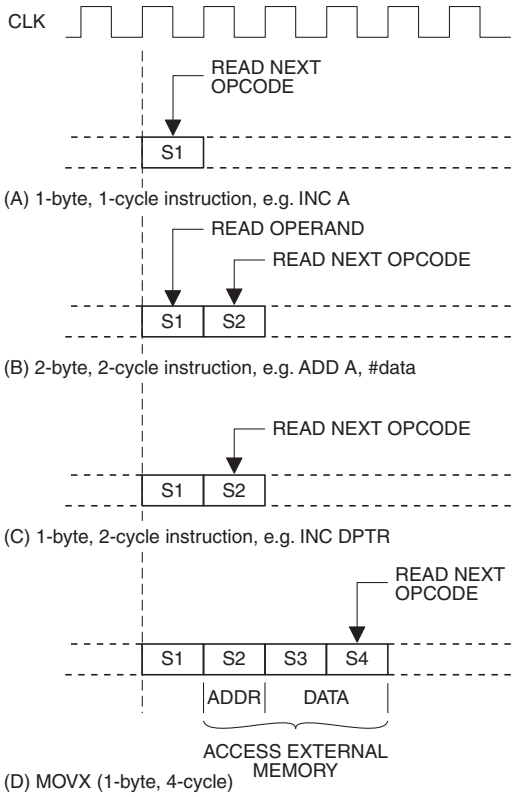

5.2 Compatibility Mode

Compatibility (12-Clock) mode is enabled by default from the factory or by setting the Compatibility User Fuse. In Compatibility mode instruction bytes are fetched every three system clock cycles and the CPU operates with 6-state machine cycles and a divide-by-2 system clock for 12 oscillator periods per machine cycle. Standard instructions execute in1, 2 or 4 machine cycles. Instruction timing in this mode is compatible with standard 8051s such as the AT89S51/52.

Compatibility mode can be used to preserve the execution profiles of legacy applications. For a summary of differences between Fast and Compatibility modes see Table 2-3 on page 10. Examples of Compatibility mode instructions are shown in Figure 5-2.

Figure 5-2. Instruction Execution Sequences in Compatibility Mode

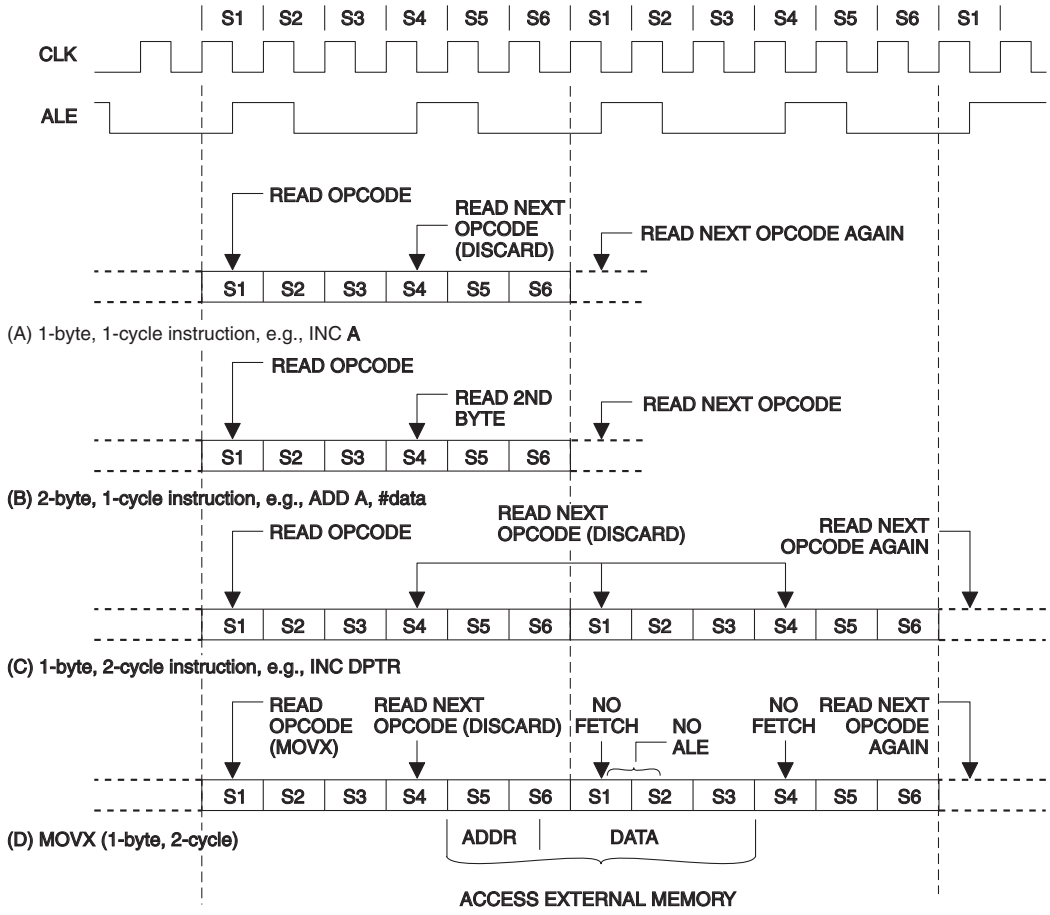

5.3 Enhanced Dual Data Pointers

The AT89LP51/52 provides two 16-bit data pointers: DPTR0 formed by the register pair DPOL and DPOH (82H an 83H), and DPTR1 formed by the register pair DP1L and DP1H (84H and 85H). The data pointers are used by several instructions to access the program or data memories. The Data Pointer Configuration Register (AUXR1) controls operation of the dual data pointers (Table 5-3 on page 28). The DPS bit in AUXR1 selects which data pointer is currently referenced by instructions including the DPTR operand. Each data pointer may be accessed at its respective SFR addresses regardless of the DPS value. The AT89LP51/52 provides two methods for fast context switching of the data pointers:

- Bit 2 of AUXR1 is hard-wired as a logic 0. The DPS bit may be toggled (to switch data pointers) simply by incrementing the AUXR1 register, without altering other bits in the register unintentionally. This is the preferred method when only a single data pointer will be used at one time.

```
EX:    INC  AUXR1  ; Toggle DPS
```

- In some cases, both data pointers must be used simultaneously. To prevent frequent toggling of DPS, the AT89LP51/52 supports a prefix notation for selecting the opposite data pointer per instruction. All DPTR instructions, with the exception of JMP @A+DPTR, when prefixed with an 0A5H opcode will use the inverse value of DPS ($\overline{DPS}$) to select the data pointer. Some assemblers may support this operation by using the /DPTR operand. For example, the following code performs a block copy within EDATA:

```
       MOV  AUXR1, #00H     ; DPS = 0
       MOV  DPTR, #SRC      ; load source address to dptr0
       MOV  /DPTR, #DST     ; load destination address to dptr1
       MOV  R7, #BLKSIZE    ; number of bytes to copy
COPY:  MOVX A, @DPTR        ; read source (dptr0)
       INC  DPTR            ; next src (dptr0+1)
       MOVX @/DPTR, A       ; write destination (dptr1)
       INC  /DPTR           ; next dst (dptr1+1)
       DJNZ R7, COPY
```

For assemblers that do not support this notation, the 0A5H prefix must be declared in-line:

```
EX:    DB   0A5H
       INC  DPTR            ; equivalent to INC /DPTR
```

A summary of data pointer instructions with fast context switching is listed in Table 5-1.

Table 5-1. Data Pointer Instructions

Instruction	Operation	
	DPS = 0	**DPS = 1**
JMP @A+DPTR	JMP @A+DPTR0	JMP @A+DPTR1
MOV DPTR, #data16	MOV DPTR0, #data16	MOV DPTR1, #data16
MOV /DPTR, #data16	MOV DPTR1, #data16	MOV DPTR0, #data16
INC DPTR	INC DPTR0	INC DPTR1
INC /DPTR	INC DPTR1	INC DPTR0
MOVC A,@A+DPTR	MOVC A,@A+DPTR0	MOVC A,@A+DPTR1
MOVC A,@A+/DPTR	MOVC A,@A+DPTR1	MOVC A,@A+DPTR0
MOVX A,@DPTR	MOVX A,@DPTR0	MOVX A,@DPTR1
MOVX A,@/DPTR	MOVX A,@DPTR1	MOVX A,@DPTR0
MOVX @DPTR, A	MOVX @DPTR0, A	MOVX @DPTR1, A
MOVX @/DPTR, A	MOVX @DPTR1, A	MOVX @DPTR0, A

5.3.1 Data Pointer Update

The Dual Data Pointers on the AT89LP51/52 include two features that control how the data pointers are updated. The data pointer decrement bits, DPD1 and DPD0 in AUXR1, configure the INC DPTR instruction to act as DEC DPTR. The resulting operation will depend on DPS as shown in Table 5-2. These bits also control the direction of auto-updates during MOVC and MOVX.

Table 5-2. Data Pointer Decrement Behavior

		Equivalent Operation for INC DPTR and INC /DPTR			
		DPS = 0		DPS = 1	
DPD1	DPD0	INC DPTR	INC /DPTR	INC DPTR	INC /DPTR
0	0	INC DPTR0	INC DPTR1	INC DPTR1	INC DPTR0
0	1	DEC DPTR0	INC DPTR1	INC DPTR1	DEC DPTR0
1	0	INC DPTR0	DEC DPTR1	DEC DPTR1	INC DPTR0
1	1	DEC DPTR0	DEC DPTR1	DEC DPTR1	DEC DPTR0

Table 5-3. AUXR1 – Data Pointer Configuration Register

AUXR1 = A2H Reset Value = 0000 00X0B

Not Bit Addressable

	DPU1	DPU0	DPD1	DPD0	SIGEN	0	–	DPS
Bit	7	6	5	4	3	2	1	0

Symbol	Function
DPU1	Data Pointer 1 Update. When set, MOVX @DPTR and MOVC @DPTR instructions that use DPTR1 will also update DPTR1 based on DPD1. If DPD1 = 0 the operation is post-increment and if DPD1 = 1 the operation is post-decrement. When DPU1 = 0, DPTR1 is not updated.
DPU0	Data Pointer 0 Update. When set, MOVX @DPTR and MOVC @DPTR instructions that use DPTR0 will also update DPTR0 based on DPD0. If DPD0 = 0 the operation is post-increment and if DPD0 = 1 the operation is post-decrement. When DPU0 = 0, DPTR0 is not updated.
DPD1	Data Pointer 1 Decrement. When set, INC DPTR instructions targeted to DPTR1 will decrement DPTR1. When cleared, INC DPTR instructions will increment DPTR1. DPD1 also determines the direction of auto-update for DPTR1 when DPU1 = 1.
DPD0	Data Pointer 0 Decrement. When set, INC DPTR instructions targeted to DPTR0 will decrement DPTR0. When cleared, INC DPTR instructions will increment DPTR0. DPD0 also determines the direction of auto-update for DPTR0 when DPU0 = 1.
SIGEN	Signature Enable. When SIGEN = 1 all MOVC @DPTR instructions and all IAP accesses will target the signature array memory. When SIGEN = 0, all MOVC and IAP accesses target CODE memory.
DPS	Data Pointer Select. DPS selects the active data pointer for instructions that reference DPTR. When DPS = 0, DPTR will target DPTR0 and /DPTR will target DPTR1. When DPS = 1, DPTR will target DPTR1 and /DPTR will target DPTR0.

The data pointer update bits, DPU1 and DPU0, allow MOVX @DPTR and MOVC @DPTR instructions to update the selected data pointer automatically in a post-increment or post-decrement fashion. The direction of update depends on the DPD1 and DPD0 bits as shown in Table 5-4. These bits can be used to make block copy routines more efficient.

Table 5-4. Data Pointer Auto-Update

		Update Operation for MOVX and MOVC (DPU1 = 1 & DPU0 = 1)			
		DPS = 0		DPS = 1	
DPD1	DPD0	DPTR	/DPTR	DPTR	/DPTR
0	0	DPTR0++	DPTR1++	DPTR1++	DPTR0++
0	1	DPTR0--	DPTR1++	DPTR1++	DPTR0--
1	0	DPTR0++	DPTR1--	DPTR1--	DPTR0++
1	1	DPTR0--	DPTR1--	DPTR1--	DPTR0--

6. System Clock

The system clock is generated directly from one of three selectable clock sources. The three sources are the on-chip crystal oscillator, external clock source, and internal RC oscillator. A diagram of the clock subsystem is shown in Figure 6-1. The on-chip crystal oscillator may also be configured for low or high power operation. The clock source is selected by the Clock Source User Fuses as shown in Table 6-1. See "User Configuration Fuses" on page 86. By default, in Fast mode no internal clock division is used to generate the CPU clock from the system clock. In Compatibility mode the default is to divide the oscillator output by two. The system clock divider may be used to prescale the system clock with other values. The choice of clock source also affects the start-up time after a POR, BOD or Power-down event (See "Reset" on page 32 or "Power-down Mode" on page 35)

Figure 6-1. Clock Subsystem Diagram

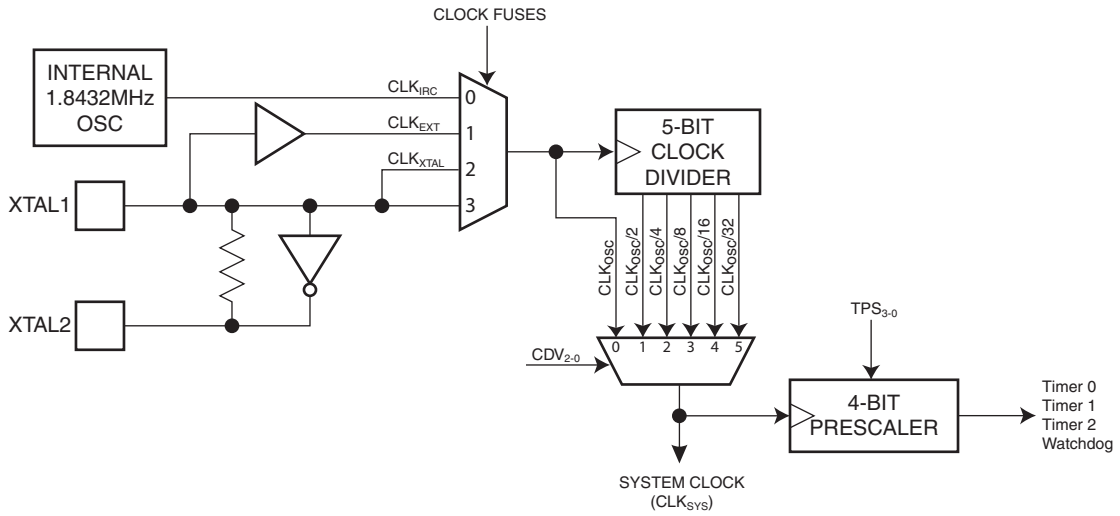

Table 6-1. Clock Source Settings

Clock Source Fuse 1	Clock Source Fuse 0	Selected Clock Source
1	1	High Power Crystal Oscillator (f > 12 MHz)
1	0	Low Power Crystal Oscillator (f ≤12 MHz)
0	1	External Clock on XTAL1
0	0	Internal 1.8432 MHz Auxiliary Oscillator

6.1 Crystal Oscillator

When enabled, the internal inverting oscillator amplifier is connected between XTAL1 and XTAL2 for connection to an external quartz crystal or ceramic resonator. The oscillator may operate in either high-power or low-power mode. Low-speed mode is intended for crystals of 12 MHz or less and consumes less power than the higher speed mode. The configuration as shown in Figure 6-2 applies for both high and low power oscillators. Note that in some cases, external capacitors C1 and C2 may **NOT** be required due to the on-chip capacitance of the XTAL1 and XTAL2 inputs (approximately 10 pF each). When using the crystal oscillator, P4.6 and P4.7 will have their inputs and outputs disabled. Also, XTAL2 in crystal oscillator mode should not be used to directly drive a board-level clock without a buffer.

An optional 5 MΩ on-chip resistor can be connected between XTAL1 and GND. This resistor can improve the startup characteristics of the oscillator especially at higher frequencies. The resistor can be enabled/disabled with the R1 User Fuse (See “User Configuration Fuses” on page 86.)

Figure 6-2. Crystal Oscillator Connections

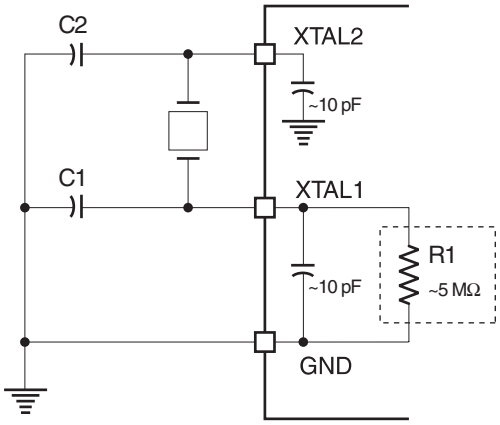

Note: 1. C1, C2 = 5 pF ±5pF for Crystals
= 5 pF ±5pF for Ceramic Resonators

6.2 External Clock Source

The external clock option disables the oscillator amplifier and allows XTAL1 to be driven directly by an external clock source as shown in Figure 6-3. XTAL2 may be left unconnected, used as general purpose I/O P4.7, or configured to output a divided version of the system clock.

Figure 6-3. External Clock Drive Configuration

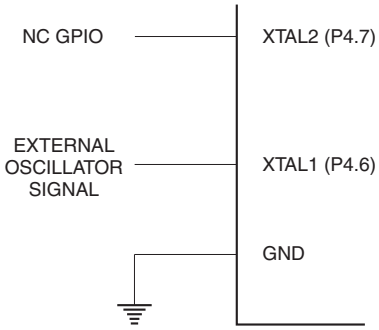

6.3 Internal RC Oscillator

The AT89LP51/52 has an Internal Auxiliary oscillator tuned to 1.8432 MHz ±2.0%. When enabled as the clock source, XTAL1 and XTAL2 may be used as P4.6 and P4.7 respectively.

6.4 System Clock Divider

The CDV_{2-0} bits in CLKREG allow the system clock to be divided down from the selected clock source by powers of 2. The clock divider provides users with a greater frequency range when using the Internal Oscillator. For example, to achieve a 230.4 kHz system frequency when using the RC oscillator, CDV_{2-0} should be set to 011B for divide-by-8 operation. The divider can also be used to reduce power consumption by decreasing the operational frequency during non-critical periods. The resulting system frequency is given by the following equation:

$$f_{SYS} = \frac{f_{OSC}}{2^{CDV}}$$

where f_{OSC} is the frequency of the selected clock source. The clock divider will prescale the clock for the CPU and all peripherals. The value of CDV may be changed at any time without interrupting normal execution. Changes to CDV are synchronized such that the system clock will not pass through intermediate frequencies. When CDV is updated, the new frequency will take affect within a maximum period of 32 x t_{OSC}.

In Compatibility mode the divider defaults to divide-by-2 and and in Fast mode it defaults to no division.

Table 6-2. CLKREG – Clock Control Register

CLKREG = 8FH — Reset Value = 0?0? 00?0B

Not Bit Addressable

	TPS3	TPS2	TPS1	TPS0	CDV2	CDV1	CDV0	—
Bit	7	6	5	4	3	2	1	0

Symbol	Function
TPS[3-0]	Timer Prescaler. The Timer Prescaler selects the time base for Timer 0, Timer 1, Timer 2 and the Watchdog Timer. The prescaler is implemented as a 4-bit binary down counter. When the counter reaches zero it is reloaded with the value stored in the TPS bits to give a division ratio between 1 and 16. By default the timers will count every clock cycle in Fast mode (TPS = 0000B) and every six cycles in Compatibility mode (TPS = 0101B).
CDV[2-0]	System Clock Division. Determines the frequency of the system clock relative to the oscillator clock source. CDIV2 CDIV1 CDIV0 System Clock Frequency 0 0 0 $f_{OSC}/1$ 0 0 1 $f_{OSC}/2$ 0 1 0 $f_{OSC}/4$ 0 1 1 $f_{OSC}/8$ 1 0 0 $f_{OSC}/16$ 1 0 1 $f_{OSC}/32$ 1 1 0 Reserved 1 1 1 Reserved

Note: The reset value of CLKREG is 0000000B in Fast mode and 01010010B in Compatibility mode.

7. Reset

During reset, all I/O Registers are set to their initial values, the port pins are set to their default mode, and the program starts execution from the Reset Vector, 0000H. The AT89LP51/52 has five sources of reset: power-on reset, brown-out reset, external reset, watchdog reset, and software reset.

7.1 Power-on Reset

A Power-on Reset (POR) is generated by an on-chip detection circuit. The detection level V_{POR} is nominally 1.4V. The POR is activated whenever V_{DD} is below the detection level. The POR circuit can be used to trigger the start-up reset or to detect a major supply voltage failure. The POR circuit ensures that the device is reset from power-on. A power-on sequence is shown in Figure 7-1. When V_{DD} reaches the Power-on Reset threshold voltage V_{POR}, an initialization sequence lasting t_{POR} is started. When the initialization sequence completes, the start-up timer determines how long the device is kept in POR after V_{DD} rise. The start-up timer does not begin counting until after V_{DD} reaches the Brown-out Detector (BOD) threshold voltage V_{BOD}. The POR signal is activated again, without any delay, when V_{DD} falls below the POR threshold level. A Power-on Reset (i.e. a cold reset) will set the POF flag in PCON. The internally generated reset can be extended beyond the power-on period by holding the RST pin active longer than the time-out.

Figure 7-1. Power-on Reset Sequence

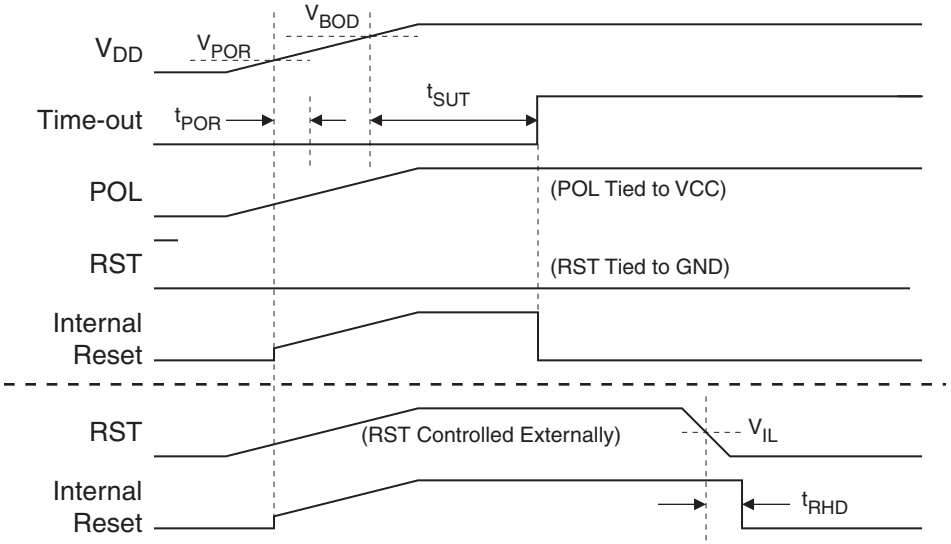

Note: t_{POR} is approximately 143 µs ± 5%.

The start-up timer delay is user-configurable with the Start-up Time User Fuses and depends on the clock source (Table 7-1). The Start-Up Time fuses also control the length of the start-up time after a Brown-out Reset or when waking up from Power-down during internally timed mode. The start-up delay should be selected to provide enough settling time for V_{DD} and the selected clock source. The device operating environment (supply voltage, frequency, temperature, etc.) must meet the minimum system requirements before the device exits reset and starts normal operation. The RST pin may be held active externally until these conditions are met.

Table 7-1. Start-up Timer Settings

SUT Fuse 1	SUT Fuse 0	Clock Source	t_{SUT} (± 5%) µs
0	0	Internal RC/External Clock	16
		Crystal Oscillator	1024
0	1	Internal RC/External Clock	512
		Crystal Oscillator	2048
1	0	Internal RC/External Clock	1024
		Crystal Oscillator	4096
1	1	Internal RC/External Clock	4096
		Crystal Oscillator	16384

7.2 Brown-out Reset

The AT89LP51/52 has an on-chip Brown-out Detection (BOD) circuit for monitoring the V_{DD} level during operation by comparing it to a fixed trigger level. The trigger level V_{BOD} for the BOD is nominally 2.0V. The purpose of the BOD is to ensure that if V_{DD} fails or dips while executing at speed, the system will gracefully enter reset without the possibility of errors induced by incorrect execution. A BOD sequence is shown in Figure 7-2. When V_{DD} decreases to a value below the trigger level V_{BOD}, the internal reset is immediately activated. When V_{DD} increases above the trigger level plus about 200 mV of hysteresis, the start-up timer releases the internal reset after the specified time-out period has expired (Table 7-1).

Figure 7-2. Brown-out Detector Reset

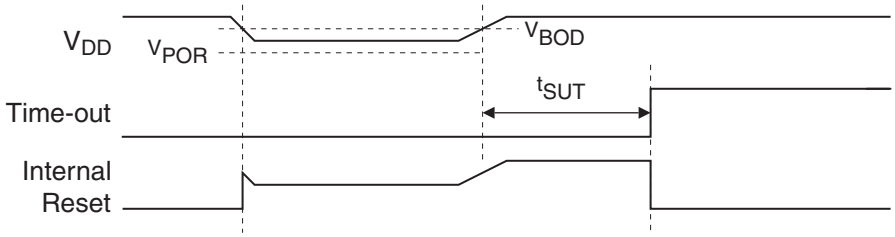

The AT89LP51/52 allows for a wide V_{DD} operating range. The on-chip BOD may not be sufficient to prevent incorrect execution if V_{BOD} is lower than the minimum required V_{DD} range, such as when a 5.0V supply is coupled with high frequency operation. In such cases an external Brown-out Reset circuit connected to the RST pin may be required.

7.3 External Reset

The RST pin of the AT89LP51/52 can function as either an active-low reset input or as an active-high reset input. The polarity of the RST pin is selectable using the POL pin (formerly $\overline{EA}$). When POL is high the RST pin is active high with an on-chip pull-down resistor tied to GND. When POL is low the RST pin is active low with an on-chip pull-up resistor tied to V_{DD}. The RST pin structure is shown in Figure 7-3. In Compatibility mode the reset pin is sampled every six clock cycles and must be held active for at least twelve clock cycles to trigger the internal reset. In Fast mode the reset pin is sampled every clock cycle and must be held active for at least two clock cycles to trigger the internal reset.

The AT89LP51/52 includes an on-chip Power-On Reset and Brown-out Detector circuit that ensures that the device is reset from system power up. In most cases a RC startup circuit is not required on the RST pin, reducing system cost, and the RST pin may be left unconnected if a board-level reset is not present.

Note: RST also serves as the In-System Programming (ISP) enable. ISP is enabled when the external reset pin is held active. When ISP is disabled by fuse, ISP may only be entered by pulling RST active during power-up. If this behavior is necessary, it is recommended to use an active-low reset so that ISP can be entered by shorting RST to GND at power-up.

Figure 7-3. Reset Pin Structure

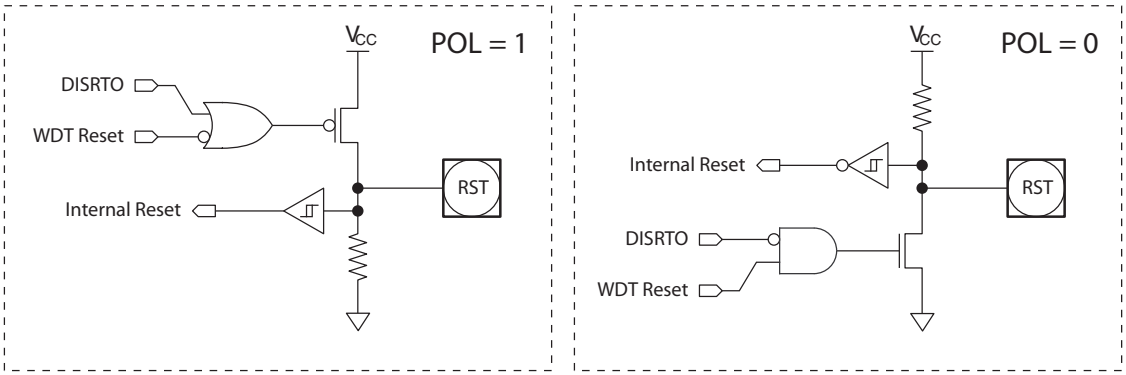

7.4 Watchdog Reset

When the Watchdog times out, it will generate a reset pulse lasting 49 clock cycles. By default this pulse is also output on the RST pin. To disable the RST output the DISRTO bit in AUXR (Compatibility mode) or WDTCON (Fast mode) must be set to one. Watchdog reset will set the WDTOVF flag in WDTCON. To prevent a Watchdog reset, the watchdog reset sequence 1EH/E1H must be written to WDTRST before the Watchdog times out. See “Programmable Watchdog Timer” on page 73. for details on the operation of the Watchdog.

7.5 Software Reset

The CPU may generate a 49-clock cycle reset pulse by writing the software reset sequence 5AH/A5H to the WDRST register. A software reset will set the SWRST bit in WDTCON. See “Software Reset” on page 73 for more information on software reset. Writing any sequences other than 5AH/A5H or 1EH/E1H to WDTRST will generate an immediate reset and set both WDTOVF and SWRST to flag an error. Software reset will also drive the RST pin active unless DISRTO is set.

8. Power Saving Modes

The AT89LP51/52 supports two different power-reducing modes: Idle and Power-down. These modes are accessed through the PCON register. Additional steps may be required to achieve the lowest possible power consumption while using these modes.

8.1 Idle Mode

Setting the IDL bit in PCON enters idle mode. Idle mode halts the internal CPU clock. The CPU state is preserved in its entirety, including the RAM, stack pointer, program counter, program status word, and accumulator. The Port pins hold the logic states they had at the time that Idle was activated. Idle mode leaves the peripherals running in order to allow them to wake up the

CPU when an interrupt is generated. The timer and UART peripherals continue to function during Idle. If these functions are not needed during idle, they should be explicitly disabled by clearing the appropriate control bits in their respective SFRs. The watchdog may be selectively enabled or disabled during Idle by setting/clearing the WDIDLE bit. The Brown-out Detector is always active during Idle. Any enabled interrupt source or reset may terminate Idle mode. When exiting Idle mode with an interrupt, the interrupt will immediately be serviced, and following RETI the next instruction to be executed will be the one following the instruction that put the device into Idle.

The power consumption during Idle mode can be further reduced by prescaling down the system clock using the System Clock Divider (Section 6.4 on page 31). Be aware that the clock divider will affect all peripheral functions and baud rates may need to be adjusted to maintain their rate with the new clock frequency.

Table 8-1. PCON – Power Control Register

PCON = 87H — Reset Value = 000X 0000B

Not Bit Addressable

	SMOD1	SMOD0	PWDEX	POF	GF1	GF0	PD	IDL
Bit	7	6	5	4	3	2	1	0

Symbol	Function
SMOD1	Double Baud Rate bit. Doubles the baud rate of the UART in Modes 1, 2, or 3.
SMOD0	Frame Error Select. When SMOD0 = 1, SCON.7 is SM0. When SMOD0 = 1, SCON.7 is FE. Note that FE will be set after a frame error regardless of the state of SMOD0.
PWDEX	Power-down Exit Mode. When PWDEX = 0, wake up from Power-down is externally controlled. When PWDEX = 1, wake up from Power-down is internally timed.
POF	Power Off Flag. POF is set to “1” during power up (i.e. cold reset). It can be set or reset under software control and is not affected by RST or BOD (i.e. warm resets).
GF1, GF0	General-purpose Flags
PD	Power-down bit. Setting this bit activates power-down operation. The PD bit is cleared automatically by hardware when waking up from power-down.
IDL	Idle Mode bit. Setting this bit activates Idle mode operation. The IDL bit is cleared automatically by hardware when waking up from idle

8.2 Power-down Mode

Setting the Power-down (PD) bit in PCON enters Power-down mode. Power-down mode stops the oscillator, disables the BOD and powers down the Flash memory in order to minimize power consumption. Only the power-on circuitry will continue to draw power during Power-down. During Power-down, the power supply voltage may be reduced to the RAM keep-alive voltage. The RAM contents will be retained, but the SFR contents are not guaranteed once V_{DD} has been reduced. Power-down may be exited by external reset, power-on reset, or certain enabled interrupts.

8.2.1 Interrupt Recovery from Power-down

Two external interrupt sources may be configured to terminate Power-down mode: external interrupts $\overline{INT0}$ (P3.2) and $\overline{INT1}$ (P3.3). To wake up by external interrupt $\overline{INT0}$ or $\overline{INT1}$, that interrupt must be enabled by setting EX0 or EX1 in IE and must be configured for level-sensitive operation by clearing IT0 or IT1.

When terminating Power-down by an interrupt, two different wake-up modes are available. When PWDEX in PCON is one, the wake-up period is internally timed as shown in Figure 8-1. At the falling edge on the interrupt pin, Power-down is exited, the oscillator is restarted, and an internal timer begins counting. The internal clock will not be allowed to propagate to the CPU until after the timer has timed out. After the time-out period the interrupt service routine will begin. The time-out period is controlled by the Start-up Timer Fuses (see Table 7-1 on page 33). The interrupt pin need not remain low for the entire time-out period.

Figure 8-1. Interrupt Recovery from Power-down (PWDEX = 1)

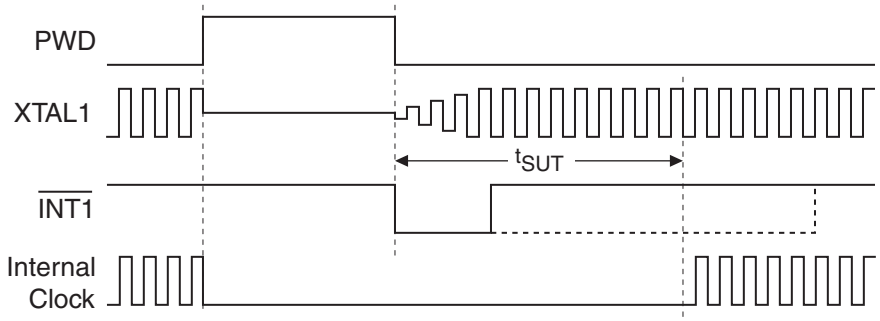

When PWDEX = “0”, the wake-up period is controlled externally by the interrupt. Again, at the falling edge on the interrupt pin, power-down is exited and the oscillator is restarted. However, the internal clock will not propagate until the rising edge of the interrupt pin as shown in Figure 8-2. The interrupt pin should be held low long enough for the selected clock source to stabilize. After the rising edge on the pin the interrupt service routine will be executed.

Figure 8-2. Interrupt Recovery from Power-down (PWDEX = 0)

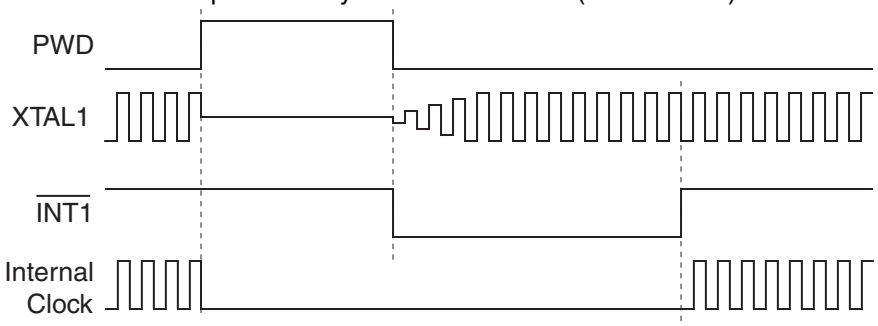

8.2.2 Reset Recovery from Power-down

The wake-up from Power-down through an external reset is similar to the interrupt with PWDEX = “1”. At the rising edge of RST, Power-down is exited, the oscillator is restarted, and an internal timer begins counting as shown in Figure 8-3. The internal clock will not be allowed to propagate to the CPU until after the timer has timed out. The time-out period is controlled by the Start-up Timer Fuses. (See Table 7-1 on page 33). If RST returns low before the time-out, a two clock cycle internal reset is generated when the internal clock restarts. Otherwise, the device will remain in reset until RST is brought low.

Figure 8-3. Reset Recovery from Power-down (POL = 1)

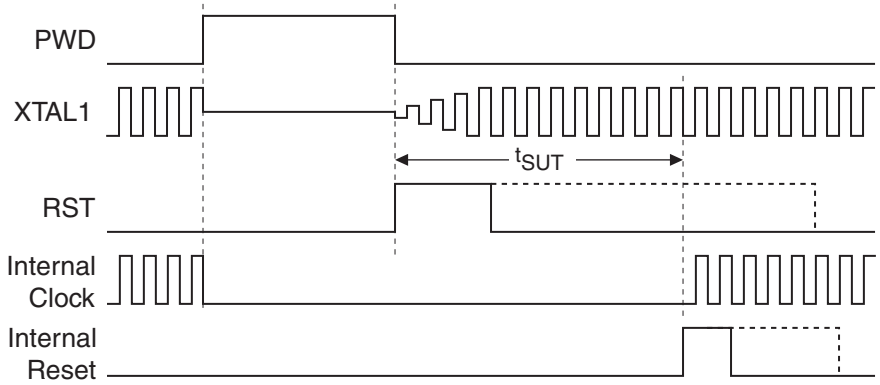

8.3 Reducing Power Consumption

Several possibilities need consideration when trying to reduce the power consumption in an 8051-based system. Generally, Idle or Power-down mode should be used as often as possible. All unneeded functions should be disabled. The System Clock Divider can scale down the operating frequency during periods of low demand. The ALE output can be disabled by setting DISALE in AUXR, thereby also reducing EMI.

9. Interrupts

The AT89LP51/52 provides 6 interrupt sources: two external interrupts, three timer interrupts, and a serial port interrupt. These interrupts and the system reset each have a separate program vector at the start of the program memory space. Each interrupt source can be individually enabled or disabled by setting or clearing a bit in the interrupt enable register IE. The IE register also contains a global disable bit, EA, which disables all interrupts.

Each interrupt source can be individually programmed to one of four priority levels by setting or clearing bits in the interrupt priority registers IP and IPH. IP holds the low order priority bits and IPH holds the high priority bits for each interrupt. An interrupt service routine in progress can be interrupted by a higher priority interrupt, but not by another interrupt of the same or lower priority. The highest priority interrupt cannot be interrupted by any other interrupt source. If two requests of different priority levels are pending at the end of an instruction, the request of higher priority level is serviced. If requests of the same priority level are pending at the end of an instruction, an internal polling sequence determines which request is serviced. The polling sequence is based on the vector address; an interrupt with a lower vector address has higher priority than an interrupt with a higher vector address. Note that the polling sequence is only used to resolve pending requests of the same priority level.

The External Interrupts $\overline{\text{INT0}}$ and $\overline{\text{INT1}}$ can each be either level-activated or edge-activated, depending on bits IT0 and IT1 in Register TCON. The flags that actually generate these interrupts are the IE0 and IE1 bits in TCON. When the service routine is vectored to, hardware clears the flag that generated an external interrupt only if the interrupt was edge-activated. If the interrupt was level activated, then the external requesting source (rather than the on-chip hardware) controls the request flag.

The Timer 0 and Timer 1 Interrupts are generated by TF0 and TF1, which are set by a rollover in their respective Timer/Counter registers (except for Timer 0 in Mode 3). When a timer interrupt is generated, the on-chip hardware clears the flag that generated it when the service routine is

vectored to. The Timer 2 Interrupt is generated by a logic OR of bits TF2 and EXF2 in register T2CON. Neither of these flags is cleared by hardware when the CPU vectors to the service routine. The service routine normally must determine whether TF2 or EXF2 generated the interrupt and that bit must be cleared by software.

The Serial Port Interrupt is generated by the logic OR of RI and TI in SCON. Neither of these flags is cleared by hardware when the CPU vectors to the service routine. The service routine normally must determine whether RI or TI generated the interrupt and that bit must be cleared by software.

All of the bits that generate interrupts can be set or cleared by software, with the same result as though they had been set or cleared by hardware. That is, interrupts can be generated and pending interrupts can be canceled in software.

Table 9-1. Interrupt Vector Addresses

Interrupt	Source	Vector Address
System Reset	RST or POR or BOD	0000H
External Interrupt 0	IE0	0003H
Timer 0 Overflow	TF0	000BH
External Interrupt 1	IE1	0013H
Timer 1 Overflow	TF1	001BH
Serial Port Interrupt	RI or TI	0023H
Timer 2 Interrupt	TF2 or EXF2	002BH

9.1 Interrupt Response Time

The interrupt flags may be set by their hardware in any clock cycle. The interrupt controller polls the flags in the last clock cycle of the instruction in progress. If one of the flags was set in the preceding cycle, the polling cycle will find it and the interrupt system will generate an LCALL to the appropriate service routine as the next instruction, provided that the interrupt is not blocked by any of the following conditions: an interrupt of equal or higher priority level is already in progress; the instruction in progress is RETI or any write to the IE, IP or IPH registers; the CPU is currently forced into idle by an IAP or FDATA write. Each of these conditions will block the generation of the LCALL to the interrupt service routine. The second condition ensures that if the instruction in progress is RETI or any access to IE, IP or IPH, then at least one more instruction will be executed before any interrupt is vectored to. The polling cycle is repeated at the last cycle of each instruction, and the values polled are the values that were present at the previous clock cycle. If an active interrupt flag is not being serviced because of one of the above conditions and is no longer active when the blocking condition is removed, the denied interrupt will not be serviced. In other words, the fact that the interrupt flag was once active but not serviced is not remembered. Every polling cycle is new.

If a request is active and conditions are met for it to be acknowledged, a hardware subroutine call to the requested service routine will be the next instruction executed. The call itself takes four cycles. Thus, a minimum of five complete clock cycles elapsed between activation of an interrupt request and the beginning of execution of the first instruction of the service routine. A longer response time results if the request is blocked by one of the previously listed conditions. If an interrupt of equal or higher priority level is already in progress, the additional wait time depends on the nature of the other interrupt's service routine. If the instruction in progress is not in its final clock cycle, the additional wait time cannot be more than 4 cycles, since the longest

instruction is 5 cycles long. If the instruction in progress is RETI, the additional wait time cannot be more than 9 cycles (a maximum of 4 more cycles to complete the instruction in progress, plus a maximum of 5 cycles to complete the next instruction). Thus, in a single-interrupt system, the response time is always more than 5 clock cycles and less than 14 clock cycles. See Figure 9-1 and Figure 9-2.

Figure 9-1. Minimum Interrupt Response Time (Fast Mode)

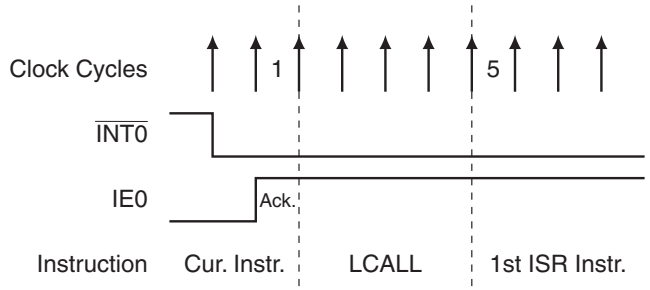

Figure 9-2. Maximum Interrupt Response Time (Fast Mode)

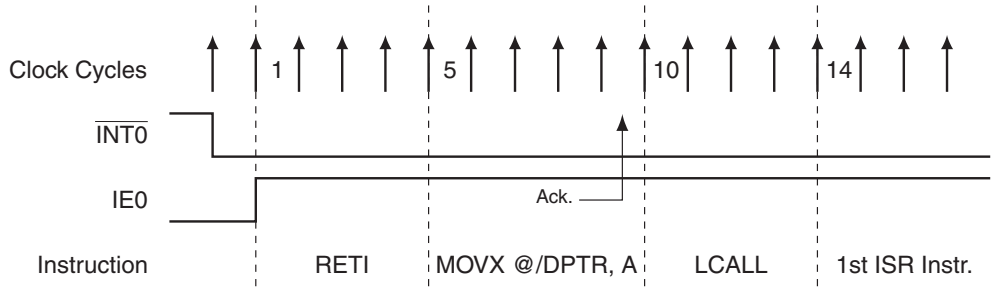

Figure 9-3. Minimum Interrupt Response Time (Compatibility Mode)

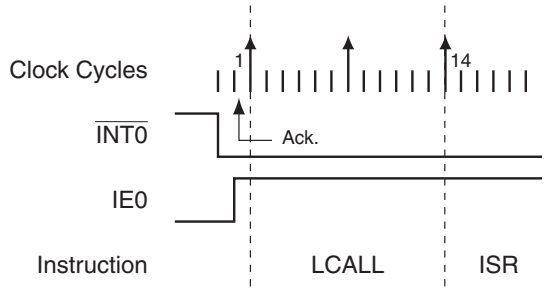

Figure 9-4. Maximum Interrupt Response Time (Compatibility Mode)

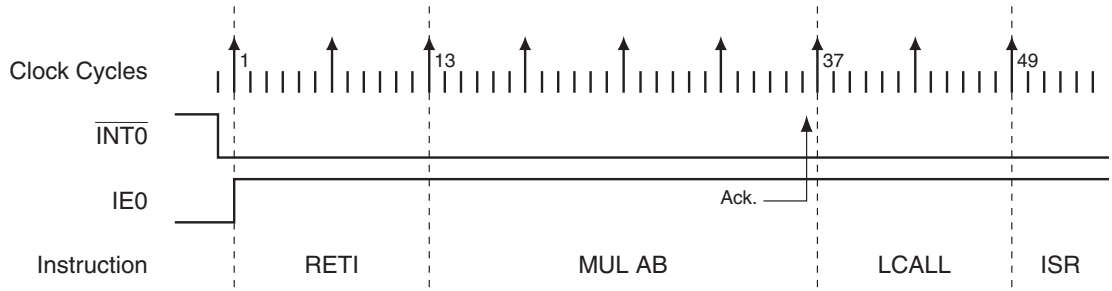

Table 9-2. IE – Interrupt Enable Register

IE = A8H Reset Value = 0000 0000B

Bit Addressable

	EA	–	ET2	ES	ET1	EX1	ET0	EX0
Bit	7	6	5	4	3	2	1	0

Symbol	Function
EA	Global enable/disable. All interrupts are disabled when EA = 0. When EA = 1, each interrupt source is enabled/disabled by setting /clearing its own enable bit.
ET2	Timer 2 Interrupt Enable
ES	Serial Port Interrupt Enable
ET1	Timer 1 Interrupt Enable
EX1	External Interrupt 1 Enable
ET0	Timer 0 Interrupt Enable
EX0	External Interrupt 0 Enable

Table 9-3. IP – Interrupt Priority Register

IP = B8H Reset Value = 0000 0000B

Bit Addressable

	–	–	PT2	PS	PT1	PX1	PT0	PX0
Bit	7	6	5	4	3	2	1	0

Symbol	Function
PT2	Timer 2 Interrupt Priority Low
PS	Serial Port Interrupt Priority Low
PT1	Timer 1 Interrupt Priority Low
PX1	External Interrupt 1 Priority Low
PT0	Timer 0 Interrupt Priority Low
PX0	External Interrupt 0 Priority Low

Table 9-4. IPH – Interrupt Priority High Register

IPH = B7H Reset Value = 0000 0000B

Not Bit Addressable

	–	–	PT2H	PSH	PT1H	PX1H	PT0H	PX0H
Bit	7	6	5	4	3	2	1	0

Symbol	Function
PT2H	Timer 2 Interrupt Priority High
PSH	Serial Port Interrupt Priority High
PT1H	Timer 1 Interrupt Priority High
PX1H	External Interrupt 1 Priority High
PT0H	Timer 0 Interrupt Priority High
PX0H	External Interrupt 0 Priority High

10. I/O Ports

The AT89LP51/52 can be configured for between 32 and 36 I/O pins. The exact number of I/O pins available depends on the clock, external memory and package type as shown in Table 10-1.

Table 10-1. I/O Pin Configurations

Clock Source	External Program Access	External Data Access	Number of I/O Pins
External Crystal or Resonator	Yes (PSEN+ALE+P0+P2)	Yes (RD+WR)	14
		No	16
	No	Yes (ALE+RD+WR+P0)	31
		No	34
External Clock	Yes (PSEN+ALE+P0+P2)	Yes (RD+WR)	15
		No	17
	No	Yes (ALE+RD+WR+P0)	32
		No	35
Internal RC Oscillator	Yes (PSEN+ALE+P0+P2)	Yes (RD+WR)	16
		No	18
	No	Yes (ALE+RD+WR+P0)	33
		No	36

10.1 Port Configuration

Each 8-bit port on the AT89LP51/52 may be configured in one of four modes: quasi-bidirectional (standard 8051 port outputs), push-pull output, open-drain output, or input-only. Port modes may be assigned in software on a port-by-port basis as shown in Table 10-2 using the PMOD register listed in Table 10-3. The Tristate-Port User Fuse determines the default state of the port pins (See "User Configuration Fuses" on page 86). When the fuse is enabled, all port pins default to input-only mode after reset. When the fuse is disabled, all port pins on P1, P2 and P3 default to quasi-bidirectional mode after reset and are weakly pulled high. P0 is set to Open-drain mode. P4 always operates in quasi-bidirectional mode.

Each port pin also has a Schmitt-triggered input for improved input noise rejection. During Power-down all the Schmitt-triggered inputs are disabled with the exception of P3.2 ($\overline{INT0}$), P3.3 ($\overline{INT1}$), RST, P4.6 (XTAL1) and P4.7 (XTAL2). Therefore, P3.2, P3.3, P4.6 and P4.7 should not be left floating during Power-down.

Table 10-2. Configuration Modes for Port x

PxM0	PxM1	Port Mode
0	0	Quasi-bidirectional
0	1	Push-pull Output
1	0	Input Only (High Impedance)
1	1	Open-Drain Output

Table 10-3. PMOD – Port Mode Register

PMOD = C1H — Reset Value = 0000 0011B

Not Bit Addressable

	P3M1	P3M0	P2M1	P2M0	P1M1	P1M0	P0M1	P0M0
Bit	7	6	5	4	3	2	1	0

Symbol	Function
$P3M_{1-0}$	Port 3 Configuration Mode
$P2M_{1-0}$	Port 2 Configuration Mode
$P1M_{1-0}$	Port 1 Configuration Mode
$P0M_{1-0}$	Port 0 Configuration Mode

10.1.1 Quasi-bidirectional Output

Port pins in quasi-bidirectional output mode function similar to standard 8051 port pins. A Quasi-bidirectional port can be used both as an input and output without the need to reconfigure the port. This is possible because when the port outputs a logic high, it is weakly driven, allowing an external device to pull the pin low. When the pin is driven low, it is driven strongly and able to sink a large current. There are three pull-up transistors in the quasi-bidirectional output that serve different purposes.

One of these pull-ups, called the “very weak” pull-up, is turned on whenever the port latch for the pin contains a logic “1”. This very weak pull-up sources a very small current that will pull the pin high if it is left floating. When the pin is pulled low externally this pull-up will always source some current.

A second pull-up, called the “weak” pull-up, is turned on when the port latch for the pin contains a logic “1” and the pin itself is also at a logic “1” level. This pull-up provides the primary source current for a quasi-bidirectional pin that is outputting a “1”. If this pin is pulled low by an external device, this weak pull-up turns off, and only the very weak pull-up remains on. In order to pull the pin low under these conditions, the external device has to sink enough current to overpower the weak pull-up and pull the port pin below its input threshold voltage.

The third pull-up is referred to as the “strong” pull-up. This pull-up is used to speed up low-to-high transitions on a quasi-bidirectional port pin when the port latch changes from a logic “0” to a logic “1”. When this occurs, the strong pull-up turns on for one CPU clock, quickly pulling the port pin high. The quasi-bidirectional port configuration is shown in Figure 10-1.

10.1.2 Input-only Mode

The input only port configuration is shown in Figure 10-2. The output drivers are tristated. The input includes a Schmitt-triggered input for improved input noise rejection. The input circuitry of P3.2, P3.3, P4.6 and P4.7 is not disabled during Power-down (see Figure 10-3) and therefore these pins should not be left floating during Power-down when configured in this mode.

Input-only mode can reduce power consumption for low-level inputs over quasi-bidirectional mode because the “very weak” pull-up is turned off and only very small leakage current in the sub microamp range is present.

Figure 10-1. Quasi-bidirectional Output

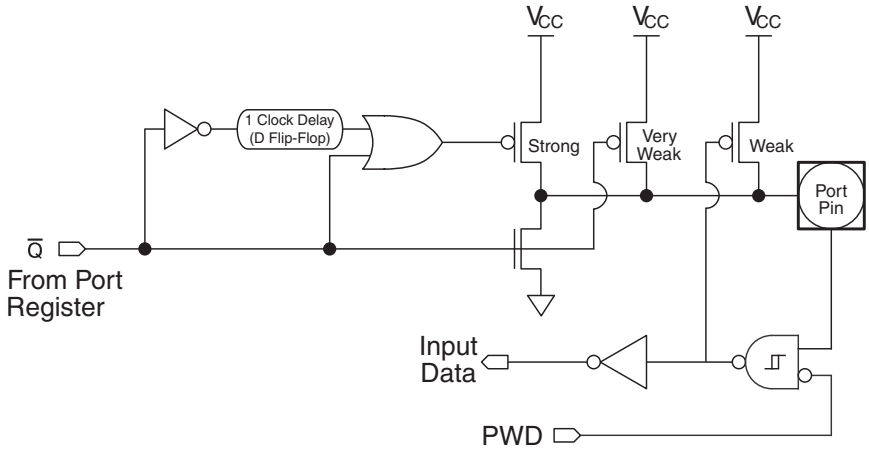

Figure 10-2. Input Only

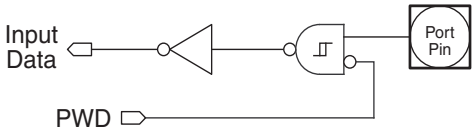

Figure 10-3. Input Circuit for P3.2, P3.3, P4.6 and P4.7

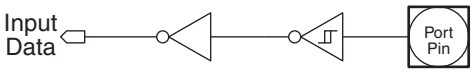

10.1.3 Open-drain Output

The open-drain output configuration turns off all pull-ups and only drives the pull-down transistor of the port pin when the port latch contains a logic “0”. To be used as a logic output, a port configured in this manner must have an external pull-up, typically a resistor tied to V_{DD}. The pull-down for this mode is the same as for the quasi-bidirectional mode. The open-drain port configuration is shown in Figure 10-4. The input circuitry of P3.2, P3.3, P4.6 and P4.7 is not disabled during Power-down (see Figure 10-3) and therefore these pins should not be left floating during Power-down when configured in this mode.

Figure 10-4. Open-Drain Output

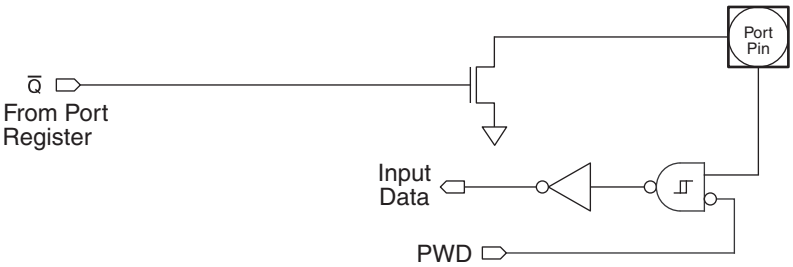

10.1.4 Push-pull Output

The push-pull output configuration has the same pull-down structure as both the open-drain and the quasi-bidirectional output modes, but provides a continuous strong pull-up when the port latch contains a logic “1”. The push-pull mode may be used when more source current is needed from a port output. The push-pull port configuration is shown in Figure 10-5.

Figure 10-5. Push-pull Output

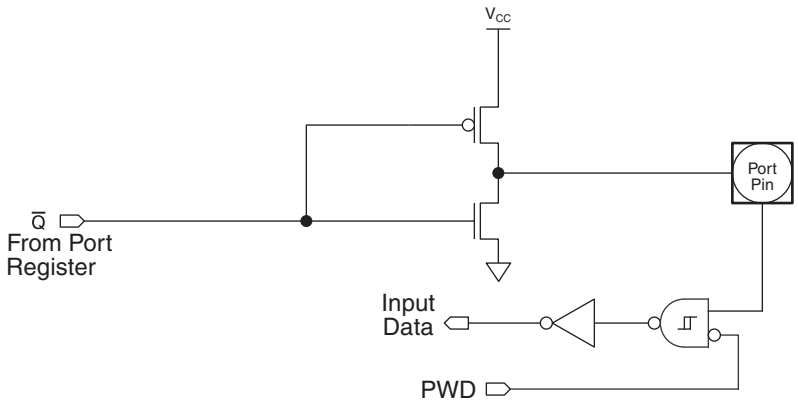

10.2 Port Read-Modify-Write

A read from a port will read either the state of the pins or the state of the port register depending on which instruction is used. Simple read instructions will always access the port pins directly. Read-modify-write instructions, which read a value, possibly modify it, and then write it back, will always access the port register. This includes bit write instructions such as CLR or SETB as they actually read the entire port, modify a single bit, then write the data back to the entire port. See Table 10-4 for a complete list of Read-Modify-Write instruction which may access the ports.

Table 10-4. Port Read-Modify-Write Instructions

Mnemonic	Instruction	Example
ANL	Logical AND	ANL P1, A
ORL	Logical OR	ORL P1, A
XRL	Logical EX-OR	XRL P1, A
JBC	Jump if bit set and clear bit	JBC P3.0, LABEL
CPL	Complement bit	CPL P3.1
INC	Increment	INC P1
DEC	Decrement	DEC P3
DJNZ	Decrement and jump if not zero	DJNZ P3, LABEL
MOV PX.Y, C	Move carry to bit Y of Port X	MOV P1.0, C
CLR PX.Y	Clear bit Y of Port X	CLR P1.1
SETB PX.Y	Set bit Y of Port X	SETB P3.2

10.3 Port Alternate Functions

Most general-purpose digital I/O pins of the AT89LP51/52 share functionality with the various I/Os needed for the peripheral units. Table 10-6 lists the alternate functions of the port pins. Alternate functions are connected to the pins in a logic AND fashion. In order to enable the alternate function on a port pin, that pin must have a “1” in its corresponding port register bit, otherwise the input/output will always be “0”. However, alternate functions may be temporarily forced to “0” by clearing the associated port bit, provided that the pin is not in input-only mode. Furthermore, each pin must be configured for the correct input/output mode as required by its peripheral before it may be used as such. Table 10-5 shows how to configure a generic pin for use with an alternate function. If two or more port pins on the same 8-bit require difference directions, the port must be configured for bidirectional operation.

Table 10-5. Pin Function Configurations for Port x Pin y

PxM0	PxM1	Px.y	I/O Mode
0	0	1	bidirectional (internal pull-up)
0	1	1	output
1	0	X	input
1	1	1	bidirectional (external pull-up)

Table 10-6. Port Pin Alternate Functions

Port Pin	Configuration Bits		Alternate Function	Notes
	PxM0	PxM1		
P0.0–P0.7	N/A		AD0–AD7	Address and data on Port 0 are automatically configured as output or input regardless of P0M0 and P0M1.
P1.0	P1M0	P1M1	T2	T2 Clock out toggles P1.0 directly
P1.1	P1M0	P1M1	T2EX	
P1.5	P1M0	P1M1	MOSI	
P1.6	P1M0	P1M1	MISO	
P1.7	P1M0	P1M1	SCK	
P2.0–P2.7	N/A		A8–A15	Address on Port 2 is automatically configured as output regardless of P2M0 and P2M1.
P3.0	P3M0	P3M1	RXD	
P3.1	P3M0	P3M1	TXD	
P3.2	P3M0	P3M1	$\overline{\text{INT0}}$	
P3.3	P3M0	P3M1	$\overline{\text{INT1}}$	
P3.4	P3M0	P3M1	T0	T0 Clock out toggles P3.4 directly
P3.5	P3M0	P3M1	T1	T1 Clock out toggles P3.5 directly
P3.6	P3M0	P3M1	$\overline{\text{WR}}$	
P3.7	P3M0	P3M1	$\overline{\text{RD}}$	

11. Timer 0 and Timer 1

The AT89LP51/52 has two 16-bit Timer/Counters, Timer 0 and Timer 1, with the following features:

- Two independent 16-bit timer/counters with 8-bit reload registers
- UART baud rate generation using Timer 1
- Output pin toggle on timer overflow
- Split timer mode allows for three separate timers (2 8-bit, 1 16-bit)
- Gated modes allow timers to run/halt based on an external input

Timer 0 and Timer 1 have similar modes of operation. As timers, the timer registers normally increase every clock cycle. Thus, the registers count clock cycles. The timer rate can be prescaled by a value between 1 and 16 using the Timer Prescaler (see Table 6-2 on page 31). Both Timers share the same prescaler. In Compatibility mode CDV defaults to 2, so a clock cycle consists of two oscillator periods,and the prescaler defaults to 6 making the count rate equal to 1/12 of the oscillator frequency. By default in Fast mode CDV = 0 and TPS = 0 so the count rate is equal to the oscillator frequency.

As counters, the timer registers are incremented in response to a 1-to-0 transition at the corresponding input pins, T0 or T1. In Fast mode the external input is sampled every clock cycle. When the samples show a high in one cycle and a low in the next cycle, the count is incremented. The new count value appears in the register during the cycle following the one in which the transition was detected. Since 2 clock cycles are required to recognize a 1-to-0 transition, the maximum count rate is 1/2 of the system frequency. There are no restrictions on the duty cycle of the input signal, but it should be held for at least one full clock cycle to ensure that a given level is sampled at least once before it changes.

In Compatibility mode the counter input sampling is controlled by the prescaler. Since TPS defaults to 6 in this mode, the pins are sampled every six system clocks. Therefore the input signal should be held for at least six clock cycles to ensure that a given level is sampled at least once before it changes.

Furthermore, the Timer or Counter functions for Timer 0 and Timer 1 have four operating modes: 13-bit timer, 16-bit timer, 8-bit auto-reload timer, and split timer. The control bits C/T in the Special Function Register TMOD select the Timer or Counter function. The bit pairs (M1, M0) in TMOD select the operating modes.

Table 11-1. Timer 0/1 Register Summary

Name	Address	Purpose	Bit-Addressable
TCON	88H	Control	Y
TMOD	89H	Mode	N
TL0	8AH	Timer 0 low-byte	N
TL1	8BH	Timer 1 low-byte	N
TH0	8CH	Timer 0 high-byte	N
TH1	8DH	Timer 1 high-byte	N
TCONB	91H	Mode	N

11.1 Mode 0 – 13-bit Timer/Counter

Both Timers in Mode 0 are 8-bit Counters with a divide-by-32 prescaler. Figure 11-1 shows the Mode 0 operation as it applies to Timer 1. As the count rolls over from all "1"s to all "0"s, it sets the Timer interrupt flag TF1. The counter input is enabled to the Timer when TR1 = 1 and either GATE1 = 0 or $\overline{INT1}$ = 1. Setting GATE1 = 1 allows the Timer to be controlled by external input $\overline{INT1}$, to facilitate pulse width measurements. TR1 is a control bit in the Special Function Register TCON. GATE1 is in TMOD. The 13-bit register consists of all 8 bits of TH1 and the lower 5 bits of TL1. The upper 3 bits of TL1 are indeterminate and should be ignored. Setting the run flag (TR1) does not clear the registers.

$$\text{Mode 0:} \qquad \text{Time-out Period} = \frac{8192}{\text{System Frequency}} \times (\text{TPS} + 1)$$

Figure 11-1. Timer/Counter 1 Mode 0: 13-bit Counter

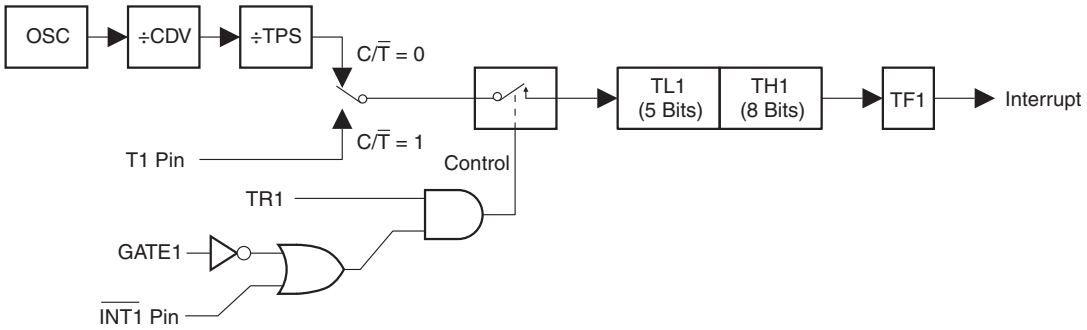

Mode 0 operation is the same for Timer 0 as for Timer 1, except that TR0, TF0, GATE0 and $\overline{INT0}$ replace the corresponding Timer 1 signals in Figure 11-1. There are two different C/T bits, one for Timer 1 (TMOD.6) and one for Timer 0 (TMOD.2).

11.2 Mode 1 – 16-bit Timer/Counter

In Mode 1 the Timers are configured for 16-bit operation. The Timer register is run with all 16 bits and the clock is applied to the combined high and low timer registers (TH1/TL1). As clock pulses are received, the timer counts up: 0000H, 0001H, 0002H, etc. An overflow occurs on the FFFFH-to-0000H transition, upon which the overflow flag bit in TCON is set. See Figure 11-2. Mode 1 operation is the same for Timer/Counter 0.

$$\text{Mode 1:} \qquad \text{Time-out Period} = \frac{65536}{\text{System Frequency}} \times (\text{TPS} + 1)$$

Figure 11-2. Timer/Counter 1 Mode 1: 16-bit Counter

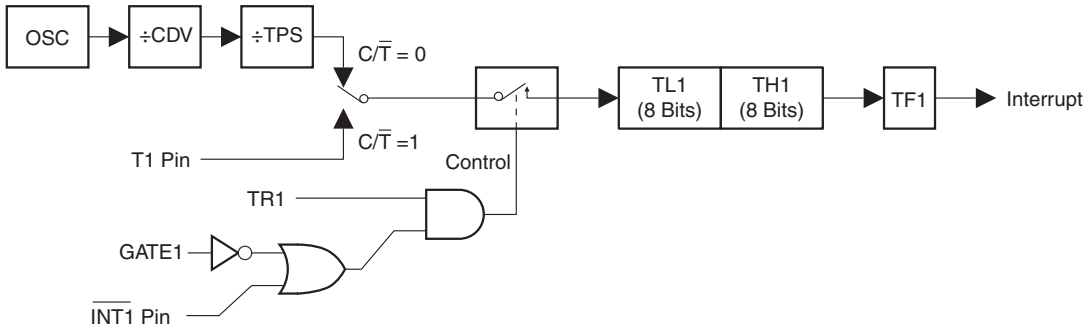

11.3 Mode 2 – 8-bit Auto-Reload Timer/Counter

Mode 2 configures the Timer register as an 8-bit Counter (TL1) with automatic reload, as shown in Figure 11-3. Overflow from TL1 not only sets TF1, but also reloads TL1 with the contents of TH1, which is preset by software. The reload leaves TH1 unchanged. Mode 2 operation is the same for Timer/Counter 0.

$$\text{Mode 2:} \qquad \text{Time-out Period} = \frac{(256 - \text{TH0})}{\text{System Frequency}} \times (\text{TPS} + 1)$$

Figure 11-3. Timer/Counter 1 Mode 2: 8-bit Auto-Reload

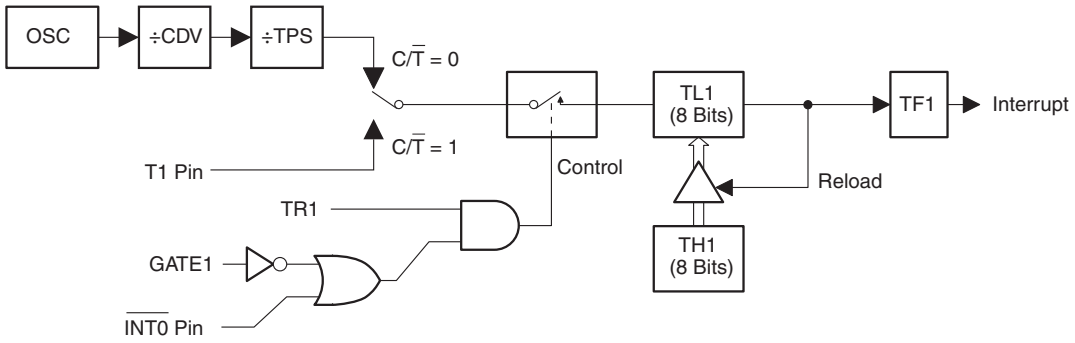

11.4 Mode 3 – 8-bit Split Timer

Timer 1 in Mode 3 simply holds its count. The effect is the same as setting TR1 = 0. Timer 0 in Mode 3 establishes TL0 and TH0 as two separate counters. The logic for Mode 3 on Timer 0 is shown in Figure 11-4. TL0 uses the Timer 0 control bits: C/T, GATE0, TR0, $\overline{\text{INT0}}$, and TF0. TH0 is locked into a timer function (counting clock cycles) and takes over the use of TR1 and TF1 from Timer 1. Thus, TH0 now controls the Timer 1 interrupt. While Timer 0 is in Mode 3, Timer 1 will still obey its settings in TMOD but cannot generate an interrupt.

Mode 3 is for applications requiring an extra 8-bit timer or counter. With Timer 0 in Mode 3, the AT89LP51/52 can appear to have four Timer/Counters. When Timer 0 is in Mode 3, Timer 1 can be turned on and off by switching it out of and into its own Mode 3. In this case, Timer 1 can still be used by the serial port as a baud rate generator or in any application not requiring an interrupt.

Figure 11-4. Timer/Counter 0 Mode 3: Two 8-bit Counters

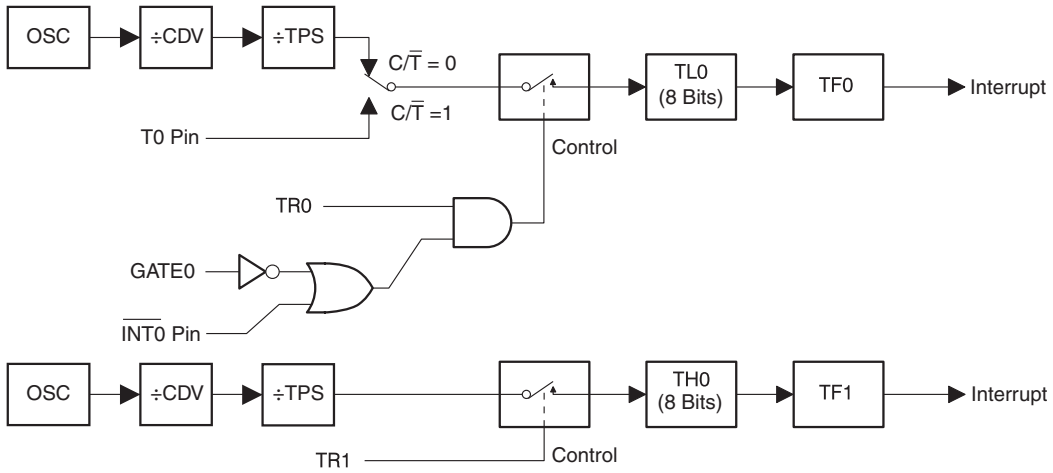

Table 11-2. TCON – Timer/Counter Control Register

TCON = 88H — Reset Value = 0000 0000B

Bit Addressable

	TF1	TR1	TF0	TR0	IE1	IT1	IE0	IT0
Bit	7	6	5	4	3	2	1	0

Symbol	Function
TF1	Timer 1 overflow flag. Set by hardware on Timer/Counter overflow. Cleared by hardware when the processor vectors to interrupt routine.
TR1	Timer 1 run control bit. Set/cleared by software to turn Timer/Counter on/off.
TF0	Timer 0 overflow flag. Set by hardware on Timer/Counter overflow. Cleared by hardware when the processor vectors to interrupt routine.
TR0	Timer 0 run control bit. Set/cleared by software to turn Timer/Counter on/off.
IE1	Interrupt 1 edge flag. Set by hardware when external interrupt edge detected. Cleared when interrupt processed.
IT1	Interrupt 1 type control bit. Set/cleared by software to specify falling edge/low level triggered external interrupts.
IE0	Interrupt 0 edge flag. Set by hardware when external interrupt edge detected. Cleared when interrupt processed.
IT0	Interrupt 0 type control bit. Set/cleared by software to specify falling edge/low level triggered external interrupts.

Table 11-3. TCONB – Timer/Counter Control Register B

TCONB = 91H — Reset Value = 0000 0000B

Not Bit Addressable

	T1OE	T0OE	SPEN	–	–	–	–	–
Bit	7	6	5	4	3	2	1	0

Symbol	Function
T1OE	Timer 1 Output Enable. Configures Timer 1 to toggle T1 (P3.5) upon overflow.
T0OE	Timer 0 Output Enable. Configures Timer 0 to toggle T0 (P3.4) upon overflow.
SPEN	Enables SPI mode for UART mode 0

11.5 Clock Output (Pin Toggle Mode)

On the AT89LP51/52, Timer 0 and Timer 1 may be independently configured to toggle their respective counter pins, T0 and T1, on overflow by setting the T0OE or T1OE bits in TCONB. The C/$\overline{\text{Tx}}$ bits must be set to “0” when in toggle mode and the T0 (P3.4) and T1 (P3.5) pins must be configured in an output mode. The Timer Overflow Flags and Interrupts will continue to function while in toggle mode and Timer 1 may still generate the baud rate for the UART. The timer GATE function also works in toggle mode, allowing the output to be halted by an external input.

Toggle mode can be used with Timer Mode 2 to output a 50% duty cycle clock with 8-bit programmable frequency. T*x* is toggled at every Timer *x* overflow with the pulse width determined by the value of THx. An example waveform is given in Figure 11-5. The following formula gives the output frequency for Timer 0 in Mode 2.

$$\text{Mode 2:} \qquad f_{out} = \frac{\text{System Frequency}}{2 \times (256 - \text{TH0})} \times \frac{1}{\text{TPS} + 1}$$

Figure 11-5. Timer 0/1 Toggle Mode 2 Waveform

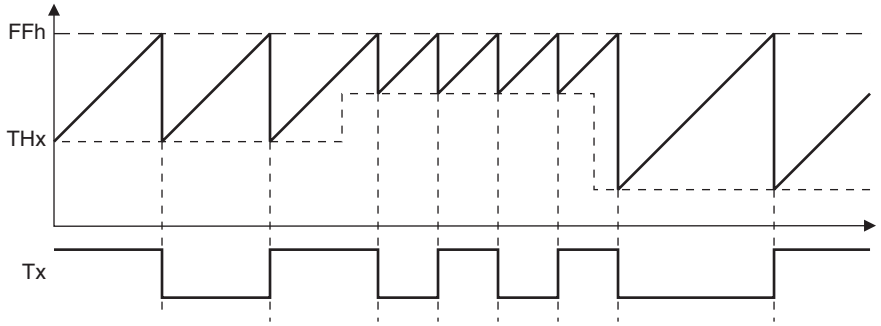

Table 11-4. TMOD – Timer/Counter Mode Control Register

TMOD Address = 089H — Reset Value = 0000 0000B

Not Bit Addressable

	GATE1	C/$\overline{T1}$	T1M1	T1M0	GATE0	C/$\overline{T0}$	T0M0	T0M1
Bit	7	6	5	4	3	2	1	0

Symbol	Function
GATE1	Timer 1 Gating Control. When set, Timer/Counter 1 is enabled only while $\overline{INT1}$ pin is high and TR1 control pin is set. When cleared, Timer 1 is enabled whenever TR1 control bit is set.
C/$\overline{T1}$	Timer or Counter Selector 1. Cleared for Timer operation (input from internal system clock). Set for Counter operation (input from T1 input pin). C/$\overline{T1}$ must be zero when using Timer 1 in Clock Out mode.
T1M1 T1M0	Timer 1 Operating Mode **Mode** / **T1M1** / **T1M0** / **Operation** 0 / 0 / 0 / 13-bit Timer Mode. 8-bit Timer/Counter TH1 with TL1 as 5-bit prescaler. 1 / 0 / 1 / 16-bit Timer Mode. TH1 and TL1 are cascaded to form a 16-bit Timer/Counter. 2 / 1 / 0 / 8-bit Auto Reload Mode. TH1 holds a value which is reloaded into 8-bit Timer/Counter TL1 each time it overflows. 3 / 1 / 1 / Timer/Counter 1 is stopped
GATE0	Timer 0 Gating Control. When set, Timer/Counter 0 is enabled only while $\overline{INT0}$ pin is high and TR0 control pin is set. When cleared, Timer 0 is enabled whenever TR0 control bit is set.
C/$\overline{T0}$	Timer or Counter Selector 0. Cleared for Timer operation (input from internal system clock). Set for Counter operation (input from T0 input pin). C/$\overline{T0}$ must be zero when using Timer 0 in Clock Out mode.
T0M1 T0M0	Timer 0 Operating Mode **Mode** / **T0M1** / **T0M0** / **Operation** 0 / 0 / 0 / 13-bit Timer Mode. 8-bit Timer/Counter TH0 with TL0 as 5-bit prescaler. 1 / 0 / 1 / 16-bit Timer Mode. TH0 and TL0 are cascaded to form a 16-bit Timer/Counter. 2 / 1 / 0 / 8-bit Auto Reload Mode. TH0 holds a value which is reloaded into 8-bit Timer/Counter TL0 each time it overflows. 3 / 1 / 1 / Split Timer Mode. TL0 is an 8-bit Timer/Counter controlled by the standard Timer 0 control bits. TH0 is an 8-bit timer only controlled by Timer 1 control bits.

12. Timer 2

The AT89LP51/52 includes a 16-bit Timer/Counter 2 with the following features:

- 16-bit timer/counter with one 16-bit reload/capture register
- One external reload/capture input
- Up/Down counting mode with external direction control
- UART baud rate generation
- Output-pin toggle on timer overflow
- Dual slope symmetric operating modes
- Timer 2 is included in AT89LP51, unlike AT89S51.

Timer 2 is a 16-bit Timer/Counter that can operate as either a timer or an event counter. The type of operation is selected by bit C/$\overline{T2}$ in the SFR T2CON. Timer 2 has three operating modes: capture, auto-reload (up or down counting), and baud rate generator. The modes are selected by bits in T2CON and T2MOD, as shown in Table 12-3. Timer 2 also serves as the time base for the Compare/Capture Array (See Section 13. “External Interrupts” on page 57).

Timer 2 consists of two 8-bit registers, TH2 and TL2. In the Timer function, the register is incremented every clock cycle. Since a clock cycle consists of one oscillator period, the count rate is equal to the oscillator frequency. The timer rate can be prescaled by a value between 1 and 16 using the Timer Prescaler (see Table 6-2 on page 31).

In the Counter function, the register is incremented in response to a 1-to-0 transition at its corresponding external input pin, T2. In this function, the external input is sampled every clock cycle. When the samples show a high in one cycle and a low in the next cycle, the count is incremented. The new count value appears in the register during the cycle following the one in which the transition was detected. Since two clock cycles are required to recognize a 1-to-0 transition, the maximum count rate is 1/2 of the oscillator frequency. To ensure that a given level is sampled at least once before it changes, the level should be held for at least one full clock cycle.

Table 12-1. Timer 2 Operating Modes

RCLK + TCLK	CP/$\overline{RL2}$	DCEN	T2OE	TR2	MODE
0	0	0	0	1	16-bit Auto-reload
0	0	1	0	1	16-bit Auto-reload Up-Down
0	1	X	0	1	16-bit Capture
1	X	X	X	1	Baud Rate Generator
X	X	X	1	1	Frequency Generator
X	X	X	X	0	(Off)

The following definitions for Timer 2 are used in the subsequent paragraphs:

Table 12-2. Timer 2 Definitions

Symbol	Definition
MIN	0000H
MAX	FFFFH
BOTTOM	16-bit value of {RCAP2H,RCAP2L}

12.1 Timer 2 Registers

Control and status bits for Timer 2 are contained in registers T2CON (see Table 12-3) and T2MOD (see Table 12-4). The register pair {TH2, TL2} at addresses 0CDH and 0CCH are the 16-bit timer register for Timer 2. The register pair {RCAP2H, RCAP2L} at addresses 0CBH and 0CAH are the 16-bit Capture/Reload register for Timer 2 in capture and auto-reload modes.

Table 12-3. T2CON – Timer/Counter 2 Control Register

T2CON Address = 0C8H — Reset Value = 0000 0000B

Bit Addressable

	TF2	EXF2	RCLK	TCLK	EXEN2	TR2	C/$\overline{T2}$	CP/$\overline{RL2}$
Bit	7	6	5	4	3	2	1	0

Symbol	Function
TF2	Timer 2 overflow flag set by a Timer 2 overflow and must be cleared by software. TF2 will not be set when either RCLK = 1 or TCLK = 1.
EXF2	Timer 2 external flag set when either a capture or reload is caused by a negative transition on T2EX and EXEN2 = 1. When Timer 2 interrupt is enabled, EXF2 = 1 will cause the CPU to vector to the Timer 2 interrupt routine. EXF2 must be cleared by software. EXF2 does not cause an interrupt in up/down counter mode (DCEN = 1) or dual-slope mode.
RCLK	Receive clock enable. When set, causes the serial port to use Timer 2 overflow pulses for its receive clock in serial port Modes 1 and 3. RCLK = 0 causes Timer 1 overflows to be used for the receive clock.
TCLK	Transmit clock enable. When set, causes the serial port to use Timer 2 overflow pulses for its transmit clock in serial port Modes 1 and 3. TCLK = 0 causes Timer 1 overflows to be used for the transmit clock.
EXEN2	Timer 2 external enable. When set, allows a capture or reload to occur as a result of a negative transition on T2EX if Timer 2 is not being used to clock the serial port. EXEN2 = 0 causes Timer 2 to ignore events at T2EX.
TR2	Start/Stop control for Timer 2. TR2 = 1 starts the timer.
C/$\overline{T2}$	Timer or counter select for Timer 2. C/$\overline{T2}$ = 0 for timer function. C/$\overline{T2}$ = 1 for external event counter (falling edge triggered).
CP/$\overline{RL2}$	Capture/Reload select. CP/$\overline{RL2}$ = 1 causes captures to occur on negative transitions at T2EX if EXEN2 = 1. CP/$\overline{RL2}$ = 0 causes automatic reloads to occur when Timer 2 overflows or negative transitions occur at T2EX when EXEN2 = 1. When either RCLK or TCLK = 1, this bit is ignored and the timer is forced to auto-reload on Timer 2 overflow.

Table 12-4. T2MOD – Timer 2 Mode Control Register

T2MOD Address = 0C9H — Reset Value = 0000 0000B

Not Bit Addressable

	–	–	–	–	–	–	T2OE	DCEN
Bit	7	6	5	4	3	2	1	0

Symbol	Function
T2OE	Timer 2 Output Enable. When T2OE = 1 and C/$\overline{T2}$ = 0, the T2 pin will toggle after every Timer 2 overflow.
DCEN	Timer 2 Down Count Enable. When Timer 2 operates in Auto-Reload mode and EXEN2 = 1, setting DCEN = 1 will cause Timer 2 to count up or down depending on the state of T2EX.

12.2 Capture Mode

In the Capture mode, Timer 2 is a fixed 16-bit timer or counter that counts up from MIN to MAX. An overflow from MAX to MIN sets bit TF2 in T2CON. If EXEN2 = 1, a 1-to-0 transition at external input T2EX also causes the current value in TH2 and TL2 to be captured into RCAP2H and RCAP2L, respectively. In addition, the transition at T2EX causes bit EXF2 in T2CON to be set. The EXF2 and TF2 bits can generate an interrupt. Capture mode is illustrated in Figure 12-1. The Timer 2 overflow rate in Capture mode is given by the following equation:

$$\text{Capture Mode:} \qquad \text{Time-out Period} = \frac{65536}{\text{System Frequency}} \times (\text{TPS} + 1)$$

Figure 12-1. Timer 2 Diagram: Capture Mode

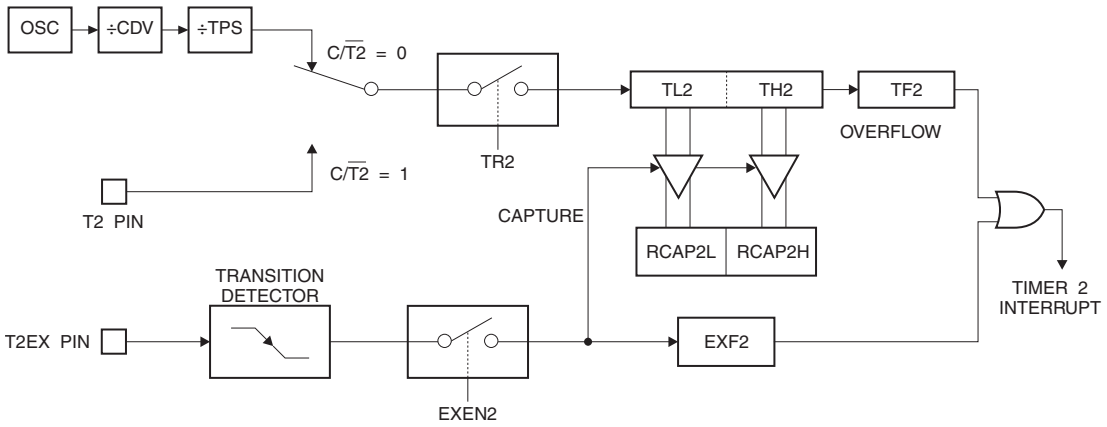

12.3 Auto-Reload Mode

Timer 2 can be programmed to count up or down when configured in its 16-bit auto-reload mode. This feature is invoked by the DCEN (Down Counter Enable) bit located in the SFR T2MOD (see Table 12-4). Upon reset, the DCEN bit is set to 0 so that timer 2 will default to count up. When DCEN is set, Timer 2 can count up or down, depending on the value of the T2EX pin. A summary of the Auto-Reload behaviors is listed in Table 12-5.

Table 12-5. Summary of Auto-Reload Modes

DCEN	T2EX	Direction	Behavior
0	X	Up	BOTTOM →MAX reload to BOTTOM
1	0	Down	MAX →BOTTOM underflow to MAX
1	1	Up	BOTTOM →MAX overflow to BOTTOM

12.3.1 Up Counter

Figure 12-2 shows Timer 2 automatically counting up when DCEN = 0. In this mode Timer 2 counts up to MAX and then sets the TF2 bit upon overflow. The overflow also causes the timer registers to be reloaded with BOTTOM, the 16-bit value in RCAP2H and RCAP2L. If EXEN2 = 1, a 16-bit reload can be triggered either by an overflow or by a 1-to-0 transition at external input T2EX. This transition also sets the EXF2 bit. Both the TF2 and EXF2 bits can generate an interrupt. The Timer 2 overflow rate for this mode is given in the following equation:

$$\text{Auto-Reload Mode: DCEN} = 0 \qquad \text{Time-out Period} = \frac{65536 - \{\text{RCAP2H}, \text{RCAP2L}\}}{\text{System Frequency}} \times (\text{TPS} + 1)$$

Figure 12-2. Timer 2 Diagram: Auto-Reload Mode (DCEN = 0)

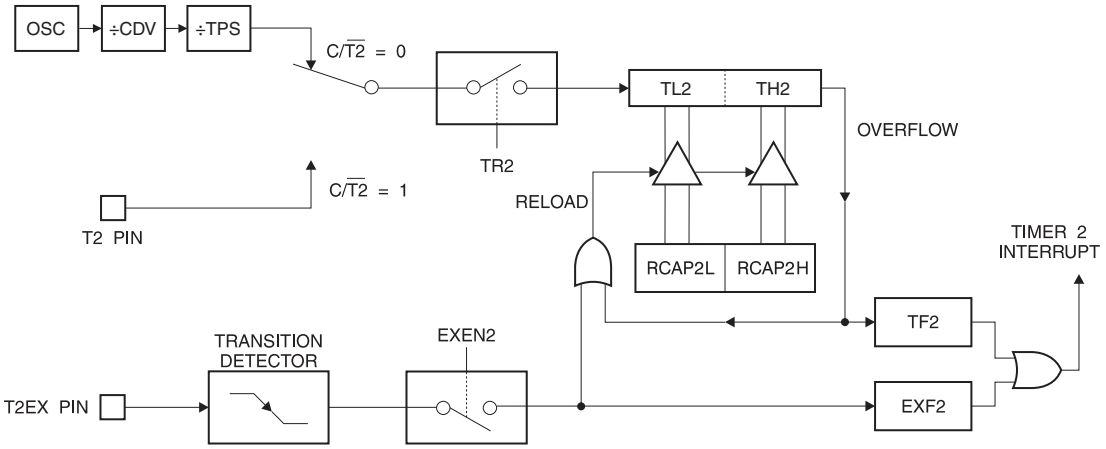

Figure 12-3. Timer 2 Waveform: Auto-Reload Mode (DCEN = 0)

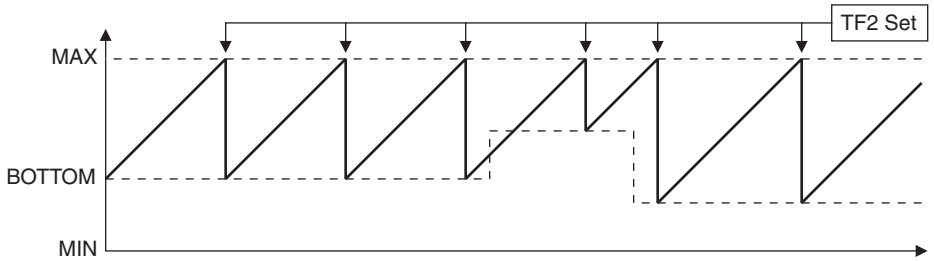

12.3.2 Up or Down Counter

Setting DCEN = 1 enables Timer 2 to count up or down, as shown in Figure 12-5. In this mode, the T2EX pin controls the direction of the count (if EXEN2 = 1). A logic 1 at T2EX makes Timer 2 count up. When $T2CM_{1-0}$ = 00B, the timer will overflow at MAX and set the TF2 bit. This overflow also causes BOTTOM, the 16-bit value in RCAP2H and RCAP2L, to be reloaded into the timer registers, TH2 and TL2, respectively. A logic 0 at T2EX makes Timer 2 count down. The timer underflows when TH2 and TL2 equal BOTTOM, the 16-bit value stored in RCAP2H and RCAP2L. The underflow sets the TF2 bit and causes MAX to be reloaded into the timer registers. The EXF2 bit toggles whenever Timer 2 overflows or underflows and can be used as a 17th bit of resolution. In this operating mode, EXF2 does not flag an interrupt.

The behavior of Timer 2 when DCEN is enabled is shown in Figure 12-4.

Figure 12-4. Timer 2 Waveform: Auto-Reload Mode (DCEN = 1)

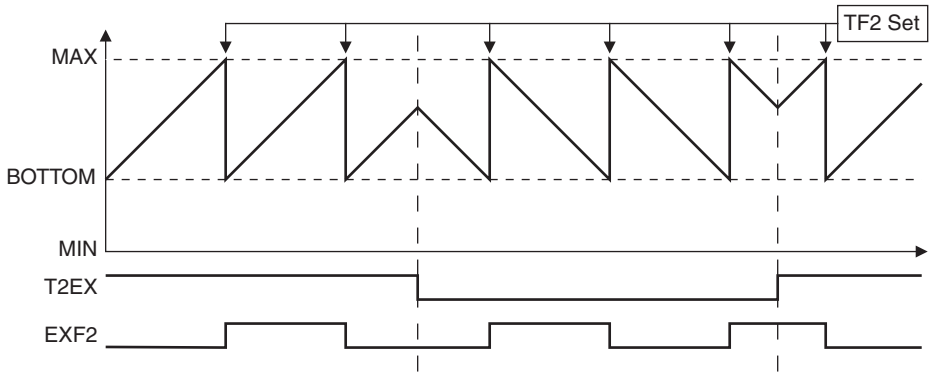

Figure 12-5. Timer 2 Diagram: Auto-Reload Mode (DCEN = 1)

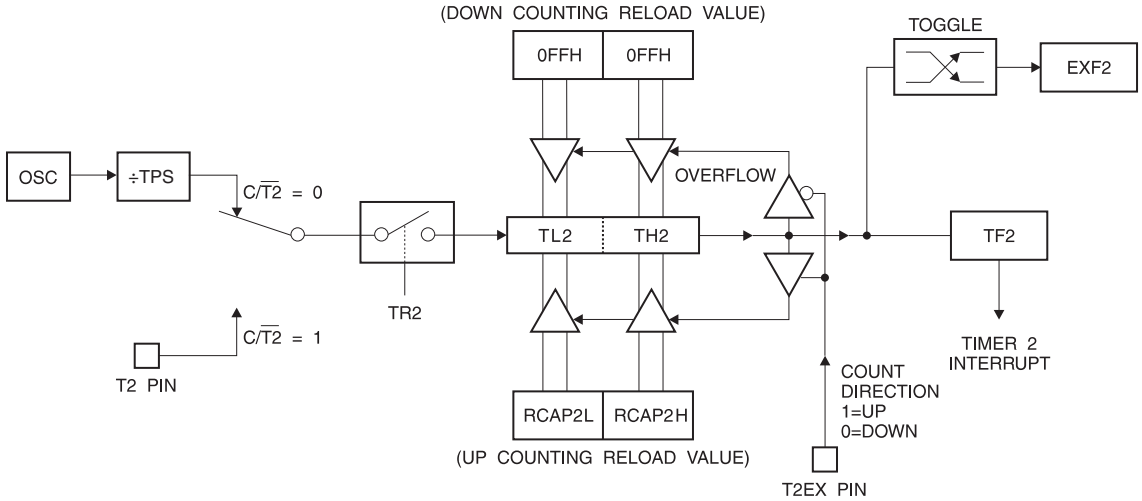

The timer overflow/underflow rate for up-down counting mode is the same as for up counting mode, provided that the count direction does not change. Changes to the count direction may result in longer or shorter periods between time-outs.

12.4 Baud Rate Generator

Timer 2 is selected as the baud rate generator by setting TCLK and/or RCLK in T2CON (Table 12-3). Note that the baud rates for transmit and receive can be different if Timer 2 is used for the receiver or transmitter and Timer 1 is used for the other function. Setting RCLK and/or TCLK puts Timer 2 into its baud rate generator mode, as shown in Figure 12-6.

The baud rate generator mode is similar to the auto-reload mode, in that a rollover in TH2 causes the Timer 2 registers to be reloaded with the 16-bit value in registers RCAP2H and RCAP2L, which are preset by software.

The baud rates in UART Modes 1 and 3 are determined by Timer 2's overflow rate according to the following equation.

$$\text{Modes 1 and 3 Baud Rates} = \frac{\text{Timer 2 Overflow Rate}}{16}$$

The Timer can be configured for either timer or counter operation. In most applications, it is configured for timer operation (CP/$\overline{T2}$ = 0). The baud rate formulas are given below.

$$\begin{matrix}\text{Modes 1, 3}\\ \text{Baud Rate}\end{matrix} = \frac{\text{System Frequency}}{16 \times (\text{TPS} + 1) \times [65536 - (\text{RCAP2H,RCAP2L})]}$$

where (RCAP2H, RCAP2L) is the content of RCAP2H and RCAP2L taken as a 16-bit unsigned integer.

Timer 2 as a baud rate generator is shown in Figure 12-6. This figure is valid only if RCLK or TCLK = 1 in T2CON. Note that a rollover in TH2 does not set TF2 and will not generate an interrupt. Note too, that if EXEN2 is set, a 1-to-0 transition in T2EX will set EXF2 but will not cause a reload from (RCAP2H, RCAP2L) to (TH2, TL2). Thus when Timer 2 is in use as a baud rate generator, T2EX can be used as an extra external interrupt. Also note that the Baud Rate and Frequency Generator modes may be used simultaneously.

Figure 12-6. Timer 2 in Baud Rate Generator Mode

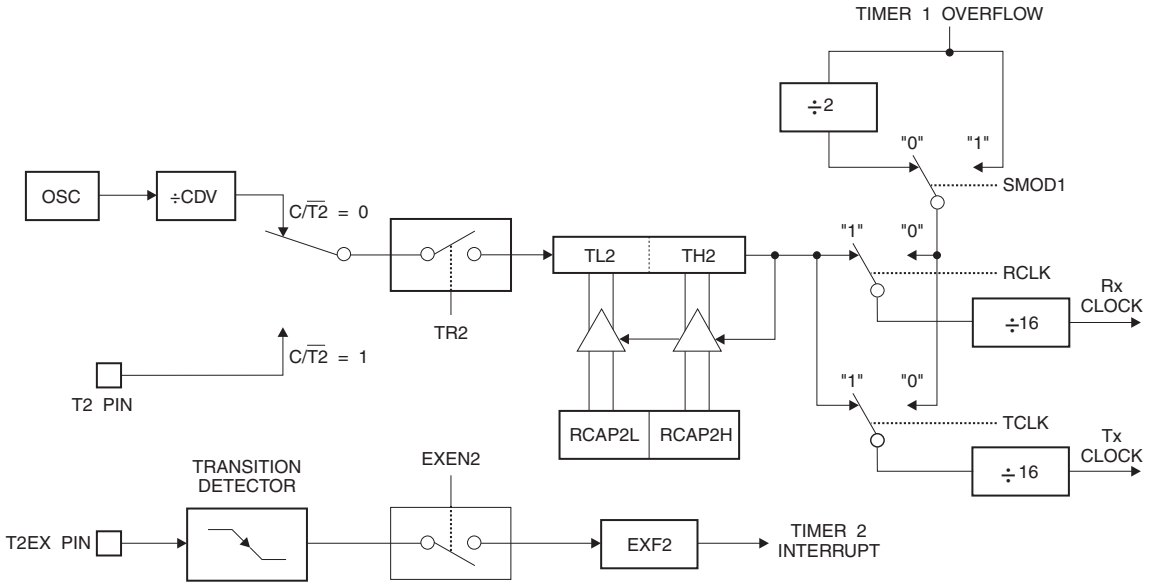

12.5 Frequency Generator (Programmable Clock Out)

Timer 2 can generate a 50% duty cycle clock on T2 (P1.0), as shown in Figure 13.. This pin, besides being a regular I/O pin, has two alternate functions. It can be programmed to input the external clock for Timer/Counter 2 or to toggle its output at every timer overflow. To configure the Timer/Counter 2 as a clock generator, bit C/$\overline{T2}$ (T2CON.1) must be cleared and bit T2OE (T2MOD.1) must be set. Bit TR2 (T2CON.2) starts and stops the timer. The clock-out frequency depends on the system frequency and the reload value of Timer 2 capture registers (RCAP2H, RCAP2L), as shown in the following equation.

$$\text{Clock Out Frequency} = \frac{\text{System Frequency}}{2 \times [65536 - (\text{RCAP2H,RCAP2L})]}$$

In the frequency generator mode, Timer 2 roll-overs will not generate an interrupt. This behavior is similar to when Timer 2 is used as a baud-rate generator. It is possible to use Timer 2 as a baud-rate generator and a clock generator simultaneously. Note, however, that the baud-rate and clock-out frequencies cannot be determined independently from one another since they both use RCAP2H and RCAP2L.

Figure 12-7. Timer 2 in Clock-out Mode

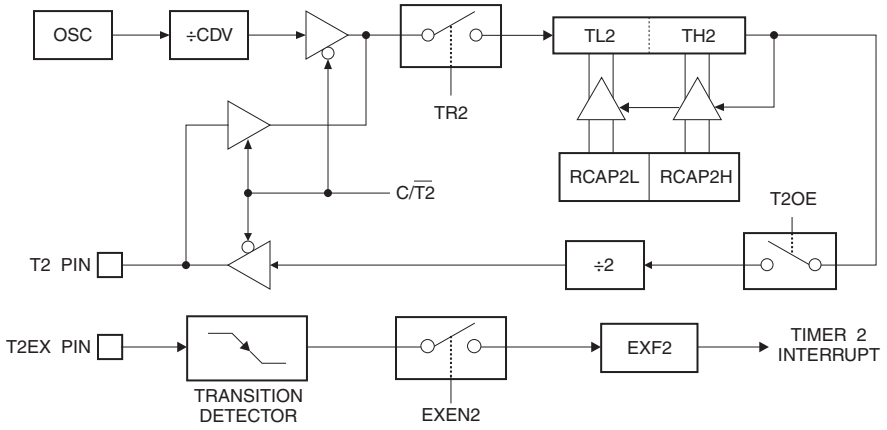

13. External Interrupts

The $\overline{INT0}$ (P3.2) and $\overline{INT1}$ (P3.3) pins of the AT89LP51/52 may be used as external interrupt sources. The external interrupts can be programmed to be level-activated or transition-activated by setting or clearing bit IT1 or IT0 in Register TCON. If ITx = 0, external interrupt x is triggered by a detected low at the $\overline{INTx}$ pin. If ITx = 1, external interrupt x is edge-triggered. In this mode if successive samples of the $\overline{INTx}$ pin show a high in one cycle and a low in the next cycle, interrupt request flag IEx in TCON is set. Flag bit IEx then requests the interrupt. Since the external interrupt pins are sampled once each clock cycle, an input high or low should hold for at least 2 system periods to ensure sampling. If the external interrupt is transition-activated, the external source has to hold the request pin high for at least two clock cycles, and then hold it low for at least two clock cycles to ensure that the transition is seen so that interrupt request flag IEx will be set. IEx will be automatically cleared by the CPU when the service routine is called if generated in edge-triggered mode. If the external interrupt is level-activated, the external source has to hold the request active until the requested interrupt is actually generated. Then the external source must deactivate the request before the interrupt service routine is completed, or else another interrupt will be generated. Both $\overline{INT0}$ and $\overline{INT1}$ may wake up the device from the Power-down state.

14. Serial Interface (UART)

The serial interface on the AT89LP51/52 implements a Universal Asynchronous Receiver/Transmitter (UART). The UART has the following features:

- Full-duplex Operation
- 8 or 9 Data Bits
- Framing Error Detection
- Multiprocessor Communication Mode with Automatic Address Recognition
- Baud Rate Generator Using Timer 1 or Timer 2
- Interrupt on Receive Buffer Full or Transmission Complete
- Synchronous SPI or TWI Master Emulation

The serial interface is full-duplex, which means it can transmit and receive simultaneously. It is also receive-buffered, which means it can begin receiving a second byte before a previously received byte has been read from the receive register. (However, if the first byte still has not been read when reception of the second byte is complete, one of the bytes will be lost.) The serial port receive and transmit registers are both accessed at the Special Function Register SBUF. Writing to SBUF loads the transmit register, and reading SBUF accesses a physically separate receive register. The serial port can operate in the following four modes.

- **Mode 0:** Serial data enters and exits through RXD. TXD outputs the shift clock. Eight data bits are transmitted/received, with the LSB first. The baud rate is programmable to 1/6 or 1/3 the system frequency in Compatibility mode, 1/4 or 1/2 the system frequency in Fast mode, or variable based on Time 1.
- **Mode 1:** 10 bits are transmitted (through TXD) or received (through RXD): a start bit (0), 8 data bits (LSB first), and a stop bit (1). On receive, the stop bit goes into RB8 in the Special Function Register SCON. The baud rate is variable based on Timer 1 or Timer 2.
- **Mode 2:** 11 bits are transmitted (through TXD) or received (through RXD): a start bit (0), 8 data bits (LSB first), a programmable 9th data bit, and a stop bit (1). On transmit, the 9th data bit (TB8 in SCON) can be assigned the value of “0” or “1”. For example, the parity bit (P, in the PSW) can be moved into TB8. On receive, the 9th data bit goes into RB8 in the

Special Function Register SCON, while the stop bit is ignored. The baud rate is programmable to either 1/16 or 1/32 the system frequency.

- **Mode 3:** 11 bits are transmitted (through TXD) or received (through RXD): a start bit (0), 8 data bits (LSB first), a programmable 9th data bit, and a stop bit (1). In fact, Mode 3 is the same as Mode 2 in all respects except the baud rate, which is variable based on Timer 1 or Timer 2 in Mode 3.

In all four modes, transmission is initiated by any instruction that uses SBUF as a destination register. Reception is initiated in Mode 0 by the condition RI = 0 and REN = 1. Reception is initiated in the other modes by the incoming start bit if REN = 1.

Table 14-1. SCON – Serial Port Control Register

SCON Address = 98H — Reset Value = 0000 0000B

Bit Addressable

	SM0/FE	SM1	SM2	REN	TB8	RB8	T1	RI
Bit	7	6	5	4	3	2	1	0

(SMOD0 = 0/1)[1]

Symbol	Function
FE	Framing error bit. This bit is set by the receiver when an invalid stop bit is detected. The FE bit is not cleared by valid frames and must be cleared by software. The SMOD0 bit must be set to enable access to the FE bit. FE will be set regardless of the state of SMOD0.
SM0	Serial Port Mode Bit 0, (SMOD0 must = 0 to access bit SM0)
SM1	Serial Port Mode Bit 1

SM0	SM1	Mode	Description	Baud Rate (Compat.)[2]	Baud Rate (Fast)[2]
0	0	0	shift register	$f_{SYS}/3$ or $f_{SYS}/6$ or Timer 1	$f_{SYS}/2$ or $f_{SYS}/4$ or Timer 1
0	1	1	8-bit UART	variable (Timer 1 or Timer 2)	variable (Timer 1 or Timer 2)
1	0	2	9-bit UART	$f_{SYS}/32$ or $f_{SYS}/16$	$f_{SYS}/32$ or $f_{SYS}/16$
1	1	3	9-bit UART	variable (Timer 1 or Timer 2)	variable (Timer 1 or Timer 2)

Symbol	Function
SM2	Enables the Automatic Address Recognition feature in Modes 2 or 3. If SM2 = 1 then RI will not be set unless the received 9th data bit (RB8) is 1, indicating an address, and the received byte is a Given or Broadcast Address. In Mode 1, if SM2 = 1 then RI will not be activated unless a valid stop bit was received, and the received byte is a Given or Broadcast Address. In Mode 0, SM2 determines the idle state of the shift clock such that the clock is the inverse of SM2, i.e. when SM2 = 0 the clock idles high and when SM2 = 1 the clock idles low.
REN	Enables serial reception. Set by software to enable reception. Clear by software to disable reception.
TB8	The 9th data bit that will be transmitted in Modes 2 and 3. Set or clear by software as desired. In Mode 0, setting TB8 enables Timer 1 as the shift clock generator.
RB8	In Modes 2 and 3, the 9th data bit that was received. In Mode 1, if SM2 = 0, RB8 is the stop bit that was received. In Mode 0, RB8 is not used.
TI	Transmit interrupt flag. Set by hardware at the end of the 8th bit time in Mode 0, or at the beginning of the stop bit in the other modes, in any serial transmission. Must be cleared by software.
RI	Receive interrupt flag. Set by hardware at the end of the 8th bit time in Mode 0, or halfway through the stop bit time in the other modes, in any serial reception (except see SM2). Must be cleared by software.

Notes: 1. SMOD0 is located at PCON.6.
2. f_{SYS} = system frequency. The baud rate depends on SMOD1 (PCON.7).

14.1 Multiprocessor Communications

Modes 2 and 3 have a special provision for multiprocessor communications. In these modes, 9 data bits are received, followed by a stop bit. The 9th bit goes into RB8. Then comes a stop bit. The port can be programmed such that when the stop bit is received, the serial port interrupt is activated only if RB8 = 1. This feature is enabled by setting bit SM2 in SCON.

The following example shows how to use the serial interrupt for multiprocessor communications. When the master processor must transmit a block of data to one of several slaves, it first sends out an address byte that identifies the target slave. An address byte differs from a data byte in that the 9th bit is “1” in an address byte and “0” in a data byte. With SM2 = 1, no slave is interrupted by a data byte. An address byte, however, interrupts all slaves. Each slave can examine the received byte and see if it is being addressed. The addressed slave clears its SM2 bit and prepares to receive the data bytes that follows. The slaves that are not addressed set their SM2 bits and ignore the data bytes. See “Automatic Address Recognition” on page 61.

The SM2 bit can be used to check the validity of the stop bit in Mode 1. In a Mode 1 reception, if SM2 = 1, the receive interrupt is not activated unless a valid stop bit is received.

14.2 Baud Rates

The baud rate in Mode 0 depends on the value of the SMOD1 bit in Special Function Register PCON.7. If SMOD1 = 0 (the value on reset) and TB8 = 0, the baud rate is 1/4 of the system frequency in Fast mode. If SMOD1 = 1 and TB8 = 0, the baud rate is 1/2 of the system frequency, as shown in the following equation:

$$\underset{TB8 = 0}{\text{Mode 0 Baud Rate}} = \frac{2^{SMOD1}}{4} \times \text{System Frequency}$$

:In Compatibility mode the baud rate is 1/6 of the system frequency, scaling to 1/3 when SMOD1 = 1.

$$\underset{TB8 = 0}{\text{Mode 0 Baud Rate}} = \frac{2^{SMOD1}}{6} \times \text{System Frequency}$$

The baud rate in Mode 2 also depends on the value of the SMOD1 bit. If SMOD1 = 0, the baud rate is 1/32 of the system frequency. If SMOD1 = 1, the baud rate is 1/16 of the system frequency, as shown in the following equation:

$$\text{Mode 2 Baud Rate} = \frac{2^{SMOD1}}{32} \times \text{System Frequency}$$

14.2.1 Using Timer 1 to Generate Baud Rates

Setting TB8 = 1 in Mode 0 enables Timer 1 as the baud rate generator. When Timer 1 is the baud rate generator for Mode 0, the baud rates are determined by the Timer 1 overflow rate and the value of SMOD1 according to the following equation:

$$\underset{TB8 = 1}{\text{Mode 0 Baud Rate}} = \frac{2^{SMOD1}}{4} \times \text{(Timer 1 Overflow Rate)}$$

The Timer 1 overflow rate normally determines the baud rates in Modes 1 and 3. When Timer 1 is the baud rate generator, the baud rates are determined by the Timer 1 overflow rate and the value of SMOD1 according to the following equation:

$$\begin{matrix}\text{Modes 1, 3}\\ \text{Baud Rate}\end{matrix} = \frac{2^{\text{SMOD1}}}{32} \times \text{(Timer 1 Overflow Rate)}$$

The Timer 1 interrupt should be disabled in this application. The Timer itself can be configured for either timer or counter operation in any of its 3 running modes. In the most typical applications, it is configured for timer operation in auto-reload mode (high nibble of TMOD = 0010B). In this case, the baud rate is given by the following formula:

$$\begin{matrix}\text{Modes 1, 3}\\ \text{Baud Rate}\end{matrix} = \frac{2^{\text{SMOD1}}}{32} \times \frac{\text{System Frequency}}{[256-(\text{TH1})]} \times \frac{1}{\text{TPS}+1}$$

Table 14-2 lists commonly used baud rates and how they can be obtained from Timer 1.

Table 14-2. Commonly Used Baud Rates Generated by Timer 1

Baud Rate	f_{OSC} (MHz)	CDV	SMOD1	Timer 1			
				C/$\overline{T}$	Mode	TPS	Reload Value
Mode 0 Max: 6 MHz	12	0	1	X	X	0	X
Mode 2 Max: 750K	12	0	1	X	X	0	X
Modes 1, 3 Max: 750K	12	0	1	0	2	0	F4H
19.2K	11.059	0	1	0	2	0	DCH
9.6K	11.059	0	0	0	2	0	DCH
4.8K	11.059	0	0	0	2	0	B8H
2.4K	11.059	0	0	0	2	0	70H
1.2K	11.059	0	0	0	1	0	FEE0H
137.5	11.986	0	0	0	1	0	F55CH
110	6	0	1	0	1	0	F2AFH
110	12	0	0	0	1	0	F2AFH
19.2K	11.059	1	1	0	2	5	FDH
9.6K	11.059	1	0	0	2	5	FDH
4.8K	11.059	1	0	0	2	5	FAH
2.4K	11.059	1	0	0	2	5	F4H
1.2K	11.059	1	0	0	2	5	E8H
137.5	11.986	1	0	0	2	5	1DH
110	6	1	0	0	2	5	72H
110	12	1	0	0	1	5	FEEBH

14.2.2 Using Timer 2 to Generate Baud Rates

Timer 2 is selected as the baud rate generator by setting TCLK and/or RCLK in T2CON. Under these conditions, the baud rates for transmit and receive can be simultaneously different by using Timer 1 for transmit and Timer 2 for receive, or vice versa. The baud rate generator mode

is similar to the auto-reload mode, in that a rollover causes the Timer 2 registers to be reloaded with the 16-bit value in registers RCAP2H and RCAP2L, which are preset by software. In this case, the baud rates in Modes 1 and 3 are determined by Timer 2's overflow rate according to the following equation:

$$\begin{matrix}\text{Modes 1 and 3}\\ \text{Baud Rate}\end{matrix} = \frac{1}{16} \times \frac{\text{System Frequency}}{[65536 - (\text{RCAP2H,RCAP2L})]}$$

Table 14-3 lists commonly used baud rates and how they can be obtained from Timer 2.

Table 14-3. Commonly Used Baud Rates Generated by Timer 2

Baud Rate	f_{osc} (MHz)	CDV	Timer 2			
			CP/$\overline{RL2}$	C/$\overline{T2}$	TCLK or RCLK	Reload Value
Max: 750K	12	0	0	0	1	FFFFH
19.2K	11.059	0	0	0	1	FFDCH
9.6K	11.059	0	0	0	1	FFB8H
4.8K	11.059	0	0	0	1	FF70H
2.4K	11.059	0	0	0	1	FEE0H
1.2K	11.059	0	0	0	1	FDC0H
137.5	11.986	0	0	0	1	EAB8H
110	6	0	0	0	1	F2AFH
110	12	0	0	0	1	E55EH
19.2K	11.059	1	0	0	1	FFEEH
9.6K	11.059	1	0	0	1	FFDCH
4.8K	11.059	1	0	0	1	FFB8H
2.4K	11.059	1	0	0	1	FF70H
1.2K	11.059	1	0	0	1	FEE0H
137.5	11.986	1	0	0	1	F55CH
110	12	1	0	0	1	F2AFH

14.3 Framing Error Detection

In addition to all of its usual modes, the UART can perform framing error detection by looking for missing stop bits, and automatic address recognition. When used for framing error detect, the UART looks for missing stop bits in the communication. A missing bit will set the FE bit in the SCON register. The FE bit shares the SCON.7 bit with SM0 and the function of SCON.7 is determined by PCON.6 (SMOD0). If SMOD0 is set then SCON.7 functions as FE. SCON.7 functions as SM0 when SMOD0 is cleared. When used as FE, SCON.7 can only be cleared by software. The FE bit will be set by a framing error regardless of the state of SMOD0.

14.4 Automatic Address Recognition

Automatic Address Recognition is a feature which allows the UART to recognize certain addresses in the serial bit stream by using hardware to make the comparisons. This feature saves a great deal of software overhead by eliminating the need for the software to examine every serial address which passes by the serial port. This feature is enabled by setting the SM2 bit in SCON for Modes 1, 2 or 3. In the 9-bit UART modes, Mode 2 and Mode 3, the Receive

Interrupt flag (RI) will be automatically set when the received byte contains either the “Given” address or the “Broadcast” address. The 9-bit mode requires that the 9th information bit be a “1” to indicate that the received information is an address and not data.

In Mode 1 (8-bit) the RI flag will be set if SM2 is enabled and the information received has a valid stop bit following the 8th address bits and the information is either a Given or Broadcast address. Automatic Address Recognition is not available during Mode 0.

Using the Automatic Address Recognition feature allows a master to selectively communicate with one or more slaves by invoking the given slave address or addresses. All of the slaves may be contacted by using the Broadcast address. Two special Function Registers are used to define the slave’s address, SADDR, and the address mask, SADEN. SADEN is used to define which bits in the SADDR are to be used and which bits are “don’t care”. The SADEN mask can be logically ANDed with the SADDR to create the “Given” address which the master will use for addressing each of the slaves. Use of the Given address allows multiple slaves to be recognized while excluding others. The following examples show the versatility of this scheme:

Slave 0	SADDR = 1100 0000
	SADEN = 1111 1101
	Given = 1100 00X0
Slave 1	SADDR = 1100 0000
	SADEN = 1111 1110
	Given = 1100 000X

In the previous example, SADDR is the same and the SADEN data is used to differentiate between the two slaves. Slave 0 requires a “0” in bit 0 and it ignores bit 1. Slave 1 requires a “0” in bit 1 and bit 0 is ignored. A unique address for slave 0 would be 1100 0010 since slave 1 requires a “0” in bit 1. A unique address for slave 1 would be 1100 0001 since a “1” in bit 0 will exclude slave 0. Both slaves can be selected at the same time by an address which has bit 0 = 0 (for slave 0) and bit 1 = 0 (for slave 1). Thus, both could be addressed with 1100 0000.

In a more complex system, the following could be used to select slaves 1 and 2 while excluding slave 0:

Slave 0	SADDR = 1100 0000
	SADEN = 1111 1001
	Given = 1100 0XX0
Slave 1	SADDR = 1110 0000
	SADEN = 1111 1010
	Given = 1110 0X0X
Slave 2	SADDR = 1110 0000
	SADEN = 1111 1100
	Given = 1110 00XX

In the above example, the differentiation among the 3 slaves is in the lower 3 address bits. Slave 0 requires that bit 0 = 0 and it can be uniquely addressed by 1110 0110. Slave 1 requires that bit 1 = 0 and it can be uniquely addressed by 1110 and 0101. Slave 2 requires that bit 2 = 0 and its unique address is 1110 0011. To select Slaves 0 and 1 and exclude Slave 2, use address 1110 0100, since it is necessary to make bit 2 = 1 to exclude slave 2.

The Broadcast Address for each slave is created by taking the logic OR of SADDR and SADEN. Zeros in this result are trended as don't cares. In most cases, interpreting the don't cares as ones, the broadcast address will be FF hexadecimal.

Upon reset SADDR (SFR address 0A9H) and SADEN (SFR address 0B9H) are loaded with "0"s. This produces a given address of all "don't cares" as well as a Broadcast address of all "don't cares". This effectively disables the Automatic Addressing mode and allows the microcontroller to use standard 80C51-type UART drivers which do not make use of this feature.

14.5 More About Mode 0

In Mode 0, the UART is configured as either a two wire half-duplex or three wire full-duplex synchronous serial interface. In two-wire mode serial data enters and exits through RXD and TXD outputs the shift clock. In three-wire mode serial data enters through MISO, exits through MOSI and SCK outputs the shift clock. Eight data bits are transmitted/received, with the LSB first. Figure 14-3 and Figure 14-5 on page 67 show simplified functional diagrams of the serial port in Mode 0 and associated timing. The baud rate is programmable to 1/2 or 1/4 the system frequency by setting/clearing the SMOD1 bit in Fast mode, or 1/3 or 1/6 the system frequency in Compatibility mode. However, changing SMOD1 has an effect on the relationship between the clock and data as described below. The baud rate can also be generated by Timer 1 by setting TB8. Table 14-4 lists the baud rate options for Mode 0.

Table 14-4. Mode 0 Baud Rates

TB8	SMOD1	Baud Rate (Fast)	Baud Rate (Compatibility)
0	0	$f_{SYS}/4$	$f_{SYS}/6$
0	1	$f_{SYS}/2$	$f_{SYS}/3$
1	0	(Timer 1 Overflow) / 4	(Timer 1 Overflow) / 4
1	1	(Timer 1 Overflow) / 2	(Timer 1 Overflow) / 2

14.5.1 Two-Wire (Half-Duplex) Mode

Transmission is initiated by any instruction that uses SBUF as a destination register. The "write to SBUF" signal also loads a "1" into the 9th position of the transmit shift register and tells the TX Control Block to begin a transmission. The internal timing is such that one full bit slot may elapse between "write to SBUF" and activation of SEND.

SEND transfers the output of the shift register to the alternate output function line of P3.0, and also transfers Shift Clock to the alternate output function line of P3.1. As data bits shift out to the right, "0"s come in from the left. When the MSB of the data byte is at the output position of the shift register, the "1" that was initially loaded into the 9th position is just to the left of the MSB, and all positions to the left of that contain "0"s. This condition flags the TX Control block to do one last shift, then deactivate SEND and set TI.

Reception is initiated by the condition REN = 1 and RI = 0. At the next clock cycle, the RX Control unit writes the bits 11111110B to the receive shift register and activates RECEIVE in the next clock phase. RECEIVE enables Shift Clock to the alternate output function line of P3.1. As data bits come in from the right, "1"s shift out to the left. When the "0" that was initially loaded into the right-most position arrives at the left-most position in the shift register, it flags the RX Control block to do one last shift and load SBUF. Then RECEIVE is cleared and RI is set.

The relationship between the shift clock and data is determined by the combination of the SM2 and SMOD1 bits as listed in Table 14-5 and shown in Figure . The SM2 bit determines the idle

state of the clock when not currently transmitting/receiving. The SMOD1 bit determines if the output data is stable for both edges of the clock, or just one.

Table 14-5. Mode 0 Clock and Data Modes

SM2	SMOD1	Clock Idle	Data Changes	Data Sampled
0	0	High	While clock is high	Positive edge of clock
0	1	High	Negative edge of clock	Positive edge of clock
1	0	Low	While clock is low	Negative edge of clock
1	1	Low	Negative edge of clock	Positive edge of clock

In Two-Wire configuration Mode 0 may be used as a hardware accelerator for software emulation of serial interfaces such as a half-duplex Serial Peripheral Interface (SPI) master in mode (0,0) or (1,1) or a Two-Wire Interface (TWI) in master mode. An example of Mode 0 emulating a TWI master device is shown in Figure 14-2. In this example, the start, stop, and acknowledge are handled in software while the byte transmission is done in hardware. Falling/rising edges on TXD are created by setting/clearing SM2. Rising/falling edges on RXD are forced by setting/clearing the P3.0 register bit. SM2 and P3.0 must be 1 while the byte is being transferred.

Figure 14-1. Mode 0 Waveforms (Two-Wire)

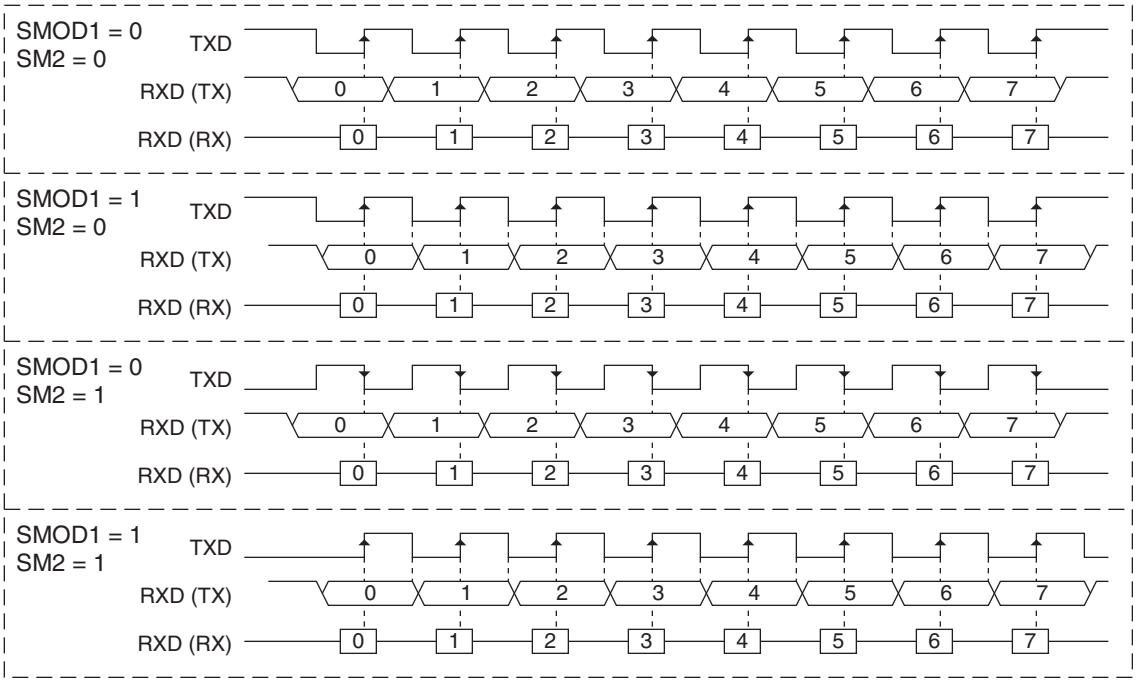

Figure 14-2. UART Mode 0 TWI Emulation (SMOD1 = 1)

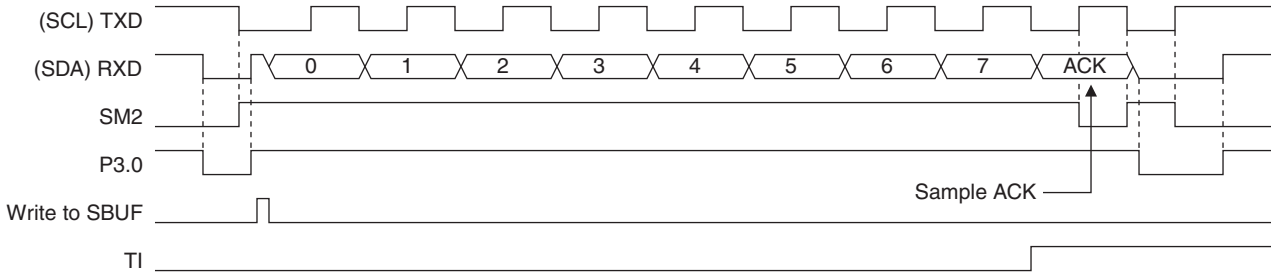

Figure 14-3. Serial Port Mode 0 (Two-Wire)

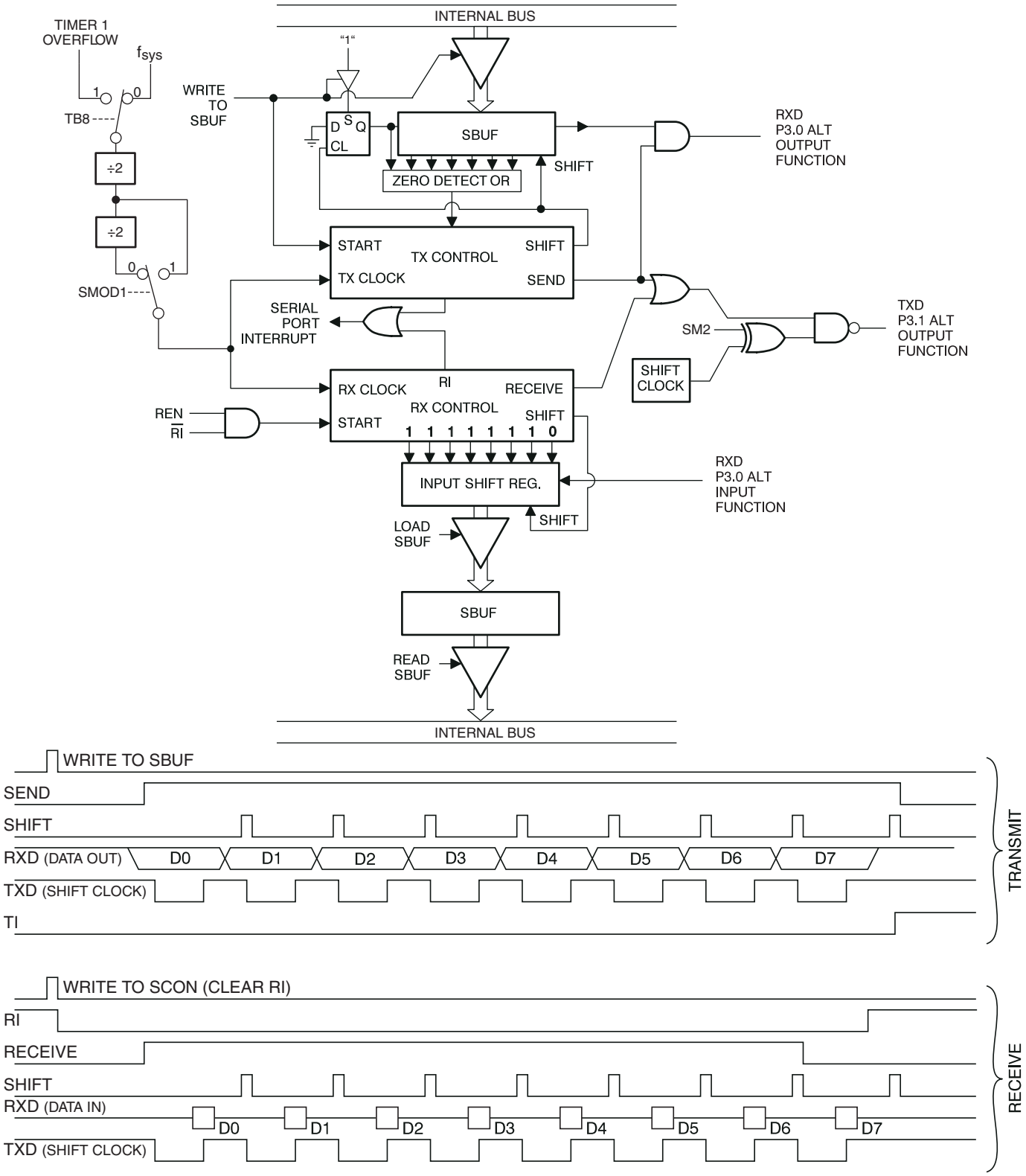

Mode 0 transfers data LSB first whereas SPI or TWI are generally MSB first. Emulation of these interfaces may require bit reversal of the transferred data bytes. The following code example reverses the bits in the accumulator:

```
EX:     MOV  R7, #8
REVRS:  RLC  A              ; C << msb (ACC)
        XCH  A, R6
        RRC  A              ; msb (ACC) >> B
        XCH  A, R6
        DJNZ R7, REVRS
```

14.5.2 Three-Wire (Full-Duplex) Mode

Three-Wire Mode is similar to Two-Wire except that the shift data input and data output are separated for full-duplex operation. Three-Wire Mode is enabled by setting the SPEN bit in TCONB. Transmission is initiated by any instruction that uses SBUF as a destination register. The “write to SBUF” signal also loads a “1” into the 9th position of the transmit shift register and tells the TX Control Block to begin a transmission. The internal timing is such that one full bit slot may elapse between “write to SBUF” and activation of SEND.

SEND transfers the output of the shift register to the alternate output function line of P1.5, and also transfers Shift Clock to the alternate output function line of P1.7. As data bits shift out to the right, “0”s come in from the left. When the MSB of the data byte is at the output position of the shift register, the “1” that was initially loaded into the 9th position is just to the left of the MSB, and all positions to the left of that contain “0”s. This condition flags the TX Control block to do one last shift, then deactivate SEND and set TI.

Reception occurs simultaneously with transmission if REN = 1. Data is input from P1.6. When REN = 1 any write to SBUF causes the RX Control unit to write the bits 11111110B to the receive shift register and activates RECEIVE in the next clock phase. As data bits come in from the right, “1”s shift out to the left. When the “0” that was initially loaded into the right-most position arrives at the left-most position in the shift register, it flags the RX Control block to do one last shift and load SBUF. Then RECEIVE is cleared and RI is set. When REN = 0, the receiver is not enabled. When a transmission occurs, SBUF will not be updated and RI will not be set even though serial data is received on P1.6.

The relationship between the shift clock and data is identical to Two-Wire mode as listed in Table 14-5 and shown in Figure . Three-Wire mode uses different I/Os from Two-Wire mode and can be connected to SPI slave devices as shownin Figure 14-4. It is possible to time share the UART hardware between SPI devices connected on P1 and UART devices on P3 with the caveat that any asynchronous receptions on the RXD pin will be ignored while the UART is in Mode 0.

Figure 14-4. SPI Connections for UART Mode 0

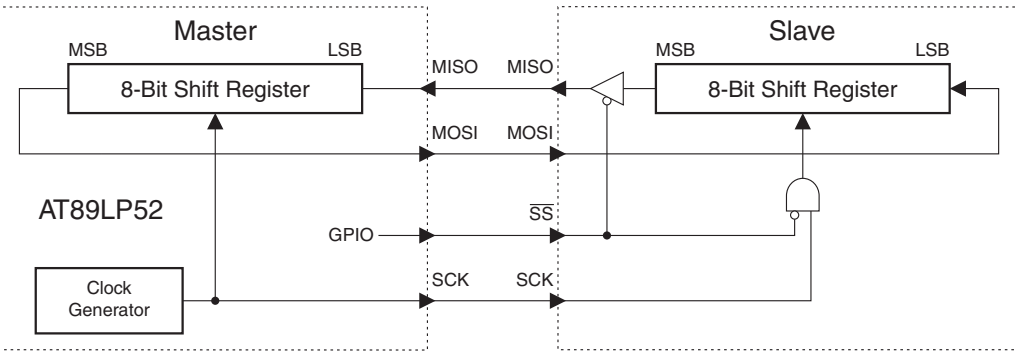

Figure 14-5. Serial Port Mode 0 (Three-Wire)

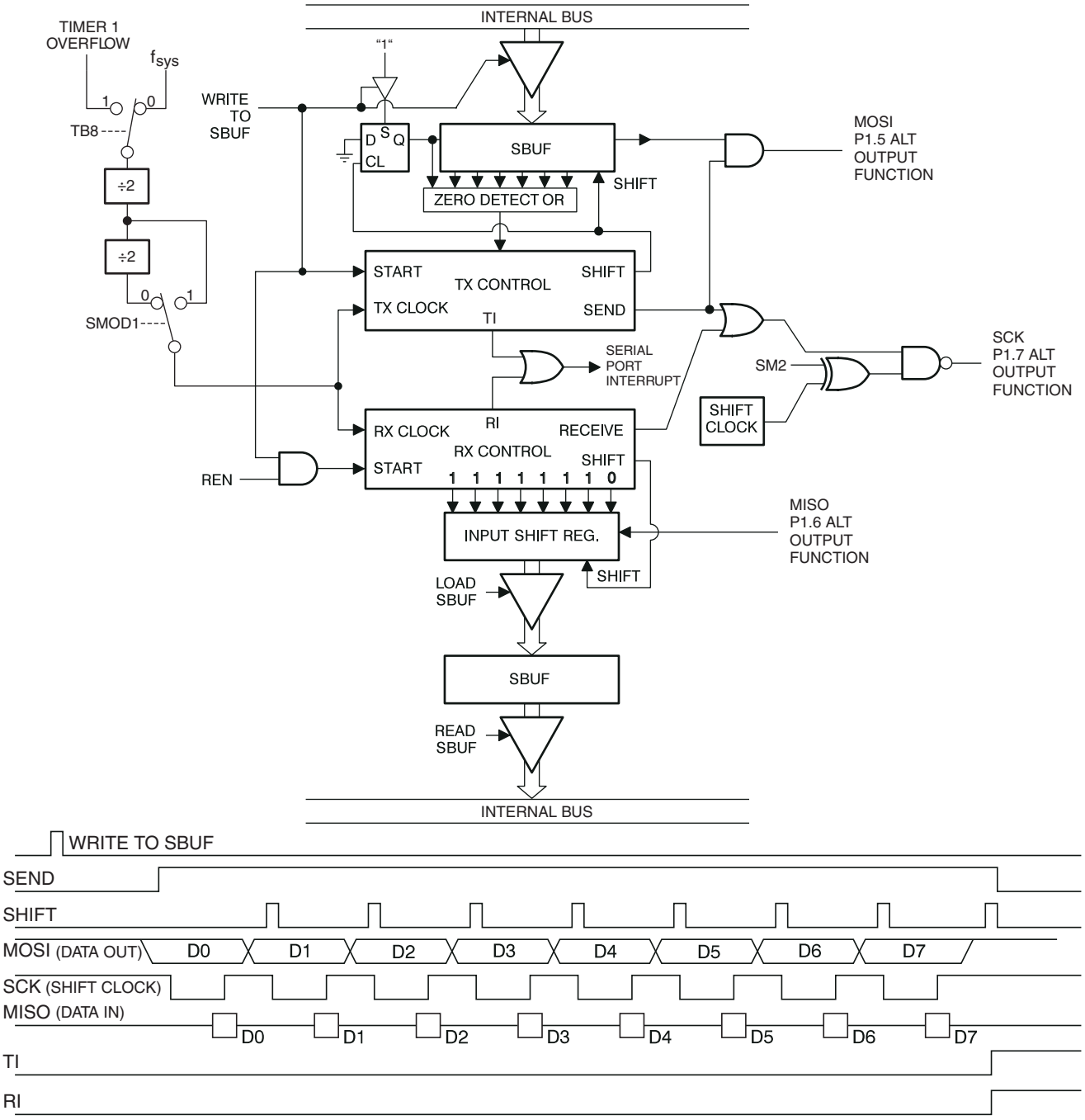

14.6 More About Mode 1

Ten bits are transmitted (through TXD), or received (through RXD): a start bit (0), 8 data bits (LSB first), and a stop bit (1). On receive, the stop bit goes into RB8 in SCON. In the AT89LP51/52, the baud rate is determined either by the Timer 1 overflow rate, the TImer 2 overflow rate, or both. In this case one timer is for transmit and the other is for receive. Figure 14-6 shows a simplified functional diagram of the serial port in Mode 1 and associated timings for transmit and receive.

Transmission is initiated by any instruction that uses SBUF as a destination register. The “write to SBUF” signal also loads a “1” into the 9th bit position of the transmit shift register and flags the TX Control unit that a transmission is requested. Transmission actually commences at S1P1 of the machine cycle following the next rollover in the divide-by-16 counter. Thus, the bit times are synchronized to the divide-by-16 counter, not to the “write to SBUF” signal.

The transmission begins when $\overline{\text{SEND}}$ is activated, which puts the start bit at TXD. One bit time later, DATA is activated, which enables the output bit of the transmit shift register to TXD. The first shift pulse occurs one bit time after that.

As data bits shift out to the right, “0”s are clocked in from the left. When the MSB of the data byte is at the output position of the shift register, the “1” that was initially loaded into the 9th position is just to the left of the MSB, and all positions to the left of that contain “0”s. This condition flags the TX Control unit to do one last shift, then deactivate $\overline{\text{SEND}}$ and set TI. This occurs at the tenth divide-by-16 rollover after “write to SBUF.”

Reception is initiated by a 1-to-0 transition detected at RXD. For this purpose, RXD is sampled at a rate of 16 times the established baud rate. When a transition is detected, the divide-by-16 counter is immediately reset, and 1FFH is written into the input shift register. Resetting the divide-by-16 counter aligns its roll-overs with the boundaries of the incoming bit times.

The 16 states of the counter divide each bit time into 16ths. At the 7th, 8th, and 9th counter states of each bit time, the bit detector samples the value of RXD. The value accepted is the value that was seen in at least 2 of the 3 samples. This is done to reject noise. In order to reject false bits, if the value accepted during the first bit time is not 0, the receive circuits are reset and the unit continues looking for another 1-to-0 transition. If the start bit is valid, it is shifted into the input shift register, and reception of the rest of the frame proceeds.

As data bits come in from the right, “1”s shift out to the left. When the start bit arrives at the left-most position in the shift register, (which is a 9-bit register in Mode 1), it flags the RX Control block to do one last shift, load SBUF and RB8, and set RI. The signal to load SBUF and RB8 and to set RI is generated if, and only if, the following conditions are met at the time the final shift pulse is generated.

RI = 0 and

Either SM2 = 0, or the received stop bit = 1

If either of these two conditions is not met, the received frame is irretrievably lost. If both conditions are met, the stop bit goes into RB8, the 8 data bits go into SBUF, and RI is activated. At this time, whether or not the above conditions are met, the unit continues looking for a 1-to-0 transition in RXD.

Figure 14-6. Serial Port Mode 1

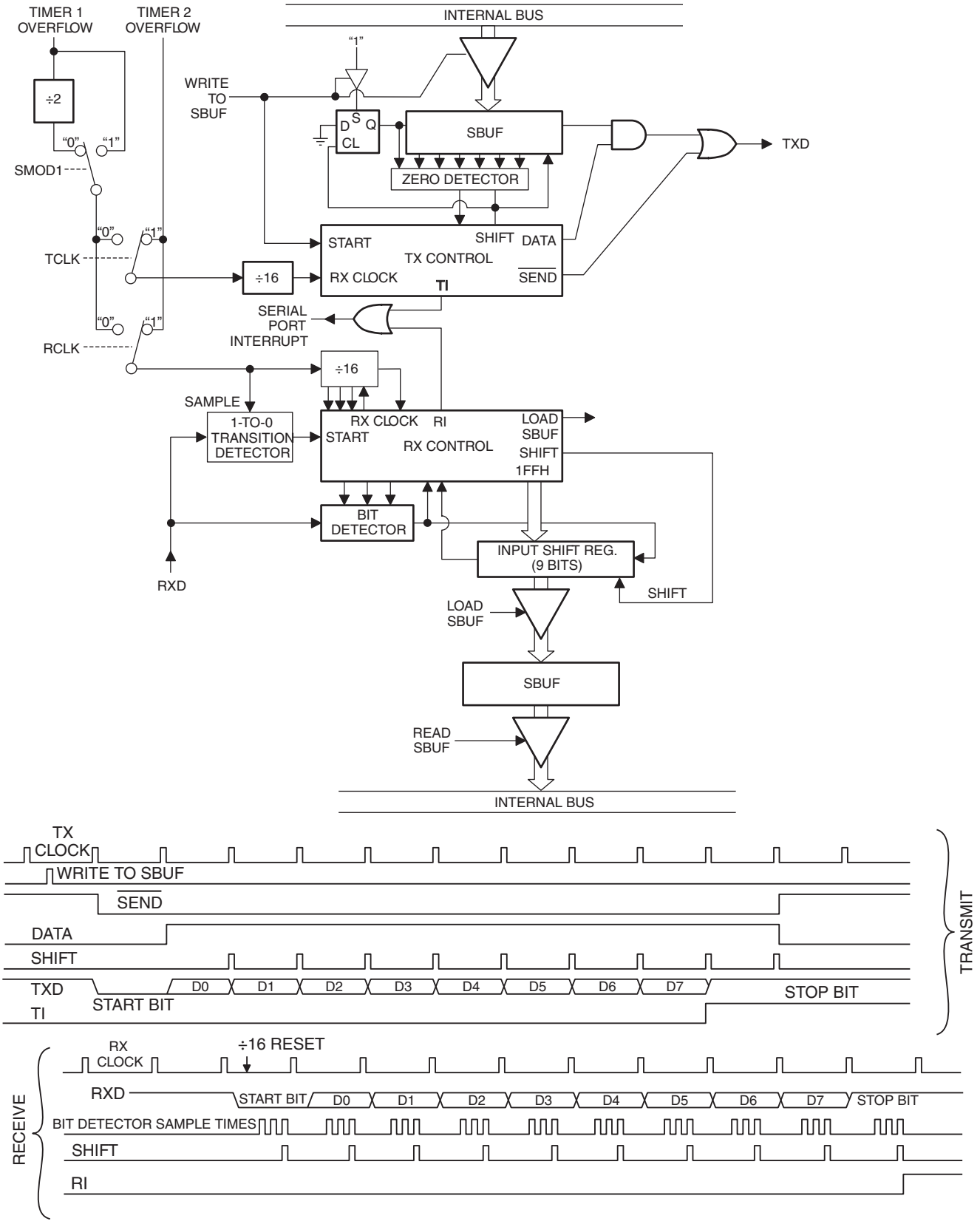

14.7 More About Modes 2 and 3

Eleven bits are transmitted (through TXD), or received (through RXD): a start bit (0), 8 data bits (LSB first), a programmable 9th data bit, and a stop bit (1). On transmit, the 9th data bit (TB8) can be assigned the value of “0” or “1”. On receive, the 9th data bit goes into RB8 in SCON. The baud rate is programmable to either 1/16 or 1/32 of the oscillator frequency in Mode 2. Mode 3 may have a variable baud rate generated from either Timer 1 or Timer 2, depending on the state of RCLK and TCLK.

Figures 14-7 and 14-8 show a functional diagram of the serial port in Modes 2 and 3. The receive portion is exactly the same as in Mode 1. The transmit portion differs from Mode 1 only in the 9th bit of the transmit shift register.

Transmission is initiated by any instruction that uses SBUF as a destination register. The “write to SBUF” signal also loads TB8 into the 9th bit position of the transmit shift register and flags the TX Control unit that a transmission is requested. Transmission commences at S1P1 of the machine cycle following the next rollover in the divide-by-16 counter. Thus, the bit times are synchronized to the divide-by-16 counter, not to the “write to SBUF” signal.

The transmission begins when $\overline{\text{SEND}}$ is activated, which puts the start bit at TXD. One bit time later, DATA is activated, which enables the output bit of the transmit shift register to TXD. The first shift pulse occurs one bit time after that. The first shift clocks a “1” (the stop bit) into the 9th bit position of the shift register. Thereafter, only “0”s are clocked in. Thus, as data bits shift out to the right, “0”s are clocked in from the left. When TB8 is at the output position of the shift register, then the stop bit is just to the left of TB8, and all positions to the left of that contain “0”s. This condition flags the TX Control unit to do one last shift, then deactivate SEND and set TI. This occurs at the 11th divide-by-16 rollover after “write to SBUF.”

Reception is initiated by a 1-to-0 transition detected at RXD. For this purpose, RXD is sampled at a rate of 16 times the established baud rate. When a transition is detected, the divide-by-16 counter is immediately reset, and 1FFH is written to the input shift register.

At the 7th, 8th and 9th counter states of each bit time, the bit detector samples the value of RXD. The value accepted is the value that was seen in at least 2 of the 3 samples. If the value accepted during the first bit time is not 0, the receive circuits are reset and the unit continues looking for another 1-to-0 transition. If the start bit proves valid, it is shifted into the input shift register, and reception of the rest of the frame proceeds.

As data bits come in from the right, “1”s shift out to the left. When the start bit arrives at the left-most position in the shift register (which in Modes 2 and 3 is a 9-bit register), it flags the RX Control block to do one last shift, load SBUF and RB8, and set RI. The signal to load SBUF and RB8 and to set RI is generated if, and only if, the following conditions are met at the time the final shift pulse is generated:

RI = 0, and

Either SM2 = 0 or the received 9th data bit = 1

If either of these conditions is not met, the received frame is irretrievably lost, and RI is not set. If both conditions are met, the received 9th data bit goes into RB8, and the first 8 data bits go into SBUF. One bit time later, whether the above conditions were met or not, the unit continues looking for a 1-to-0 transition at the RXD input.

Note that the value of the received stop bit is irrelevant to SBUF, RB8, or RI.

Figure 14-7. Serial Port Mode 2

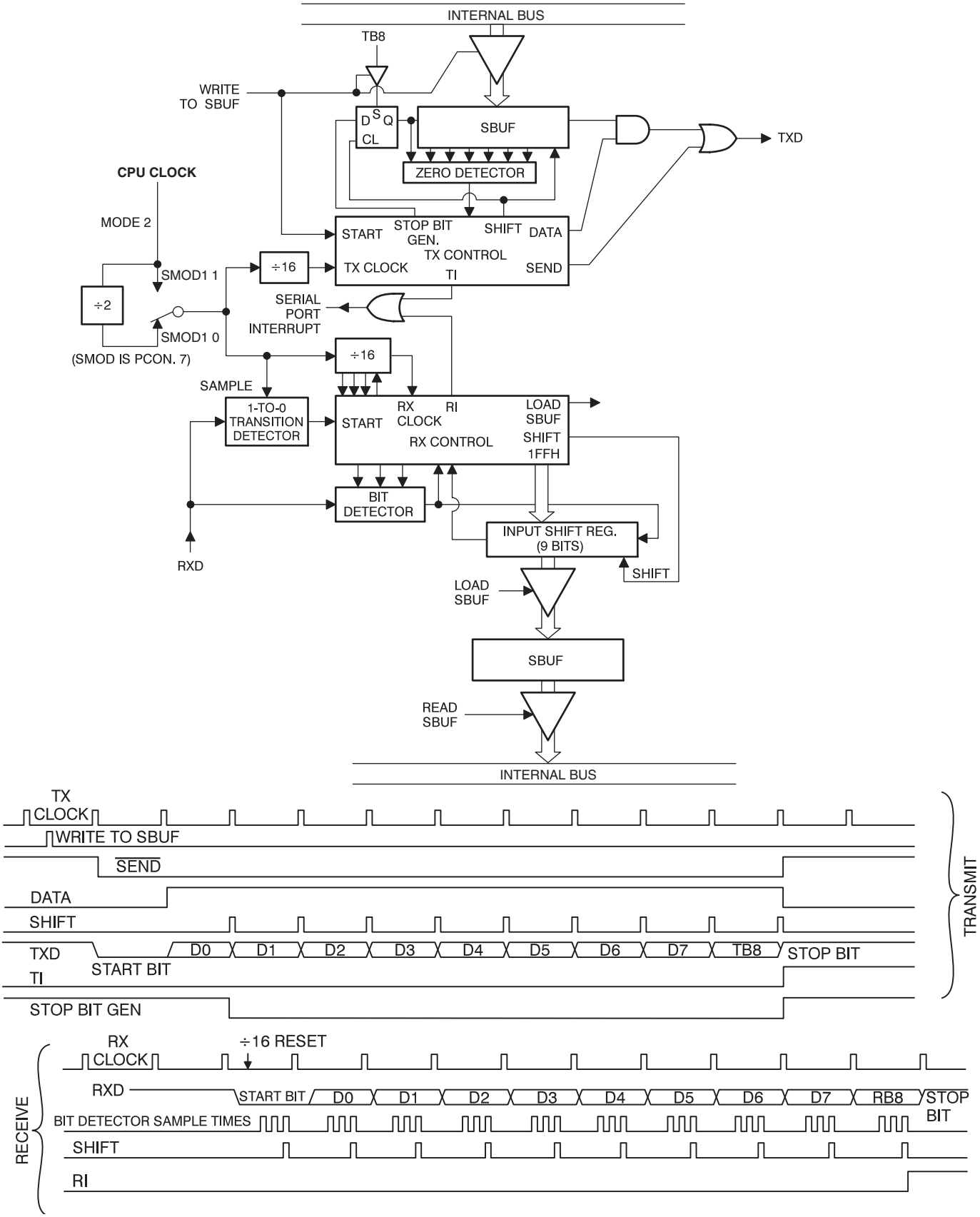

Figure 14-8. Serial Port Mode 3

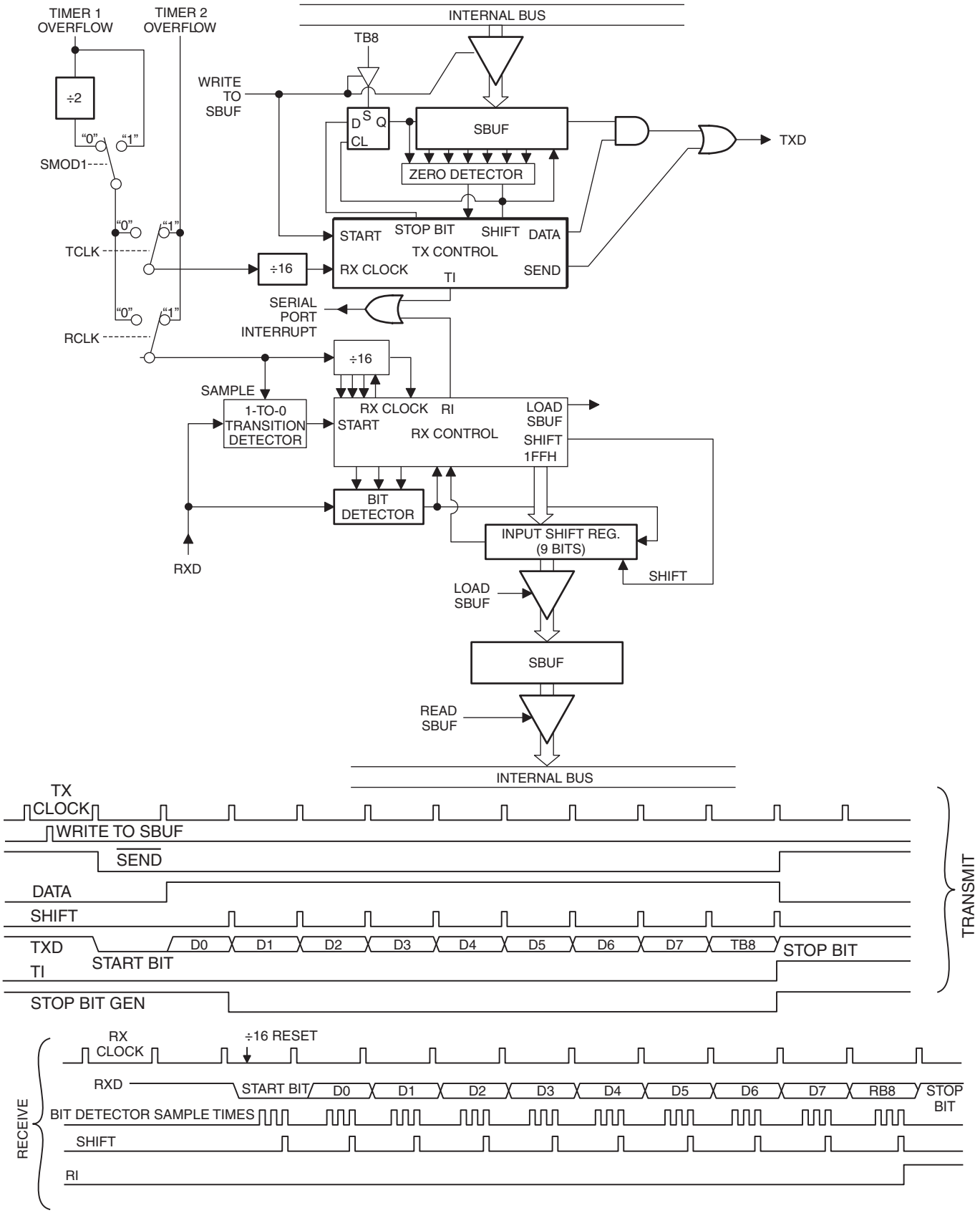

15. Programmable Watchdog Timer

The programmable Watchdog Timer (WDT) protects the system from incorrect execution by triggering a system reset when it times out after the software has failed to feed the timer prior to the timer overflow. By Default the WDT counts CPU clock cycles. The prescaler bits, PS0, PS1 and PS2 in SFR WDTCON are used to set the period of the Watchdog Timer from 16K to 2048K clock cycles. The Timer Prescaler can also be used to lengthen the time-out period (see Table 6-2 on page 31) The WDT is disabled by Reset and during Power-down mode. When the WDT times out without being serviced, an internal RST pulse is generated to reset the CPU. See Table 15-1 for the available WDT period selections.

Table 15-1. Watchdog Timer Time-out Period Selection

WDT Prescaler Bits			Period[1] (Clock Cycles)
PS2	PS1	PS0	
0	0	0	16K
0	0	1	32K
0	1	0	64K
0	1	1	128K
1	0	0	256K
1	0	1	512K
1	1	0	1024K
1	1	1	2048K

Note: 1. The WDT time-out period is dependent on the system clock frequency.

$$\text{Time-out Period} = \frac{2^{(PS+14)}}{\text{System Frequency}} \times (TPS+1)$$

The Watchdog Timer consists of a 14-bit timer with 7-bit programmable prescaler. Writing the sequence 1EH/E1H to the WDTRST register enables the timer. When the WDT is enabled, the WDTEN bit in WDTCON will be set to “1”. To prevent the WDT from generating a reset when if overflows, the watchdog feed sequence must be written to WDTRST before the end of the time-out period. To feed the watchdog, two write instructions must be sequentially executed successfully. Between the two write instructions, SFR reads are allowed, but writes are not allowed. The instructions should move 1EH to the WDTRST register and then 1EH to the WDTRST register. An incorrect feed or enable sequence will cause an immediate watchdog reset. The program sequence to feed or enable the watchdog timer is as follows:

```
MOV WDTRST, #01Eh
MOV WDTRST, #0E1h
```

15.1 Software Reset

A Software Reset of the AT89LP51/52 is accomplished by writing the software reset sequence 5AH/A5H to the WDTRST SFR. The WDT does not need to be enabled to generate the software reset. A normal software reset will set the SWRST flag in WDTCON. However, if at any time an incorrect sequence is written to WDTRST (i.e. anything other than 1EH/E1H or 5AH/A5H), a software reset will immediately be generated and both the SWRST and WDTOVF flags will be set. In this manner an intentional software reset may be distinguished from a software error-generated reset. The program sequence to generate a software reset is as follows:

```
MOV WDTRST, #05Ah
MOV WDTRST, #0A5h
```

Table 15-2. WDTCON – Watchdog Control Register

WDTCON Address = A7H — Reset Value = 0000 0XX0B

Not Bit Addressable

	PS2	PS1	PS0	WDIDLE[1]	DISRTO[1]	SWRST	WDTOVF	WDTEN
Bit	7	6	5	4	3	2	1	0

Symbol	Function
PS2 PS1 PS0	Prescaler bits for the watchdog timer (WDT). When all three bits are cleared to 0, the watchdog timer has a nominal period of 16K clock cycles. When all three bits are set to 1, the nominal period is 2048K clock cycles.
WDIDLE	WDT Disable during Idle[1]. When WDIDLE = 0 the WDT continues to count in Idle mode. When WDIDLE = 1 the WDT halts counting in Idle mode.
DISRTO	Disable Reset Output[1]. When DISTRO = 0 the reset pin is driven to the same level as POL when the WDT resets. When DISRTO = 1 the reset pin is input only.
SWRST	Software Reset Flag. Set when a software reset is generated by writing the sequence 5AH/A5H to WDTRST. Also set when an incorrect sequence is written to WDTRST. Must be cleared by software.
WDTOVF	Watchdog Overflow Flag. Set when a WDT rest is generated by the WDT timer overflow. Also set when an incorrect sequence is written to WDTRST. Must be cleared by software.
WDTEN	Watchdog Enable Flag. This bit is READ-ONLY and reflects the status of the WDT (whether it is running or not). The WDT is disabled after any reset and must be re-enabled by writing 1EH/E1H to WDTRST

Note: 1. WDTCON.4 and WDTCON.3 function as WDIDLE and DISRTO only in Fast mode. In Compatibility mode these bits are in AUXR. (See Table 3-3 on page 20)

Table 15-3. WDTRST – Watchdog Reset Register

WDTCON Address = A6H — **(Write-Only)**

Not Bit Addressable

	–	–	–	–	–	–	–	–
Bit	7	6	5	4	3	2	1	0

The WDT is enabled by writing the sequence 1EH/E1H to the WDTRST SFR. The current status may be checked by reading the WDTEN bit in WDTCON. To prevent the WDT from resetting the device, the same sequence 1EH/E1H must be written to WDTRST before the time-out interval expires. A software reset is generated by writing the sequence 5AH/A5H to WDTRST.

16. Instruction Set Summary

The AT89LP51/52 is fully binary compatible with the 8051 instruction set. In Compatibility mode the AT89LP51/52 has identical execution time with AT89S51/52 and other standard 8051s. The difference between the AT89LP51/52 in Fast mode and the standard 8051 is the number of cycles required to execute an instruction. Fast mode instructions may take 1 to 5 clock cycles to complete. The execution times of most instructions may be computed using Table 16-1. Note that for the purposes of this table, a clock cycle is one period of the output of the system clock divider. For Fast mode the divider defaults to 1, so the clock cycle equals the oscillator period. For Compatibility mode the divider defaults to 2, so the clock cycle is twice the oscillator period, or conversely the clock count is half the number of oscillator periods.

Table 16-1. Instruction Execution Times and Exceptions[1]

Generic Instruction Types	Fast Mode Cycle Count Formula
Most arithmetic, logical, bit and transfer instructions	# bytes
Branches and Calls	# bytes + 1
Single Byte Indirect (i.e. ADD A, @Ri, etc.)	2
RET, RETI	4
MOVC	3
MOVX	4[3]
MUL	2
DIV	4
INC DPTR	2

		Clock Cycles		
Arithmetic	**Bytes**	**Compatibility**	**Fast**	**Hex Code**
ADD A, Rn	1	6	1	28-2F
ADD A, direct	2	6	2	25
ADD A, @Ri	1	6	2	26-27
ADD A, #data	2	6	2	24
ADDC A, Rn	1	6	1	38-3F
ADDC A, direct	2	6	2	35
ADDC A, @Ri	1	6	2	36-37
ADDC A, #data	2	6	2	34
SUBB A, Rn	1	6	1	98-9F
SUBB A, direct	2	6	2	95
SUBB A, @Ri	1	6	2	96-97
SUBB A, #data	2	6	2	94
INC Rn	1	6	1	08-0F
INC direct	2	6	2	05
INC @Ri	1	6	2	06-07
INC A	2	6	2	04
DEC Rn	1	6	1	18-1F
DEC direct	2	6	2	15

Table 16-1. Instruction Execution Times and Exceptions[1] (Continued)

DEC @Ri	1	6	2	16-17
DEC A	2	6	2	14
INC DPTR	1	12	2	A3
INC /DPTR[2]	2	18	3	A5 A3
MUL AB	1	24	2	A4
DIV AB	1	24	4	84
DA A	1	6	1	D4
		Clock Cycles		
Logical	**Bytes**	**Compatibility**	**Fast**	**Hex Code**
CLR A	1	6	1	E4
CPL A	1	6	1	F4
ANL A, Rn	1	6	1	58-5F
ANL A, direct	2	6	2	55
ANL A, @Ri	1	6	2	56-57
ANL A, #data	2	6	2	54
ANL direct, A	2	6	2	52
ANL direct, #data	3	12	3	53
ORL A, Rn	1	6	1	48-4F
ORL A, direct	2	6	2	45
ORL A, @Ri	1	6	2	46-47
ORL A, #data	2	6	2	44
ORL direct, A	2	6	2	42
ORL direct, #data	3	12	3	43
XRL A, Rn	1	6	1	68-6F
XRL A, direct	2	6	2	65
XRL A, @Ri	1	6	2	66-67
XRL A, #data	2	6	2	64
XRL direct, A	2	6	2	62
XRL direct, #data	3	12	3	63
RL A	1	6	1	23
RLC A	1	6	1	33
RR A	1	6	1	03
RRC A	1	6	1	13
SWAP A	1	6	1	C4
		Clock Cycles		
Data Transfer	**Bytes**	**Compatibility**	**Fast**	**Hex Code**
MOV A, Rn	1	6	1	E8-EF
MOV A, direct	2	6	2	E5
MOV A, @Ri	1	6	2	E6-E7

Table 16-1. Instruction Execution Times and Exceptions[1] (Continued)

MOV A, #data	2	6	2	74
MOV Rn, A	1	6	1	F8-FF
MOV Rn, direct	2	12	2	A8-AF
MOV Rn, #data	2	6	2	78-7F
MOV direct, A	2	6	2	F5
MOV direct, Rn	2	12	2	88-8F
MOV direct, direct	3	12	3	85
MOV direct, @Ri	2	12	2	86-87
MOV direct, #data	3	12	3	75
MOV @Ri, A	1	6	1	F6-F7
MOV @Ri, direct	2	12	2	A6-A7
MOV @Ri, #data	2	6	2	76-77
MOV DPTR, #data16	3	12	3	90
MOV /DPTR, #data16[2]	4	–	4	A5 90
MOVC A, @A+DPTR	1	12	3	93
MOVC A, @A+/DPTR[2]	2	–	4	A5 93
MOVC A, @A+PC	1	12	3	83
MOVX A, @Ri	1	12	2	E2-E3
MOVX A, @DPTR	1	12[3]	4[3]	E0
MOVX A, @/DPTR[2]	2	18[3]	5[3]	A5 E0
MOVX @Ri, A	1	12	2	F2-F3
MOVX @DPTR, A	1	12[3]	4[3]	F0
MOVX @/DPTR, A[2]	2	18[3]	5[3]	A5 F0
PUSH direct	2	12	2	C0
POP direct	2	12	2	D0
XCH A, Rn	1	6	1	C8-CF
XCH A, direct	2	6	2	C5
XCH A, @Ri	1	6	2	C6-C7
XCHD A, @Ri	1	6	2	D6-D7
		Clock Cycles		
Bit Operations	**Bytes**	**Compatibility**	**Fast**	**Hex Code**
CLR C	1	6	1	C3
CLR bit	2	6	2	C2
SETB C	1	6	1	D3
SETB bit	2	6	2	D2
CPL C	1	6	1	B3
CPL bit	2	6	2	B2
ANL C, bit	2	12	2	82
ANL C, bit	2	12	2	B0

Table 16-1. Instruction Execution Times and Exceptions[1] (Continued)

ORL C, bit	2	12	2	72
ORL C, /bit	2	12	2	A0
MOV C, bit	2	6	2	A2
MOV bit, C	2	12	2	92
		Clock Cycles		
Branching	**Bytes**	**Compatibility**	**Fast**	**Hex Code**
JC rel	2	12	3	40
JNC rel	2	12	3	50
JB bit, rel	3	12	4	20
JNB bit, rel	3	12	4	30
JBC bit, rel	3	12	4	10
JZ rel	2	12	3	60
JNZ rel	2	12	3	70
SJMP rel	2	12	3	80
ACALL addr11	2	12	3	11,31,51,71,91, B1,D1,F1
LCALL addr16	3	12	4	12
RET	1	12	4	22
RETI	1	12	4	32
AJMP addr11	2	12	3	01,21,41,61,81, A1,C1,E1
LJMP addr16	3	12	4	02
JMP @A+DPTR	1	12	2	73
JMP @A+PC[2]	2	12	3	A5 73
CJNE A, direct, rel	3	12	4	B5
CJNE A, #data, rel	3	12	4	B4
CJNE Rn, #data, rel	3	12	4	B8-BF
CJNE @Ri, #data, rel	3	12	4	B6-B7
CJNE A, @R0, rel[2]	3	18	4	A5 B6
CJNE A, @R1, rel[2]	3	18	4	A5 B7
DJNZ Rn, rel	2	12	3	D8-DF
DJNZ direct, rel	3	12	4	D5
NOP	1	6	1	00

Notes:
1. A clock cycle is one period of the output of the system clock divider. For Fast mode the divider defaults to 1, so the clock cycle equals the oscillator period. For Compatibility mode the divider defaults to 2, so the clock cycle is twice the oscillator period, or conversely the clock count is half the number of oscillator periods.
2. This escaped instruction is an extension to the instruction set.
3. This is the minimum time for MOVX with no wait states. In Compatibility mode an additional 24 clocks are added for the wait state. In Fast mode, 1 clock is added for each wait state (0–3).

17. Programming the Flash Memory

The Atmel AT89LP51/52 microcontroller features 8K bytes of on-chip In-System Programmable Flash program memory and 256bytes of nonvolatile Flash data memory. In-System Programming allows programming and reprogramming of the microcontroller positioned inside the end system. Using a simple 3-wire SPI interface, the programmer communicates serially with the AT89LP51/52 microcontroller, reprogramming all nonvolatile memories on the chip. In-System Programming eliminates the need for physical removal of the chips from the system. This will save time and money, both during development in the lab, and when updating the software or parameters in the field. The programming interface of the AT89LP51/52 includes the following features:

- Three-wire serial SPI Programming Interface or 11-pin Parallel Interface
- Selectable Polarity Reset Entry into Programming
- User Signature Array
- Flexible Page Programming
- Row Erase Capability
- Page Write with Auto-Erase Commands
- Programming Status Register

For more detailed information on In-System Programming, refer to the Application Note entitled “AT89LP In-System Programming Specification”.

17.1 Physical Interface

The AT89LP51/52 provides a standard programming command set with two physical interfaces: a bit-serial and a byte-parallel interface. Normal Flash programming utilizes the Serial Peripheral Interface (SPI) pins of an AT89LP51/52 microcontroller. The SPI is a full-duplex synchronous serial interface consisting of three wires: Serial Clock (SCK), Master-In/Slave-out (MISO), and Master-out/Slave-in (MOSI)). When programming an AT89LP51/52 device, the programmer always operates as the SPI master, and the target system always operates as the SPI slave. To enter or remain in Programming mode the device’s reset line (RST) must be held active. With the addition of VDD and GND, an AT89LP51/52 microcontroller can be programmed with a minimum of seven connections as shown in Figure 17-1.

Figure 17-1. In-System Programming Device Connections

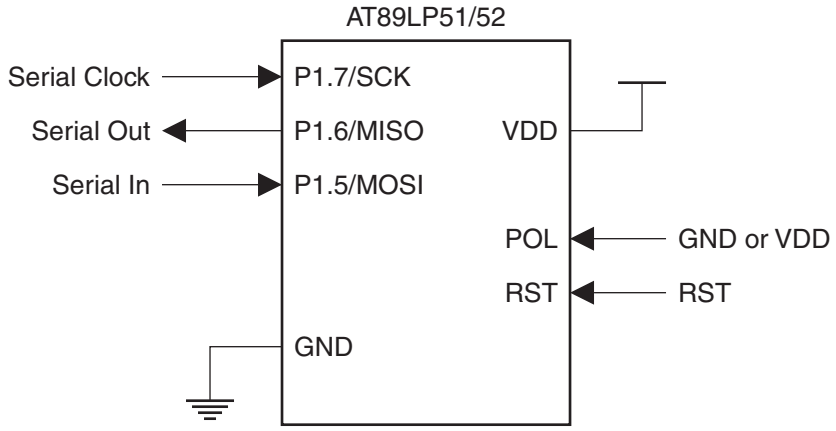

The Parallel interface is a special mode of the serial interface, i.e. the serial interface is used to enable the parallel interface. After enabling the interface serially over P1.7/SCK and P1.5/MOSI, P1.5 is reconfigured as an active-low output enable ($\overline{OE}$) for data on Port 0. When $\overline{OE}$ = 1, command, address and write data bytes are input on Port 0 and sampled at the rising edge of SCK. When $\overline{OE}$ = 0, read data bytes are output on Port 0 and should be sampled on the falling edge of SCK. The P1.7/SCK and RST pins continue to function in the same manner. With the addition of VDD and GND, the parallel interface requires a minimum of fourteen connections as shown in Figure 17-2. Note that a connection to P1.6/MISO is not required for using the parallel interface.

Figure 17-2. Parallel Programming Device Connections

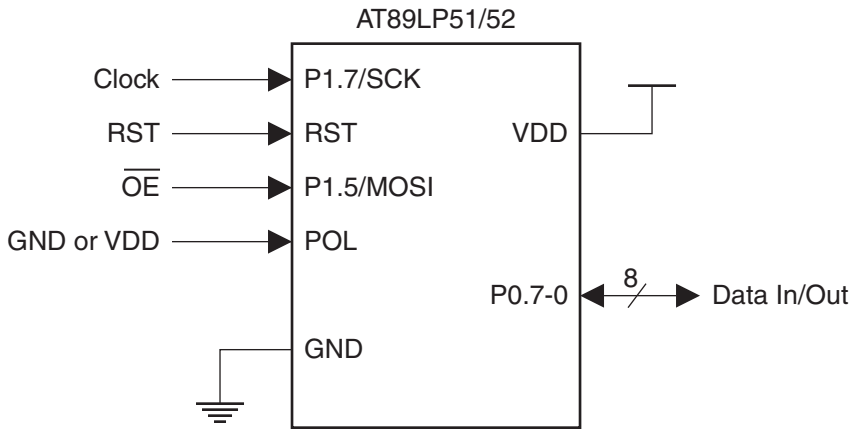

The Programming Interface is the only means of externally programming the AT89LP51/52 microcontroller. The Interface can be used to program the device both in-system and in a standalone serial programmer. The Interface does not require any clock other than SCK and is not limited by the system clock frequency. During Programming the system clock source of the target device can operate normally.

When designing a system where In-System Programming will be used, the following observations must be considered for correct operation:

- The ISP interface uses the SPI clock mode 0 (CPOL = 0, CPHA = 0) exclusively with a maximum frequency of 5 MHz.
- The AT89LP51/52 will enter programming mode only when its reset line (RST) is active. To simplify this operation, it is recommended that the target reset can be controlled by the In-System programmer. To avoid problems, the In-System programmer should be able to keep the entire target system reset for the duration of the programming cycle. The target system should never attempt to drive the three SPI lines while reset is active.
- The ISP Enable Fuse must be set to allow programming during any reset period. If the ISP Fuse is disabled, ISP may only be entered at POR. To enter programming the RST pin must be driven active prior to the end of Power-On Reset (POR). After POR has completed the device will remain in ISP mode until RST is brought inactive. Once the initial ISP session has ended, the power to the target device must be cycled OFF and ON to enter another session. Note that if this method is required, an active-low reset polarity is recommended.
- For standalone programmers, an active-low reset polarity is recommended (POL = 0). RST may then be tied directly to GND to ensure correct entry into Programming mode regardless of the device settings.

17.2 Memory Organization

The AT89LP51/52 offers 8K bytes of In-System Programmable (ISP) nonvolatile Flash code memory and 256 bytes of nonvolatile Flash data memory. In addition, the device contains a 256-byte User Signature Array and a 128-byte read-only Atmel Signature Array. The memory organization is shown in Table 17-1 and Figure 17-3. The memory is divided into pages of 128 bytes each. A single read or write command may only access half a page (64 bytes) in the memory; however, write with auto-erase commands will erase an entire 128-byte page even though they can only write one half page. Each memory type resides in its own address space and is accessed by commands specific to that memory. However, all memory types share the same page size.

User configuration fuses are mapped as a row in the memory, with each byte representing one fuse. From a programming standpoint, fuses are treated the same as normal code bytes except they are not affected by Chip Erase. Fuses can be enabled at any time by writing 00h to the appropriate locations in the fuse row. However, to disable a fuse, i.e. set it to FFh, the **entire** fuse row must be erased and then reprogrammed. The programmer should read the state of all the fuses into a temporary location, modify those fuses which need to be disabled, then issue a Fuse Write with Auto-Erase command using the temporary data. Lock bits are treated in a similar manner to fuses except they may only be erased (unlocked) by Chip Erase.

Table 17-1. AT89LP51/52 Memory Organization

Memory	Capacity	Page Size	# Pages	Address Range
CODE	4096 bytes 8192 bytes	128 bytes	32 64	0000H – 0FFFH 0000H – 1FFFH
DATA	256 bytes	128 bytes	2	0000H – 00FFH
User Signature	256 bytes	128 bytes	2	0000H – 00FFH
Atmel Signature	128 bytes	128 bytes	1	0000H – 007FH

Figure 17-3. AT89LP52 Memory Organization

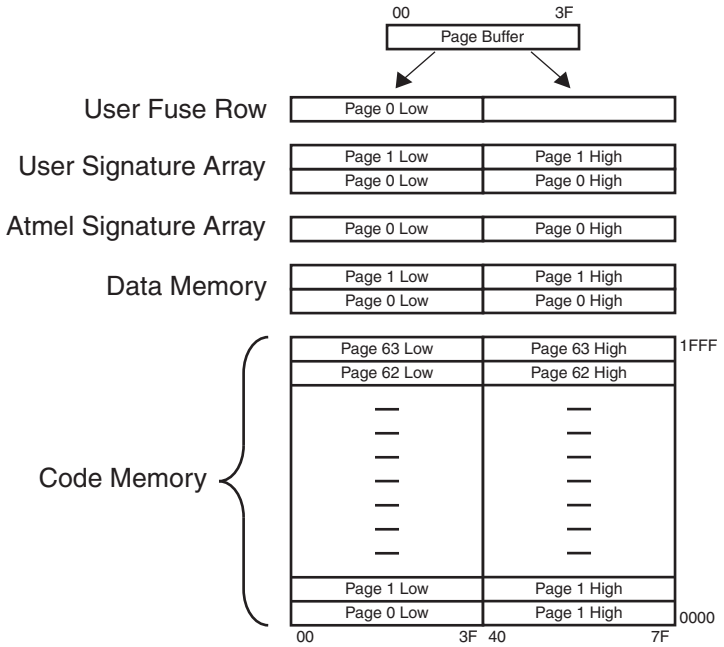

17.3 Command Format

Programming commands consist of an opcode byte, two address bytes, and one or 64 data bytes. Figure 17-4 on page 82 shows a simplified flow chart of a command sequence.

A sample command packet is shown in Figure 17-5 on page 83. The packet does not use a chip select. Command bytes are issued serially on MOSI. Data output bytes are received serially on MISO. The command is not complete until all bytes have been transfered, including any don't care bytes.

Page oriented instructions always include a full 16-bit address. The higher order bits select the page and the lower order bits select the byte within that page. The AT89LP51/52 allocates 6 bits for byte address, 1 bit for low/high half page selection and 9 bits for page address. The half page to be accessed is always fixed by the page address and half select as transmitted. The byte address specifies the starting address for the first data byte. After each data byte has been transmitted, the byte address is incremented to point to the next data byte. This allows a page command to linearly sweep the bytes within a page. If the byte address is incremented past the last byte in the half page, the byte address will roll over to the first byte in the same half page. While loading bytes into the page buffer, overwriting previously loaded bytes will result in data corruption.

For a summary of available commands, see Table 17-2 on page 84.

Figure 17-4. Command Sequence Flow Chart

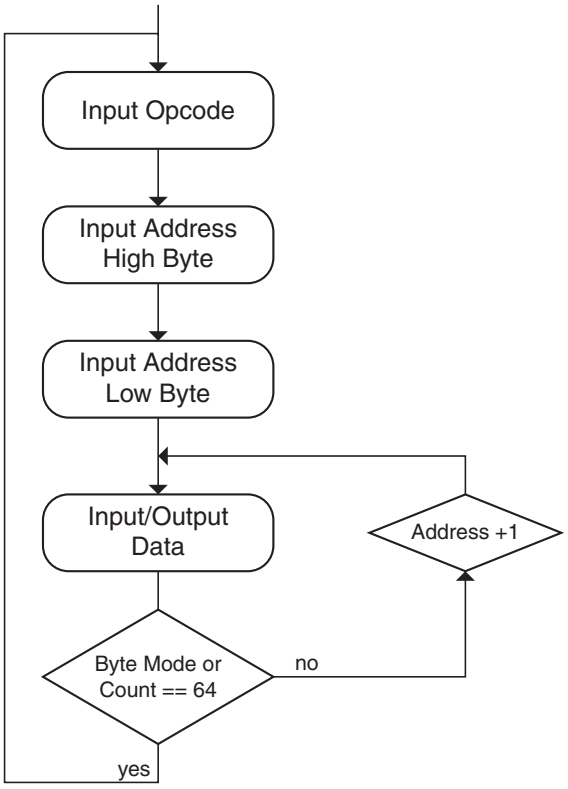

Figure 17-5. ISP Command Packet (Serial Byte)

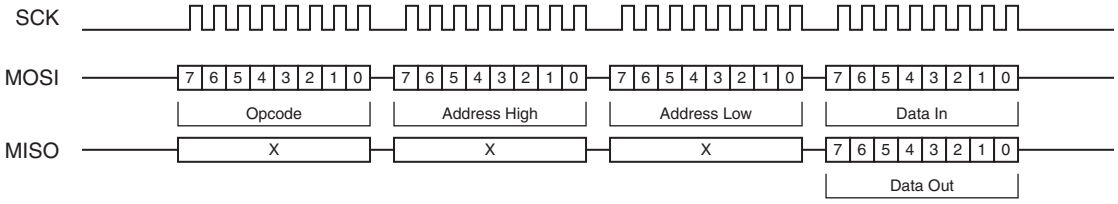

Figure 17-6. ISP Command Packet (Serial Page)

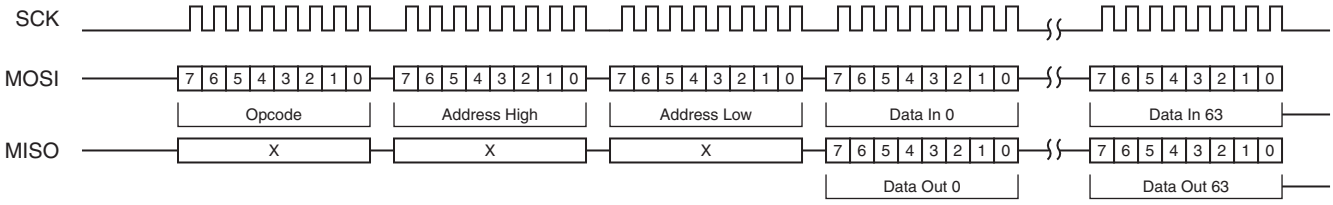

Figure 17-7. ISP Command Packet (Parallel Byte)

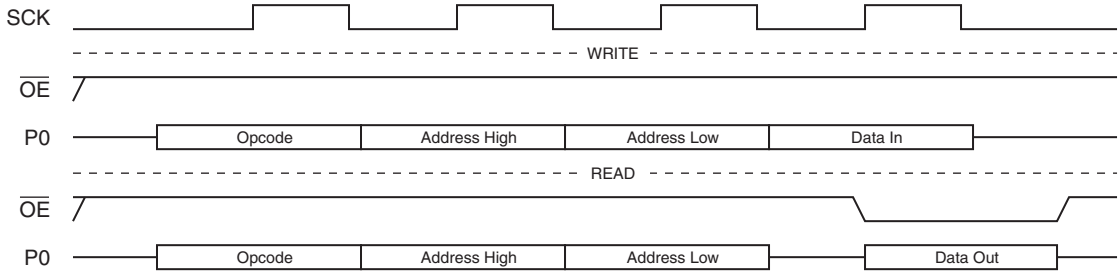

Figure 17-8. ISP Command Packet (Parallel Page)

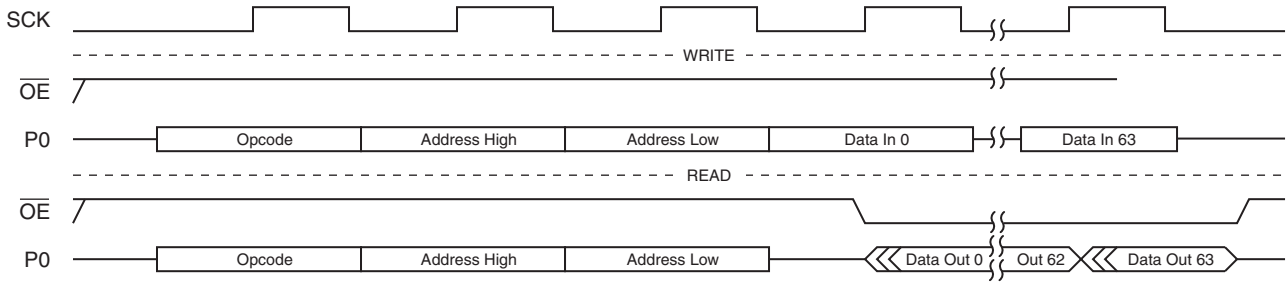

Table 17-2. Programming Command Summary

Command	Opcode	Addr High	Addr Low	Data 0	Data 1–63
Program Enable[1]	1010 1100	0101 0011	xxxx xxxx	xxxx xxxx (0110 1001)[2]	–
Parallel Enable[3]	1010 1100	0011 0101	xxxx xxxx	xxxx xxxx	–
Chip Erase	1010 1100	100x xxxx	xxxx xxxx	xxxx xxxx	–
Read Status	0110 0000	xxxx xxxx	xxxx xxxx	Status Out	–
Write Code Byte	0100 0000	000a aaaa	asbb bbbb	Data In	–
Read Code Byte	0010 0000	000a aaaa	asbb bbbb	Data Out	–
Write Code Page	0101 0000	000a aaaa	as00 0000	Byte 0	Bytes 1–63
Write Code Page with Auto-Erase	0111 0000	000a aaaa	as00 0000	Byte 0	Bytes 1–63
Read Code Page	0011 0000	000a aaaa	as00 0000	Byte 0	Bytes 1–63
Write Data Byte	1100 0000	xxxx xxxx	asbb bbbb	Data In	–
Read Data Byte	1010 0000	xxxx xxxx	asbb bbbb	Data Out	–
Write Data Page	1101 0000	xxxx xxxx	as00 0000	Byte 0	Bytes 1–63
Write Data Page with Auto-Erase	1101 0010	xxxx xxxx	as00 0000	Byte 0	Bytes 1–63
Read Data Page	1011 0000	xxxx xxxx	as00 0000	Byte 0	Bytes 1–63
Write User Fuse[5]	0100 0001	xxxx xxxx	00bb bbbb	Fuse In[4]	–
Read User Fuse[5]	0010 0001	xxxx xxxx	00bb bbbb	Fuse Out[4]	–
Write User Fuses[5]	0101 0001	xxxx xxxx	0000 0000	Fuse 0[4]	Bytes 1–63
Write User Fuses with Auto-Erase[5]	0111 0001	xxxx xxxx	0000 0000	Fuse 0[4]	Fuses 1–63[4]
Read User Fuses[5]	0011 0001	xxxx xxxx	0000 0000	Fuse 0[4]	Fuses 1–63[4]
Write Lock Mode[6]	1010 1100	1110 00BB	xxxx xxxx	xxxx xxxx	–
Read Lock Mode[6]	0010 0100	xxxx xxxx	xxxx xxxx	xxxL LLxx	–
Write Lock Bit[6]	0100 0100	xxxx xxxx	00bb bbbb	Data In[4]	–
Write Lock Bits[6]	0101 0100	xxxx xxxx	0000 0000	Byte 0[4]	Bytes 1–63[4]
Read Lock Bits[6]	0011 0100	xxxx xxxx	0000 0000	Byte 0[4]	Bytes 1–63[4]
Write User Signature Byte	0100 0010	xxxx xxxx	asbb bbbb	Data In	–
Read User Signature Byte	0010 0010	xxxx xxxx	asbb bbbb	Data Out	–
Write User Signature Page	0101 0010	xxxx xxxx	as00 0000	Byte 0	Byte 1–63
Write User Signature Page with Auto-Erase	0111 0010	xxxx xxxx	as00 0000	Byte 0	Byte 1–63
Read User Signature Page	0011 0010	xxxx xxxx	as00 0000	Byte 0	Byte 1–63
Read Atmel Signature Byte[7]	0010 1000	xxxx xxxx	0sbb bbbb	Data Out	–
Read Atmel Signature Page[7]	0011 1000	xxxx xxxx	0s00 0000	Byte 0	Byte 1–63

Notes:
1. Program Enable must be the **first** command issued after entering into programming mode.
2. 0110 1001B is returned on MISO when Program Enable was successful.
3. Parallel Enable switches the interface from serial to parallel format until RST goes inactive.
4. Each byte address selects one fuse or lock bit. Data bytes must be 00h or FFh.
5. See Table 17-5 on page 86 for Fuse definitions.
6. See Table 17-4 on page 86 for Lock Bit definitions.

7. **Atmel Signature Bytes**:

Address:	0000H	0001H	0002H
AT89LP51:	1EH	54H	05H
AT89LP52:	1EH	54H	06H

8. **Symbol Key**:

a: Page Address Bit

s: Half Page Select Bit

b: Byte Address Bit

x: Don't Care Bit

17.4 Status Register

The current state of the memory may be accessed by reading the status register. The status register is shown in Table 17-3.

Table 17-3. Status Register

	–	–	–	–	$\overline{\text{LOAD}}$	SUCCESS	$\overline{\text{WRTINH}}$	$\overline{\text{BUSY}}$
Bit	7	6	5	4	3	2	1	0

Symbol	Function
$\overline{\text{LOAD}}$	Load flag. Cleared low by the load page buffer command and set high by the next memory write. This flag signals that the page buffer was previously loaded with data by the load page buffer command.
SUCCESS	Success flag. Cleared low at the start of a programming cycle and will only be set high if the programming cycle completes without interruption from the brownout detector.
$\overline{\text{WRTINH}}$	Write Inhibit flag. Cleared low by the brownout detector (BOD) whenever programming is inhibited due to V_{DD} falling below the minimum required programming voltage. If a BOD episode occurs during programming, the SUCCESS flag will remain low after the cycle is complete.
$\overline{\text{BUSY}}$	Busy flag. Cleared low whenever the memory is busy programming or if write is currently inhibited.

17.5 $\overline{\text{DATA}}$ Polling

The AT89LP51/52 implements $\overline{\text{DATA}}$ polling to indicate the end of a programming cycle. While the device is busy, any attempted read of the last byte written will return the data byte with the MSB complemented. Once the programming cycle has completed, the true value will be accessible. During Erase the data is assumed to be FFH and $\overline{\text{DATA}}$ polling will return 7FH. When writing multiple bytes in a page, the $\overline{\text{DATA}}$ value will be the last data byte loaded before programming begins, not the written byte with the highest physical address within the page.

17.6 Flash Security

The AT89LP51/52 provides three Lock Bits for Flash Code and Data Memory security. Lock bits can be left unprogrammed (FFh) or programmed (00h) to obtain the protection levels listed in Table 17-4. Lock bits can only be erased (set to FFh) by Chip Erase. Lock bit mode 2 disables programming of all memory spaces, including the User Signature Array and User Configuration Fuses. User fuses must be programmed before enabling Lock bit mode 2 or 3. Lock bit mode 3

implements mode 2 and also blocks reads from the code and data memories; however, reads of the User Signature Array, Atmel Signature Array, and User Configuration Fuses are still allowed.

The Lock Bits will not disable FDATA or IAP programming initiated by the application software.

Table 17-4. Lock Bit Protection Modes

Program Lock Bits (by address)				
Mode	**00h**	**01h**	**02h**	**Protection Mode**
1	FFh	FFh	FFh	No program lock features
2	00h	FFh	FFh	Further programming of the Flash is disabled
3	00h	00h	FFh	Further programming of the Flash is disabled and verify (read) is also disabled
4	00h	00h	00h	Further programming of the Flash is disabled and verify (read) is also disabled; External execution above 4K/8K is disabled

17.7 User Configuration Fuses

The AT89LP51/52 includes 10 user fuses for configuration of the device. Each fuse is accessed at a separate address in the User Fuse Row as listed in Table 17-5. Fuses are cleared by programming 00h to their locations. Programming FFh to a fuse location will cause that fuse to maintain its previous state. To set a fuse (set to FFh) the fuse row must be erased and then reprogrammed using the Fuse Write with Auto-erase command. The default state for all fuses is FFh except for Tristate Ports, which defaults to 00h.

Table 17-5. User Configuration Fuse Definitions

Address	Fuse Name	Description
00 – 01h	Clock Source – CS[0:1][(2)]	Selects source for the system clock: CS1 CS0 Selected Source FFh FFh High Speed Crystal Oscillator (XTAL) FFh 00h Low Speed Crystal Oscillator (XTAL) 00h FFh External Clock on XTAL1 (XCLK) 00h 00h Internal Auxiliary Oscillator (IRC)
02 – 03h	Start-up Time – SUT[0:1]	Selects time-out delay for the POR/BOD/PWD wake-up period: SUT1 SUT0 Selected Time-out 00h 00h 1 ms (XTAL); 16 µs (XCLK/IRC) 00h FFh 2 ms (XTAL); 512 µs (XCLK/IRC) FFh 00h 4 ms (XTAL); 1 ms (XCLK/IRC) FFh FFh 16 ms (XTAL); 4 ms (XCLK/IRC)
04h	Compatibility Mode	FFh: CPU functions in 12-clock Compatibility mode 00h: CPU functions is single-cycle Fast mode
05h	ISP Enable[(3)]	FFh: In-System Programming Enabled 00h: In-System Programming Disabled (Enabled at POR only)
06H	User Signature Programming	FFh: Programming of User Signature Disabled 00h: Programming of User Signature Enabled

Table 17-5. User Configuration Fuse Definitions

Address	Fuse Name	Description
07H	Tristate Ports	FFh: I/O Ports start in input-only mode (tristated) after reset 00h: I/O Ports start in quasi-bidirectional mode after reset
08H	In-Application Programming	FFh: In-Application Programming Disabled 00h: In-Application Programming Enabled
09H	R1 Enable	FFh: 5 MΩ resistor on XTAL1 Disabled 00h: 5 MΩ resistor on XTAL1 Enabled

Notes: 1. The default state for Tristate Ports is 00h. All other fuses default to FFh.
2. Changes to these fuses will only take effect after a device POR.
3. Changes to these fuses will only take effect after the ISP session terminates by bringing RST inactive.

17.8 User Signature

The User Signature Array contains 256 bytes of non-volatile memory in two 128-byte pages. The User Signature is available for serial numbers, firmware revision information, date codes or other user parameters. The User Signature Array may only be written by an external device when the User Signature Programming Fuse is enabled. When the fuse is enabled, Chip Erase will also erase the first page of the array. When the fuse is disabled, the array is not affected by write or erase commands. Programming of the Signature Array can also be disabled by the Lock Bits. However, reading the signature is always allowed and the array should not be used to store security sensitive information. The User Signature Array may be modified during execution through the In-Application Programming interface, regardless of the state of the User Signature Programming fuse or Lock Bits, provided that the IAP Fuse is enabled. Note that the address of the User Signature Array, as seen by the IAP interface, equals the User Signature address plus 256 (0100H–01FFH instead of 0000H–00FFH).

17.9 Programming Interface Timing

This section details general system timing sequences and constraints for entering or exiting In-System Programming as well as parameters related to the Serial Peripheral Interface during ISP. The general timing parameters for the following waveform figures are listed in section "Timing Parameters" on page 91.

17.9.1 Power-up Sequence

Execute this sequence to enter programming mode immediately after power-up. In the RST pin is disabled or if the ISP Fuse is disabled, this is the only method to enter programming (see "External Reset" on page 33).

1. Apply power between VDD and GND pins. RST should remain low.
2. Wait at least t_{PWRUP} and drive RST high if active-high otherwise keep low.
3. Wait at least t_{SUT} for the internal Power-on Reset to complete. The value of t_{SUT} will depend on the current settings of the device.
4. Start programming session.

Figure 17-9. Serial Programming Power-up Sequence

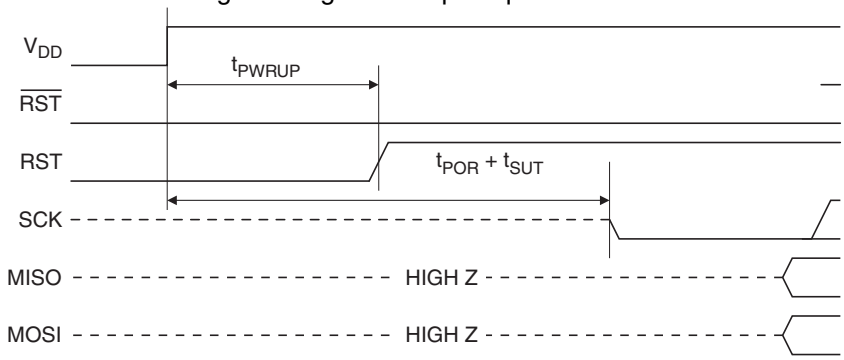

17.9.2 Power-down Sequence

Execute this sequence to power-down the device **after** programming.

1. Drive SCK low.
2. Wait at least t_{SSD} and Tristate MOSI.
3. Wait at least t_{RHZ} and drive RST low.
4. Wait at least t_{SSZ} and tristate SCK.
5. Wait no more than t_{PWRDN} and power off VDD.

Figure 17-10. Serial Programming Power-down Sequence

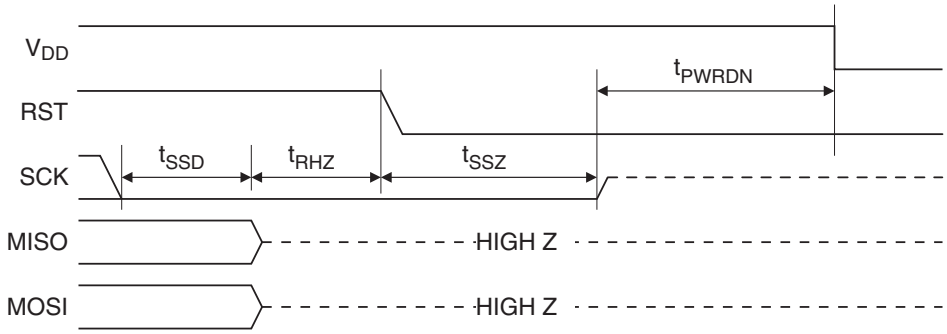

17.9.3 ISP Start Sequence

Execute this sequence to exit CPU execution mode and enter ISP mode when the device has passed Power-On Reset and is already operational.

1. Drive RST high.
2. Wait $t_{RLZ} + t_{STL}$.
3. Drive SCK low.
4. Start programming session.

Figure 17-11. In-System Programming (ISP) Start Sequence

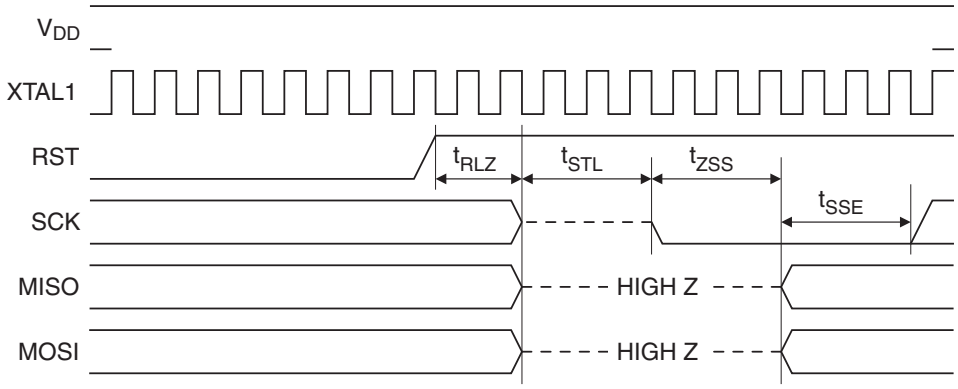

17.9.4 ISP Exit Sequence

Execute this sequence to exit ISP mode and resume CPU execution mode.

1. Drive SCK low.
1. Wait at least t_{SSD}.
2. Tristate MOSI.
3. Wait at least t_{RHZ} and bring RST low.
4. Wait t_{SSZ} and tristate SCK.

Figure 17-12. In-System Programming (ISP) Exit Sequence

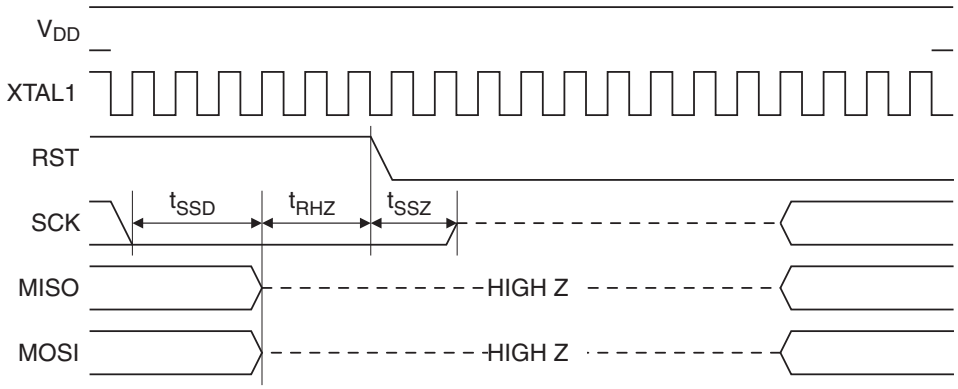

Note: The waveforms on this page are not to scale.

17.9.5 Serial Peripheral Interface

The Serial Peripheral Interface (SPI) is a byte-oriented full-duplex synchronous serial communication channel. During In-System Programming, the programmer always acts as the SPI master and the target device always acts as the SPI slave. The target device receives serial data on MOSI and outputs serial data on MISO. The Programming Interface implements a standard SPI Port with a fixed data order and For In-System Programming, bytes are transferred MSB first as shown in Figure 17-13. The SCK phase and polarity follow SPI clock mode 0 (CPOL = 0, CPHA = 0) where bits are sampled on the rising edge of SCK and output on the falling edge of SCK. For more detailed timing information see Figure 17-14.

Figure 17-13. ISP Byte Sequence

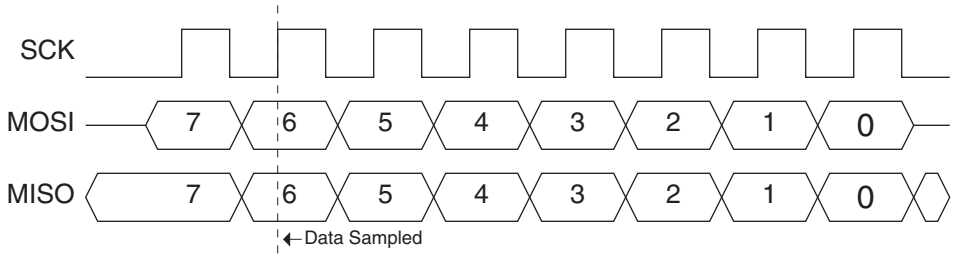

Figure 17-14. Serial Programming Interface Timing

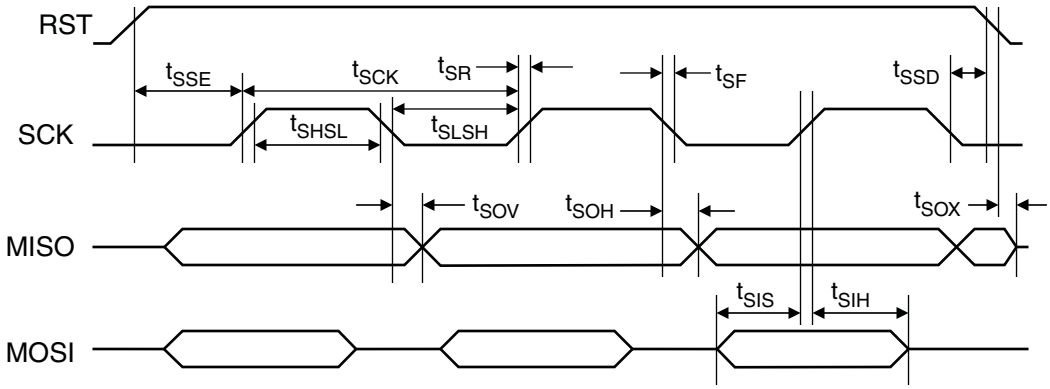

Figure 17-15. Parallel Programming Interface Timing

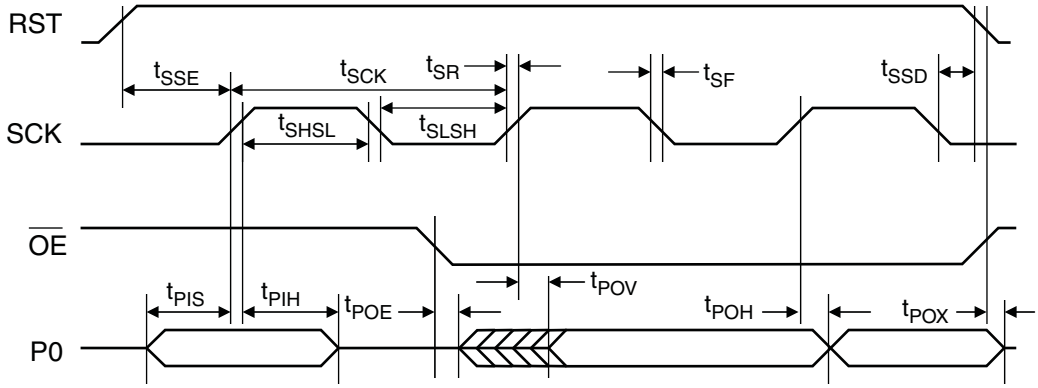

17.9.6 Timing Parameters

The timing parameters for Figure 17-9, Figure 17-10, Figure 17-11, Figure 17-12, Figure 17-14 and Figure 17-15 are shown in Table .

Table 17-6. Programming Interface Timing Parameters

Symbol	Parameter	Min	Max	Units
t_{CLCL}	System Clock Cycle Time	0	60	ns
t_{PWRUP}	Power On to $\overline{SS}$ High Time	10		µs
t_{POR}	Power-on Reset Time		100	µs
t_{PWRDN}	$\overline{SS}$ Tristate to Power Off		1	µs
t_{RLZ}	RST Low to I/O Tristate	t_{CLCL}	2 t_{CLCL}	ns
t_{STL}	RST Low Settling Time	100		ns
t_{RHZ}	RST High to $\overline{SS}$ Tristate	0	2 t_{CLCL}	ns
t_{SCK}	Serial Clock Cycle Time	200[1]		ns
t_{SHSL}	Clock High Time	75		ns
t_{SLSH}	Clock Low Time	50		ns
t_{SR}	Rise Time		25	ns
t_{SF}	Fall Time		25	ns
t_{SIS}	Serial Input Setup Time	10		ns
t_{SIH}	Serial Input Hold Time	10		ns
t_{SOH}	Serial Output Hold Time		10	ns
t_{SOV}	Serial Output Valid Time		35	ns
t_{PIS}	Parallel Input Setup Time	10		ns
t_{PIH}	Parallel Input Hold Time	10		ns
t_{POH}	Parallel Output Hold Time		10	ns
t_{POV}	Parallel Output Valid Time		35	ns
t_{SOE}	Serial Output Enable Time		10	ns
t_{SOX}	Serial Output Disable Time		25	ns
t_{POE}	Parallel Output Enable Time		10	ns
t_{POX}	Parallel Output Disable Time		25	ns
t_{SSE}	RST Active Lead Time	t_{SLSH}		ns
t_{SSD}	RST Inactive Lag Time	t_{SLSH}		ns
t_{ZSS}	SCK Setup to $\overline{SS}$ Low	25		ns
t_{SSZ}	SCK Hold after $\overline{SS}$ High	25		ns
t_{WR}	Write Cycle Time	2.5		ms
t_{AWR}	Write Cycle with Auto-Erase Time	5		ms
t_{ERS}	Chip Erase Cycle Time	7.5		ms

Note: 1. t_{SCK} is independent of t_{CLCL}.

18. Electrical Characteristics

18.1 Absolute Maximum Ratings*

Operating Temperature	-40°C to +85°C
Storage Temperature	-65°C to +150°C
Voltage on Any Pin with Respect to Ground	-0.7V to +5.5V
Maximum Operating Voltage	5.5V
Total DC Output Current	150.0 mA

*NOTICE: Stresses beyond those listed under "Absolute Maximum Ratings" may cause permanent damage to the device. This is a stress rating only and functional operation of the device at these or any other conditions beyond those indicated in the operational sections of this specification is not implied. Exposure to absolute maximum rating conditions for extended periods may affect device reliability.

18.2 DC Characteristics

T_A = -40°C to 85°C, V_{DD} = 2.4V to 5.5V (unless otherwise noted)

Symbol	Parameter	Condition	Min	Max	Units
V_{IL}	Input Low-voltage		-0.5	min(0.25V_{DD}, 0.8[3])	V
V_{IH}	Input High-voltage		min(0.7V_{DD}, 2.4[3])	V_{DD} + 0.5	V
V_{OL}	Output Low-voltage[1]	I_{OL} = 8 mA, V_{DD} = 5V ±10%		0.5	V
		I_{OL} = 4 mA, V_{DD} = 2.4V			
V_{OH}	Output High-voltage With Weak Pull-ups Enabled	I_{OH} = -60 µA, V_{DD} = 5V ±10%	2.4		V
		I_{OH} = -25 µA	0.7 V_{DD}		V
		I_{OH} = -10 µA	0.85 V_{DD}		V
V_{OH1}	Output High-voltage With Strong Pull-ups Enabled	I_{OH} = -7 mA, V_{DD} = 5V ±10%	0.9 V_{DD}		
		I_{OH} = -2.5 mA, V_{DD} = 2.4V			
		I_{OH} = -10 mA, V_{DD} = 5V ±10%	0.75 V_{DD}		
		I_{OH} = -6 mA, V_{DD} = 2.4V			
I_{IL}	Logic 0 Input Current	V_{IN} = 0.45V		-50	µA
I_{TL}	Logic 1 to 0 Transition Current	V_{IN} = 2V, V_{DD} = 5V ±10%		-200	µA
I_{LI}	Input Leakage Current	0 < V_{IN} < V_{DD}		±10	µA
C_{IO}	Pin Capacitance	Test Freq. = 1 MHz, T_A = 25°C		10	pF
I_{CC}	Power Supply Current (Fast Mode)	Active Mode, 12 MHz, V_{DD} = 5V		10	mA
		Idle Mode, 12 MHz, V_{DD} = 5V		3	mA
	Power Supply Current (Compatibility Mode)	Active Mode, 12 MHz, V_{DD} = 5V		4	mA
		Idle Mode, 12 MHz, V_{DD} = 5V		2	mA
	Power-down Mode[2]	V_{DD} = 5V		5	µA
		V_{DD} = 3V		2	µA

Notes: 1. Under steady state (non-transient) conditions, I_{OL} must be externally limited as follows:
Maximum I_{OL} per port pin: 10 mA
Maximum total I_{OL} for all output pins: 100 mA
If I_{OL} exceeds the test condition, V_{OL} may exceed the related specification. Pins are not guaranteed to sink current greater than the listed test conditions.

2. Minimum V_{DD} for Power-down is 2V.
3. Inputs are TTL-compatible when V_{DD} is 5V ± 10%

18.3 Typical Characteristics

The following charts show typical behavior. These figures are not tested during manufacturing. All current consumption measurements are performed with all I/O pins configured as quasi-bidirectional (with internal pull-ups). A square wave generator with rail-to-rail output is used as an external clock source for consumption versus frequency measurements.

18.3.1 Supply Current (Internal Oscillator)

Figure 18-1. Active Supply Current vs. Vcc (1.8432 MHz Internal Oscillator)

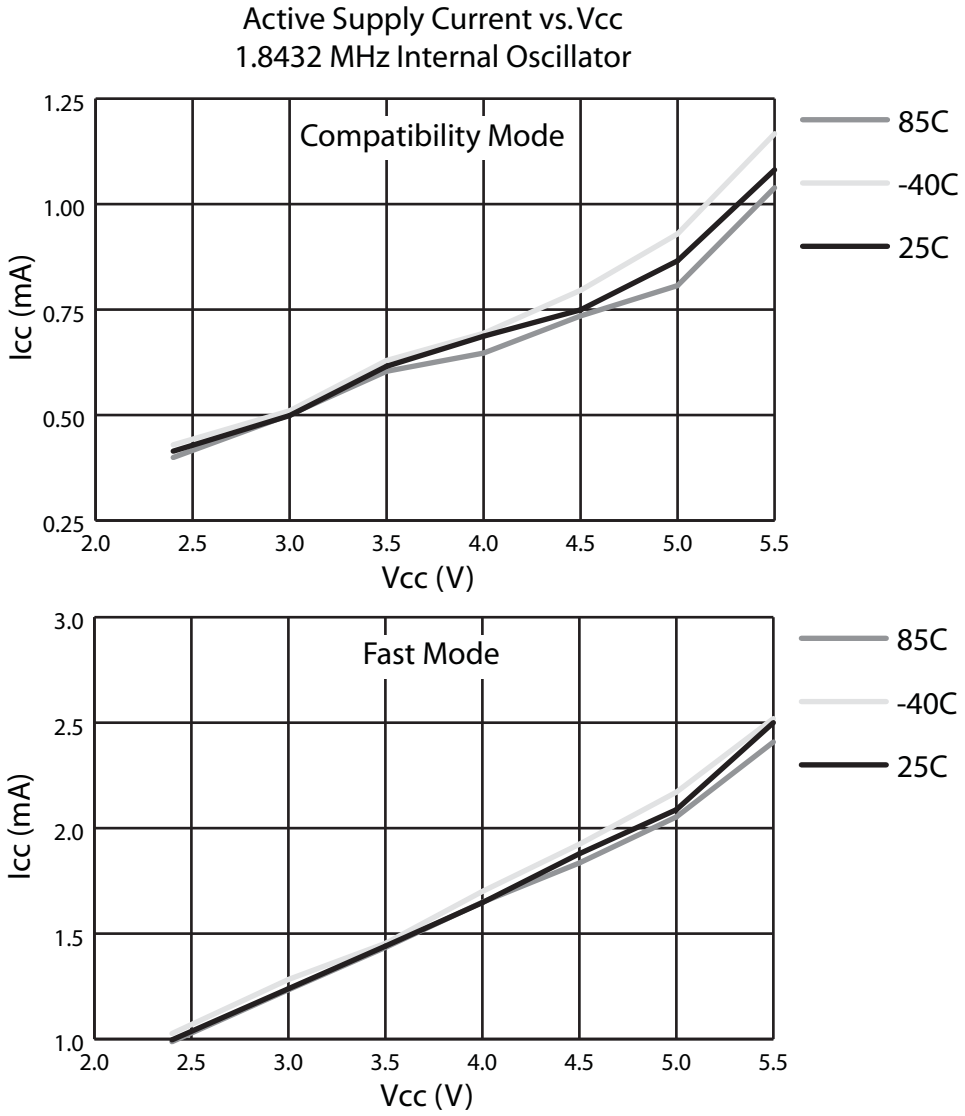

Figure 18-2. Idle Supply Current vs. Vcc (1.8432 MHz Internal Oscillator)

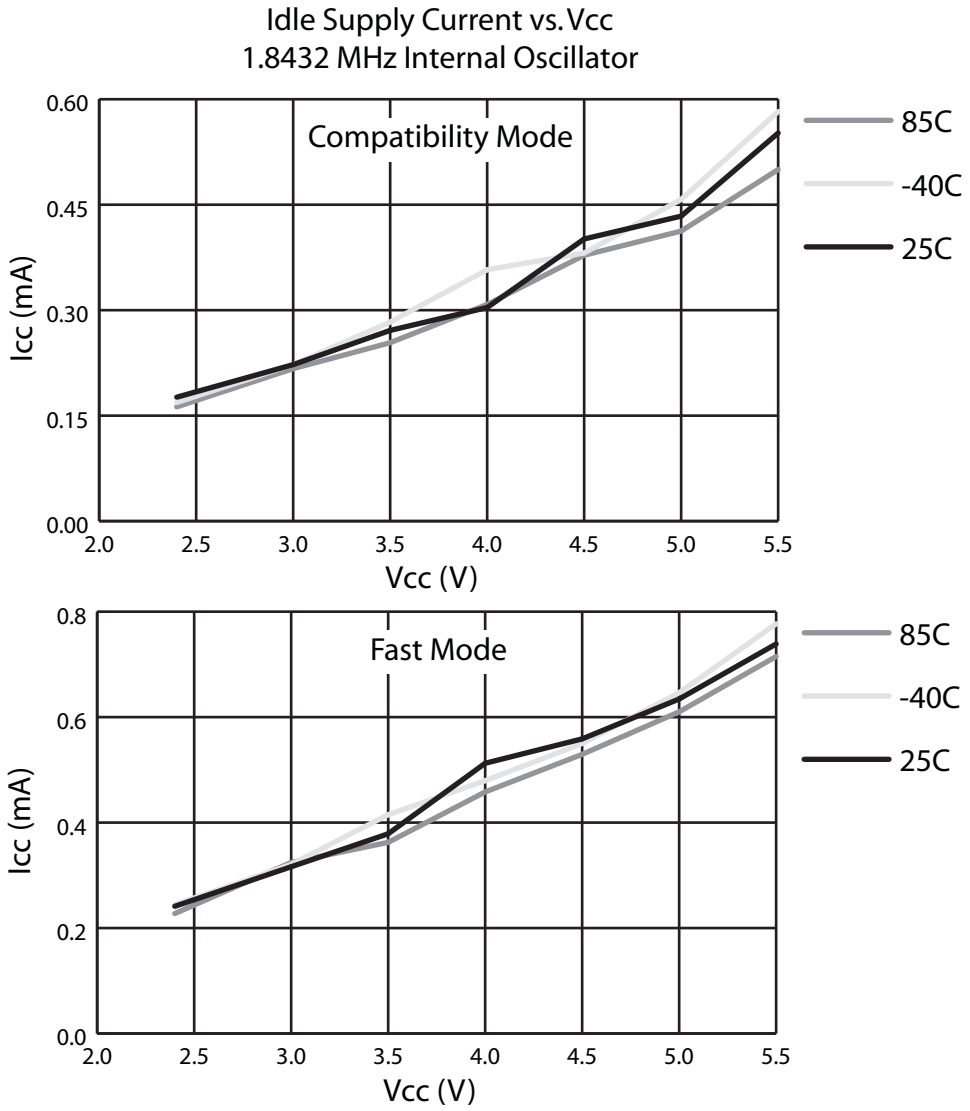

18.3.2 Supply Current (External Clock)

Figure 18-3. Active Supply Current vs. Frequency

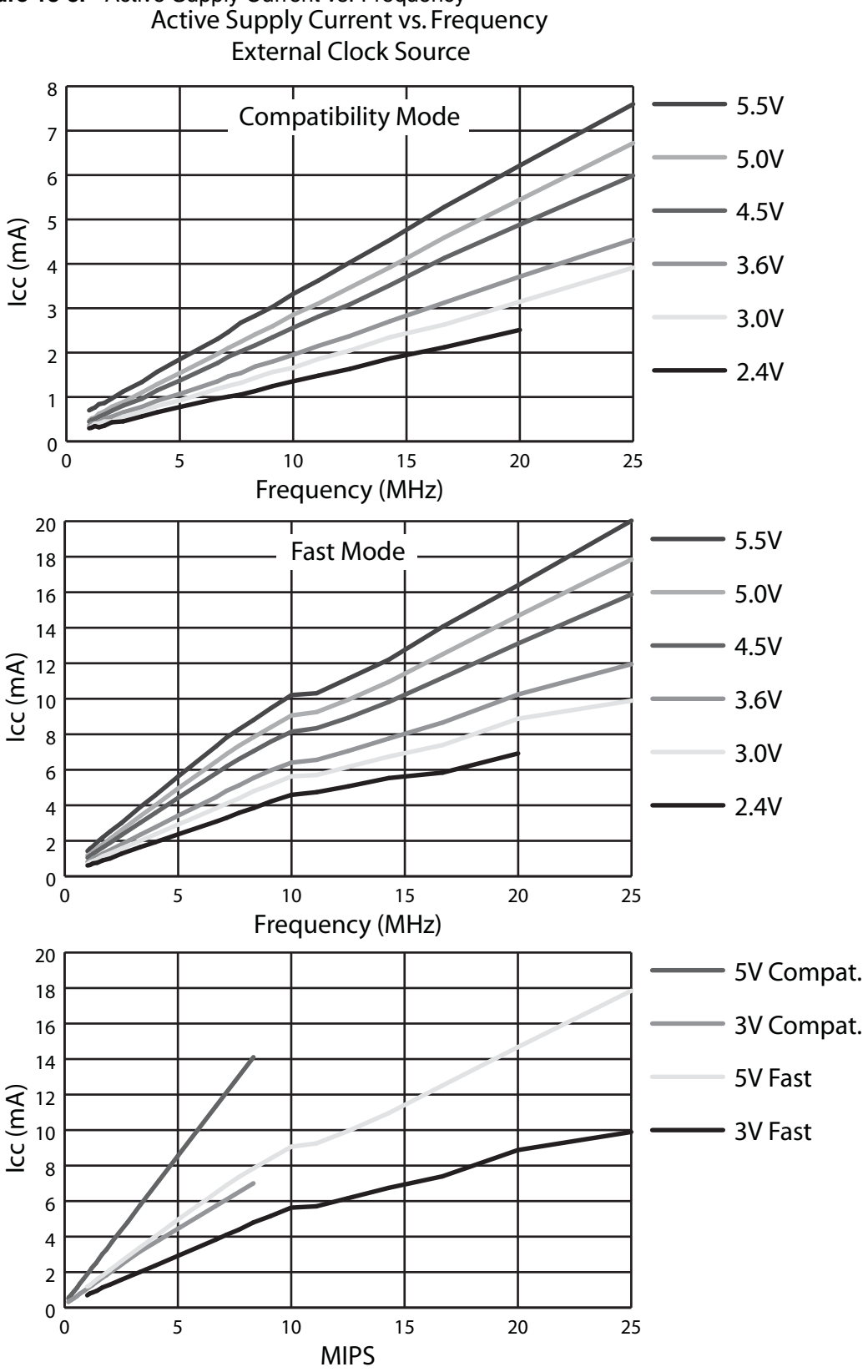

Figure 18-4. Idle Supply Current vs. Frequency

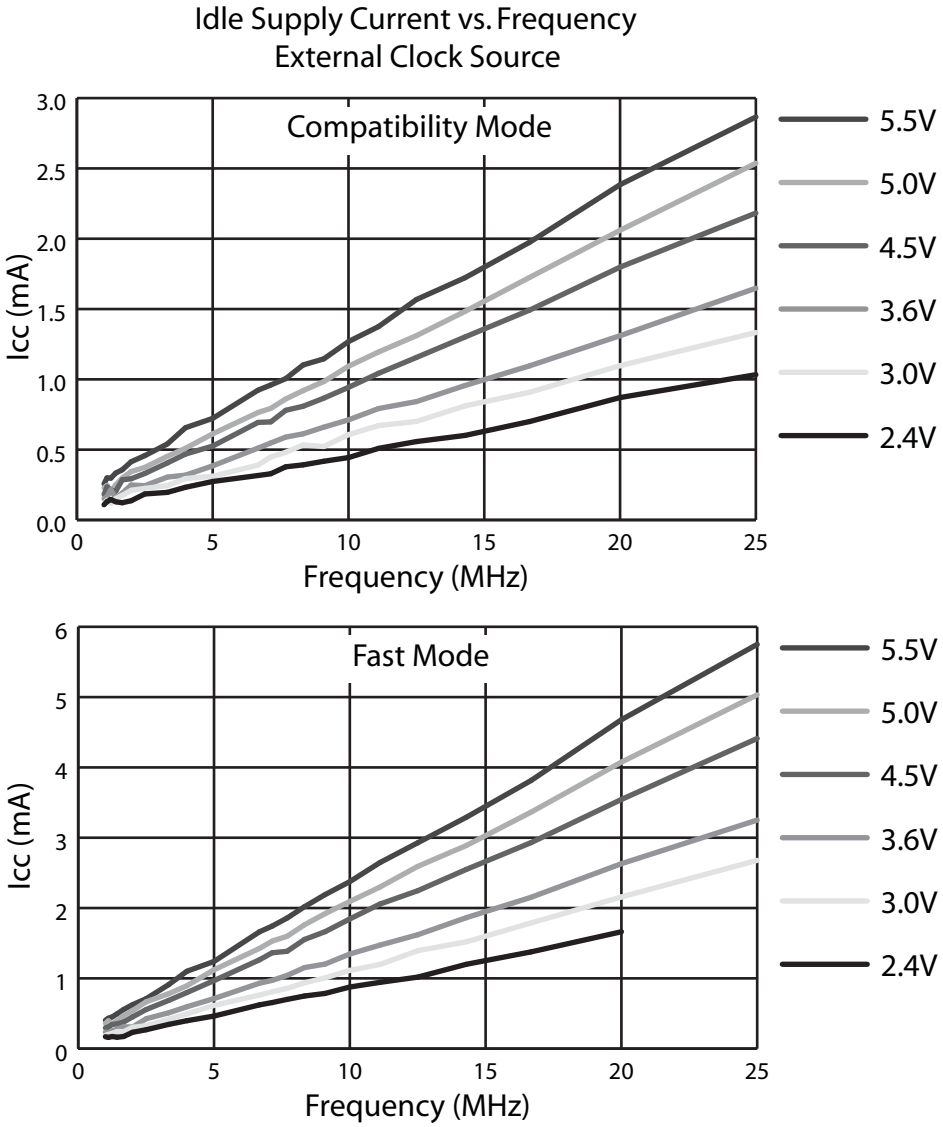

18.3.3 Quasi-Bidirectional Input

Figure 18-5. Quasi-bidirectional Input Transition Current at 5V

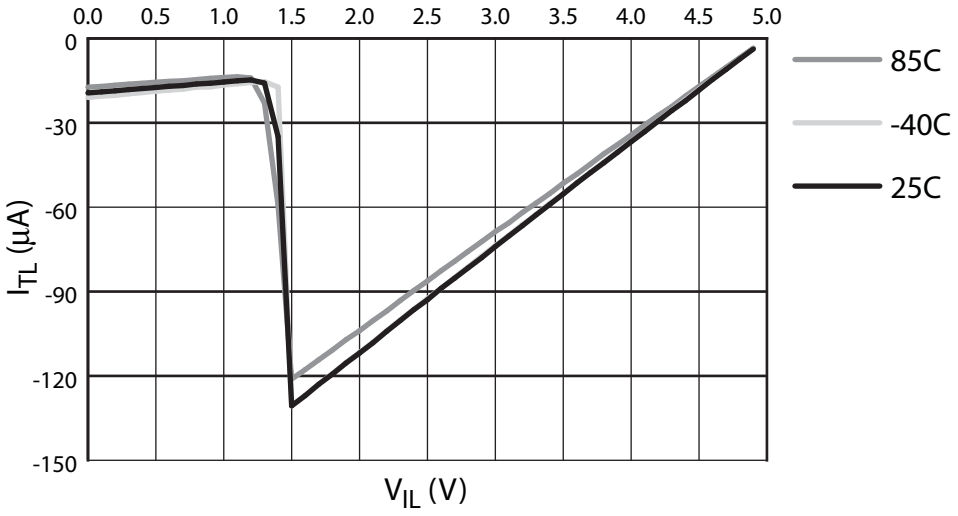

Figure 18-6. Quasi-bidirectional Input Transition Current at 3V

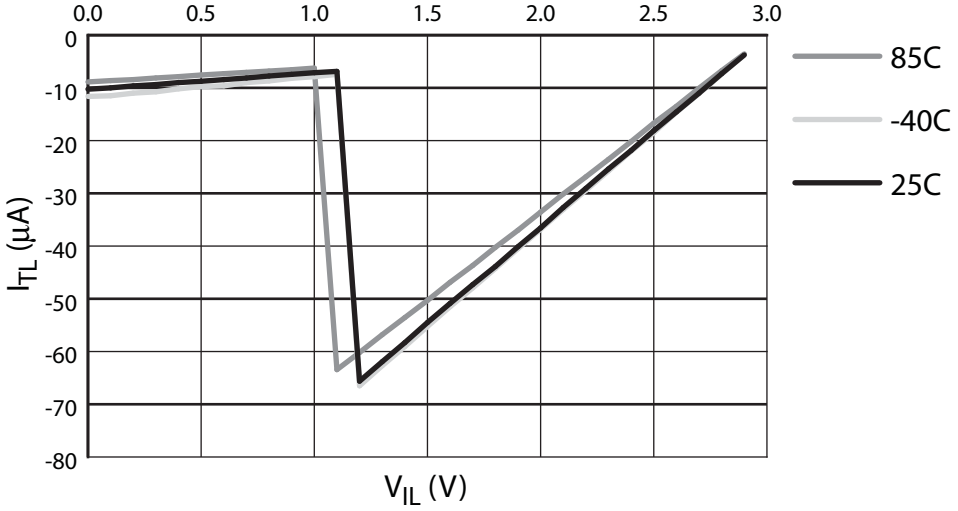

18.3.4 Quasi-Bidirectional Output

Figure 18-7. Quasi-Bidirectional Output I-V Source Characteristic at 5V

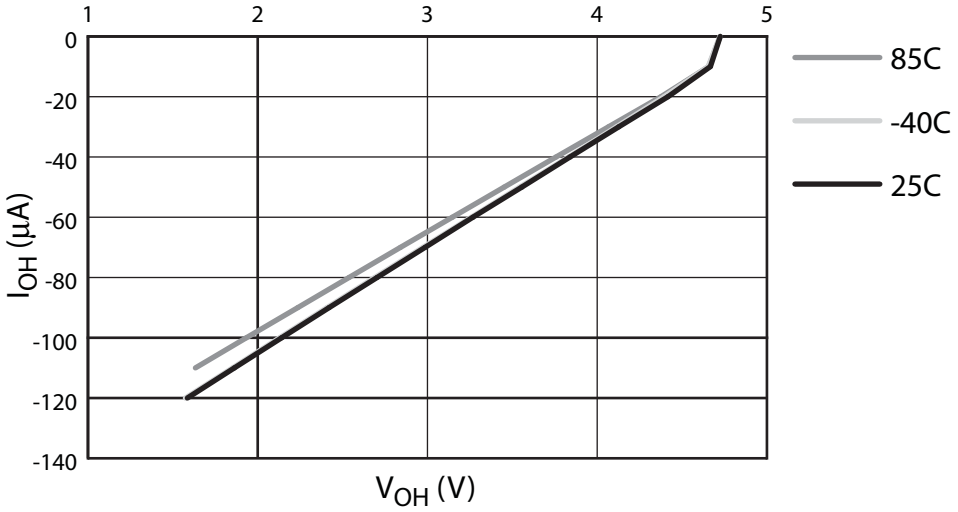

Figure 18-8. Quasi-Bidirectional Output I-V Source Characteristic at 3V

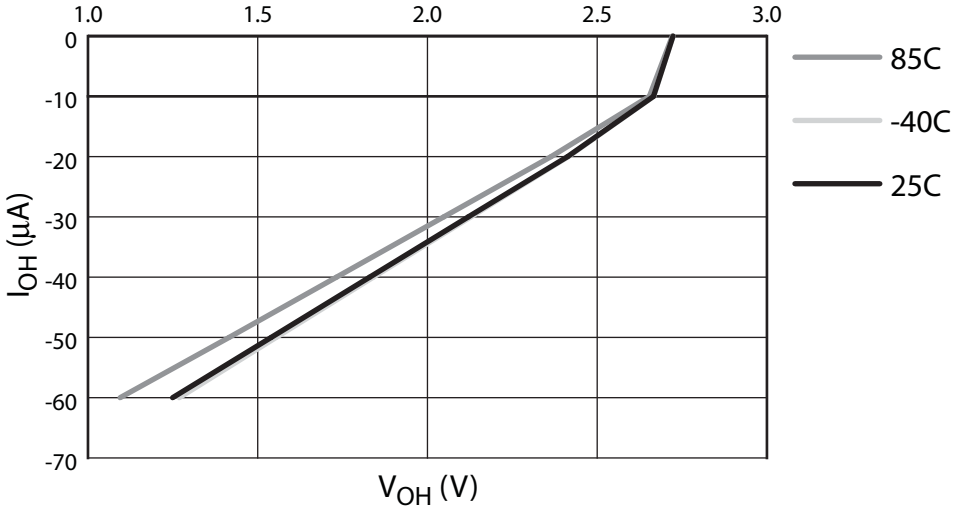

18.3.5 Push-Pull Output

Figure 18-9. Push-Pull Output I-V Source Characteristic at 5V

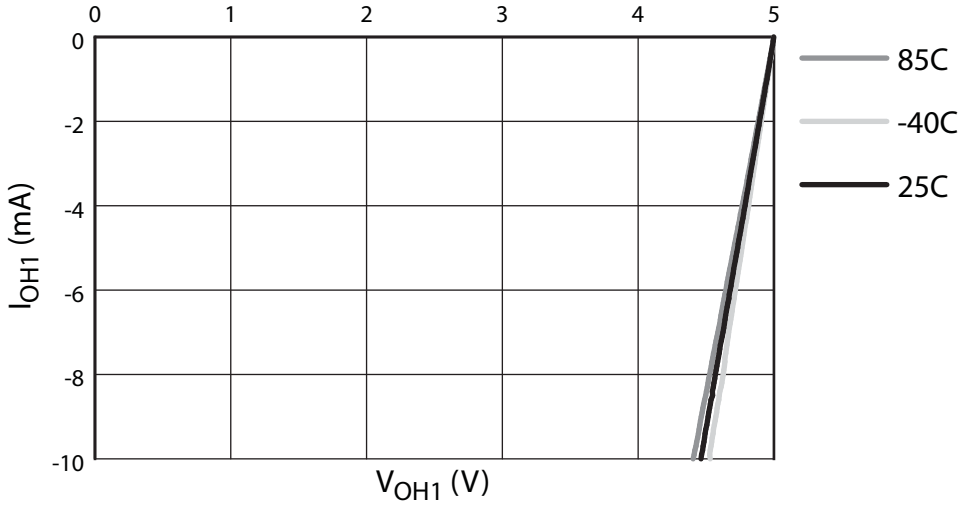

Figure 18-10. Push-Pull Output I-V Source Characteristic at 3V

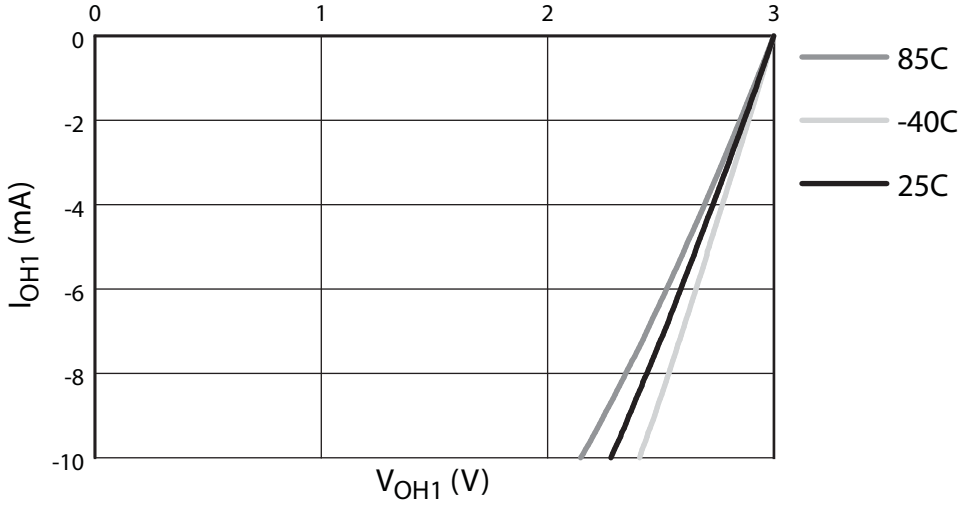

Figure 18-11. Push-Pull Output I-V Sink Characteristic at 5V

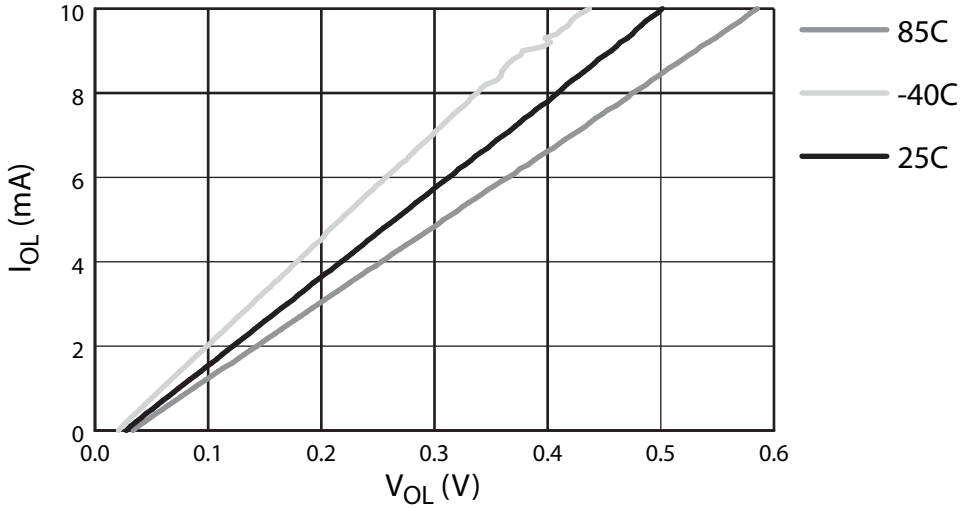

Figure 18-12. Push-Pull Output I-V Sink Characteristic at 3V

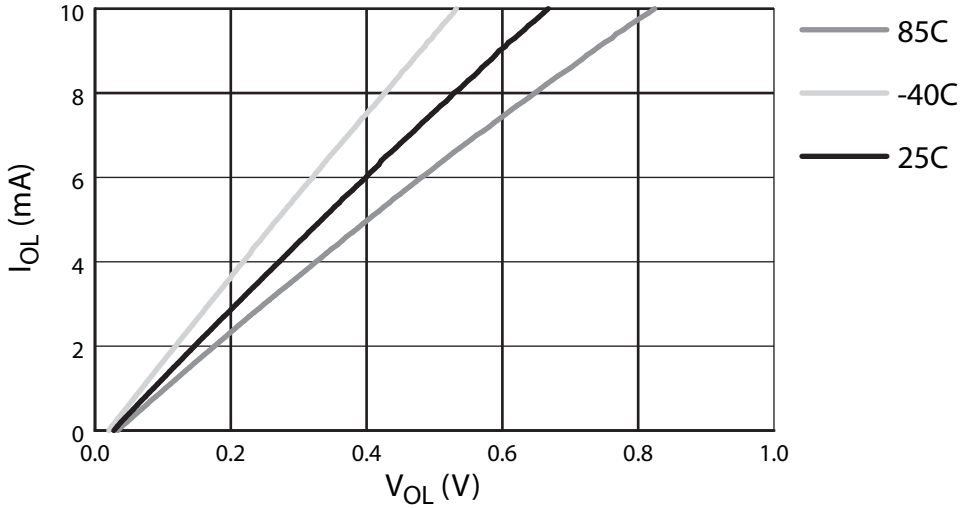

Note: The I_{OL}/V_{OL} characteristic applies to Push-Pull, Quasi-Bidirectional and Open-Drain modes.

18.4 Clock Characteristics

The values shown in this table are valid for T_A = -40°C to 85°C and V_{DD} = 2.4 to 5.5V, unless otherwise noted.

Figure 18-13. External Clock Drive Waveform

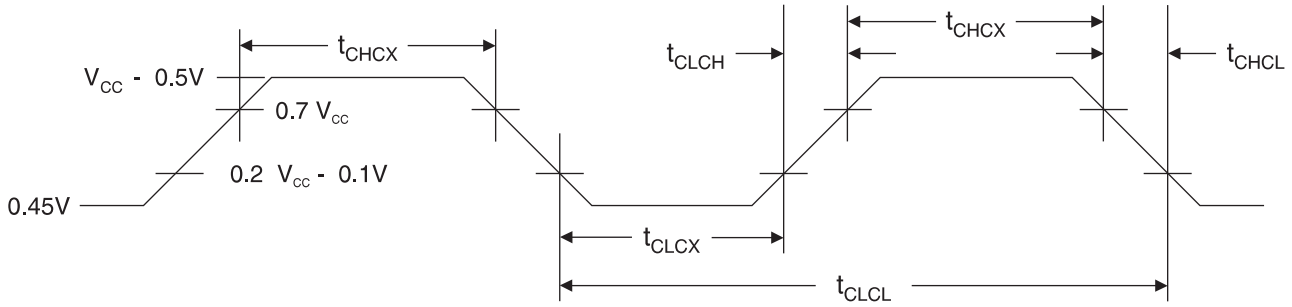

Table 18-1. External Clock Parameters

Symbol	Parameter	V_{DD} = 2.4V to 5.5V		V_{DD} = 4.5V to 5.5V		Units
		Min	Max	Min	Max	
$1/t_{CLCL}$	Oscillator Frequency[1]	0	20	0	25	MHz
t_{CLCL}	Clock Period	50		40		ns
t_{CHCX}	External Clock High Time	15		12		ns
t_{CLCX}	External Clock Low Time	15		12		ns
t_{CLCH}	External Clock Rise Time		5		5	ns
t_{CHCL}	External Clock Fall Time		5		5	ns

Note: 1. No wait state (single-cycle) fetch speed for Fast Mode

Table 18-2. Clock Characteristics

Symbol	Parameter	Condition	Min	Max	Units
f_{XTAL}	Crystal Oscillator Frequency	Low Power Oscillator	0	12	MHz
		High Power Oscillator	0	24	MHz
f_{RC}	Internal Oscillator Frequency	T_A = 25°C; V_{DD} = 5.0V	1.824	1.862	MHz
		V_{DD} = 2.4 to 5.5V	1.751	1.935	MHz

18.5 Reset Characteristics

The values shown in this table are valid for T_A = -40°C to 85°C and V_{DD} = 2.4 to 5.5V, unless otherwise noted.

Table 18-3. Reset Characteristics

Symbol	Parameter	Condition	Min	Max	Units
R_{RST}	Reset Pull-up Resistor		150	300	kΩ
	Reset Pull-down Resistor		100	200	kΩ
V_{POR}	Power-On Reset Threshold		1.3	1.6	V
V_{BOD}	Brown-Out Detector Threshold		1.9	2.2	V
V_{BH}	Brown-Out Detector Hysteresis		200	300	mV
t_{POR}	Power-On Reset Delay		135	150	µs
t_{WDTRST}	Watchdog Reset Pulse Width		$49t_{CLCL}$		ns

18.6 External Memory Characteristics

The values shown in this table are valid for T_A = -40°C to 85°C and V_{DD} = 2.4 to 5.5V, unless otherwise noted. Under operating conditions, load capacitance for Port 0, ALE and $\overline{PSEN}$ = 100 pF; load capacitance for all other outputs = 80 pF. Parameters refer to Figure 18-14, Figure 18-15 and Figure 18-16.

Table 18-4. External Program and Data Memory Characteristics

Symbol	Parameter	Compatibility Mode[1]		Fast Mode[1]		Units
		Min	Max	Min	Max	
$1/t_{CLCL}$	System Frequency[6]	0	24	0	24	MHz
t_{LHLL}	ALE Pulse Width	t_{CLCL} - 10		t_{CLCL} - 10 [4]		ns
t_{AVLL}	Address Valid to ALE Low	$0.5t_{CLCL}$ - 20 [2]		$0.5t_{CLCL}$ - 20 [2]		ns
t_{LLAX}	Address Hold after ALE Low	$0.5t_{CLCL}$ - 20 [3]		$0.5t_{CLCL}$ - 20 [3]		ns
t_{LLIV}	ALE Low to Valid Instruction In		$2t_{CLCL}$ - 30		$2t_{CLCL}$ - 30	ns
t_{LLPL}	ALE Low to $\overline{PSEN}$ Low	$0.5t_{CLCL}$ - 20 [2]		$0.5t_{CLCL}$ - 20 [2]		ns
t_{PLPH}	$\overline{PSEN}$ Pulse WIdth	$1.5t_{CLCL}$ - 10 [2]		$1.5t_{CLCL}$ - 10 [2]		ns
t_{PLIV}	$\overline{PSEN}$ Low to Valid Instruction In		$1.5t_{CLCL}$ - 30 [2]		$1.5t_{CLCL}$ - 30 [2]	ns
t_{PXIX}	Input Instruction Hold after $\overline{PSEN}$	0		0		ns
t_{PXIZ}	Input Instruction Float after $\overline{PSEN}$		$0.5t_{CLCL}$ - 20 [2]		$0.5t_{CLCL}$ - 20 [2]	ns
t_{PXAV}	$\overline{PSEN}$ to Address Valid	$0.5t_{CLCL}$ - 20 [2]		$0.5t_{CLCL}$ - 20 [2]		ns
t_{AVIV}	Address to Valid Instruction In		$2.5t_{CLCL}$ - 30 [2]		$2.5t_{CLCL}$ - 30 [2]	ns
t_{PLAZ}	$\overline{PSEN}$ Low to Address Float		10		10	ns
t_{RLRH}	$\overline{RD}$ Pulse Width[5]	$3t_{CLCL}$ - 10		t_{CLCL} - 10		ns
t_{WLWH}	$\overline{WR}$ Pulse Width[5]	$3t_{CLCL}$ - 10		t_{CLCL} - 10		ns
t_{RLDV}	$\overline{RD}$ Low to Valid Data In		$2.5t_{CLCL}$ - 30		t_{CLCL} - 30	ns
t_{RHDX}	Data Hold after $\overline{RD}$	0		0		ns
t_{RHDZ}	Data Float after $\overline{RD}$		t_{CLCL} - 20		t_{CLCL} - 20	ns
t_{LLDV}	ALE Low to Valid Data In		$4t_{CLCL}$ - 30		$2t_{CLCL}$ - 30	ns
t_{AVDV}	Address to Valid Data In		$4.5t_{CLCL}$ - 30 [2]		$2.5t_{CLCL}$ - 30 [2]	ns
t_{LLWL}	ALE Low to $\overline{RD}$ or $\overline{WR}$ Low	$1.5t_{CLCL}$ - 20	$1.5t_{CLCL}$ + 20	t_{CLCL} - 20	t_{CLCL} + 20	ns
t_{AVWL}	Address to $\overline{RD}$ or $\overline{WR}$ Low	$2t_{CLCL}$ - 20 [2]		$1.5t_{CLCL}$ - 20 [2]		ns
t_{QVWX}	Data Valid to $\overline{WR}$ Transition	$1t_{CLCL}$ - 20 [2]		$0.5t_{CLCL}$ - 20 [2]		ns
t_{QVWH}	Data Valid to $\overline{WR}$ High	$4t_{CLCL}$ - 20 [2]		$1.5t_{CLCL}$ - 20 [2]		ns
t_{WHQX}	Data Hold after $\overline{WR}$	$1t_{CLCL}$ - 20 [3]		$0.5t_{CLCL}$ - 20 [3]		ns
t_{RLAZ}	$\overline{RD}$ Low to Address Float		$-1t_{CLCL}$ + 20 [2]		$-0.5t_{CLCL}$ + 20 [2]	ns
t_{WHAX}	Address Hold after $\overline{RD}$ or $\overline{WR}$ High	$1t_{CLCL}$ - 20 [3]		$0.5t_{CLCL}$ - 20 [3]		ns
t_{WHLH}	$\overline{RD}$ or $\overline{WR}$ High to ALE High	$0.5t_{CLCL}$ - 20	$0.5t_{CLCL}$ + 20	t_{CLCL} - 20		ns

Notes:
1. Compatibility Mode timing for MOVX also applies to Fast Mode during exeternal execution of MOVX.
2. This assumes 50% clock duty cycle. The half period depends on the clock high value t_{CHCX} (high duty cycle).
3. This assumes 50% clock duty cycle. The half period depends on the clock low value t_{CLCX} (low duty cycle).
4. In some cases parameter t_{LHLL} may have a minimum of $0.5t_{CLCL}$ during Fast mode external execution with DISALE = 0.
5. The strobe pulse width may be lengthened by 1, 2 or 3 additional t_{CLCL} using wait states.
6. t_{CLCL} is the internal system clock period. By default in Compatibility Mode, t_{CLCL} = 2 t_{OSC}

Figure 18-14. External Program Memory Read Cycle

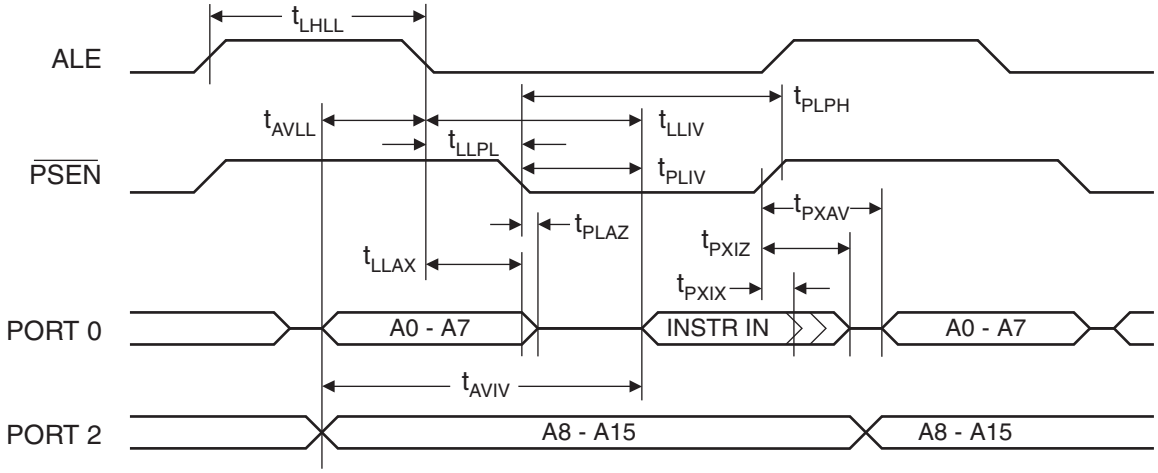

Figure 18-15. External Data Memory Read Cycle

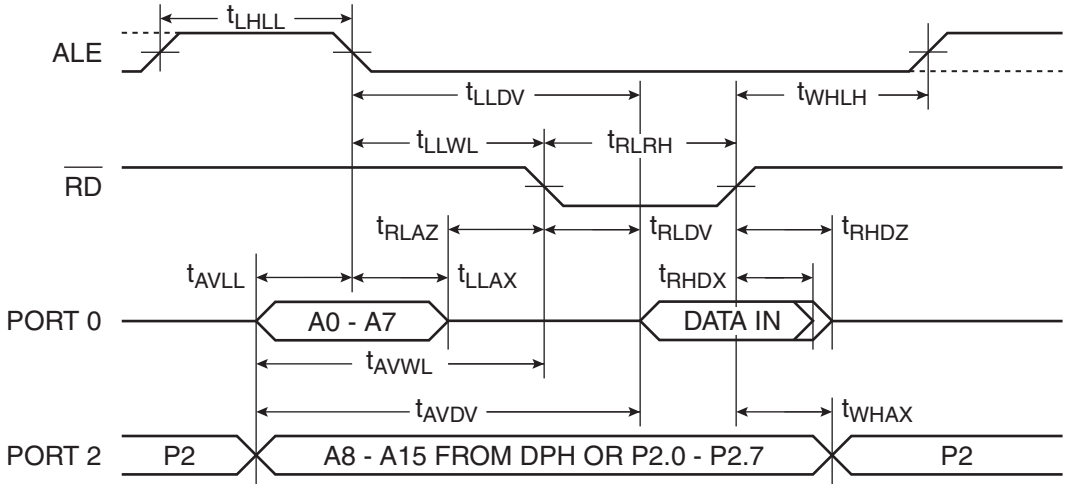

Figure 18-16. External Data Memory Write Cycle

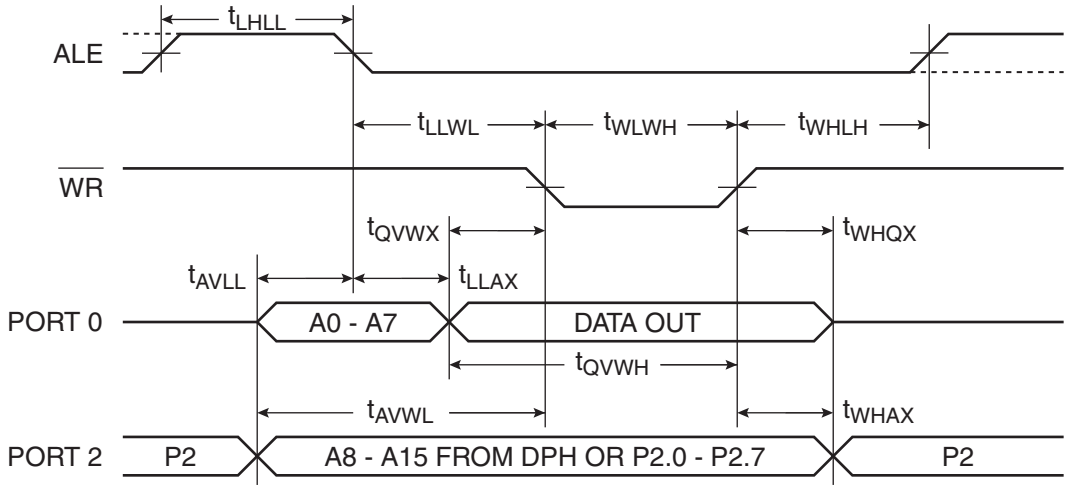

18.7 Serial Port Timing: Shift Register Mode

The values in this table are valid for V_{DD} = 2.4V to 5.5V and Load Capacitance = 80 pF.

Symbol	Parameter	SMOD1 = 0		SMOD1 = 1		Units
		Min	Max	Min	Max	
t_{XLXL}	Serial Port Clock Cycle Time	$4t_{CLCL}$ -15		$2t_{CLCL}$ -15		µs
t_{QVXH}	Output Data Setup to Clock Rising Edge	$3t_{CLCL}$ -15		t_{CLCL} -15		ns
t_{XHQX}	Output Data Hold after Clock Rising Edge	t_{CLCL} -15		t_{CLCL} -15		ns
t_{XHDX}	Input Data Hold after Clock Rising Edge	0		0		ns
t_{XHDV}	Input Data Valid to Clock Rising Edge	15		15		ns

Figure 18-17. Shift Register Mode Timing Waveform

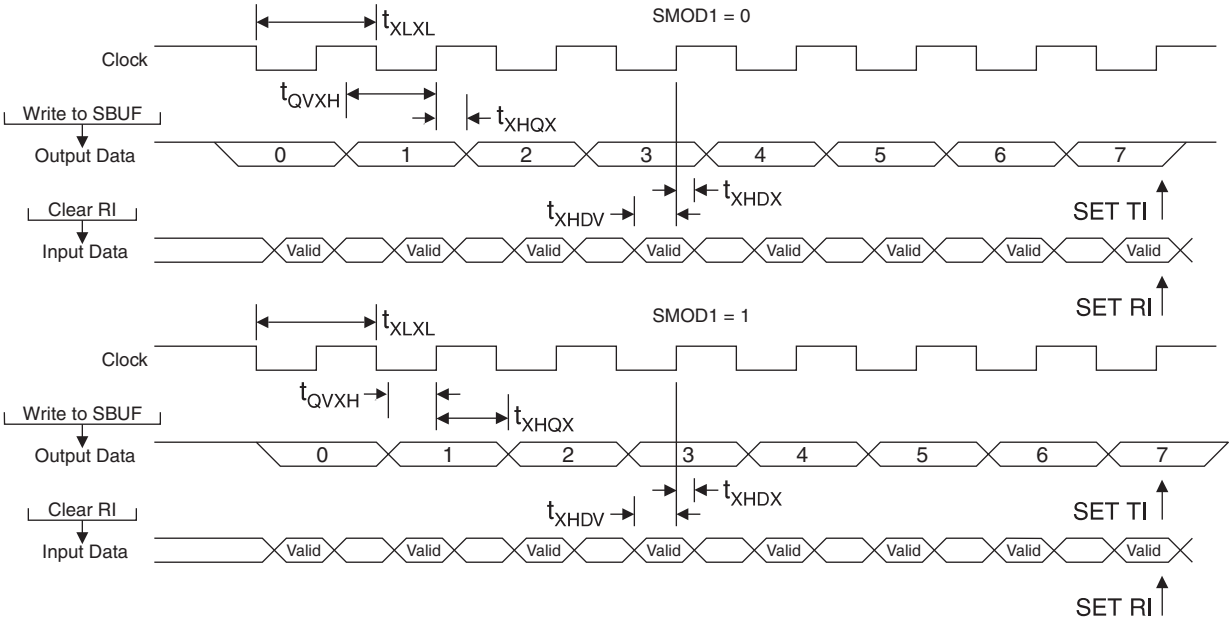

18.8 Test Conditions

18.8.1 AC Testing Input/Output Waveform[1]

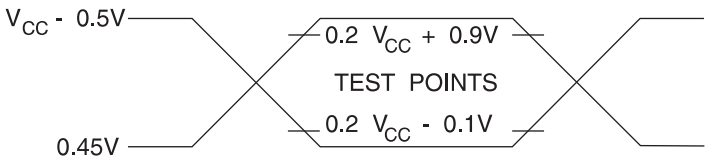

Note: 1. AC Inputs during testing are driven at V_{DD} - 0.5V for a logic “1” and 0.45V for a logic “0”. Timing measurements are made at V_{IH} min. for a logic “1” and V_{IL} max. for a logic “0”.

18.8.2 Float Waveform[1]

Note: 1. For timing purposes, a port pin is no longer floating when a 100 mV change from load voltage occurs. A port pin begins to float when 100 mV change from the loaded V_{OH}/V_{OL} level occurs.

18.8.3 I_{CC} Test Condition, Active Mode, All Other Pins are Disconnected[1]

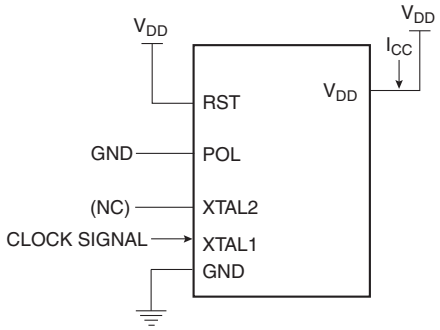

Notes: 1. For active supply current measurements all ports are configured in quasi-bidirectional mode. Timers 0, 1 and 2 are configured to be free running in their default timer modes. The CPU executes a simple random number generator that accesses RAM and SFR bus, and exercises the ALU and hardware multiplier.

18.8.4 I_{CC} Test Condition, Idle Mode, All Other Pins are Disconnected

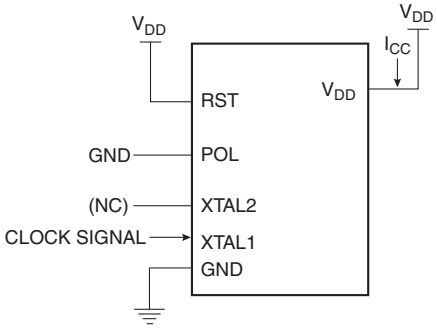

18.8.5 Clock Signal Waveform for I_{CC} Tests in Active and Idle Modes, $t_{CLCH} = t_{CHCL} = 5$ ns

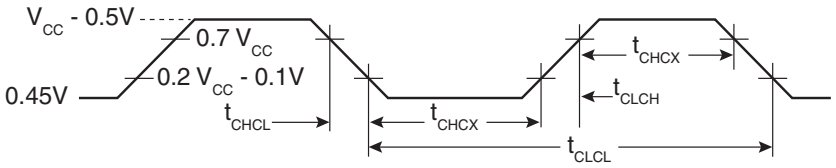

18.8.6 I_{CC} Test Condition, Power-down Mode, All Other Pins are Disconnected, V_{DD} = 2V to 5.5V

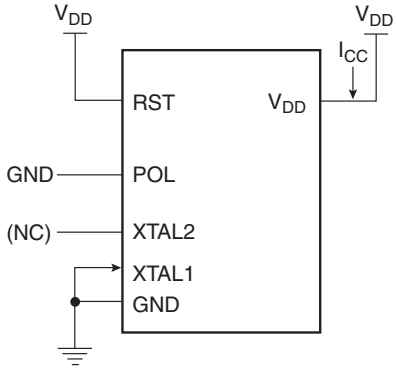

19. Ordering Information

19.1 Green Package Option (Pb/Halide-free)

Speed (MHz)	Power Supply	Code Memory	Ordering Code	Package	Operation Range
20	2.4V to 5.5V	4KB	AT89LP51-20AU AT89LP51-20PU AT89LP51-20JU AT89LP51-20MU	44A 40P6 44J 44M1	Industrial (-40° C to 85° C)
20	2.4V to 5.5V	8KB	AT89LP52-20AU AT89LP52-20PU AT89LP52-20JU AT89LP52-20MU	44A 40P6 44J 44M1	Industrial (-40° C to 85° C)

Package Types	
44A	44-lead, Thin Plastic Quad Flat Package (TQFP)
40P6	40-lead, 0.600” Wide, Plastic Dual Inline Package (PDIP)
44J	44-lead, Plastic J-leaded Chip Carrier (PLCC)
44M1	44-pad, 7 x 7 x 1.0 mm Body, Plastic Very Thin Quad Flat No Lead Package (VQFN/MLF)

20. Packaging Information

20.1 44A – TQFP

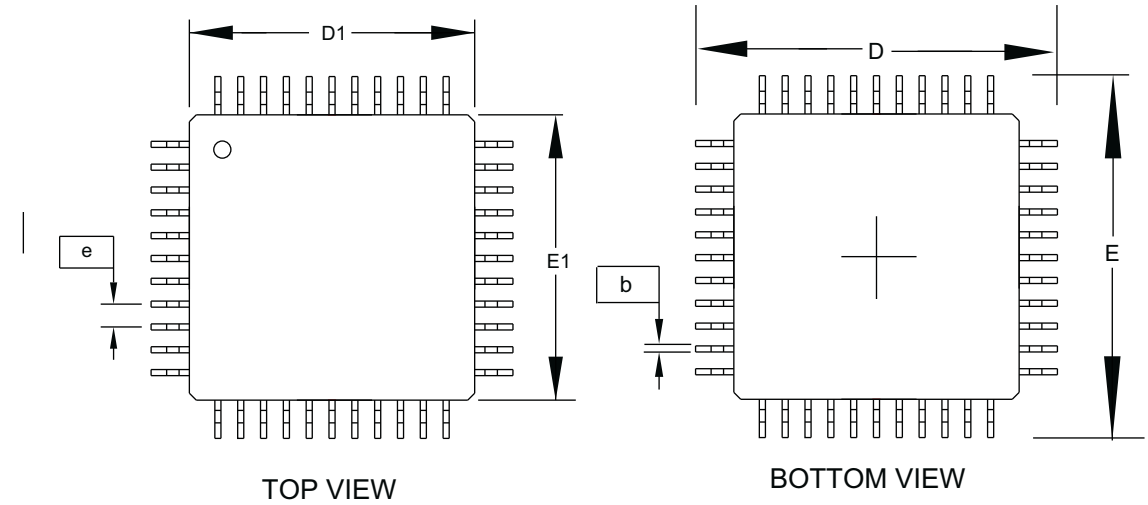

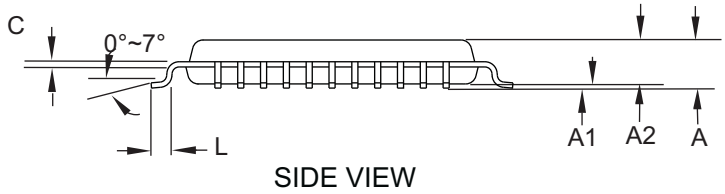

COMMON DIMENSIONS
(Unit of Measure = mm)

SYMBOL	MIN	NOM	MAX	NOTE
A	–	–	1.20	
A1	0.05	–	0.15	
A2	0.95	1.00	1.05	
D	11.75	12.00	12.25	
D1	9.90	10.00	10.10	Note 2
E	11.75	12.00	12.25	
E1	9.90	10.00	10.10	Note 2
B	0.30	–	0.45	
C	0.09	–	0.20	
L	0.45	–	0.75	
e	0.80 TYP			

Notes:
1. This package conforms to JEDEC reference MS-026, Variation ACB.
2. Dimensions D1 and E1 do not include mold protrusion. Allowable protrusion is 0.25 mm per side. Dimensions D1 and E1 are maximum plastic body size dimensions including mold mismatch.
3. Lead coplanarity is 0.10 mm maximum.

09/23/11

Package Drawing Contact: packagedrawings@atmel.com	TITLE	GPC	DRAWING NO.	REV.
	44A, 44-lead 10.0 x 10.0x1.0 mm Body, 0.80 mm Lead Pitch, Thin Profile Plastic Quad Flat Package (TQFP)	AIX	44A	C

20.2 40P6 – PDIP

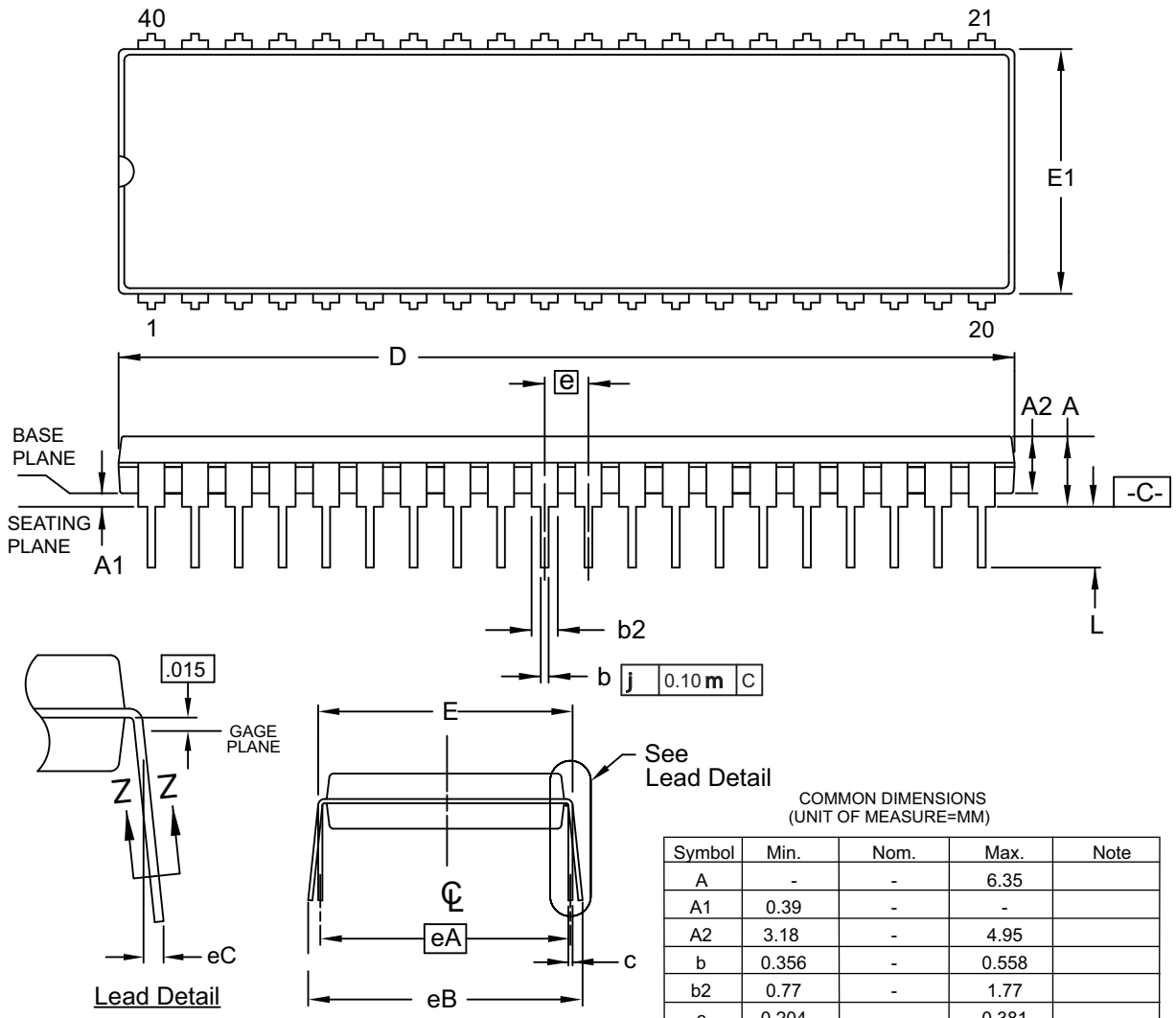

COMMON DIMENSIONS
(UNIT OF MEASURE=MM)

Symbol	Min.	Nom.	Max.	Note
A	-	-	6.35	
A1	0.39	-	-	
A2	3.18	-	4.95	
b	0.356	-	0.558	
b2	0.77	-	1.77	
c	0.204	-	0.381	
D	50.3	-	53.2	Note 2
E	15.24	-	15.87	
E1	12.32	-	14.73	Note 2
L	2.93	-	5.08	
e	2.54 BSC			
eA	15.24 BSC			
eB	-	-	17.78	
eC	0.000	-	1.524	

Notes:
1. This package conforms to JEDEC reference MS-011, Variation AC.
2. Dimensions D and E1 do not include mold Flash or Protrusion. Mold Flash or Protrusion shall not exceed 0.25 mm (0.010").

11/28/11

Package Drawing Contact: packagedrawings@atmel.com	TITLE	GPC	DRAWING NO.	REV.
	40P6, 40-lead, 0.600”/15.24 mm Wide Plastic Dual Inline Package (PDIP)	PBL	40P6	C

20.3 44J – PLCC

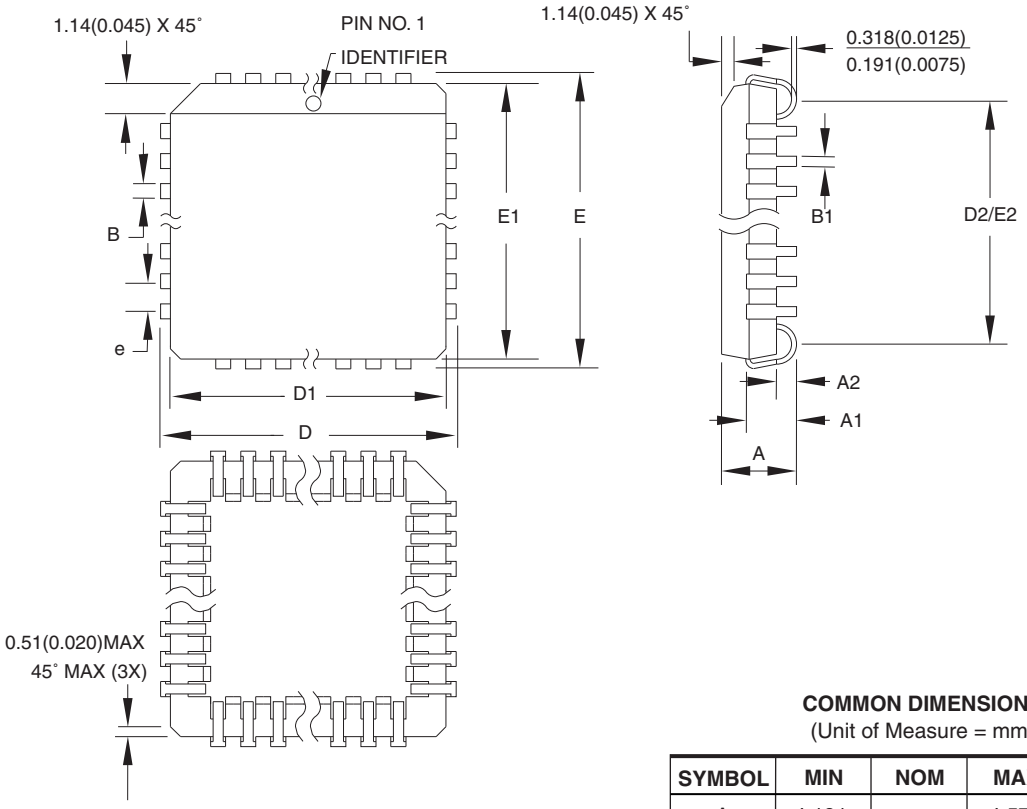

COMMON DIMENSIONS
(Unit of Measure = mm)

SYMBOL	MIN	NOM	MAX	NOTE
A	4.191	–	4.572	
A1	2.286	–	3.048	
A2	0.508	–	–	
D	17.399	–	17.653	
D1	16.510	–	16.662	Note 2
E	17.399	–	17.653	
E1	16.510	–	16.662	Note 2
D2/E2	14.986	–	16.002	
B	0.660	–	0.813	
B1	0.330	–	0.533	
e	1.270 TYP			

Notes:
1. This package conforms to JEDEC reference MS-018, Variation AC.
2. Dimensions D1 and E1 do not include mold protrusion. Allowable protrusion is .010"(0.254 mm) per side. Dimension D1 and E1 include mold mismatch and are measured at the extreme material condition at the upper or lower parting line.
3. Lead coplanarity is 0.004" (0.102 mm) maximum.

10/04/01

	TITLE	DRAWING NO.	REV.
2325 Orchard Parkway San Jose, CA 95131	**44J**, 44-lead, Plastic J-leaded Chip Carrier (PLCC)	44J	B

20.4 44M1 – VQFN/MLF

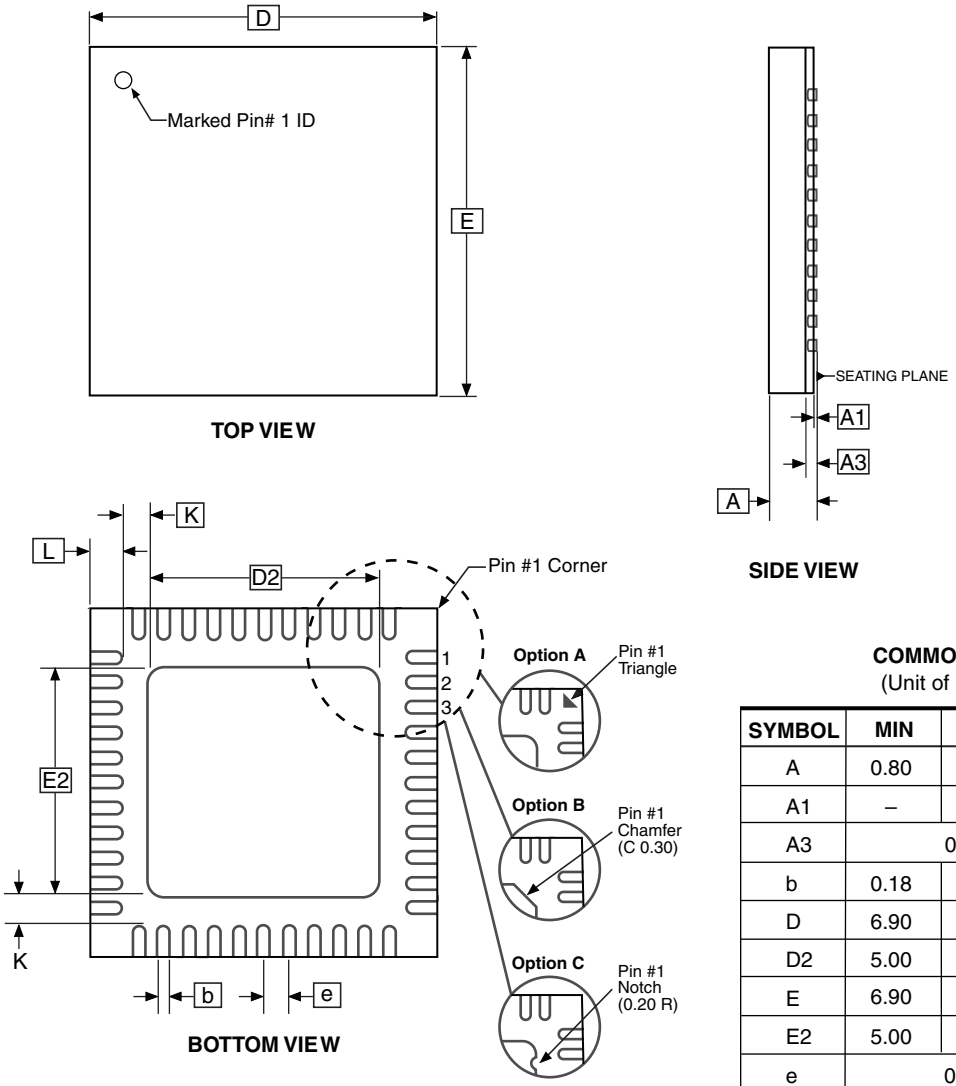

Note: JEDEC Standard MO-220, Fig. 1 (SAW Singulation) VKKD-3.

COMMON DIMENSIONS
(Unit of Measure = mm)

SYMBOL	MIN	NOM	MAX	NOTE
A	0.80	0.90	1.00	
A1	–	0.02	0.05	
A3		0.20 REF		
b	0.18	0.23	0.30	
D	6.90	7.00	7.10	
D2	5.00	5.20	5.40	
E	6.90	7.00	7.10	
E2	5.00	5.20	5.40	
e		0.50 BSC		
L	0.59	0.64	0.69	
K	0.20	0.26	0.41	

9/26/08

	TITLE	GPC	DRAWING NO.	REV.
Package Drawing Contact: packagedrawings@atmel.com	**44M1,** 44-pad, 7 x 7 x 1.0 mm Body, Lead Pitch 0.50 mm, 5.20 mm Exposed Pad, Thermally Enhanced Plastic Very Thin Quad Flat No Lead Package (VQFN)	ZWS	44M1	H

21. Revision History

Revision No.	History
Revision A – September 2010	• Initial Release
Revision B – December 2010	• Added AT89LP51 device • Updated Device IDs • Lowered Minimum Operating Voltage to 2.4V
Revision C – May 2011	• Added System Configuration (Section 2.2 on page 7) • Added Code size to Ordering table
Revision D – December 2011	• Removed Preliminary Status • Updated AC/DC characteristics (Section 18.2 on page 92 and Section 18.6 on page 102) • Added typical I/O characteristics (Section 18.3.3 on page 97, Section 18.3.4 on page 98 and Section 18.3.5 on page 99) • Added note on active power measurement (page 105)

Table of Contents

Features ***1***

1 Pin Configurations ***2***

1.1 40-lead PDIP 2

1.2 44-lead TQFP 2

..... ***3***

1.3 44-lead PLCC 3

1.4 44-pad VQFN/QFN/MLF 3

1.5 Pin Description 4

2 Overview ***6***

2.1 Block Diagram 7

2.2 System Configuration 7

2.3 Comparison to AT89S51/52 8

3 Memory Organization ***11***

3.1 Program Memory 11

3.2 Internal Data Memory 14

3.3 External Data Memory 14

3.4 In-Application Programming (IAP) 23

4 Special Function Registers ***24***

5 Enhanced CPU ***25***

5.1 Fast Mode 25

5.2 Compatibility Mode 26

5.3 Enhanced Dual Data Pointers 26

6 System Clock ***29***

6.1 Crystal Oscillator 29

6.2 External Clock Source 30

6.3 Internal RC Oscillator 30

6.4 System Clock Divider 31

7 Reset ***32***

7.1 Power-on Reset 32

7.2 Brown-out Reset 33

7.3 External Reset 33

7.4 Watchdog Reset 34

Table of Contents (Continued)

7.5 Software Reset 34

8 Power Saving Modes 34

8.1 Idle Mode 34

8.2 Power-down Mode 35

8.3 Reducing Power Consumption 37

9 Interrupts 37

9.1 Interrupt Response Time 38

10 I/O Ports 41

10.1 Port Configuration 41

10.2 Port Read-Modify-Write 44

10.3 Port Alternate Functions 45

11 Timer 0 and Timer 1 46

11.1 Mode 0 – 13-bit Timer/Counter 47

11.2 Mode 1 – 16-bit Timer/Counter 47

11.3 Mode 2 – 8-bit Auto-Reload Timer/Counter 48

11.4 Mode 3 – 8-bit Split Timer 48

11.5 Clock Output (Pin Toggle Mode) 49

12 Timer 2 51

12.1 Timer 2 Registers 52

12.2 Capture Mode 53

12.3 Auto-Reload Mode 53

12.4 Baud Rate Generator 55

12.5 Frequency Generator (Programmable Clock Out) 56

13 External Interrupts 57

14 Serial Interface (UART) 57

14.1 Multiprocessor Communications 59

14.2 Baud Rates 59

14.3 Framing Error Detection 61

14.4 Automatic Address Recognition 61

14.5 More About Mode 0 63

14.6 More About Mode 1 68

14.7 More About Modes 2 and 3 70

Table of Contents (Continued)

15 Programmable Watchdog Timer 73

15.1 Software Reset 73

16 Instruction Set Summary 75

17 Programming the Flash Memory 79

17.1 Physical Interface 79

17.2 Memory Organization 81

17.3 Command Format 82

17.4 Status Register 85

17.5 DATA Polling 85

17.6 Flash Security 85

17.7 User Configuration Fuses 86

17.8 User Signature 87

17.9 Programming Interface Timing 87

18 Electrical Characteristics 92

18.1 Absolute Maximum Ratings* 92

18.2 DC Characteristics 92

18.3 Typical Characteristics 93

18.4 Clock Characteristics 100

18.5 Reset Characteristics 101

18.6 External Memory Characteristics 102

18.7 Serial Port Timing: Shift Register Mode 104

18.8 Test Conditions 104

19 Ordering Information 107

19.1 Green Package Option (Pb/Halide-free) 107

20 Packaging Information 108

20.1 44A – TQFP 108

20.2 40P6 – PDIP 109

20.3 44J – PLCC 110

20.4 44M1 – VQFN/MLF 111

21 Revision History 112

Table of Contents i

Atmel Corporation
2325 Orchard Parkway
San Jose, CA 95131
USA
Tel: (+1) (408) 441-0311
Fax: (+1) (408) 487-2600
www.atmel.com
8051@atmel.com

Atmel Asia Limited
Unit 1-5 & 16, 19/F
BEA Tower, Millennium City 5
418 Kwun Tong Road
Kwun Tong, Kowloon
HONG KONG
Tel: (+852) 2245-6100
Fax: (+852) 2722-1369

Atmel Munich GmbH
Business Campus
Parkring 4
D-85748 Garching b. Munich
GERMANY
Tel: (+49) 89-31970-0
Fax: (+49) 89-3194621

Atmel Japan
9F, Tonetsu Shinkawa Bldg.
1-24-8 Shinkawa
Chuo-ku, Tokyo 104-0033
JAPAN
Tel: (+81) (3) 3523-3551
Fax: (+81) (3) 3523-7581

Disclaimer: The information in this document is provided in connection with Atmel products. No license, express or implied, by estoppel or otherwise, to any intellectual property right is granted by this document or in connection with the sale of Atmel products. **EXCEPT AS SET FORTH IN ATMEL'S TERMS AND CONDITIONS OF SALE LOCATED ON ATMEL'S WEB SITE, ATMEL ASSUMES NO LIABILITY WHATSOEVER AND DISCLAIMS ANY EXPRESS, IMPLIED OR STATUTORY WARRANTY RELATING TO ITS PRODUCTS INCLUDING, BUT NOT LIMITED TO, THE IMPLIED WARRANTY OF MERCHANTABILITY, FITNESS FOR A PARTICULAR PURPOSE, OR NON-INFRINGEMENT. IN NO EVENT SHALL ATMEL BE LIABLE FOR ANY DIRECT, INDIRECT, CONSEQUENTIAL, PUNITIVE, SPECIAL OR INCIDENTAL DAMAGES (INCLUDING, WITHOUT LIMITATION, DAMAGES FOR LOSS OF PROFITS, BUSINESS INTERRUPTION, OR LOSS OF INFORMATION) ARISING OUT OF THE USE OR INABILITY TO USE THIS DOCUMENT, EVEN IF ATMEL HAS BEEN ADVISED OF THE POSSIBILITY OF SUCH DAMAGES.** Atmel makes no representations or warranties with respect to the accuracy or completeness of the contents of this document and reserves the right to make changes to specifications and product descriptions at any time without notice. Atmel does not make any commitment to update the information contained herein. Unless specifically provided otherwise, Atmel products are not suitable for, and shall not be used in, automotive applications. Atmel's products are not intended, authorized, or warranted for use as components in applications intended to support or sustain life.

© 2011 Atmel Corporation. All rights reserved. Atmel®, Atmel logo and combinations thereof, and others are registered trademarks or trademarks of Atmel Corporation or its subsidiaries. Other terms and product names may be trademarks of others.