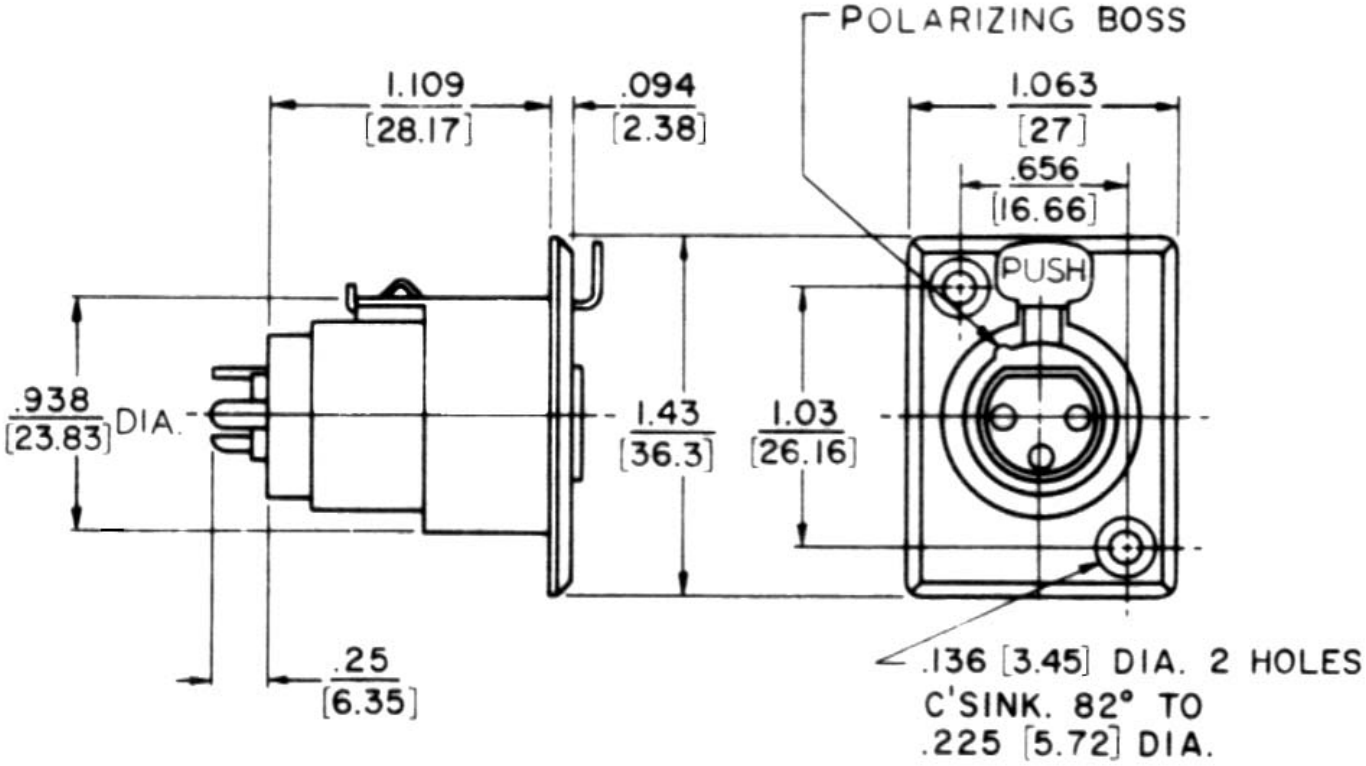


| | | |
|---|---|---|
| TITLE **MICROPHONE CONNECTOR** | | SCALE **NTS** |
| DRAWING NO. **25-533/535** | | |
| | | UNITS **inch [mm]** |
| FILE NAME *25-533&535.pdf* | | SHEET **1/1** |

MODE ELECTRONICS

**Mode Electronics Part Number 25-533/535-0**