142-0002-0001 Product Details

Live Product Chat

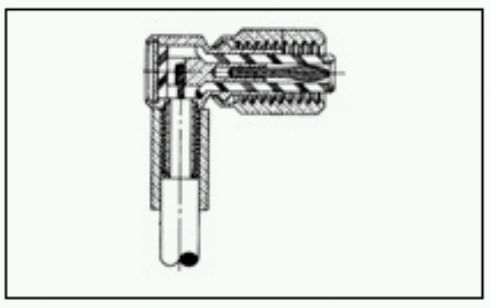

142-0002-0001
(1495009-1)
TE Part Number: 1495009-1
Active
Add to Part List

Ultra Miniature (LEPRA/CON) RF Connectors

Not EU RoHS or ELV Compliant

Product Highlights:

- Connector
- Plug
- Terminate To Coaxial Cable
- Coupler Style = Threaded
- Coaxial Cable Termination Type = Solder

View all Features | Find Similar Products

Quick Links
- Check Pricing & Availability
- Search for Tooling
- Product Feature Selector
- Contact Us About This Product
- Request Samples NEW!

Documentation & Additional Information

Product Drawings:
- PLUG, RIGHT ANGLE (PDF, English)

Catalog Pages/Data Sheets:
- None Available

Product Specifications:
- None Available

Application Specifications:
- None Available

Instruction Sheets:
- LEPRA/CON Screw-On Series Right-Angle Plugs (PDF, English)

CAD Files:
- None Available

List all Documents

Additional Information:
- Product Line Information

Related Products:
- Tooling

Product Features (Please use the Product Drawing for all design activity)

Product Type Features:
- Product Type = Connector
- Gender = Plug
- Body Style = Right Angle
- Coupling Nut Style = Hex
- Safety Wire Holes = Without
- Grade = Commercial
- Body Material = Brass

Mechanical Attachment:
- Panel Attachment = Without

Electrical Characteristics:
- Connector Impedance (Ω) = 50
- Solderless = No
- Hex Head Size (Across Flats) (mm [in]) = 3.96 [0.156]

Termination Related Features:
- Coaxial Cable Termination Type = Solder

Body Related Features:
- Coupler Style = Threaded
- Locking Interface = Without
- Body Plating = Gold per MIL-G-45204, Type II, Grade C, Class 1

Contact Related Features:
- Center Contact Plating = Gold per MIL-G-45204, Type II, Grade C, Class 1

Configuration Related Features:
- Coaxial Cable Type = RG 178/U, RG 196/U

Industry Standards:
- RoHS/ELV Compliance = Not ELV/RoHS compliant
- Lead Free Solder Processes = Not suitable for lead free processing

Conditions for Usage:
- Terminate To = Coaxial Cable

Other:
- Brand = Microdot

© 2008 Tyco Electronics Corporation All Rights Reserved