| Mallory Sonalert Products,Inc. | Part #: ZA016LDPS1 |
|---|---|
| **Sales Outline Drawing** | Revision: **B** |

## Specifications:

| | |
|---|---|
| Sound Level Category | Loud |
| Mode of Operation | Short Beep @ 1 PPS, 10% Duty Cycle |
| Voltage Rating | 6 to 16 VDC |
| Frequency | 3300 ± 500 Hz |
| Loudness @ 2 FT | 85 to 95 dB(A) Typ. |
| Current Draw | 40mA MAX |
| Housing Material | 6/6 Nylon, Color: Black |
| Storage Temperature | -40° to +80° C |
| Operating Temperature | -30° to +65° C |
| Panel Mounting | Recommended hole size is 22.5 mm. Thread front will fit standard 22.5mm hole. |
| Knurled Nut | Used to attach part to panel. The max recommended torque is 10 in-lbs. |
| Weight (Typical) | 28 g |
| NEMA 3R,4X, & 12 | Approved with use of included gasket. |
| Options | Please contact factory. |

## Dimensions: Inches (mm)

**cUL Recognized** **ROHS Compliant**

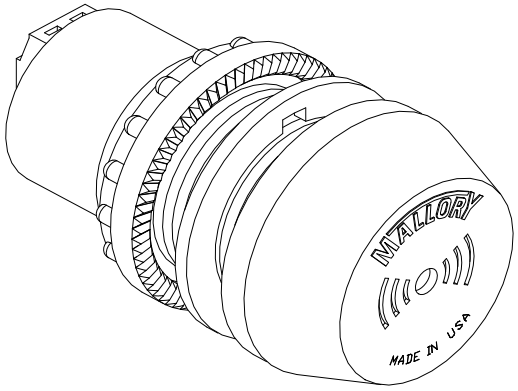


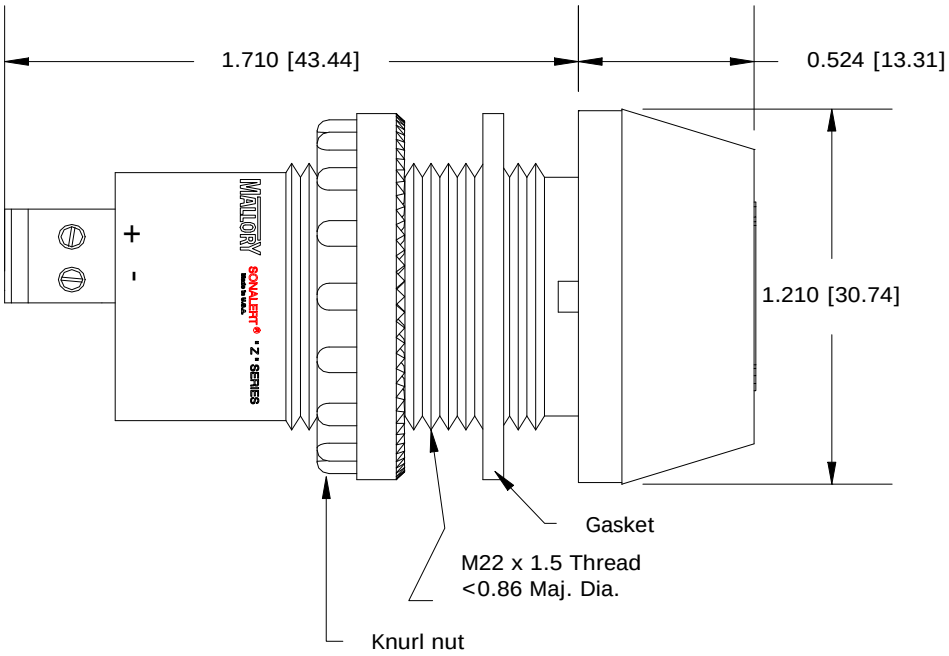


4411 South High School Road, Indianapolis, Indiana 46241 U.S.A · Phone: (317) 612-1000 Fax: (317) 612-1010 www.mallory-sonalert.com