May.1.2019 Copyright 2019 HIROSE ELECTRIC CO., LTD. All Rights Reserved.
In case of consideration for using Automotive equipment / device which demand high reliability, kindly contact our sales window correspondents.

	COUNT	DESCRIPTION OF REVISIONS	BY	CHKD	DATE		COUNT	DESCRIPTION OF REVISIONS	BY	CHKD	DATE
1	2	RE-E-10362	T.T	Y.E	04. 11. 30						. .
2	1	RE-E-10476	T.T	Y.E	05.02.03						. .
					. .						. .

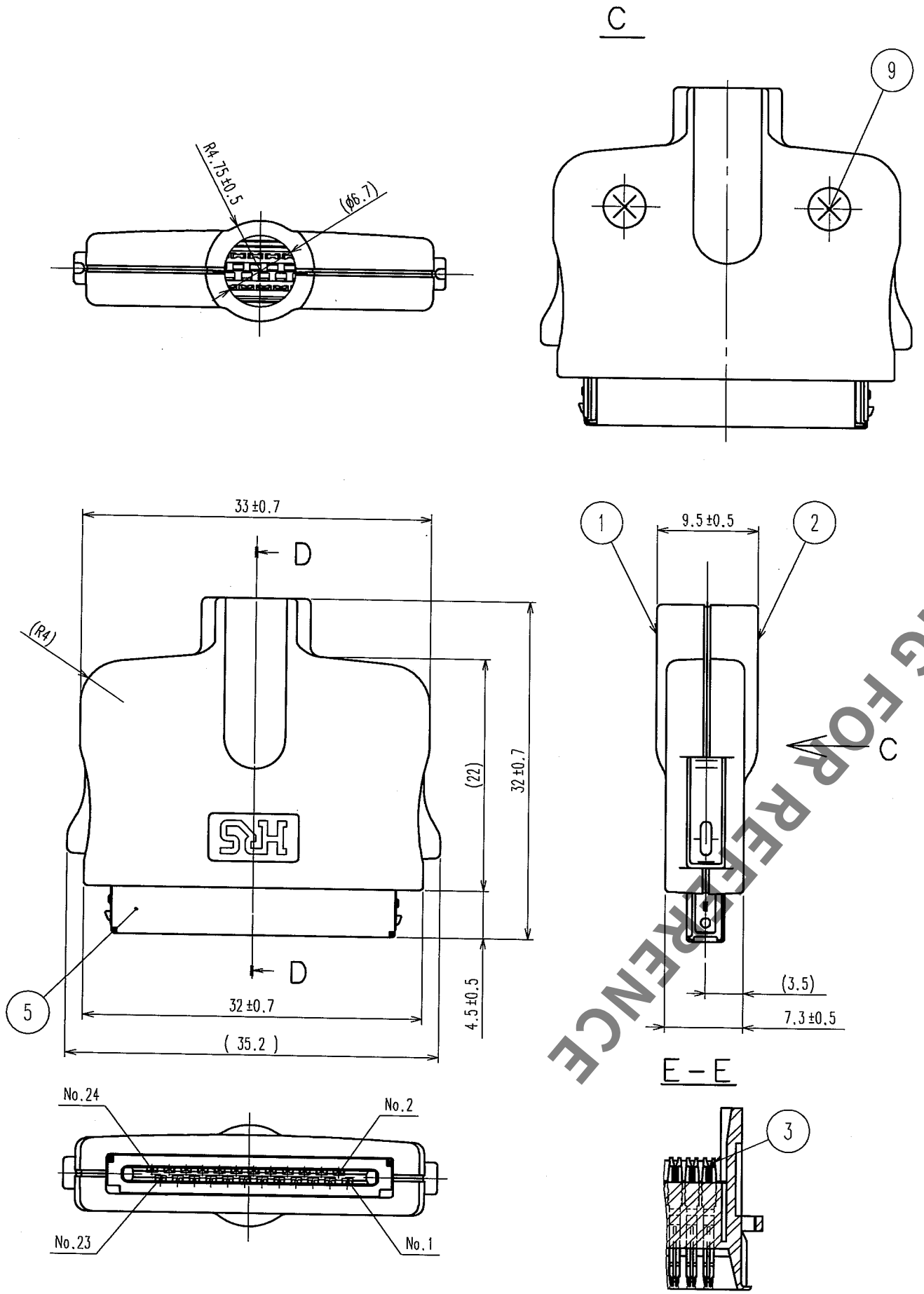

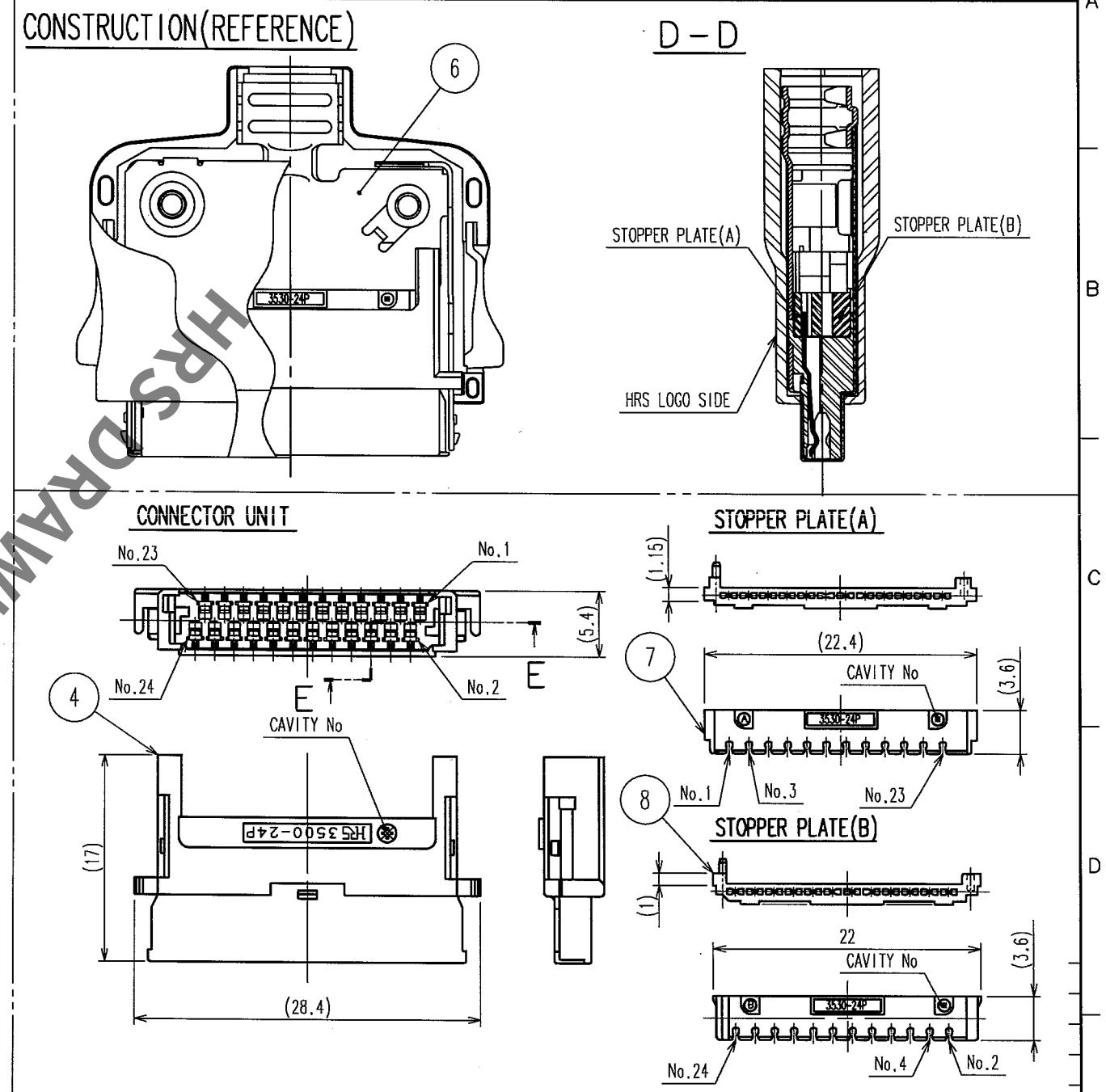

HRS DRAWING FOR REFERENCE

NO.	MATERIAL	FINISH, REMARKS	NO.	MATERIAL	FINISH, REMARKS
5	STAINLESS STEEL				
4	POLYAMIDE	(BLACK)UL94V-0	9	STEEL	(BLACK)TAPPING SCREW
3	BERYLLIUM COPPER	CONTACT AREA:GOLD PLATING 0.2μm INSULATION DISPLACEMENT AREA:GOLD PLATING 0.03μm	8	PBT	(BLACK)UL94V-0
2	POLYCARBONATE △1	(BLACK)UL94V-0	7	PBT	(BLACK)UL94V-0
1	POLYCARBONATE △1	(BLACK)UL94V-0	6	STAINLESS STEEL	

CODE NO.(OLD)	DRAWN	DESIGNED	CHECKED	APPROVED	RELEASED
	T.TANIGUCHI 04.10.13	T.TANIGUCHI 04.10.13	Y.ENAMI 04.10.14	H.MIWA 04.10.14	. .

TO

NOTE.1 THIS PRODUCT SHALL BE IN DISASSEMBLED CONDITION (EXCEPT CONNECTOR UNIT ③ , ④) WHEN DELIVERED.
△2 2 MAKE SURE TO UNLOCK THE CONNECTOR BEFORE THE EXTRACTION.

SCALE 2 : 1
UNITS mm

DRAWING NO. EDC3-124785-01

HRS HIROSE ELECTRIC CO., LTD

PART NO. 3530A-24P-CV(50)

CODE NO. CL235-0024-9-50

1/1

FORM NO.229