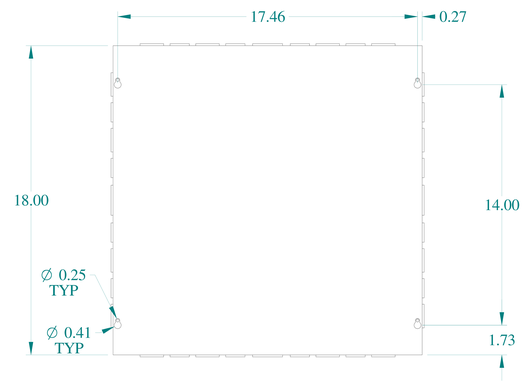

TOP VIEW

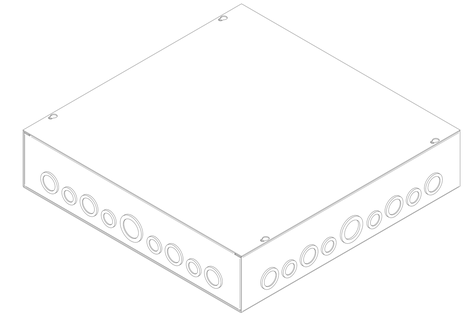

ISOMETRIC VIEWS

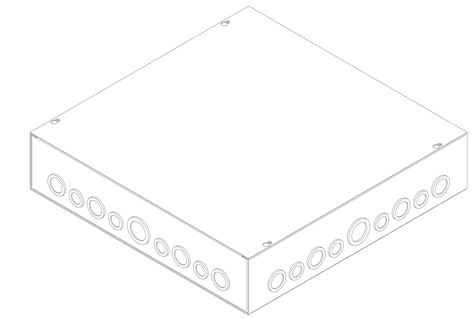

SIDE VIEW

FRONT VIEW

SIDE VIEW

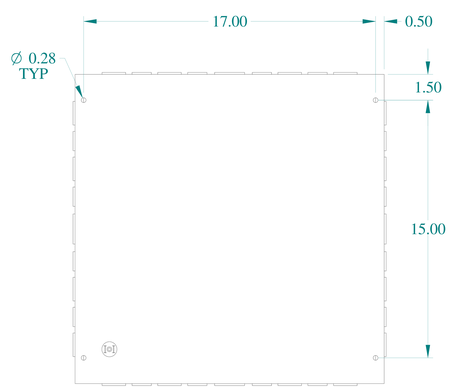

BOTTOM VIEW

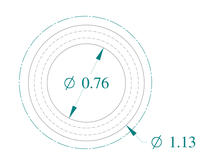

DETAIL Z
TYP

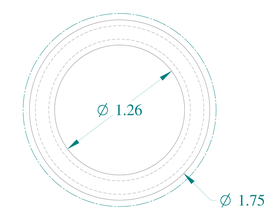

DETAIL Y
TYP

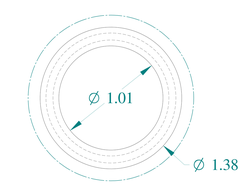

DETAIL X
TYP

HAMMOND MANUFACTURING®

www.hammondmfg.com

Data subject to change without notice.

Part # : CSKO18184	Date : Mar. 24, 2019

Link:www.hammfg.com/CSKO18184