DIMENSIONS:	
A	3.125" ±0.063
B	3.936" ±0.125
C	3.800" ±0.063
D	2.500" ±0.063
E	2.688" ±0.063
G	0.203" x 0.400" ±0.015

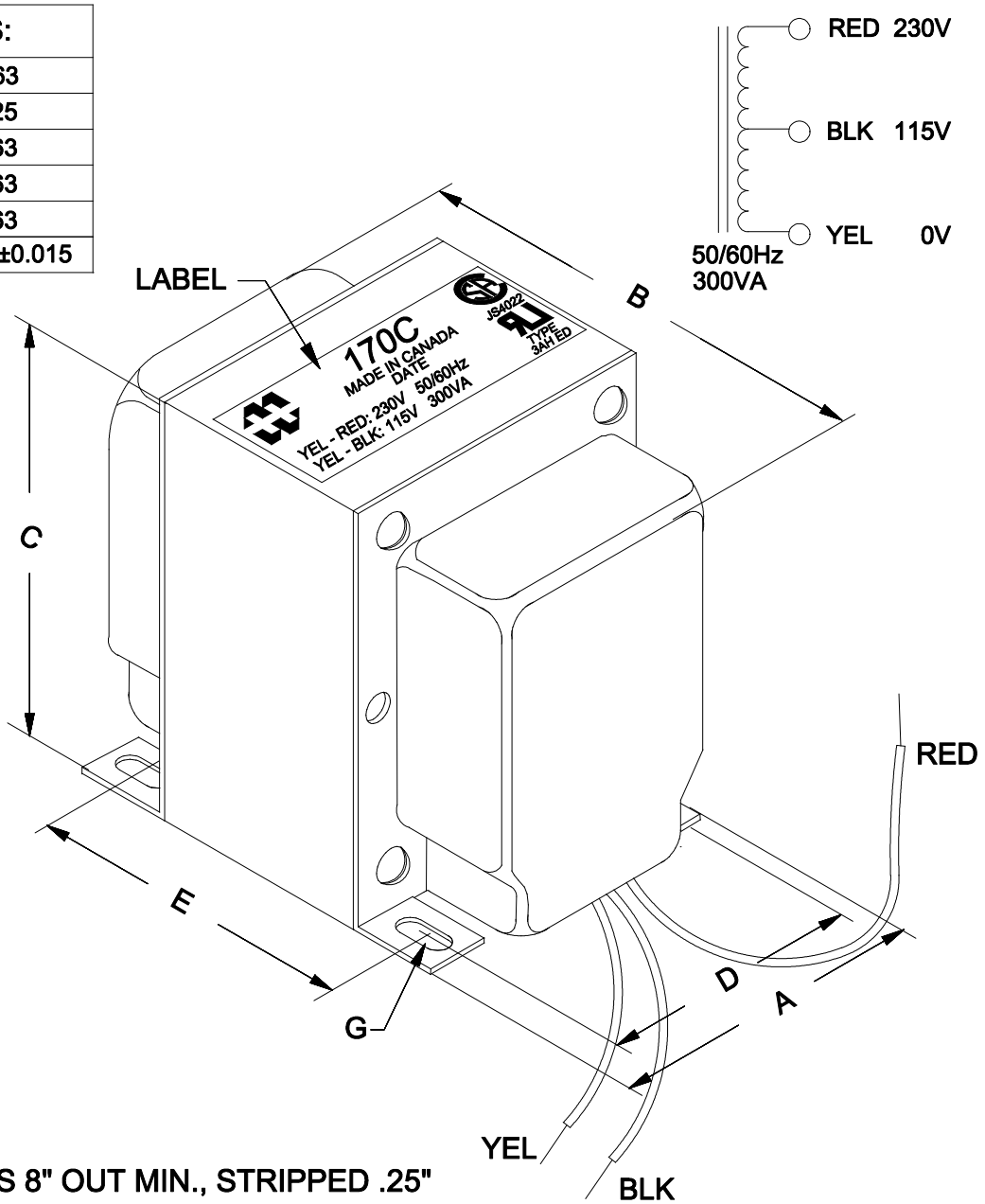

NOTE: ALL LEADS 8" OUT MIN., STRIPPED .25"

ELECTRICAL DATA:		
TESTS	CONDITIONS	ACCEPTANCE CRITERIA
Iex	@ 230V, 60Hz, YEL - RED	107mA MAX.
Sec. N.L.V.	@ 230V, 60Hz, YEL - RED	
	YEL - BLK =	115V ±2%
DCR	@ 20°C, YEL - RED =	2.861 Ω ±20%
HIPOT	PRMARY - CORE	2000V, 60Hz, 1 SEC

HAMMOND MANUFACTURING T.M.
ELECTRONIC DIVISION
52 RANKIN PLACE,
WATERLOO, ONTARIO, N2J 3Z5
PH # (519) 886-6181
FAX # (519) 886-9540

TITLE
LINE AUTO-TRANSFORMER

NO	DATE	REVISION	
0	02/28/14	RELEASED.	C.I.

DWG. BY: CORINA ILIE
DATE: 02/28/14
DIM IN(X)MM( )

170C