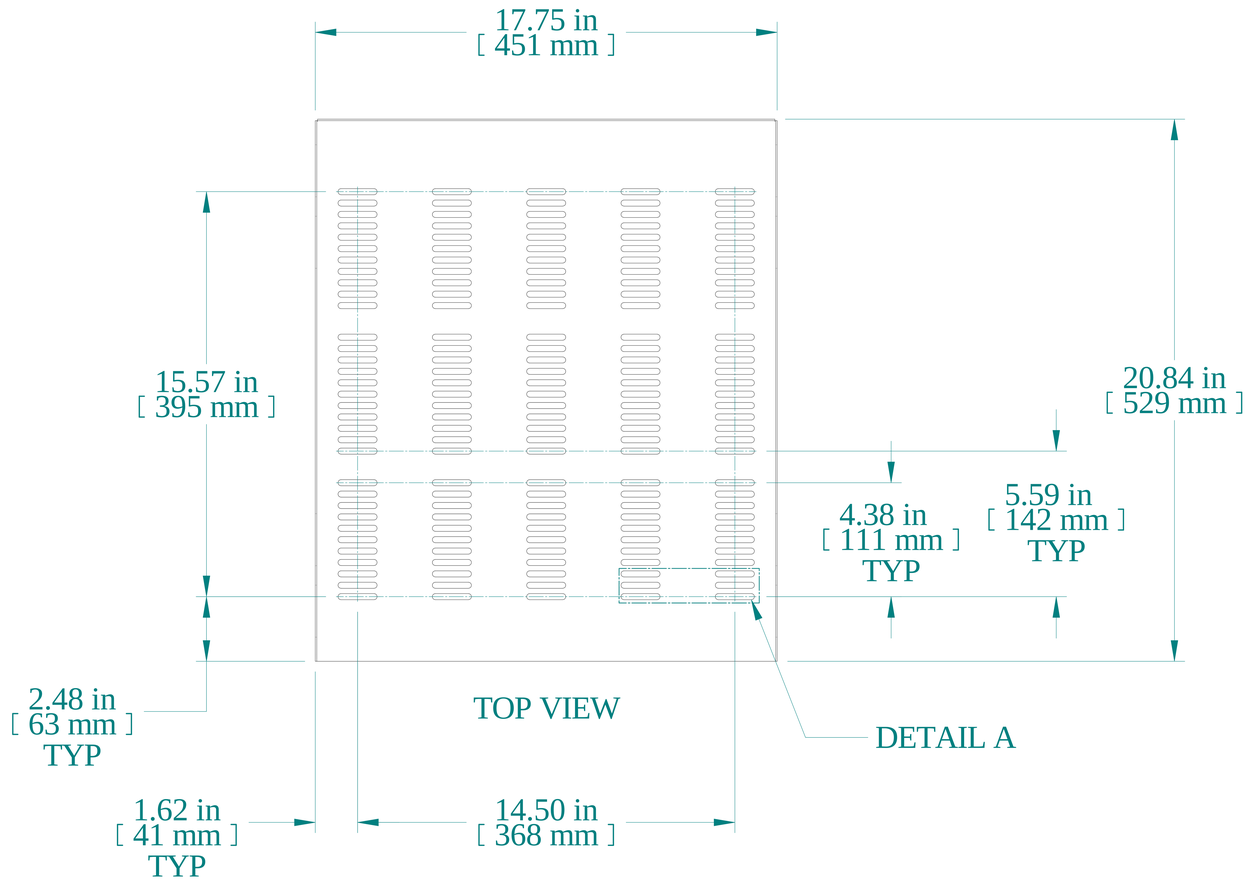

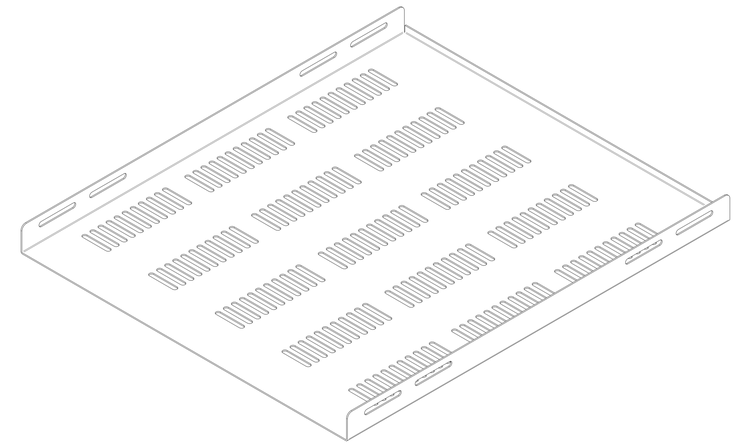

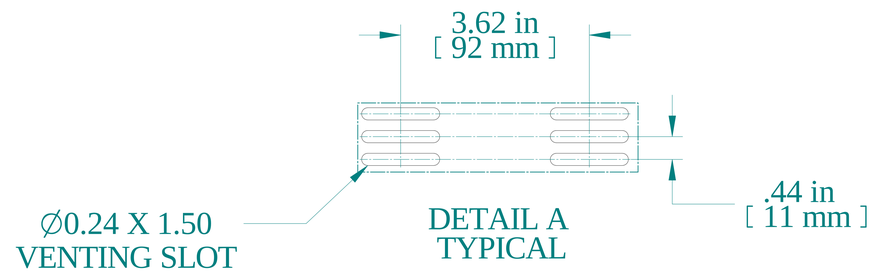

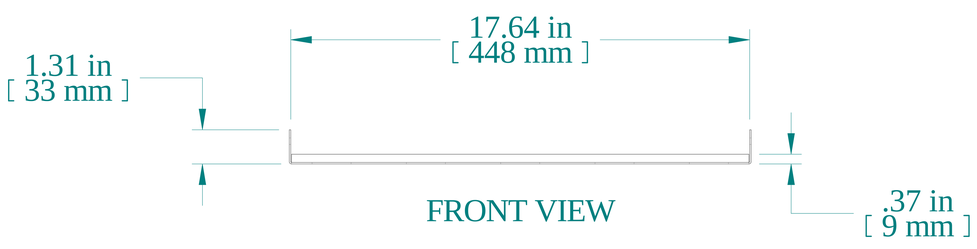

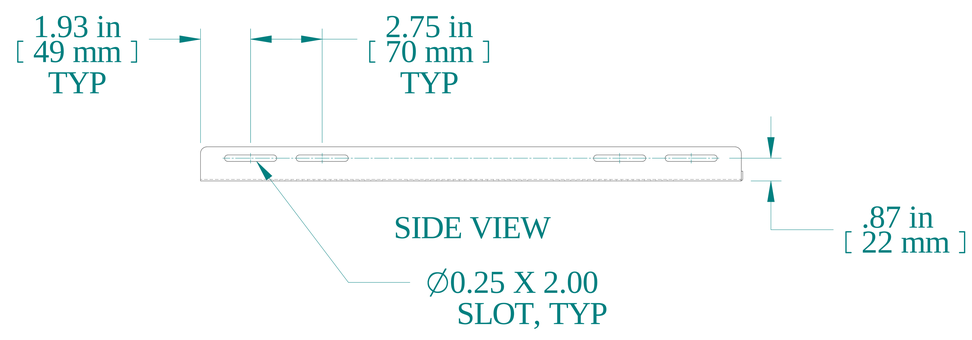

Data subject to change without notice. Isometric drawing not to scale.

PART NUMBERS	
RZVS1921BK1	PAINTED BLACK TEXTURED

NOTES
Heavy Duty, 14 GA. Steel Construction Includes Mounting Hardware

www.hammondmfg.com

PART NO. RZVS1921