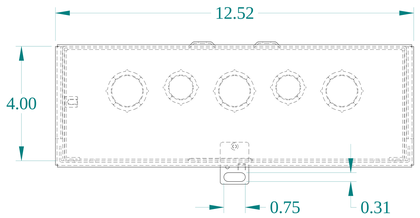

TOP VIEW

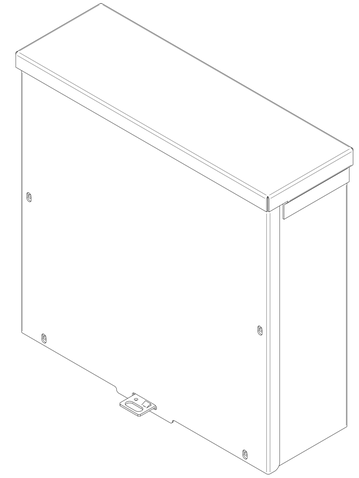

ISOMETRIC VIEWS

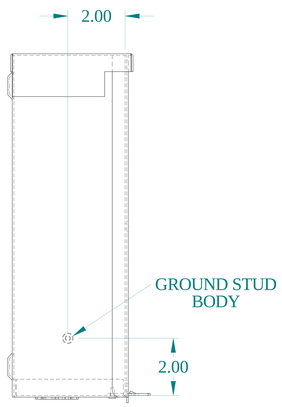

SIDE VIEW

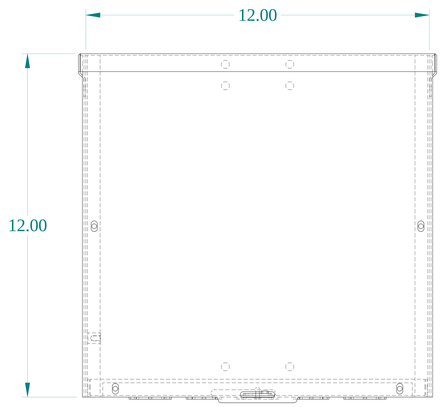

FRONT VIEW

SIDE VIEW

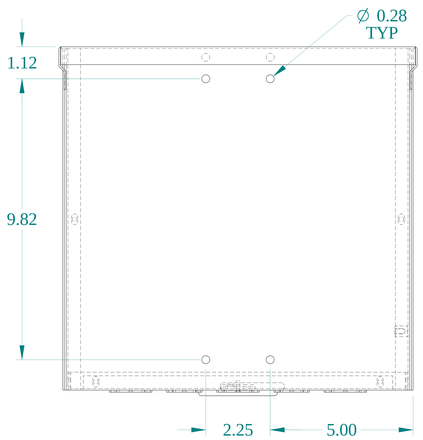

BACK VIEW

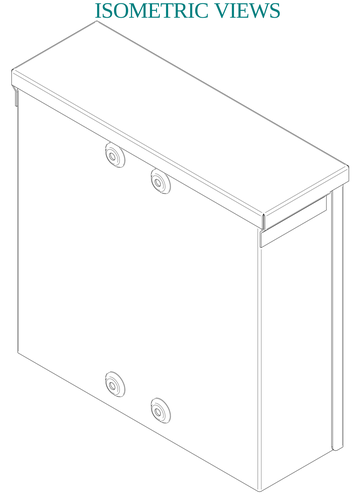

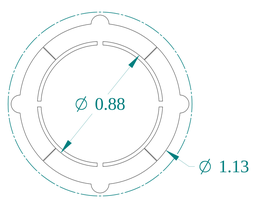

DETAIL Y
TYP

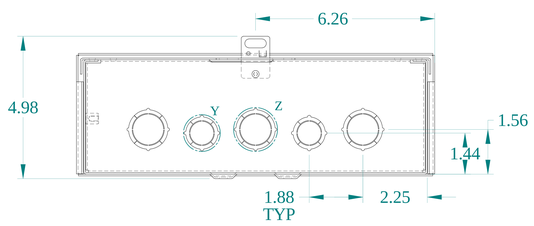

BOTTOM VIEW

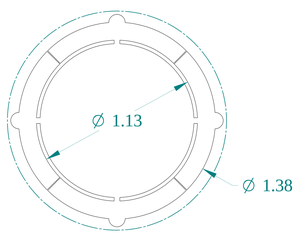

DETAIL Z
TYP

HAMMOND MANUFACTURING®

www.hammondmfg.com

Data subject to change without notice.

Part # : C3R12124SC	Date : Mar. 6, 2025

Link:www.hammfg.com/C3R12124SC