# PRODUCT NUMBER

## 10075024–XXX–XXXLF

PLATING (AS AVAILABLE)
- S = 0.38µm GOLD ON CONTACT AREA 2µm MIN MATTE TIN ON TAIL
- G = 0.76µm GOLD ON CONTACT AREA 2µm MIN MATTE TIN ON TAIL
- F = GOLD FLASH ON CONTACT AREA 2µm MIN MATTE TIN ON TAIL
- 1.27µm MIN NICKEL UNDERPLATING

PIN STYLE, SEE TABLE (AS AVAILABLE)

OPTIONAL LETTER, SEE NOTE 7 (AS AVAILABLE)

POSITIONS PER ROW 02 TO 25

PACKAGING, SEE NOTE 5 (MAY BE SUBJECT TO TOOLING FEES)

LEAD FREE RoHS COMPATIBLE SEE NOTE 6

**EXTENDED RANGE**
- TOOLING FEASIBILITY CONFIRMED
- SAMPLES ON DEMAND
- AVAILABILITY ON DEMAND

| PIN STYLE | DIM "A" ±0.25 | DIM "B" ±0.20 |
|---|---|---|
| 01 | 4.00 | 2.00 |
| 02 | 6.90 | 2.00 |
| 03 | 5.80 | 2.00 |
| 04 | 6.00 | 3.00 |
| 05 | 5.70 | 2.30 |
| 06 | 2.00 | 3.00 |
| 07 | 4.00 | 2.50 |

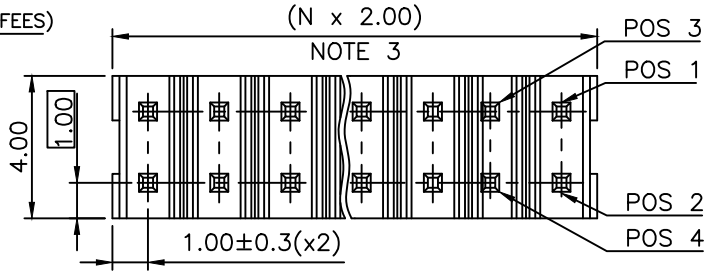


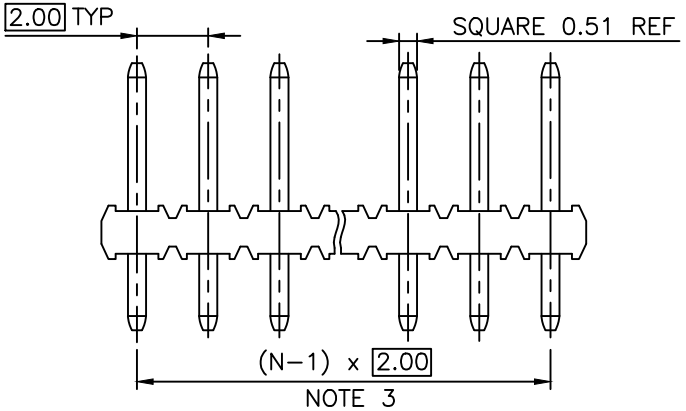


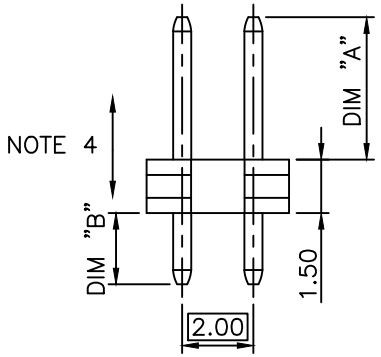


NOTES:
1 – MATERIAL HOUSING: HIGH TEMP. THERMOPLASTIC UL 94V–0, COLOR BLACK
2 – MATERIAL TERMINAL: COPPER ALLOY
3 – TO DETERMINE DIMENSIONS:
N = NUMBER OF POSITIONS PER ROW
4 – 7N MIN. PIN RETENTION IN EITHER DIRECTION.
5 – PACKAGING:
= STANDARD PACKAGING IN POLYBAG
U = TUBE WITHOUT PICK UP CAP AVAILABLE FROM 03 TO 25 POS PER ROW
P = TUBE WITH PICK UP CAP AVAILABLE FROM 03 TO 25 POS PER ROW
A = TAPE AND REEL WITH PICK UP CAP, AS AVAILABLE.
6 – RoHS COMPATIBLE PRODUCT SPECIFICATIONS
a – PLATING:
– "LF" MEANS THE PRODUCT IS LEAD–FREE, 2µm MINIMUM MATTE TIN OVER 1.27µm MINIMUM NICKEL UNDERPLATE.
b – MANUFACTURING PROCESS COMPATIBILITY
– THE HOUSING WILL WITHSTAND EXPOSURE TO 260°C PEAK TEMPERATURE FOR 30 SECONDS MAX IN A CONVECTION, INFRA–RED, OR VAPOR PHASE OR REFLOW OVEN
c – LABELLING:
– MEETS PACKAGING SPECS AS PER GS–14–920
d – LEGAL STATEMENT : SEE GS–47–0004
7 – OPTIONAL LETTER:
FOR FULL LOADED PRODUCT USE –
FOR POLARIZED VERSIONS, SEE TABLE
8 – THIS PART SERIES IS NOT INITIALLY INTENDED FOR AUTOMOTIVE APPLICATIONS. ADDITIONAL FEES ARE CHARGEABLE FOR ANY ADDITIONAL QUALIFICATION AND TEST REPORTS PERFORMED OUTSIDE THE SCOPE OF THE STANDARD PRODUCT SPECIFICATIONS.
9 – UNLESS OTHERWISE APPROVED BY AMPHENOL, ALL PARTS AND COMPONENTS ARE DESIGNED & BUILT ACCORDING TO AMPHENOL'S SPECIFICATIONS WHICH ARE SUBJECT TO CHANGE WITHOUT NOTICE.

| OPTIONAL LETTER FOR POLARIZED VERSION | MISSING PIN POSITION |
|---|---|
| A | 20 |
| B | 9 |

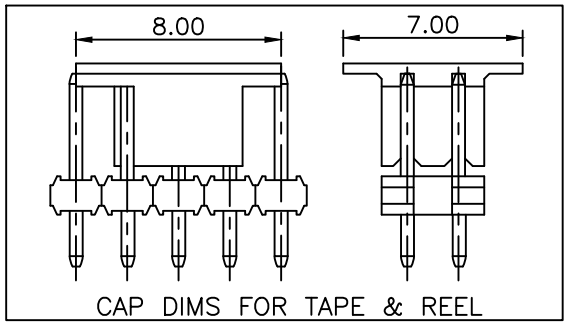


CAP DIMS FOR TAPE & REEL

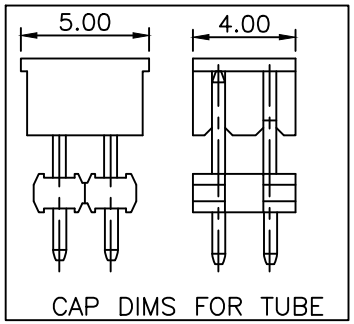


CAP DIMS FOR TUBE

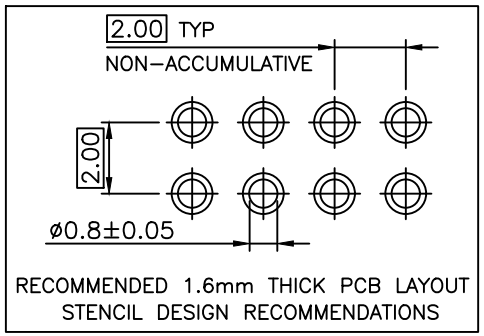


RECOMMENDED 1.6mm THICK PCB LAYOUT STENCIL DESIGN RECOMMENDATIONS

| ltr | ecn no | dr | date |
|---|---|---|---|
| H | B–19797 | AMA | 14.12.16 |
| J | F–23051 | AMA | 16.01.15 |
| K | F–26013 | DDE | 17.02.02 |
| L | F–27930 | DDE | 17.09.11 |
| M | F–47179 | DDE | 23.02.02 |
| N | F–55042 | DDE | 25.01.30 |

mat'l. code

surface ISO 1302 ✓ | tolerance ISO 406 ISO 1101 | projection

tolerances unless otherwise specified: angles | linear .x ±0.3, .xx ±0.15, .xxx ±0.05 | mm | scale 5:1

| | | |
|---|---|---|
| dr | L MULIN | 07.01.04 |
| engr | J.COMPAGNON | 07.01.04 |
| chr | | |
| appd | J.COMPAGNON | 07.01.04 |

sheet index | revision sheet

product family: MINITEK

title: UNSHR.HEADER 2.00 mm VERTICAL PIP

dwg no: 10075024 | sheet 1 of 1 | size A3

type: CUSTOMER Drawing

Amphenol FCi

Amphenol FCi FCIconnect.com
Copyright FCI