used for:

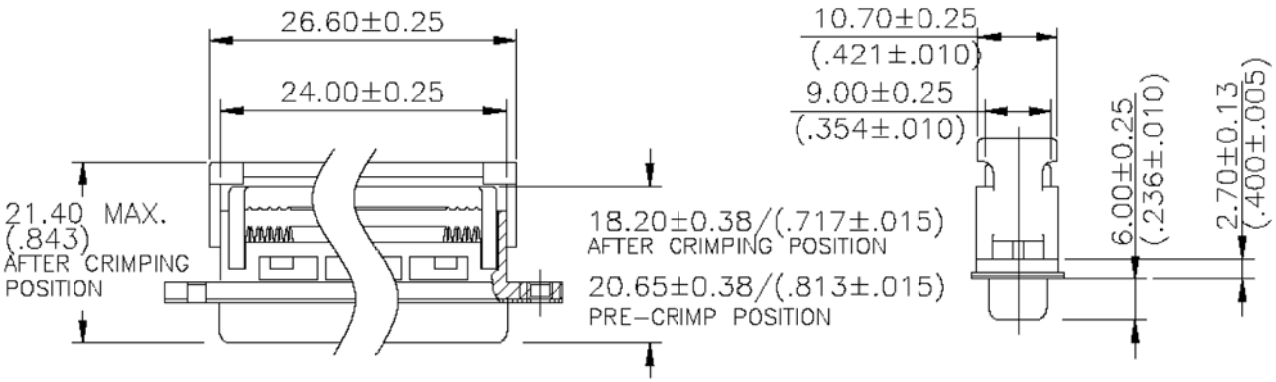

Directive 2002/95/EC „RoHS" Compliant

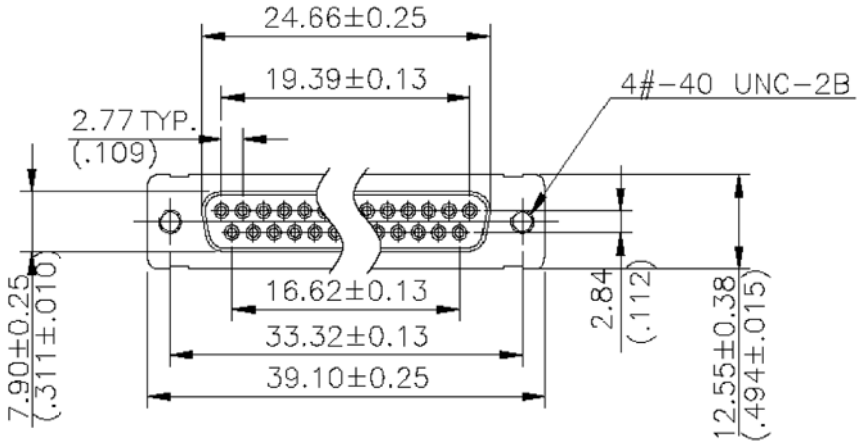

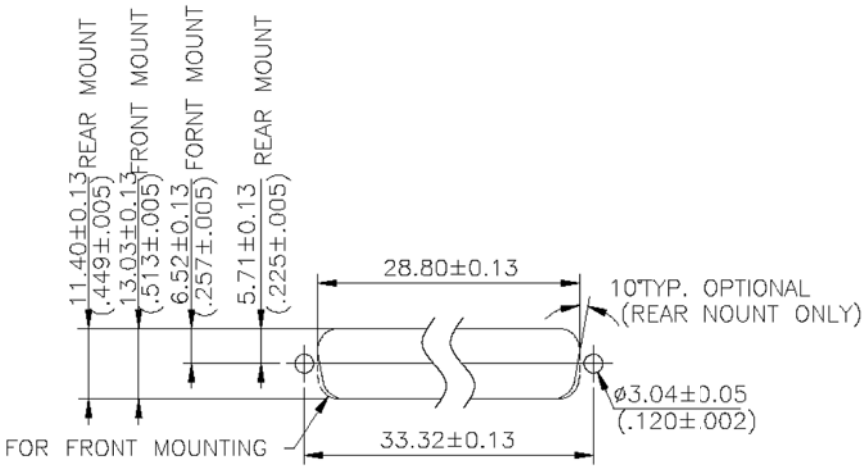

RECOMMENDED PANEL CUTOUT DIMENSIONS

SPECIFICATION :
.CURRENT RATING : 1 AMP.
.INSULATION RESISTANCE : ≥1000 MΩ MIN. (AT 500 V DC)
.DIELECTRIC WITHSTANDING VOLTAGE : AC 500 V MIN. (FOR 1 MINUTE)
.OPERATING TEMPERATURE : -55°C TO 105°C
.CONTACT RESISTANCE : ≤ 15mΩ
.DIELECTRIC MATERIAL : PBT WITH GLASS-FIBER REINFORCED UL 94V-0
.COLOR : BLACK
.CONTACT MATERIAL : PHOSPHOR BRONZE
.CONTACT PLATING : 30u" SELECTIVE GOLD OVER NICKEL
.WIRE SIZE : AWG 26 & 28 STRANDED , 1.27mm CONDUCTOR CENTRE FLAT CABLE

THIS DRAWING MAY NOT BE COPIED OR REPRODUCED IN ANY WAY, AND MAY NOT BE PASSED ON TO A THIRD PARTY WITHOUT WRITTEN PERMISSION. OWNERSHIP AND COPYRIGHT OF CONEC CORPORATION

DO NOT ALTER CAD DRAWING BY HAND

tolerance
unless otherwise specified tolerance shall be as follow
Decimal: .X ±0.5 .XX ±0.25 Angles:

finish

Dim. in mm

rev.	description	date	name

	date	name
2005		
draw.	Sept. 06	Vincent Ke
appd.		
norm		
d-old		

CONEC®

scale:
material:
title: D-Sub IDC 15p Female Connector with metal shell & 4-40 UNC RoHS compliant
drawing no.: C0509R02A
AutoCAD 2005
DIN A3
sheet 1/1
part no.: DLS2XSSCG04X