Electrical Sector Solutions

Volume 7: Logic Control, Operator Interface and Connectivity Solutions

EATON

Powering Business Worldwide

Volume 1—Residential and Light Commercial 1

Volume 2—Commercial Distribution 2

Volume 3—Power Distribution and Control Assemblies 3

Volume 4—Circuit Protection 4

Volume 5—Motor Control and Protection 5

Volume 6—Solid-State Motor Control 6

Volume 7—Logic Control, Operator Interface and Connectivity Solutions 7

Tab 1—Pushbuttons and Indicating Lights V7-T1-1

Tab 2—Stacklights V7-T2-1

Tab 3—Control Relays and Timers V7-T3-1

Tab 4—PLC, I/O and Communications Products V7-T4-1

Tab 5—Operator Interface Products V7-T5-1

Tab 6—Power Supplies V7-T6-1

Tab 7—Industrial Control Transformers V7-T7-1

Tab 8—Terminal Blocks, Fuse Blocks and Fuse Holders V7-T8-1

Tab 9—Connectivity Solutions V7-T9-1

Appendix 1—Eaton Terms & Conditions V7-A1-1

Appendix 2—Catalog Parent Number Index V7-A2-1

Appendix 3—Alphabetical Product Index V7-A3-1

Copyright

Dimensions, Weights and Ratings

Dimensions, weights and ratings given in this catalog **are approximate and should not be used for construction purposes**. Drawings containing exact dimensions are available upon request. All listed product specifications and ratings are subject to change without notice. Photographs are representative of production units.

Terms and Conditions

All prices and discounts are subject to change without notice. When price changes occur, they are published in Eaton's *Price and Availability Digest* (PAD). All orders accepted by Eaton's Electrical Sector are subject to the general terms and conditions as set forth in Appendix 1—Eaton Terms & Conditions.

Technical and Descriptive Publications

This catalog contains brief technical data for proper selection of products. Further information is available in the form of technical information publications and illustrated brochures. If additional product information is required, contact your local Eaton Products Distributor, call **1-800-525-2000** or visit our website at **www.eaton.com**.

Compliance with Nuclear Regulation 10 CFR 21

Eaton products are sold as commercial grade products not intended for application in facilities or activities licensed by the United States Nuclear Regulatory Commission for atomic purposes, under 10 CFR 21. Further certification will be required for use of these products in a safety-related application in any nuclear facility licensed by the U.S. Nuclear Regulatory Commission.

WARNING

The installation and use of Eaton products should be in accordance with the provisions of the U.S. National Electrical Code® and/or other local codes or industry standards that are pertinent to the particular end use. Installation or use not in accordance with these codes and standards could be hazardous to personnel and/or equipment.

These catalog pages do not purport to cover all details or variations in equipment, nor to provide for every possible contingency to be met in connection with installation, operation or maintenance. Should further information be desired or should particular problems arise which are not covered sufficiently for the purchaser's purposes, the matter should be referred to the local Eaton Products Distributor or Sales Office. The contents of this catalog shall not become part of or modify any prior or existing agreement, commitment or relationship. The sales contract contains the entire obligation of Eaton's Electrical Sector. The warranty contained in the contract between the parties is the sole warranty of Eaton. Any statements contained herein do not create new warranties or modify the existing warranty.

Copyright ©2019 Eaton, All Rights Reserved.

Powering Business Worldwide

Eaton is a global leader in power distribution, power quality, control and automation, and monitoring products.

At Eaton, we believe a reliable, efficient and safe power system is the foundation of every successful enterprise. Through innovative technologies, cutting-edge products and our highly skilled services team, we empower businesses around the world to achieve a powerful advantage.

In addition, Eaton is committed to creating and maintaining powerful customer relationships built on a foundation of excellence. From the products we manufacture to our dedicated customer service and support, we know what's important to you.

Solutions

Eaton takes the complexity out of power systems management with a holistic and strategic approach, leveraging our industry-leading technology, solutions and services. We focus on the following three areas in all we do:

- Reliability—maintain the appropriate level of power continuity without disruption or unexpected downtime
- Efficiency—minimize energy usage, operating costs, equipment footprint and environmental impact
- Safety—identify and mitigate electrical hazards to protect what you value most

Using the Eaton Catalog Library

As we grow, it becomes increasingly difficult to include all products in one or two comprehensive catalogs. Knowing that each user has their specific needs, we have created a library of catalogs for our products that when complete, will contain 15 volumes. Since the volumes will continuously be a work in progress and updated, each volume will stand alone. Refer to our volume directory, MZ08100001E, for a quick glance of where to look for the products you need. The 15 volumes include:

- Volume 1—Residential and Light Commercial (CA08100002E)
- Volume 2—Commercial Distribution (CA08100003E)
- Volume 3—Power Distribution and Control Assemblies (CA08100004E)
- Volume 4—Circuit Protection (CA08100005E)
- Volume 5—Motor Control and Protection (CA08100006E)
- Volume 6—Solid-State Motor Control (CA08100007E)
- Volume 7—Logic Control, Operator Interface and Connectivity Solutions (CA08100008E)
- Volume 8—Sensing Solutions (CA08100010E)
- Volume 9—Original Equipment Manufacturer (CA08100011E)
- Volume 10—Enclosed Control (CA08100012E)
- Volume 11—Vehicle and Commercial Controls (CA08100013E)
- Volume 12—Aftermarket, Renewal Parts and Life Extension Solutions (CA08100014E)
- Volume 13—Counters, Timers and Tachometers (CA08100015E)—Available in electronic format only
- Volume 14—Fuses (CA08100016E)—Available in electronic format only
- Volume 15—Solar Inverters and Electrical Balance of System (CA08100018E)

These volumes are not all-inclusive of every product, but they are meant to be an overview of our product lines. For our full range of product solutions and additional product information, consult Eaton.com/electrical and other catalogs and product guides in our literature library. These references include:

- The Consulting Application Guide (CA08104001E)
- The Eaton Power Quality Product Guide (COR01FYA)

If you don't have the volume that contains the product or information that you are looking for, not to worry. You can access every volume of the catalog library at Eaton.com/electrical in the Literature Library.

By installing our Automatic Tab Updater (ATU), you can be sure you always have the most recent version of each volume and tab.

Icons

Green Leaf

Eaton Green Solutions are products, systems or solutions that represent Eaton benchmarks for environmental performance. The green leaf symbol is our promise that the solution has been reviewed and documented as offering exceptional, industry-leading environmental benefits to customers, consumers and our communities. Though all of Eaton's products and solutions are designed to meet or exceed applicable government standards related to protecting the environment, our products with the Green Leaf designation further provide "exceptional environmental benefit."

Learn Online

When you see the Learn Online icon, go to Eaton.com/electrical and search for the product or training page. There you will find 100-level training courses, podcasts, webcasts or games and puzzles to learn more.

Drawings Online

When you see the Drawings Online icon, go to Eaton.com/electrical and find the products page. There you will find a tab that includes helpful product drawings and illustrations.

Contact Us

If you need additional help, you can find contact information under the Customer Care heading of Eaton.com/electrical.

Pushbuttons and Indicating Lights

10250T Pushbuttons

RMQ-Titan M22 Series

RMQ Compact C22 Series

1.1 Toggle Switches—E10
- Product Description V7-T1-2
- Product Selection V7-T1-4

1.2 Pushbutton Control Stations—Assembled
- Product Description V7-T1-8
- Product Selection V7-T1-10

1.3 16.2 mm Pushbuttons—RMQ-16
- Product Selection Guide V7-T1-25
- Product Selection V7-T1-26

1.4 22.5 mm RMQ-Titan Modular Pushbuttons—M22
- Product Selection Guide V7-T1-42
- Product Selection V7-T1-47

1.5 22.5 mm RMQ Compact Pushbuttons—C22
- Product Selection Guide V7-T1-133
- Product Selection V7-T1-135

1.6 Global Modular 30 mm Pilot Devices—M30 Flat Operators
- Product Description V7-T1-168
- Product Selection V7-T1-172

1.7 Global Compact 30 mm Pilot Devices—C30 Flat with Pigtail
- Product Description V7-T1-186
- Product Selection V7-T1-188

1.8 30.5 mm Square Multifunction Watertight/Oiltight—E30
- Product Description V7-T1-195
- Product Selection V7-T1-197

1.9 30.5 mm Heavy-Duty Watertight/Oiltight—10250T
- Product Description V7-T1-213
- Product Selection V7-T1-217

1.10 30.5 mm Corrosion Resistant Watertight/Oiltight—E34
- Product Description V7-T1-284
- Product Selection V7-T1-290

1.11 30.5 mm Watertight/Oiltight—HT800
- Product Description V7-T1-326
- Product Selection V7-T1-328

1.12 30.5 mm Class I Division 2 Hazardous Locations—10250T/E34
- Product Description V7-T1-351
- Catalog Number Selection V7-T1-353

Toggle Switches—E10

Contents

Description	*Page*
Toggle Switches—E10	
Standards and Certifications	**V7-T1-3**
Catalog Number Selection	**V7-T1-3**
Product Selection	
Toggle Switches	**V7-T1-4**
Hesitation Switches	**V7-T1-5**
Pushbuttons	**V7-T1-5**
Accessories	**V7-T1-5**
Technical Data and Specifications	**V7-T1-6**
Circuit Diagrams	**V7-T1-6**
Dimensions	**V7-T1-7**

Product Description

The E10 switches from Eaton's Electrical Sector are intended for general purpose light industrial use. Designed for retrofit and OEM applications.

Features

General Purpose Toggles

- Various circuit functions include maintained and momentary
- Poles include from single-pole single-throw to four-pole double-throw
- Spade, screw, and solder terminations available
- Numerous ratings
- Short 11/32 in and tall 15/32 in bat lever available
- Standard 15/32–32 thd.
- Hardware furnished assembled

Heavy-Duty Hesitation Switches

- One-hole panel mount
- Three position switch offers unique positive center stop feature to assure lever cannot be thrown from one side through the center OFF position without stopping
  - Design feature is a major acceptance for motor reversing and speed control applications
  - Prevents motor damage resulting from high current generation by counter EMF of the armature at the time of reversing
  - Known as anti-plugging, hesitation, positive stop or positive off switch

Non-Illuminated AC Rated Pushbuttons

- One-hole panel mount
- Medium-duty
- Spade and screw terminations available
- Various bushing lengths and button extensions
- Numerous ampere ratings with horsepower ratings

Standards and Certifications

- UL Recognized
- CSA—File No. LR40068

Catalog Number Selection

Catalog Number Selection is for illustrative purposes only and not to be used to create new catalog numbers.

Toggle Switches—E10 Series

Not to be used for ordering purposes

E10 T 1 06 A S = E10T106AS

Series

Lever Length
- **T** = 0.563 in (14.3 mm) lever
- **E** = 0.688 in (17.5 mm) lever

Poles
- **1** = Single-pole
- **2** = Two-pole
- **3** = Three-pole
- **4** = Four-pole

Ratings—125V
- **06** = 6 Amperes
- **15** = 15 Amperes
- **20** = 20 Amperes

Function
- **A** = ON—None—OFF
- **B** = OFF—None—(ON)
- **D** = ON—OFF—ON
- **E** = ON—None—ON
- **F** = ON—OFF—(ON)
- **G** = (ON)—OFF—(ON)
- **H** = ON—None—(ON)

Termination
- **S** = Screw
- **L** = Solder lug
- **P** = Spade

Complete Cat. No.
- 0.563 in (14.3 mm)
- Single-pole
- 6 Amperes
- ON—None—OFF
- Screw terminal

1

Product Selection

Toggle Switches

E10 Series—AC Rated—Minimum Order Quantity 10 Pieces

Nominal AC Ratings Amperes 125V	250V	hp 50V	Poles and Throw ①	Function—Circuit with Lever In: UP Position	CENTER Position	DOWN Position—Keyway	Screw Terminal Catalog Number	0.250 in (6.4 mm) Spade Terminal Catalog Number	Solder Lug Catalog Number
Single-Pole									
6	3	—	1 P.S.T.	ON	None	OFF	**E10T106AS**	**E10T106AP**	**E10T106AL**
15	10	3/4					**E10T115AS**	**E10T115AP**	**E10T115AL**
20	10	3/4					**E10E120AS**	**E10E120AP**	**E10E120AL**
6	3	—	1 P.D.T.	ON	OFF	ON	**E10T106DS**	**E10T106DP**	—
15	10	3/4					**E10T115DS**	**E10T115DP**	**E10T115DL**
20	10	3/4					**E10E120DS**	—	—
6	3	—	1 P.D.T.	ON	None	ON	**E10T106ES**	—	—
15	10	3/4					**E10T115ES**	**E10T115EP**	**E10T115EL**
20	10	3/4					**E10E120ES**	—	—
—	10	1/2	1 P.S.T.	OFF	None	(ON)	**E10T115BS**	**E10T115BP**	—
			1 P.D.T.	ON	OFF	(ON)	**E10T115FS**	**E10T115FP**	—
			1 P.D.T.	ON	None	(ON)	**E10T115HS**	**E10T115HP**	—
			1 P.D.T.	(ON)	OFF	(ON)	**E10T115GS**	**E10T115GP**	—
Two-Pole									
6	3	—	2 P.S.T.	ON	None	OFF	**E10T206AS**	**E10T206AP**	—
15	10	3/4					**E10T215AS**	**E10T215AP**	**E10T215AL**
20	10	3/4					**E10E220AS**	**E10E220AP**	**E10E220AL**
6	3	—	2. P.D.T.	ON	OFF	ON	**E10T206DS**	**E10T206DP**	—
15	10	3/4					**E10T215DS**	**E10T215DP**	**E10T215DL**
20	10	3/4					**E10E220DS**	**E10E220DP**	—
6	3	—	2 P.D.T.	ON	None	ON	**E10T206ES**	—	—
15	10	3/4					**E10T215ES**	**E10T215EP**	**E10T215EL**
20	10	3/4					**E10E220ES**	—	—
15	10	1/2	2 P.S.T.	OFF	None	(ON)	**E10T215BS**	—	—
			2 P.D.T.	ON	None	(ON)	**E10T215HS**	**E10T215HP**	—
			2 P.D.T.	(ON)	OFF	(ON)	**E10T215GS**	**E10T215GP**	—
Three-Pole									
15	10	3/4	3 P.S.T.	ON	None	OFF	**E10E315AS**	**E10E315AP**	—
			3 P.D.T.	ON	OFF	ON	**E10E315DS**	**E10E315DP**	**E10E315DL**
			3 P.D.T.	ON	None	ON	**E10E315ES**	**E10E315EP**	**E10E315EL**
Four-Pole									
15	10	3/4	4 P.S.T.	ON	None	OFF	**E10E415AS**	—	**E10E415AL**
			4 P.D.T.	ON	OFF	ON	**E10E415DS**	—	**E10E415DL**
			4 P.D.T.	ON	None	ON	**E10E415ES**	—	**E10E415EL**

Single-Pole

Two-Pole

Three-Pole

Four-Pole

Note

① See Circuit Diagrams on **Page V7-T1-6**.

Hesitation Switches

Heavy-Duty Hesitation Switch

E10 Series—Special Purpose—Minimum Order Quantity 10 Pieces

Nominal Ratings Amperes 28 Vdc	125 Vac	250 Vac	hp 250 Vac	Operation	Function—Circuit with Lever In… UP Position	CENTER Position	DOWN Position—Keyway	Poles and Throw ①	Screw Terminal Catalog Number
15	15	10	3/4	Maintained	ON	OFF	ON	2 P.D.T.	**E10E215SS**
								3 P.D.T.	**E10E315SS**
								4 P.D.T.	**E10E415SS**

Pushbuttons

One-Hole Mounted Medium-Duty, Mom. Contact

E10 Series—Minimum Order Quantity 10 Pieces

Nominal Ratings Amperes 125 Vac NO	125 Vac NC	250 Vac NO	250 Vac NC	hp 125–250V	Poles and Throw ①	Contacts	Bushing Length in (mm) Dim. "A"	Button Extension in (mm) Dim. "B"	Typical Maximum Operating Force	Screw Terminal Catalog Number	Spade Terminal 0.250 in (6.4 mm) Catalog Number
6	—	3	—	—	1 P.S.T.	NO	0.69 (17.5)	0.53 (13.5)	0.9 lbs	**E10P106RS**	**E10P106RP**
							0.34 (8.6)	0.25 (6.4)		**E10P106JS**	—
15	—	10	—	1/3	1 P.S.T.	NO	0.69 (17.5)	0.53 (13.5)	0.9 lbs	**E10P115RS**	**E10P115RP**
							0.34 (8.6)	0.25 (6.4)		**E10P115JS**	—
15	10	10	5	1/4 ②	1 P.D.T.	NO, NC	0.69 (17.5)	0.53 (13.5)	1.0 lbs	**E10P115LS**	—

Accessories

Toggle Switches Accessories—Minimum Order Quantity 100 Pieces

Description	Material/Notes	Catalog Number
Hexagon locknut	Zinc-chromate treated steel	**E10TA101**
Knurled face nut	Zinc-chromate treated steel	**E10TA102**
Internal tooth lockwasher	Cadmium plated steel	**E10TA103**
Terminal screws	#6-32 x 3/16 in binding head	**E10TA201**
Spade terminal adapter—0.250 in (6.4 mm)	Assembles to screw terminals	**E10TA202**
ON-OFF indicating plate—vertical orientation	Burnished nickel finish steel	**E10TA301**
OFF-ON indicating plate—horizontal orientation	Burnished nickel finish steel	**E10TA302**
Flip-up guard for toggle switches		**E10TA104**
Fixed shroud for toggle switches		**E10TA105**

E10TA104

E10TA105

Notes

Interlock mechanism prevents operation of lever through the center position until pressure is momentarily relieved.
Designed for control and protection of reversing motors.

① See Circuit Diagrams on **Page V7-T1-6**.

② Rated 1/4 hp at 125V, 1/2 hp at 250V.

Technical Data and Specifications

Toggle Switches

Description	Specification
AC ratings	6–20A, 125 Vac 3–10A, 250 Vac Max. 3/4 hp at 250 Vac
DC ratings	6–20A, 28 Vdc
Electrical life	6,000 cycles make/break at switch ampere rating
Operation	Slow make/slow break mechanism with butt action for AC and low voltage DC applications Maintained and momentary contacts
Poles/throws	1 through 4, single and double throw
Mounting	One hole with threaded 0.468 in-32 bushing and 0.068 x 0.035 in (1.7 x 0.9 mm) deep keyway that serves as anti-rotational feature
Lever lengths	0.563 in (14.3 mm) or 0.688 in (17.5 mm), bright nickel plated
Terminals	Screw, 0.250 in (6.4 mm) spade and solder lug

Hesitation Switches

Description	Specification
Operation	Slow make/slow break mechanism with butt action for AC and low voltage DC applications; maintained contacts; ideal for reversing motor applications; interlock mechanism prevents operation of lever through center position until manual pressure is momentarily relieved
AC ratings	15A, 125 Vac 10A, 250 Vac Max. 3/4 hp at 250 Vac
DC ratings	15A, 28 Vdc
Poles/throws	2, 3 and 4, double throw only
Mounting	Single-pole with threaded 0.468 in-32 bushing and 0.068 x 0.049 in (1.7 x 1.2 mm) deep keyway
Lever length	0.687 in (17.4 mm), stainless steel
Terminals	Screw

Pushbutton Actuators

Description	Specification
AC ratings	6–15A, 125 Vac (NO) 3–10A, 250 Vac (NO) Max. 1/3 hp at 125/250 Vac
Operation	Slow make/slow break mechanism Normally open contacts
Poles/throws	Single, single and double throw
Mounting	One hole with 0.468 in-32 threaded bushing and 0.068 x 0.035 in (1.7 x 0.9 mm) deep keyway Two bushing heights: 11/16 in (17.5 mm) and 11/32 in (8.7 mm)
Button extensions	17/32 in (13.5 mm) and 1/4 in (6.4 mm), bright nickel plated
Terminals	Screw

Circuit Diagrams

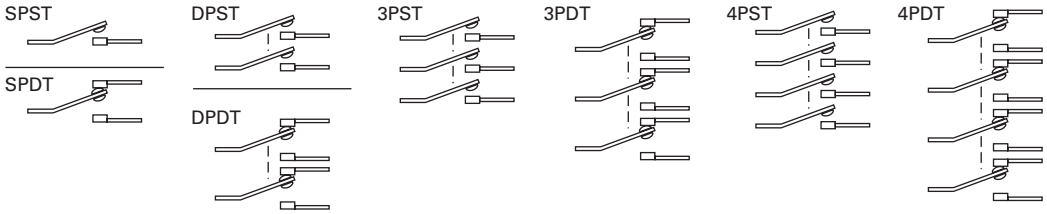

Dimensions

Approximate Dimensions in Inches (mm)

Toggle Switch Dimensions

No. of Poles	Operation	Bushing Length A	Lever Length B	Screw Terminals C	Screw Terminals D	Screw Terminals E	Spade Terminals C ①	Spade Terminals D	Spade Terminals E	Solder Lug C	Solder Lug D	Solder Lug E
1	Momentary and maintained	0.47 (11.9)	0.56 (14.2)	1.00 (25.4)	1.17 (29.7)	0.63 (16.0)	1.13 (28.7)	1.13 (28.7)	0.63 (16.0)	1.00 (25.4)	1.13 (28.7)	0.63 (16.0)
2	Maintained	0.47 (11.9)	0.56 (14.2)	1.06 (26.9)	1.31 (33.3)	0.75 (19.1)	1.19 (30.2)	1.31 (33.3)	0.75 (19.1)	1.06 (26.9)	1.31 (33.3)	0.75 (19.1)
	Momentary	0.47 (11.9)	0.56 (14.2)	1.25 (31.8)	1.31 (33.3)	0.75 (19.1)	1.31 (33.3)	1.31 (33.3)	0.75 (19.1)	1.25 (31.8)	1.31 (33.3)	0.75 (19.1)
3	Maintained	0.47 (11.9)	0.69 (17.5)	1.27 (32.3)	1.34 (34.0)	1.44 (36.6)	1.37 (34.8)	1.34 (34.0)	1.44 (36.6)	1.23 (31.2)	1.34 (34.0)	1.44 (36.6)
4	Maintained	0.47 (11.9)	0.69 (17.5)	1.20 (30.5)	1.30 (33.0)	1.40 (35.6)	1.30 (33.0)	1.34 (34.0)	1.40 (35.6)	1.23 (31.2)	1.34 (34.0)	1.44 (36.6)

Toggle Switch

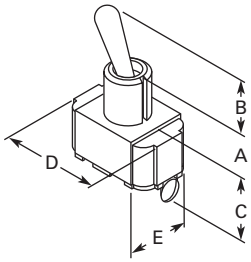

Hesitation Switch

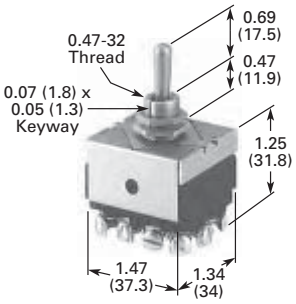

Pushbutton Actuator

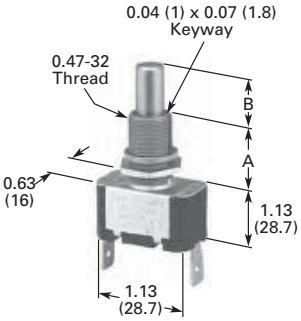

Accessories

E10TA101 Hexagon Locknut

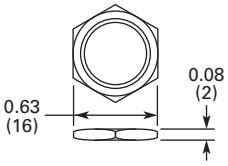

E10TA102 Knurled Face Nut

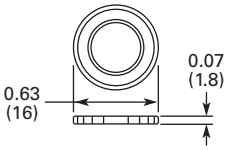

E10TA301 ON-OFF Indicating Plate—Vertical Orientation

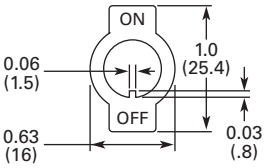

E10TA302 ON-OFF Indicating Plate—Horizontal Orientation

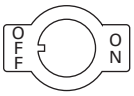

Note

① Spade terminal adapters are used on 6 ampere and momentary screw terminal switches, adding 0.42 in (10.7 mm) to dimension C.

Pushbutton Control Stations

Contents

Description	*Page*
Pushbutton Control Stations—Assembled	
Features	**V7-T1-9**
Product Selection	
M22 Assembled Control Stations	**V7-T1-10**
Commercial Control Stations	**V7-T1-11**
General Purpose Control Stations	**V7-T1-12**
Special Purpose Control Stations	**V7-T1-13**
10250H Series Heavy-Duty Control Stations	**V7-T1-14**
10250T Series Heavy-Duty 30.5 mm Control Stations	**V7-T1-15**
Class I Division 2 10250T Series Heavy-Duty 30.5 mm Control Stations	**V7-T1-16**
Class I Division 2 E34 Series Corrosion Resistant 30.5 mm Control Stations	**V7-T1-17**
Accessories	**V7-T1-17**
Custom Assembled Stations Specification Form	**V7-T1-18**
Renewal Parts	**V7-T1-20**
Technical Data and Specifications	**V7-T1-22**
Dimensions	**V7-T1-22**

Product Description

M22 Assembled Control Stations

- M22 series operators
- Available in horizontal and vertical configurations
- Impact resistant polycarbonate enclosures
- Optional yellow covers
- Base mounting contact blocks and light units for quick wiring and vibration resistance

Commercial Control Stations

- 10250T series operators
- Full front label
- Specific function labels on front of enclosure

General Purpose Control Stations

- Construction grade
- General purpose wall mount
- Popular with contractors
- UL (NEMA) Type 1

Special Purpose Control Stations

- Standard grade
- Polyester enclosure
- UL (NEMA) Type 3, 3R, 4, 4X, 13

10250H Series Heavy-Duty Control Stations

- 10250H Series operators
- Dark brown polyester enclosure
- Protective rubber gaskets provide NEMA 3S rating on pushbuttons
- Top and bottom 3/4 in NPT conduit entrances
- Includes alternate legend plates and spare mounting screws

10250T Series Heavy-Duty 30.5 mm Control Stations

- 10250T Series operators
- ASA 61 gray die-cast zinc enclosures
- Surface or flush mounting
- Single 3/4 in NPT conduit entrance on one and two element stations
- Single 1 in NPT conduit entrance on three element stations

Class I Division 2 10250T Series Heavy-Duty 30.5 mm Control Stations

- 10250T Series operators
- Factory sealed contact blocks
- Die-cast, polyester or stainless steel enclosures
- Approved for NEC Class I Division 2, Groups B, C and D or Class I Zone 2 Group IIB plus Hydrogen type hazardous locations

Class I Division 2 E34 Series Corrosion Resistant 30.5 mm Control Stations

- E34 Series operators
- Factory sealed contact blocks
- Die-cast, polyester or stainless steel enclosures
- Approved for NEC Class I Division 2 Groups B, C and D or Class I Zone 2 Group IIB plus Hydrogen type hazardous locations

Features

M22 Assembled Control Stations

- IP66, UL (NEMA) Type 4X, 13
- Impact resistant polycarbonate enclosures
- Optional yellow cover
- 25% smaller depth than most competitor enclosures
- Base mounting contact blocks and light units for faster wiring and vibration resistance

Commercial Control Stations

- ASA 61 gray die-cast zinc enclosures
- Pre-assembled and labeled for functions such as "Fuel Shut-Off"
- Great for commercial applications

General Purpose Control Stations

- Construction grade
- General purpose wall mount
- Popular with contractors
- UL (NEMA) Type 1

Special Purpose Control Stations

- Standard grade
- Polyester enclosure
- UL (NEMA) Type 3, 3R, 4, 4X, 13

10250H Series Heavy-Duty Control Stations

- Industrial grade
- Extra heavy-duty
- Polyester enclosure
- Booted buttons
- Outdoor installation
- UL (NEMA) Type 3, 3R, 3S, 4, 4X, 12, 13

10250T Series Heavy-Duty 30.5 mm Control Stations

- 30.5 mm operators
- Industrial grade
- Zinc die cast enclosure
- Popular with industrial end users
- UL (NEMA) Type 4, 4X, 12, 13

Class I Division 2 Control Stations

- Available with 10250T or E34 30.5 mm operators
- Zinc die cast, polyester or stainless steel enclosures
- Factory-sealed contact blocks
- Popular with industrial end users
- UL (NEMA) Type 4, 4X, 12, 13
- NEC Class I Division 2 Groups B, C and D

1

Product Selection

M22 Assembled Control Stations

One Element Control Stations

Orientation	Description	Color	①	Inscription	Enclosure Cover Color	Catalog Number
Horizontal	40 mm mushroom head push-pull emergency stop operator	Red	NC	—	Yellow	**M22-C1-M1H**
Horizontal	40 mm illuminated mushroom head push-pull emergency stop operator, 85–264 Vac	Red	NO-NC	—	Yellow	**M22-C1-M2H**
Horizontal	40 mm mushroom head twist-to-release emergency stop operator	Red	NC	—	Yellow	**M22-C1-M3H**
Horizontal	40 mm mushroom head key-release emergency stop operator	Red	NC	—	Yellow	**M22-C1-M4H**
Horizontal	Flush pushbutton	Green	NO	⏽	Gray	**M22-C1-M5H**
Horizontal	Flush pushbutton	Green	NO	START	Gray	**M22-C1-M6H**
Horizontal	Extended pushbutton	Red	NC	◎	Gray	**M22-C1-M7H**
Horizontal	Extended pushbutton	Red	NC	STOP	Gray	**M22-C1-M8H**
Horizontal	Key-operated selector switch, two-position maintained	—	NO	OFF-ON	Gray	**M22-C1-M9H**
Horizontal	Knob type selector switch, three-position maintained	—	2NO	HAND 0 AUTO	Gray	**M22-C1-M10H**
Horizontal	Double pushbutton	Green	NO	START	Gray	**M22-C1-M11H**
		Red	NC	STOP		

Two Element Control Stations

Orientation	Element 1 Description	Color	①	Inscription	Element 2 Description	Color	①	Inscription	Enclosure Cover Color	Catalog Number
Horizontal	Extended pushbutton	Red	NC	◎	Flush pushbutton	Green	NO	⏽	Gray	**M22-C2-M1H**
Vertical	Flush pushbutton	Green	NO	START	Extended pushbutton	Red	NC	STOP	Gray	**M22-C2-M2V**
Vertical	Flush pushbutton	Black	NO	FORWARD	Flush pushbutton	Black	NO	REVERSE	Gray	**M22-C2-M3V**

Three Element Control Stations

Orientation	Element 1 Description	Color	①	Inscription	Element 2 Description	Color	①	Inscription	Element 3 Description	Color	①	Inscription	Enclosure Cover Color	Catalog Number
Horizontal	Extended pushbutton	Red	NC	◎	Indicating light	White	85–264 Vac	—	Flush pushbutton	Green	NO	⏽	Gray	**M22-C3-M1H**
Vertical	Indicating light	White	85–264 Vac	—	Flush pushbutton	Green	NO	START	Extended pushbutton	Red	NC	STOP	Gray	**M22-C3-M2V**
Horizontal	Flush pushbutton	Green	NO	⏽	Extended pushbutton	Red	NC	◎	Flush pushbutton	Green	NO	⏾	Gray	**M22-C3-M3H**
Vertical	Flush pushbutton	Black	NO	OPEN	Extended pushbutton	Red	NC	STOP	Flush pushbutton	Black	NO	CLOSE	Gray	**M22-C3-M4V**
Vertical	Flush pushbutton	Black	NO	FORWARD	Flush pushbutton	Red	NC	STOP	Flush pushbutton	Black	NO	REVERSE	Gray	**M22-C3-M5V**
Vertical	Flush pushbutton	Black	NO	UP	Flush pushbutton	Red	NC	STOP	Flush pushbutton	Black	NO	DOWN	Gray	**M22-C3-M6V**

Notes

For assembled control stations not found in this selection, please contact the Eaton Technical Resource Center at 1-877-ETN CARE (386-2273) or TRC@eaton.com.

① Contact block configuration.

Commercial Control Stations

Key Specifications

- 30.5 mm (10250T series) operators
- ASA 61 gray die-cast zinc enclosures
- Industrial grade
- UL® Type 4, 4X, 12, 13
- Single 3/4 in NPT conduit entrance
- Dimensions—in (mm)
  - Enclosure:
    3.88 W x 4.00 H x 3.00 D
    (98.6 x 101.6 x 76.3)
  - Operator:
    1.63 D (to enclosure) x
    1.50 diameter
    (41.4 x 38.1)

What is included?

Eaton's pre-assembled, enclosed emergency stop pushbutton stations include an operator, an enclosure, contact blocks and a variety of unique labels. Each label has white lettering on a red background indicating the function and red lettering on a white background indicating the operator type.

Available Catalog Numbers

Catalog Number ①	Operator	Enclosure Color	Label
10250T5B62-S101	Push-Pull	Gray	EMERGENCY STOP
10250T5B62-S102	Push-Pull	Gray	EMERGENCY SHUT-OFF
10250T5B62-S103	Push-Pull	Gray	EMERGENCY GENERATOR STOP
10250T5B62-S104	Push-Pull	Gray	EMERGENCY HVAC SHUT-DOWN
10250T5B62-S105	Push-Pull	Gray	EMERGENCY ELECTRICAL DISCONNECT
10250T5B62-S106	Push-Pull	Gray	EMERGENCY BOILER SHUT-DOWN
10250T5B62-S107	Push-Pull	Gray	EMERGENCY CHILLER STOP
10250T5B62-S108	Push-Pull	Gray	EMERGENCY FUEL SHUT-OFF
10250T5B62-S109	Push-Pull	Gray	EMERGENCY REFRIGERATION STOP
10250T5B62-S110	Push-Pull	Gray	EMERGENCY POWER OFF
10250T5B62-S111	Push-Pull	Gray	EMERGENCY GAS SHUT-OFF
10250T5B62-S112	Push-Pull	Gray	EMERGENCY VENTILATION SHUT-DOWN
10250T5B62-S113	Push-Pull	Gray	GENERATOR

Additional Contact Blocks

(Sold Separately)

Catalog Number	Circuit Configuration
10250T51	1NC
10250T53	1NO
10250T1	NO-NC
10250T3	2NC
10250T2	2NO

Note

① Includes 1NO-1NC contact block.

1

General Purpose Control Stations

Type N Control Stations—UL (NEMA) Type 1

	Contact Symbol	Button Type/Color	Legends	Catalog Number
	One Element Enclosure Type			
Single Button Station for Padlock Attachment ①		Flush/green	START	**10250H5100**
		Flush/red	STOP	**10250H5101**
		Extended/red	STOP	**10250H5104**
		Palm operated/black	None	**10250H89** ②
Selector Switch		Three-position selector switch/black knob	RUN/OFF/AUTO	**10250H289** ②
Two Button Station	**Two Element Enclosure Type**			
		Flush/red	START/STOP	**10250H5200**
		Flush/green extended/red	START/STOP	**10250H5207**
		Flush/black (all)	RAISE/LOWER	**10250H5201**
			FOR/REV	**10250H5202**
			OPEN/CLOSE	**10250H5203**
			UP/DOWN	**10250H5204**
			HIGH/LOW	**10250H5205**
			FAST/SLOW	**10250H5208**
Three Button Station	**Three Element Enclosure Type**			
	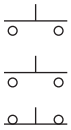	Flush/black (all)	FOR/REV/STOP	**10250H5300**
			UP/DOWN/STOP	**10250H5301**
			RAISE/LOWER/STOP	**10250H5302**
			OPEN/CLOSE/STOP	**10250H5303**
			FAST/SLOW/STOP	**10250H5304**
Three Button Station with Indicating Light	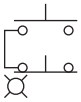	110/220V neon indicating light	START/STOP	
		Clear—flush/green; flush/red		**10250H5310**
		Red—flush/green; flush/red		**10250ED853**
		Amber—flush/green; flush/red		**10250ED853-2**

Notes

① Padlock attachment (10250H5110) must be purchased separately.

② Round button.

Type N Control Stations—Open Type Construction (No Cover)

	Contact Symbol	Button Type/Color	Legends	Catalog Number
Selector Switch	**One Element Enclosure Type**			
		Three-position selector switch/black knob	RUN/OFF/AUTO	**10250H2538**
Two Button Station	**Two Element Enclosure Type**			
		Flush/green	START/STOP	**10250H2747**
Mechanically Interlocked Pushbuttons		Flush/black (all) mech. interlocked	None ①	**10250H2544**

Special Purpose Control Stations

Special Purpose Control Stations—UL (NEMA) Type 3, 3R, 4, 4X, 13

	Contact Symbol	Feature	Legends	Catalog Number
10250H_	**One Element Pushbutton Type**			
		Flush	START	**10250H2738**
			STOP	**10250H658**
		With lock hasp	STOP	**10250H665**
10250H_	**Two Element Pushbutton Type**			
		Flush	START/STOP	**10250H364**
		With lock hasp	START/STOP	**10250H671**
		Buttons interlocked	FAST/SLOW	**10250ED664**
			FOR/REV	**10250H2740**
			UP/DOWN	**10250H2741**
			OPEN/CLOSE	**10250H2742**

Note

① No legend on buttons. Specify any standard legend.

1

10250H Series Heavy-Duty Control Stations

Type H Control Stations—UL (NEMA) Type 3, 3S, 4, 4X, 12, 13

	Element Type		Feature	Circuit	Assembled Legend Plate	Unassembled Alternate Legend Plate		Catalog Number
10250H_	**One Element**							
	Pushbuttons		Without padlock hasp	1NO-1NC	JOG	START		**10250H1881**
						STOP		
						RUN		
			With padlock hasp	1NC	STOP	—		**10250H4239**
	Knob selector switch		Two-position	1NO-1NC	OFF/ON	—		**10250H4526**
			Three-position	1NO-1NC	MAN/OFF/AUTO	—		**10250H4527**
10250H_	**Two Element**							
	Pushbuttons		Standard	1NO-2NC	START/STOP	—		**10250H1884**
				2NO-2NC	RAISE/LOWER	FORWARD		**10250H1885**
						REVERSE		
						OPEN		
						CLOSE		
			Standard and standard with padlock hasp	1NO-2NC	START/STOP	—		**10250H4240**
10250H_	**Three Element**							
	Pushbuttons		Standard	2NO-3NC	FOR/REV/STOP	START	OPEN	**10250H1890**
			Two standard and standard with padlock hasp			JOG	CLOSE	**10250H4241**
						RAISE	FAST	
						LOWER	SLOW	
	Indicating light and pushbuttons	120V	Light-red lens and two plain	1NO-2NC	MOTOR RUNNING START/STOP	—		**10250H1913**

10250T Series Heavy-Duty 30.5 mm Control Stations

Complete Assembled Stations—UL (NEMA) Type 4, 4X, 12, 13

	Element Type ①	Features	Contact Block(s)	Legend	Surface Mounting Catalog Number	Flush Mounting ② Catalog Number
Break Glass Station	**Break Glass Station**					
	Break glass station ③	Gray enclosure	NC (logic level)	EMERG. OFF	**10250TGS**	—
		Red enclosure			**10250TGR**	—
One Element	**One Element**					
	Pushbutton	Standard	NO-NC	START	**10250T3516**	**10250T3573**
			NC	STOP	**10250T3518**	**10250T3575**
			NO-NC	None	**10250T3540**	**10250T3597**
		Mushroom head	NO-NC	START	**10250T3517**	**10250T3574**
			NC	STOP	**10250T3519**	**10250T3576**
		With lock hasp ④	NC	STOP	**10250T3520**	**10250T3577**
	Selector switch	Two-position black knob	NO-NC	OFF/ON	**10250T3523**	**10250T3580**
		Three-position black knob	2NO	MAN/OFF/AUTO	**10250T3524**	**10250T3581**
	Push-pull three-position	Momentary red button	2NC	START/STOP	**10250T3545**	**10250T3602**
Two Element	**Two Element**					
	Pushbuttons	Standard	1NO-2NC	START/STOP	**10250T3525**	**10250T3582**
			2NO-2NC	RAISE/LOWER	**10250T3672**	**10250T3673**
			2NO-2NC	None	**10250T3541**	**10250T3598**
		With lock hasp ④	1NO-2NC	START/STOP	**10250T3542**	**10250T3599**
		Standard and mushroom head	1NO-2NC	START/STOP	**10250T3526**	**10250T3583**
		Standard with maintained contact ⑤	NO-NC Plus NC	START/STOP	**10250T3528**	**10250T3585**
Three Element	**Three Element**					
	Pushbuttons	Standard	2NO-3NC	FOR, REV, STOP	**10250T3532**	**10250T3589**
			2NO-3NC	UP, DOWN, STOP	**10250T3615**	—
			2NO-3NC	OPEN, CLOSE, STOP	**10250T3614**	—
			2NO-3NC	None, None, STOP	**10250T3543**	**10250T3600**
		Two standard and with lock hasp	2NO-3NC	None, None, STOP	**10250T3544**	**10250T3601**
	Indicating light (transformer type) and pushbuttons	Red lens — 120V	1NO-2NC	MOTOR RUN, START/STOP	**10250T3536**	**10250T3593**
		Red lens — 240V			**10250T3537**	**10250T3594**
		Red lens — 480V			**10250T3538**	**10250T3595**
		Red lens — 600V			**10250T3539**	**10250T3596**

Break Glass Operator ⑥

Break Glass Kit

Description	Catalog Number
Operator with hammer and five glass discs	**10250TBG**
Glass discs only (5)	**10250TGL**

Notes

① Stop buttons are red—all others are black.
② NEMA 4–13, if properly mounted on a flat surface. Consists of front plate, legend, operator and contact blocks.
③ Break glass stations will not function with Normally Open contact blocks.
④ Lock is 10250TA2.
⑤ Uses deep cover instead of shallow cover. Switch component is 10250TA67—mechanically interlocked operators.
⑥ Shown assembled to contact block (contact block supplied separately).

1

Class I Division 2 10250T Series Heavy-Duty 30.5 mm Control Stations

Complete Assembled Stations—
UL (NEMA) Type 4, 4X, 12, 13; NEC Class I Division 2, Groups B, C and D

10250T7007

10250T7023P

10250T7033S

Contact Symbol	Button Type/Color	Legend Marking	Die Cast Enclosure Catalog Number	Polyester Molded Enclosure Catalog Number	Stainless Steel Enclosure Catalog Number
Single Pushbutton					
1NO 1NC	Flush/green	START	**10250T7003**	**10250T7003P**	**10250T7003S**
	Extended/red	STOP	**10250T7005**	**10250T7005P**	**10250T7005S**
	Alum. jumbo mushroom/red	EMER. STOP (engraved button)	**10250T7007**	**10250T7007P**	**10250T7007S**
	Flush/black	No legend	**10250T7009**	**10250T7009P**	**10250T7009S**
Two Pushbuttons					
1NO 1NC Each Button	Flush/green	START	**10250T7023**	**10250T7023P**	**10250T7023S**
	Extended/red	STOP			
	Flush/black	No legend	**10250T7025**	**10250T7025P**	**10250T7025S**
	Flush/black	No legend			
Single Pilot Light—Two Pushbuttons					
1NO 1NC Each Button	120 Vac red	No legend	**10250T7033**	**10250T7033P**	**10250T7033S**
	Flush/green	START			
	Extended/red	STOP			
	120 Vac red	No legend	**10250T7035**	**10250T7035P**	**10250T7035S**
	Flush/black				
	Flush/black				
Three-Position Selector Switch					
2NO 2NC	Maintained knob/black	HAND/OFF/AUTO	**10250T7011**	**10250T7011P**	**10250T7011S**
	Maintained knob/black	No legend	**10250T7013**	**10250T7013P**	**10250T7013S**
Single Pushbutton Maintained					
Pull Push O X 1NO X O 1NC	Push-pull with jumbo mushroom/red	EMER. STOP (engraved button)	**10250T7019**	**10250T7019P**	**10250T7019S**

Class I Division 2 E34 Series Corrosion Resistant 30.5 mm Control Stations

E34EX_

Complete Assembled Stations— UL (NEMA) Type 4, 4X, 12, 13; NEC Class I Division 2, Groups B, C and D

Contact Symbol	Button Type/Color	Legend Marking	Die Cast Enclosure Catalog Number	Polyester Molded Enclosure Catalog Number	Stainless Steel Enclosure Catalog Number
Single Pushbutton					
1NO 1NC	Flush/green	START	**E34EX7003**	**E34EX7003P**	**E34EX7003S**
	Extended/red	STOP	**E34EX7005**	**E34EX7005P**	**E34EX7005S**
	Alum. jumbo mushroom/red	EMER. STOP (engraved button)	**E34EX7007**	**E34EX7007P**	**E34EX7007S**
	Flush/black	No legend	**E34EX7009**	**E34EX7009P**	**E34EX7009S**
Two Pushbuttons					
1NO 1NC Each Button	Flush/green	START	**E34EX7023**	**E34EX7023P**	**E34EX7023S**
	Extended/red	STOP			
	Flush/black	No legend	**E34EX7025**	**E34EX7025P**	**E34EX7025S**
	Flush/black	No legend			
Three-Position Selector Switch					
2NO 2NC	Maintained knob/black	HAND/OFF/AUTO	**E34EX7011**	**E34EX7011P**	**E34EX7011S**
	Maintained knob/black	No legend	**E34EX7013**	**E34EX7013P**	**E34EX7013S**
Single Pushbutton Maintained					
Pull Push O X 1NO X O 1NC	Push-pull with jumbo mushroom/red	EMER. STOP (engraved button)	**E34EX7019**	**E34EX7019P**	**E34EX7019S**

Accessories

Padlock Attachment

Type N Control Stations

Description	Catalog Number
Padlock attachment—For field assembly on square button type (except extended button types)	**10250H5110**

Note

Use NEMA 4X 10250T operators where exposed to ultraviolet light, see **Page V7-T1-16**.

1

Custom Assembled Stations Specification Form

Ordering Instructions

Step 1

Copy this ordering guide from catalog.

Step 2

Specify 10250T or E34 pushbutton lines in the corresponding box on the following page.

10250T	**Pages V7-T1-213** to **V7-T1-283**
E34	**Pages V7-T1-284** to **V7-T1-325**
10250T and E34 Class I Div. 2	**Pages V7-T1-351** to **V7-T1-391**

Step 3

Check back of panel dimensions—specify single or double depth enclosure in the corresponding box on the following page.

Step 4

Specify enclosure catalog number and price in the corresponding box on the following page. Enclosures can be found on **Pages V7-T1-110**, **V7-T1-263** and **V7-T1-313**. For pricing, reference the most recent PAD or VISTA-line.

Step 5

Specify catalog numbers for desired operator, legend plate, light unit, accessory and contact block(s) for each location in the enclosure in the corresponding box on the following page. (See position locations on this page.)

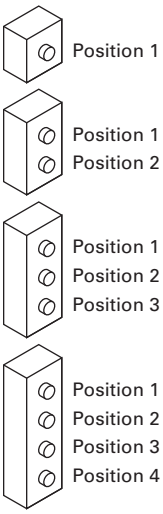

Position Locations

Step 6

For non-standard legends, specify legend desired, letter size and location on the layout sketches on the following page. For limitations see **Page V7-T1-262**. For pricing, use the blank legend catalog number and "STAMP" Suffix (Ex.: **10250TS36STAMP**) and reference the most recent PAD or VISTA-line.

Example: 10250TS36

Special
Legend
for Position #_____

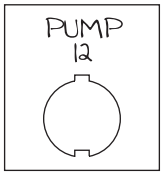

LETTER SIZE

3/32 in	
1/8 in	✔
3/16 in	

Step 7

Fax Sheet 2 of this form to Eaton's TRC, Technical Resource Center, at 828-651-0549 to the attention of—**Custom Stations Order** or email to TRC@eaton.com.

Within a few days you will receive a confirmation fax with the custom station part number and price.

Step 8

Place your order over the VISTA System.

For Selector and Roto-Push Operators

10250T or E34

For single contact blocks or 1NO-1NC contact blocks, the mounting position of contacts must be specified. For example: If a 1NO-1NC contact block is required, specify if NO is to be mounted in Top A position or Bottom B position.

To — **Eaton's TRC, Custom Station Order**
(828) 651-0549 FAX, or email to TRC@eaton.com

From — Customer Name _____
Customer Contact _____
Phone Number _____
Fax Number _____
Email Address _____

FACTORY USE ONLY	
Part Number	
Product Code	
Suffix	
Date	
Engineer	

Step 2)

10250T ❑ **STD** ❑ **Class I Division 2**
E34 ❑ **STD** ❑ **Class I Division 2**

Step 3)

	✔
Single Depth Enclosure	
Double Depth Enclosure	

Step 4)

Enclosure Catalog Number	Price

Step 5)

Position	Operator	Price U.S. $	Light Unit	Price U.S. $	Contact Block	Price U.S. $	A/L	B/R	Contact Block	Price U.S. $	A/L	B/R	Total Price
1													
2													
3													
4													

Position	Legend Plate	Price U.S. $	Lens or Caps	Price U.S. $	Accessory	Price U.S. $	Total Price
1							
2							
3							
4							

Total:

10% Adder for Assembled Stations

Step 6) Non-standard Legends

Special Legend for Position #_____

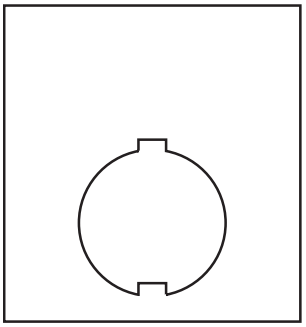

LETTER SIZE	✔
3/32 inch (2.4 mm)	
1/8 inch (3.2 mm)	
3/16 inch (4.8 mm)	

Special Legend for Position #_____

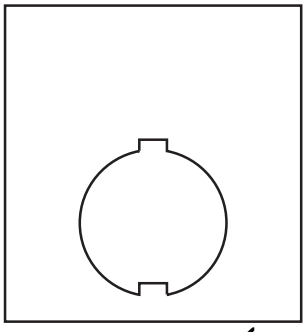

LETTER SIZE	✔
3/32 inch (2.4 mm)	
1/8 inch (3.2 mm)	
3/16 inch (4.8 mm)	

Special Legend for Position #_____

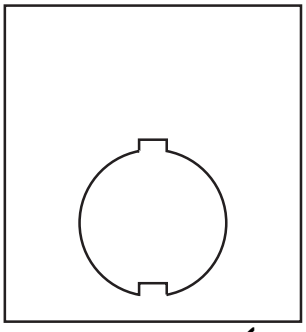

LETTER SIZE	✔
3/32 inch (2.4 mm)	
1/8 inch (3.2 mm)	
3/16 inch (4.8 mm)	

1

Renewal Parts

Type N Renewal Parts

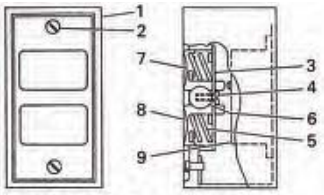

One and Two Element Station

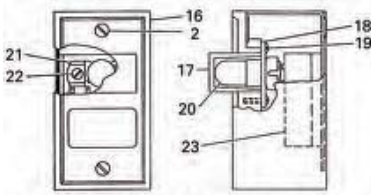

One Element Indicating Light

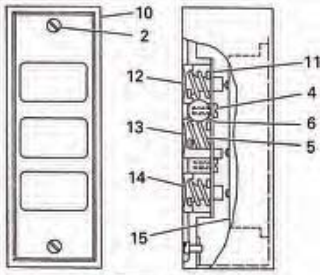

Three Element Station

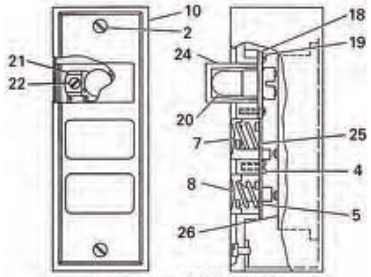

Two Element Station with Indicating Light

Open Type Two Element

Assembled Stations—Type N

Item No.	Description	No. Req.	Part Number
Type N—Square Buttons			
1	Cover	1	
	Two element		**49-3524**
	One element—top button		**49-3524-2**
	One element—bottom button		**49-3524-3**
2	Cover screw	2	**11-2168**
3	Pushbutton support bracket	1	**79-6649**
4	Pushbutton support bracket screw	1	**11-2090**
5	Pushbutton spring	2	**69-2571**
6	Disc (when used—two element assembly)	2	**16-1960**
7	Pushbutton—top position	1	
	START/green		**53-1169-3**
	RAISE/black		**53-1169-66**
	FORWARD/black		**53-1169-7**
	OPEN/black		**53-1169-9**
	UP/blank		**53-1169-11**
	Blank/green		**53-1169**
8	Pushbutton—bottom position	1	
	STOP/red		**53-1202-2**
	Extended STOP/red		**53-1202-5**
	REVERSE/black		**53-1169-8**
	CLOSE/black		**53-1169-10**
	DOWN/black		**53-1169-12**
	LOWER/black		**53-1169-6**
	Blank/red		**53-1202**

Item No.	Description	No. Req.	Part Number
Type N—Square Buttons, continued			
9	Pushbutton element	1	
	1NO-1NC		**86-2588**
	2NO		**86-2588-2**
	1NO		**86-2588-3**
	1NC		**86-2588-4**
10	Cover	1	**49-3464**
11	Pushbutton support bracket	1	**79-6650**
12	Pushbutton—top position	1	
	FORWARD/black		**53-1170-7**
	UP/black		**53-1170-4**
	RAISE/black		**53-1170-5**
	OPEN/black		**53-1170-9**
	FAST/black		**53-1170-6**
13	Pushbutton middle position	1	
	REVERSE/black		**53-1169-15**
	DOWN/black		**53-1169-18**
	LOWER/black		**53-1169-16**
	CLOSE/black		**53-1169-17**
	SLOW/black		**53-1169-13**
14	Pushbutton—bottom position	1	
	STOP/red		**53-1201-2**
15	Pushbutton element	1	
	2NO-3NC		**86-2593**
16	Cover	1	**49-3524-4**

Assembled Stations—Type N, continued

Item No.	Description	No. Req.	Part Number
Type N—Square Buttons, continued			
17	Lens	1	
	Clear		**28-494**
	Red		**28-887-2**
	Amber		**28-887-3**
18	Shield	1	**73-1337**
19	Shield screws	4	**11-2012**
20	Lamp (neon NE48)	1	**28-494**
21	Lamp receptacle	1	**28-902**
22	Lamp receptacle screw	1	**911-330F1**
23	Pilot light terminal base	1	**86-2586**
24	Lens	1	
	Clear		**28-887**
	Red		**28-887-2**
	Amber		**28-887-3**
25	Pushbutton support bracket	1	**79-6650-2**
26	Pushbutton element	1	
	1NO-1NC		**86-2594**

Item No.	Description	No. Req.	Part Number
Type N—Round Buttons			
Similar to 27	Pushbutton assembly and element for:		
	10250H289	1	**10250H2538**
	10250H364	1	**86-353**
	10250H685	1	**86-353-8**
	10250H665	1	**86-353-8**
	10250H671	1	**86-353**
	10250H2738	1	**86-353-3**
	10250H2740	1	**86-356**
	10250H2741	1	**86-356**
	10250H2742	1	**86-356**

Type H Renewal Parts

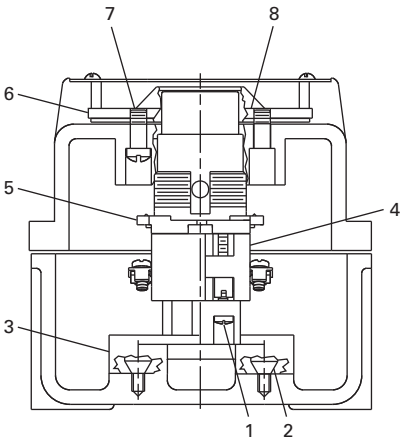

Pushbutton

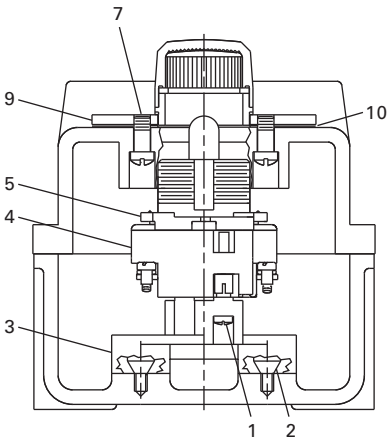

Indicating Light

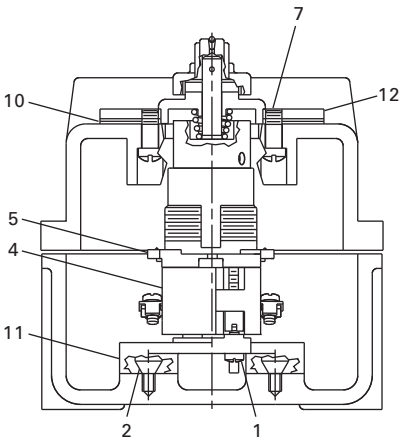

Selector Switch

Assembled Stations—Type H

Item No.	Description	No. Req.	Part Number
Type H—Assembled Stations			
1	Screw	2	**11-4654**
2	Screw	2	**11-5719**
3	Base	1	**17-16560**
4	Contact blocks	See **Page V7-T1-265**	
5	10250T operator	See **Pages V7-T1-219** to **V7-T1-255**	
6	Mounting plate	1	**17-19524**

Item No.	Description	No. Req.	Part Number
Type H—Assembled Stations			
7	Screw	4	**11-953**
8	Diaphragm	1	**32-253-2**
9	Mounting plate	1	**17-19522**
10	Gasket	1	**32-254**
11	Base	1	**17-16561**
12	Mounting plate	1	**17-19523**

1

Technical Data and Specifications

Ratings

Maximum Ampere Ratings for Type N Control Stations

	Volts AC				Volts DC		
Description	**110**	**220**	**440**	**550**	**120**	**240**	**600**
Make and emergency interrupt capacity	30	15	7.5	6	1.0	0.5	0.1
Normal load break	3	1.5	0.75	0.6	1.0	0.5	0.1
Continuous current	10	10	10	10	10	10	10

Maximum Ampere Ratings for Type H Control Stations

	Volts AC 50/60 Hz				Volts DC	
Description	**120**	**240**	**480**	**600**	**125**	**250**
Make and emergency interrupt capacity	60	30	15	12	1.1	0.55
Normal load break	6	3	1.5	1.2	1.1	0.55
Continuous amperes	10	10	10	10	10	10
Voltamperes —						
Make and emergency interrupt capacity	7200	7200	7200	7200	138	138
Normal load break	720	720	720	720	138	138

Dimensions

Approximate Dimensions in Inches (mm)

Type N Control Stations

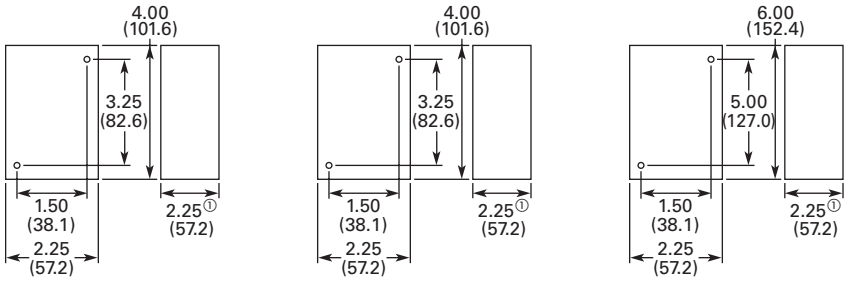

Single Button Station ***Two Button Station*** ***Three Button Station***

Special Purpose Control Stations

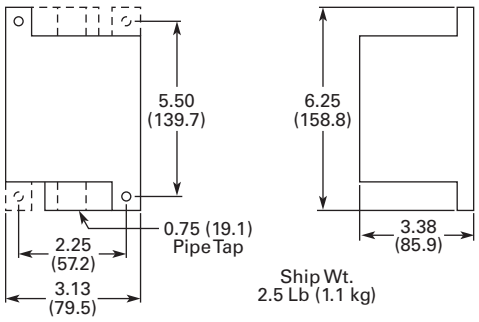

Note

① 2.38 (60.5) for neon indicating light.

Approximate Dimensions in Inches (mm)

Type H Control Stations

NEMA Type 3, 3R, 3S, 4, 4X, 13

No. of Elements	Dimensions Wide	High	Deep
1 and 2	4.50 (114.3)	8.25 (209.6)	4.50 (114.3)
3	4.50 (114.3)	10.75 (273.1)	4.25 (108.0)

10250T and E34

Approximate Enclosure Dimensions

Number of Elements	Surface Mounting Dimensions in In (mm) Wide A	High B	Deep C	Mounting D	E	Conduit Entrance
Cast						
1	3.88 (98.6)	4.00 (101.6)	3.00 (76.3)	2.69 (68.3)	3.25 (82.6)	3/4
2	3.88 (98.6)	5.88 (149.4)	3.00 (76.3)	2.69 (68.3)	5.13 (130.3)	3/4
3	3.88 (98.6)	7.75 (196.9)	3.00 (76.3)	2.69 (68.3)	7.00 (177.8)	1
4	33.88 (98.6)	9.63 (244.6)	3.00 (76.3)	2.69 (68.3)	8.88 (225.6)	1
Polyester						
1	3.81 (96.8)	6.63 (168.4)	3.38 (85.9)	2.94 (74.7)	4.88 (124.0)	①
2	3.81 (96.8)	6.63 (168.4)	3.38 (85.9)	2.94 (74.7)	4.88 (124.0)	①
3	3.81 (96.8)	8.88 (225.6)	3.38 (85.9)	2.94 (74.7)	7.13 (181.1)	①
4	3.81 (96.8)	6.63 (168.4)	3.38 (85.9)	2.94 (74.7)	4.88 (124.0)	①
Stainless Steel						
1	3.00 (76.2)	3.50 (88.9)	3.00 (76.2)	1.50 (38.1)	4.25 (108.0)	①
2	3.50 (88.9)	6.75 (171.5)	3.00 (76.2)	1.50 (38.1)	7.50 (190.5)	①
3	3.50 (88.9)	9.00 (228.6)	3.00 (76.2)	1.50 (38.1)	9.00 (228.6)	①
4	3.50 (88.9)	11.25 (285.8)	3.00 (76.2)	1.50 (38.1)	12.00 (304.8)	①

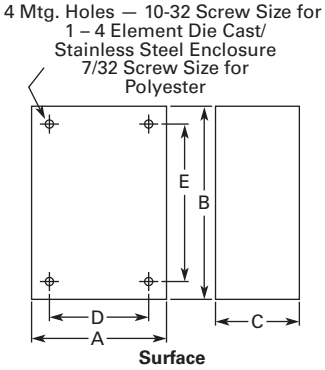

Note

① No conduit entrance holes provided. Drill as required.

16.2 mm Pushbuttons—RMQ-16

Contents

Description	*Page*
16.2 mm Pushbuttons—RMQ-16	
Product Selection Guide	**V7-T1-25**
Pushbuttons—Non-Illuminated and Illuminated	**V7-T1-26**
Indicating Lights	**V7-T1-28**
Emergency Stops	**V7-T1-29**
Selector Switches—Non-Illuminated, Illuminated and Keyed	**V7-T1-30**
Accessories	**V7-T1-34**
Technical Data and Specifications	**V7-T1-37**
Dimensions	**V7-T1-39**

Product Overview

Product Description

The RMQ-16 pushbutton line offers a wide array of functional and attractively designed illuminated and non-illuminated pushbuttons, selector switches, emergency stops and indicating lights. The illuminated line is offered with either incandescent or LED. RMQ-16 devices are designed with two front-of-panel operator sizes. The 18 x 18 mm or 25 x 25 mm square operators can help the user achieve over three times the information density compared with 22 mm ranges.

Features

- *Wide product breadth*: RMQ-16 offers illuminated and non-illuminated pushbuttons, keyed, non-keyed, and illuminated selector switches, emergency stops, and a large variety of accessories
- *Custom laser etching*: Hundreds of standard markings available in addition to infinite possible custom images with laser etching
- *High durability*: Pushbuttons and selector switches rated for 3 million mechanical operations
- *High information density*: Square operators (18 mm or 25 mm) allow for side-by-side mounting and achieve over three times the information density of typical 22 mm installations
- Laser etched operators
- Heavy-duty construction with IP65 on front of panel operators
- LED or incandescent illumination available
- Front-of-panel operators available in either 18 x 18 mm or 25 x 25 mm sizes
- Safety rated emergency stops (IEC 60947-5, positively driven contacts)
- Mounting diameter 16.2 mm to EN 50007

Standards and Certifications

- UL Listed
- CSA Certified
- IEC/EN 60947-5 VDE-0660
- IP65

Product Selection Guide

Pushbuttons

Description	Non-Illuminated	Illuminated
Product Selection	**Page V7-T1-26**	**Page V7-T1-27**

Indicating Lights

Description	Flush	Extended
Product Selection	**Page V7-T1-28**	**Page V7-T1-28**

Emergency Stops

Description	Non-Illuminated	Illuminated
Product Selection	**Page V7-T1-29**	**Page V7-T1-29**

Selector Switches

Description	Non-Illuminated	Illuminated	Keyed
Product Selection	**Page V7-T1-30**	**Page V7-T1-31**	**Page V7-T1-32**

1

Pushbuttons—Non-Illuminated and Illuminated

Catalog Number Selection

Catalog Number Selection is for illustrative purposes only and not to be used to create new catalog numbers.

Pushbuttons—Non-Illuminated and Illuminated

Q 18 – DR – BL / WB

Face Plate
18 = 18 x 18 mm
25 = 25 x 25 mm

Operator Type
D = Non-illuminated momentary
DR = Non-illuminated maintained
LT = Illuminated momentary
LTR = Illuminated maintained

Button Plate	
GN = Green	**BL** = Blue
RT = Red	**GE** = Yellow
SW = Black	**X** = Without
WS = White	

Bulb
WB = With incandescent bulb 24V

Product Selection

Non-Illuminated Pushbuttons

- Momentary or maintained
- Customizable laser etched pushbutton operators
- 18 mm or 25 mm square operator
- 3 million mechanical operations
- IEC/EN 60947-5
- IP65

Q18-D-GN

Non-Illuminated Pushbuttons

Type	Button Color	Catalog Number 18 x 18 mm	25 x 25 mm
Momentary	Green	**Q18D-GN**	**Q25D-GN**
	Red	**Q18D-RT**	**Q25D-RT**
	Black	**Q18D-SW**	**Q25D-SW**
	White	**Q18D-WS**	**Q25D-WS**
	Blue	**Q18D-BL**	**Q25D-BL**
	Yellow	**Q18D-GE**	**Q25D-GE**
	Without	**Q18D-X** ①	**Q25D-X** ①
Maintained	Green	**Q18DR-GN**	**Q25DR-GN**
	Red	**Q18DR-RT**	**Q25DR-RT**
	Black	**Q18DR-SW**	**Q25DR-SW**
	White	**Q18DR-WS**	**Q25DR-WS**
	Blue	**Q18DR-BL**	**Q25DR-BL**
	Yellow	**Q18DR-GE**	**Q25DR-GE**
	Without	**Q18DR-X** ①	**Q25DR-X** ①

Note

① To order separate button plates, see **Page V7-T1-36**.

Illuminated Pushbuttons

- Momentary or maintained
- LED or incandescent
- 18 mm or 25 mm square operator
- 3 million mechanical operations
- IEC/EN 60947-5
- IP65

Q18-LT-GE

Illuminated Pushbuttons Without Bulb ①

Type	Button Color	Catalog Number ② 18 x 18 mm	25 x 25 mm
Momentary	Green	**Q18LT-GN**	**Q25LT-GN**
	Red	**Q18LT-RT**	**Q25LT-RT**
	Black	**Q18LT-SW**	**Q25LT-SW**
	White	**Q18LT-WS**	**Q25LT-WS**
	Blue	**Q18LT-BL**	**Q25LT-BL**
	Yellow	**Q18LT-GE**	**Q25LT-GE**
Maintained	Green	**Q18LTR-GN**	**Q25LTR-GN**
	Red	**Q18LTR-RT**	**Q25LTR-RT**
	Black	**Q18LTR-SW**	**Q25LTR-SW**
	White	**Q18LTR-WS**	**Q25LTR-WS**
	Blue	**Q18LTR-BL**	**Q25LTR-BL**
	Yellow	**Q18LTR-GE**	**Q25LTR-GE**

Notes

① To order with incandescent 24V bulb, insert a **/WB** at the end of the catalog number. Example, Q18LT-GN**/WB**.

② For a complete selection of incandescent 24V bulbs and LEDs, see **Page V7-T1-34**.

1

Indicating Lights

Catalog Number Selection

Catalog Number Selection is for illustrative purposes only and not to be used to create new catalog numbers.

Indicating Lights—Flush and Extended

Q 18 – LF – WS / WB

Face Plate
18 = 18 x 18 mm
25 = 25 x 25 mm

Bezel
LF = Flush indicator light
LH = Extended indicator light

Button Plate	
GN = Green	**BL** = Blue
RT = Red	**GE** = Yellow
WS = White	

Bulb
WB = With incandescent bulb 24V

Product Selection

Indicating Lights

- LED or incandescent
- Flush and extended lenses
- 18 mm or 25 mm square operator
- 3 million mechanical operations
- IEC/EN 60947-5
- IP65

Indicating Lights Without Bulb ①

Q18-LF-GE

Q18-LH-BL

Type	Button Color	Catalog Number ② 18 x 18 mm	25 x 25 mm
Flush	Green	**Q18LF-GN**	**Q25LF-GN**
	Red	**Q18LF-RT**	**Q25LF-RT**
	White	**Q18LF-WS**	**Q25LF-WS**
	Blue	**Q18LF-BL**	**Q25LF-BL**
	Yellow	**Q18LF-GE**	**Q25LF-GE**
Extended.	Green	**Q18LH-GN**	**Q25LH-GN**
	Red	**Q18LH-RT**	**Q25LH-RT**
	White	**Q18LH-WS**	**Q25LH-WS**
	Blue	**Q18LH-BL**	**Q25LH-BL**
	Yellow	**Q18LH-GE**	**Q25LH-GE**

Notes

① To order with incandescent 24V bulb, insert a **/WB** at the end of the catalog number. Example, Q18-LF-GN**/WB**.

② For a complete selection of incandescent 24V bulbs and LEDs, see **Page V7-T1-34**.

Emergency Stops

Catalog Number Selection

Catalog Number Selection is for illustrative purposes only and not to be used to create new catalog numbers.

Emergency Stops—Non-Illuminated and Illuminated

Q 25 – LPV – S

Face Plate
25 = 25 x 25 mm

Operator Type
PV = Emergency stop
LPV = Emergency stop (illuminated)

Color
Blank = Red
S = Black

Product Selection

Emergency Stops

- Push/pull operation
- Illuminated or non-illuminated
- Emergency stop (red) or Machine stop (black) available
- Suitable for use in safety applications
- IEC/EN 60947-5
- IP65

Q25PV

Emergency Stops—Non-Illuminated

Button Color	Catalog Number 25 x 25 mm
Red	**Q25PV**
Black	**Q25PV-S**

Q25LPV

Emergency Stops—Illuminated ①

Button Color	Catalog Number 25 x 25 mm
Red	**Q25LPV**
Black	**Q25LPV-S**

Note

① Includes built-in multiple LED 24 Vdc.

1

Selector Switches—Non-Illuminated, Illuminated and Keyed

Catalog Number Selection

Catalog Number Selection is for illustrative purposes only and not to be used to create new catalog numbers.

Selector Switches—Non-Illuminated

Q 18 – WK1R

Face Plate
18 = 18 x 18 mm
25 = 25 x 25 mm

Selector Positions	
WK1 =	Two positions momentary
WK3 =	Three positions momentary
WK1R =	Two positions maintained
WK3R =	Three positions maintained
WK3R1 =	Three positions maintained/momentary
WK3R2 =	Three positions momentary/maintained

Product Selection

Non-Illuminated Selector Switches

- Momentary or maintained
- 18 mm or 25 mm square operator
- VS Anti-rotation feature
- 3 million mechanical operations
- IP65

Q18WK1

Selector Switches—Non-Illuminated

Function	Position	Switch Position	Catalog Number 18 x 18 mm	25 x 25 mm
Momentary	2		**Q18WK1**	**Q25WK1**
Maintained			**Q18WK1R**	**Q25WK1R**
Momentary	3		**Q18WK3**	**Q25WK3**
Maintained			**Q18WK3R**	**Q25WK3R**
Maintained/momentary			**Q18WK3R1**	**Q25WK3R1**
Momentary/maintained			**Q18WK3R2**	**Q25WK3R2**

Catalog Number Selection

Catalog Number Selection is for illustrative purposes only and not to be used to create new catalog numbers.

Selector Switches—Illuminated

Q 18 – LWK1 – WS / WB

Face Plate
18 = 18 x 18 mm
25 = 25 x 25 mm

Switch Positions	
LWK1 =	Two positions momentary
LWK3 =	Three positions momentary
LWK1R =	Two positions maintained
LWK3R =	Three positions maintained
LWK3R1 =	Three positions maintained/momentary
LWK3R2 =	Three positions momentary/maintained

Button Plate	
GN = Green	**WS** = White
RT = Red	

Bulb
WB = With incandescent bulb 24V

Product Selection

Illuminated Selector Switches

- LED or incandescent
- Momentary or maintained
- 18 mm or 25 mm square operator
- VS Anti-rotation feature
- 3 million mechanical operations
- IP65

Q18LWK1-GN

Selector Switches—Illuminated without Bulb ①

Function	Position	Button Color	Switch Position	Catalog Number ② 18 x 18 mm	25 x 25 mm
Momentary	2	Green		**Q18LWK1-GN**	**Q25LWK1-GN**
		Red		**Q18LWK1-RT**	**Q25LWK1-RT**
		White		**Q18LWK1-WS**	**Q25LWK1-WS**
Maintained		Green		**Q18LWK1R-GN**	**Q25LWK1R-GN**
		Red		**Q18LWK1R-RT**	**Q25LWK1R-RT**
		White		**Q18LWK1R-WS**	**Q25LWK1R-WS**
Momentary	3	Green		**Q18LWK3-GN**	**Q25LWK3-GN**
		Red		**Q18LWK3-RT**	**Q25LWK3-RT**
		White		**Q18LWK3-WS**	**Q25LWK3-WS**
Maintained		Green		**Q18LWK3R-GN**	**Q25LWK3R-GN**
		Red		**Q18LWK3R-RT**	**Q25LWK3R-RT**
		White		**Q18LWK3R-WS**	**Q25LWK3R-WS**
Maintained/ momentary		Green		**Q18LWK3R1-GN**	**Q25LWK3R1-GN**
		Red		**Q18LWK3R1-RT**	**Q25LWK3R1-RT**
		White		**Q18LWK3R1-WS**	**Q25LWK3R1-WS**
Momentary/ maintained		Green		**Q18LWK3R2-GN**	**Q25LWK3R2-GN**
		Red		**Q18LWK3R2-RT**	**Q25LWK3R2-RT**
		White		**Q18LWK3R2-WS**	**Q25LWK3R2-WS**

Notes

① To order with incandescent 24V bulb, insert a **/WB** at the end of the catalog number. Example, Q18LWK1-GN**/WB**.

② For a complete selection of incandescent 24V bulbs and LEDs, see **Page V7-T1-34**.

1

Catalog Number Selection

Catalog Number Selection is for illustrative purposes only and not to be used to create new catalog numbers.

Keyed Selector Switches—Two- and Three-Position

Q 18 – S1 – A1 – WS

Face Plate
18 = 18 x 18 mm
25 = 25 x 25 mm

Switch Positions
S1 = Two positions momentary
S1R = Two positions maintained
S3 = Three positions momentary
S3R = Three positions maintained

Key Code
A1–A7 = Switch and key removal positions (detailed below)

Color	
GN = Green	**WS** = White
RT = Red	**BL** = Blue
SW = Black	

Product Selection

Keyed Selector Switches

- 5 color options
- Momentary or maintained
- 18 mm or 25 mm square operator
- VS Anti-rotation feature
- 3 million mechanical operations
- IP65

Q18S1

Keyed Selector Switches—Two-Position

Function	Button Color	Switch Position	Key Removal Position ①	Catalog Number 18 x 18 mm	25 x 25 mm
Momentary	Black		0	**Q18S1**	**Q25S1**
Maintained	Black		0	**Q18S1R**	**Q25S1R**
Maintained	Black		0	**Q18S1R-A1**	**Q25S1R-A1**

Keyed Selector Switches—Three-Position

Function	Button Color	Switch Position	Key Removal Position ①	Catalog Number 18 x 18 mm	25 x 25 mm
Momentary	Black		0	**Q18S3**	**Q25S3**
Maintained			0, II	**Q18S3R**	**Q25S3R**
Maintained			0	**Q18S3R-A1**	**Q25S3R-A1**
			I, 0	**Q18S3R-A2**	**Q25S3R-A2**
			0, II	**Q18S3R-A3**	**Q25S3R-A3**
Maintained/ momentary			I, 0	**Q18S3R-A4**	**Q25S3R-A4**
			0	**Q18S3R-A5**	**Q25S3R-A5**
Momentary/ maintained			0, II	**Q18S3R-A6**	**Q25S3R-A6**
			0	**Q18S3R-A7**	**Q25S3R-A7**

Note

① I = Key is removed at the left.
0 = Key is removed at the center.
II = Key is removed at the right.

Q18S1-BL

Keyed Selector Switches, Multicolor—Two-Position

Function	Button Color	Switch Position	Key Removal Position ①	Catalog Number 18 x 18 mm	25 x 25 mm
Momentary	Green		0	**Q18S1-GN**	**Q25S1-GN**
	Red			**Q18S1-RT**	**Q25S1-RT**
	White			**Q18S1-WS**	**Q25S1-WS**
	Blue			**Q18S1-BL**	**Q25S1-BL**
Maintained	Green		0	**Q18S1R-GN**	**Q25S1R-GN**
	Red			**Q18S1R-RT**	**Q25S1R-RT**
	White			**Q18S1R-WS**	**Q25S1R-WS**
	Blue			**Q18S1R-BL**	**Q25S1R-BL**

Q18S3-RT

Keyed Selector Switches, Multicolor—Three-Position

Function	Button Color	Switch Position	Key Removal Position ①	Catalog Number 18 x 18 mm	25 x 25 mm
Momentary	Green		0	**Q18S3-GN**	**Q25S3-GN**
	Red			**Q18S3-RT**	**Q25S3-RT**
	White			**Q18S3-WS**	**Q25S3-WS**
	Blue			**Q18S3-BL**	**Q25S3-BL**
Maintained	Green		0, II	**Q18S3R-GN**	**Q25S3R-GN**
	Red			**Q18S3R-RT**	**Q25S3R-RT**
	White			**Q18S3R-WS**	**Q25S3R-WS**
	Blue			**Q18S3R-BL**	**Q25S3R-BL**

Note

① I = Key is removed at the left.
0 = Key is removed at the center.
II = Key is removed at the right.

1

Accessories

E10

E01

Contact Elements

Feature	Catalog Number
Normally open (N/O)	**E10**
Normally closed (N/C)	**E01**

SRA10

Screw Adapter

Feature	Catalog Number
Normally open (N/O)	**SRA10**
Normally closed (N/C)	**SRA01**
Lamp sockets	**SRAL**

WBGL6

Incandescent 24V Bulbs

Voltage	Current	Color	Catalog Number
6V	1W	White	**WBGL6**
12V			**WBGL12**
24–28V			**WBGL24**

WBLED-GN6

LEDs (AC/DC)

Voltage	Current	Color	Catalog Number
Multiple Chip LED			
6V	45 mA	Green	**WBLED-GN6**
12V	24 mA		**WBLED-GN12**
6V	45 mA	Red	**WBLED-RT6**
12V	24 mA		**WBLED-RT12**
6V	45 mA	Yellow	**WBLED-GE6**
12V	24 mA		**WBLED-GE12**
Single Chip LED ①			
18–30V	7–12.5 mA	Green	**LEDWB-G**
		Red	**LEDWB-R**
		White	**LEDWB-W**
		Blue	**LEDWB-B**
		Yellow	**LEDWB-Y**

ISH2,8

Insulated Ferrule

Description	Catalog Number
Insulated ferrule	**ISH2,8**

R16-MS

Combination Box Spanner

Description	Catalog Number
Mounting ring tool	**16-MS**

VS

Anti-Rotation Tab

Description	Catalog Number
Guard ring	**VS**

E8-SW

Housing

Description	Color	Catalog Number
Surface mount enclosure	White	**I8**
Flush mount panel	White	**E8**
	Black	**E8-SW**

Q18BS

Blanking Plug

Size	Catalog Number
18 x 18 mm	**Q18BS**
25 x 25 mm	**Q25BS**

Q25AGR

Cover Plate

Size	Color	Catalog Number
25 x 38 mm	Black	**Q25AS**
	Gray	**Q25AGR**

Note

① Positive pole to X1. Integral suppressor circuit up to 1000V.

02SQ25

Insert Plate

Size		Catalog Number
10 x 22 mm	BLANK	**02SQ25**

Q25TS-X

Legend Plate

Size	Color	Catalog Number
25 x 38 mm	Black	**Q25TS-X**
	Gray	**Q25TGR-X**

Q25TS_

Legend Plate—Complete

Size	Etching			Catalog Number
25 x 38	START			**Q25TS-111**
	STOP			**Q25TS-110**
	FAULT			**Q25TS-250**
	HAND	0	AUTO	**Q25TS-197**
	MAN	0	AUTO	**Q25TS-397**
		0		**Q25TS-10**
		I		**Q25TS-11**
		0	I	**Q25TS-90**
	I	0	II	**Q25TS-93**

SQT11

SRT11

Emergency Stop Labels

Type	Feature	Catalog Number
Square	4 Languages	**SQT11**
	Blank	**SQT-GE**
Circle	4 Languages	**SRT11**
	Blank	**SRT-GE**

Extra Keys

ES16

Codes for Extra Keys

Color	Catalog Number
Green	**ES16-GN**
Red	**ES16-RT**
Black	**ES16**
White	**ES16-WS**
Blue	**ES16-BL**

Button Plates

Button Plates

Type	Color	Etching	Catalog Number
18 x 18 mm	Black	—	**01TQ18**
		CUSTOM	**01TQ18-ETCH**
		I	**21TQ18**
		O	**19TQ18**
	White	—	**02TQ18**
		CUSTOM	**02TQ18-ETCH**
		I	**20TQ18**
	Green	—	**03TQ18**
		CUSTOM	**03TQ18-ETCH**
		I	**11TQ18**
	Red	—	**04TQ18**
		CUSTOM	**04TQ18-ETCH**
		O	**10TQ18**
	Yellow	—	**05TQ18**
		CUSTOM	**05TQ18-ETCH**
	Blue	—	**06TQ18**
		CUSTOM	**06TQ18-ETCH**

Type	Color	Etching	Catalog Number
25 x 25 mm	Black	—	**01TQ25**
		CUSTOM	**01TQ25-ETCH**
		I	**21TQ25**
		O	**19TQ25**
		"STOP"	**112TQ25**
		"ON"	**221TQ25**
	White	—	**02TQ25**
		CUSTOM	**02TQ25-ETCH**
		I	**20TQ25**
	Green	—	**03TQ25**
		CUSTOM	**03TQ25-ETCH**
		"START"	**111TQ25**
		I	**11TQ25**
	Red	—	**04TQ25**
		CUSTOM	**04TQ25-ETCH**
		"STOP"	**110TQ25**
		O	**10TQ25**
		"OFF"	**217TQ25**
	Yellow	—	**05TQ25**
		CUSTOM	**05TQ25-ETCH**
	Blue	—	**06TQ25**
		CUSTOM	**06TQ25-ETCH**

Instructions for Ordering Laser Inscriptions

1. Identify part number to be inscribed.
2. Pick symbol from library and identify suffix code associated with the symbol.
3. Order part number already listed in the catalog with -ETCH suffix.
4. When placing an order by fax or Vistaline on the web, reference order item number and indicate appropriate symbol code or desired text.

Example

To order a 25 mm green flush button plate with the inscription AUTO HAND:

Order Catalog Number **03TQ25-ETCH**.
AUTO HAND inscription is found on **Page V7-T1-127** in the M22 Symbols Library, suffix code is **X91**.
In the order notes, reference item number and suffix **X91**.

Note: For a complete list of available symbols, see **Pages V7-T1-124** to **V7-T1-130**, M22 Symbols Library.

Technical Data and Specifications

RMQ-16

Description	Unit	Specification Contact Elements	Illuminated Pushbutton Operators (Maintained)	Illuminated Selector Switches	Indicating Lights
General Technical Data					
Standards		UL, CSA, IEC/EN 60 947, VDE 0660, CE			
Lifespan, mechanical (operations)	x 10^5	100	30 (3)	3	—
Maximum operating frequency	Ops/h	3600	3600 (1800)	1800	—
Operating force	N	3	4	—	—
Operating torque	Nm		—	≦0.2	—
Degree of protection to IEC/EN 60 529		IP20 with ISH2,8	IP65	IP65	IP65
Climatic proofing		Damp heat, constant, to IEC 60 068-2-3/Damp heat, cyclical, to IEC 60 068-2-30			
Ambient temperature					
Open	°C	–25 to 60	–25 to 60	–25 to 60	–25 to 60
Enclosed	°C	–25 to 40	–25 to 40	–25 to 40	–25 to 40
Mounting position		As required	As required	As required	As required
Mechanical shock resistance to IEC 60 068-2-27 (half-sinusoidal shock, duration 11 ms)	g	40	40	40	40
Terminal capacity (min./max.)	mm^2	0.5/1.0	0.5/1.0	0.5/1.0	0.5/1.0
Blade terminal		2.8 mm x 0.8 mm to DIN 46 244			
Ferrule		2.8 mm x 0.8 mm to DIN 46 247 and IEC 60 760			
Dimensions		See **Page V7-T1-39**	See **Page V7-T1-39**	See **Page V7-T1-39**	See **Page V7-T1-39**
Contacts					
Rated impulse withstand voltage U_{imp}	V	4000	800	800	800
Rated insulation voltage U_i	V	250	250	250	250
Overvoltage category/pollution degree		III/3	III/3	III/3	III/3
Rated operational voltage U_e (max.)	V	250	24	24	24
Rated operational current I_e (max.)	A	4	—	—	—
Control circuit reliability at					
24 Vdc/5 mA (Fault probability Hr)		$<10^{-7}$, <1 fault in 10^7 operations			
5 Vdc/1 mA (Fault probability Hr)		$<5 \times 10^{-6}$, < fault in 5×10^6 operations			
Use of insulated ferrule ISH 2.8					
From U_e		>24 Vac/dc recommended	>24 Vac/dc recommended	>24 Vac/dc recommended	>24 Vac/dc recommended
From U_e			>50 Vac or 120 Vdc is mandatory, even on unused blade terminals		
Maximum short-circuit protective device					
Fuseless	Type	FAZ-B6	—	—	—
Fuse	A gG/gL	10	—	—	—
Switching Capacity					
Rated operational current I_e					
AC-15					
24V	A	4	—	—	—
48V	A	4	—	—	—
110V	A	4	—	—	—
230V	A	4	—	—	—
DC-13					
24V	A	3	—	—	—
42V	A	1.0	—	—	—
60V	A	0.8	—	—	—
110V	A	0.5	—	—	—
220V	A	0.2	—	—	—
UL/CSA Data		UL listed File No. E 29 184, Guide No. NKCR/CSA certified File No. 46 552 Class No. 321103			
Blade terminal		0.110 x 0.032 in	0.110 x 0.032 in	0.110 x 0.032 in	0.110 x 0.032 in
Fast-on connector		0.110 x 0.032 in AMP #60 197-1, 62 050-1 or equivalent			
Rated voltage maximum AC	Vac	300	24	24	24
Contact rating code AC	E10/E01	C300/Q300	—	—	—
Thermal continuous test current	A	2.5	—	—	—
Rated voltage maximum DC	Vdc	300	—	—	—
Contact rating code DC	E10/E01	C300/R300	—	—	—
Thermal continuous test current	A	2.5	—	—	—

1

RMQ-16, continued

Description	Unit	Specification Pushbutton Operators (Maintained)	Selector Switches	Key-Released Operators	Emergency Stop Operators	Emergency Stop Operators (Illuminated) ①
General Technical Data						
Standards				UL, CSA, IEC/EN 60 947, VDE 0660, CE		
Lifespan, mechanical (operations)	x 10^5	30 (3)	3	3	0.5	0.5
Maximum operating frequency	Ops/h	3600 (1800)	1800	1800	600	600
Operating force	N	4	—	—	25	25
Operating torque	Nm	—	≦ 0.2	≦ 0.4	—	—
Degree of protection to IEC/EN 60 529		IP65	IP65	IP65	IP65	IP65
Climatic proofing				Damp heat, constant, to IEC 60 068-2-3 Damp heat, cyclical, to IEC 60 068-2-30		
Ambient temperature						
Open	°C	–25 to 60	–25 to 60	–25 to 60	–25 to 60	–25 to 60
Enclosed	°C	–25 to 40	–25 to 40	–25 to 40	–25 to 40	–25 to 40
Mounting position		As required	As required	As required	As required	As required
Mechanical shock resistance to IEC 60 068-2-27 (half-sinusoidal shock, duration 11 ms)	g	40	40	40	40	40
Terminal capacity (min./max.)	mm^2	—	—	—	—	0.5/1.0
Blade terminal		—	—	—	—	2.8 x 0.8 mm
Ferrule		—	—	—	—	2.8 x 0.8 mm
Dimensions		See **Page V7-T1-39**	See **Page V7-T1-39**	See **Page V7-T1-39**	See **Page V7-T1-39**	See **Page V7-T1-39**

Lifespan, Electrical AC-15 to IEC/EN 60 947-5-1 at 230V

I_e = Rated operational current

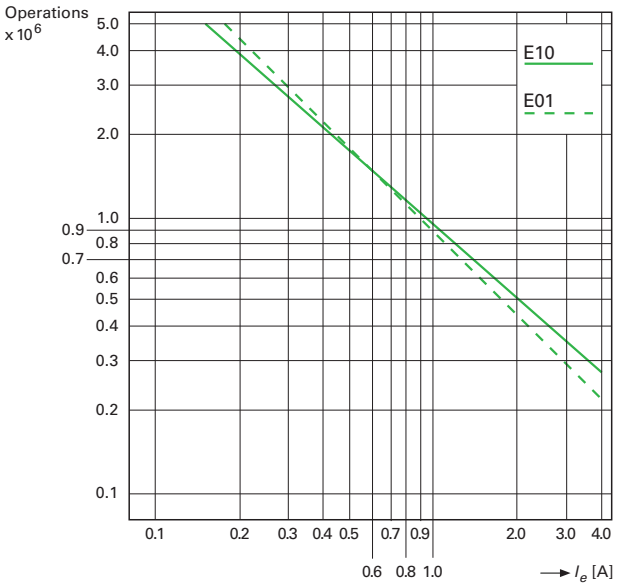

Note

① See illuminated selector switches on **Page V7-T1-31** for contact values.

Dimensions

Approximate Dimensions in mm [in]

Actuating and Indicator Elements

Square Style

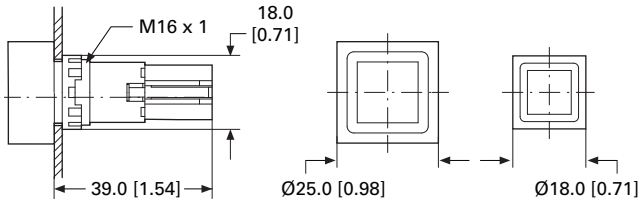

Q...BS

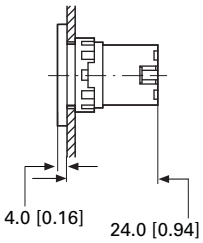

Q...D-_, Q...DR-_

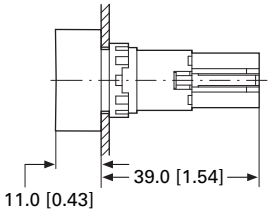

Q...S_

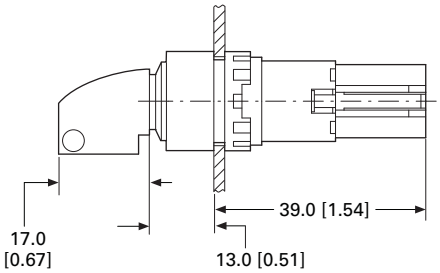

Q...WK_

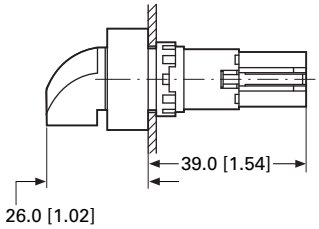

Q...LT-_, Q...LTR-_, Q...LF-_

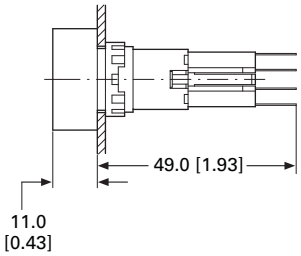

Q...LH-_

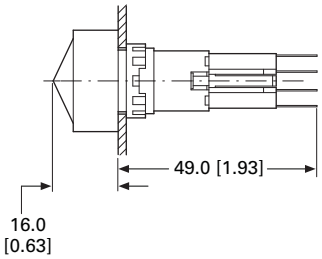

Q...LWK_

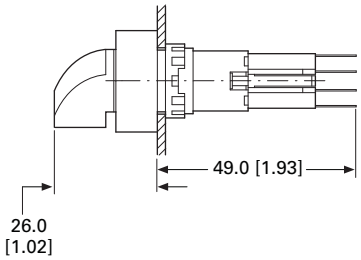

Q25PV_, Q25LPV_

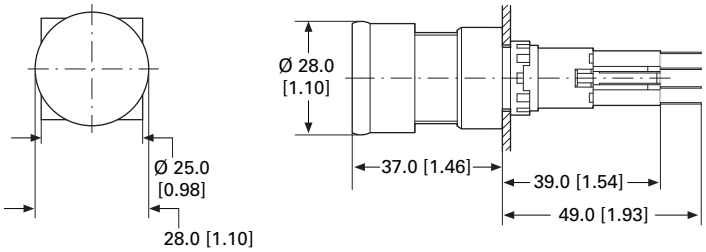

1

Approximate Dimensions in mm [in]

Front Fixing

Q18, Q25, E89, SRA, VS, M16

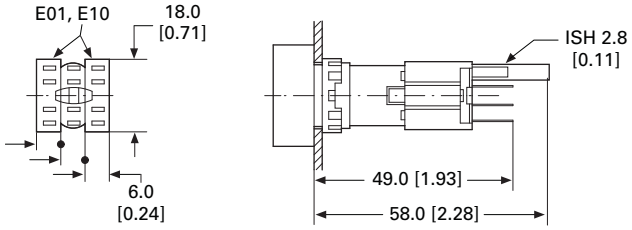

Drilling Dimensions

Drilling

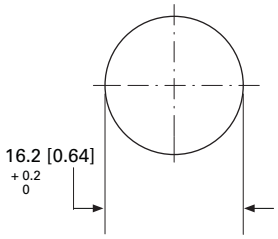

Grid Dimension to IEC/EN 60947

Q25

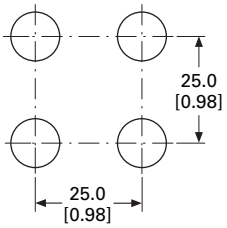

Minimum Grid Spacing Dimension

Q18

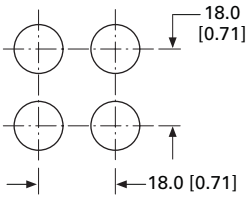

Mounting Distance

Mounting

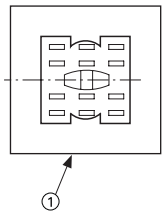

RMQ Screw Adapter

SRA_

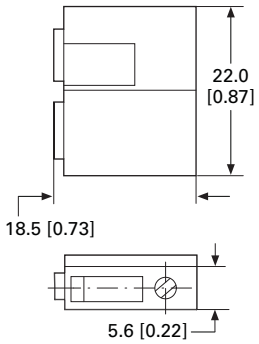

Anti-Rotation Feature

VS

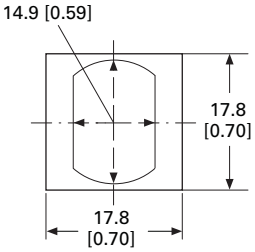

RMQ-16 Label Mount

Q25TS-_

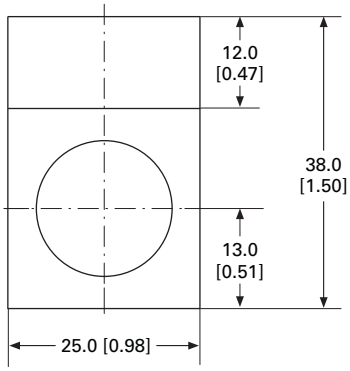

Blanking Plates

Q25AS

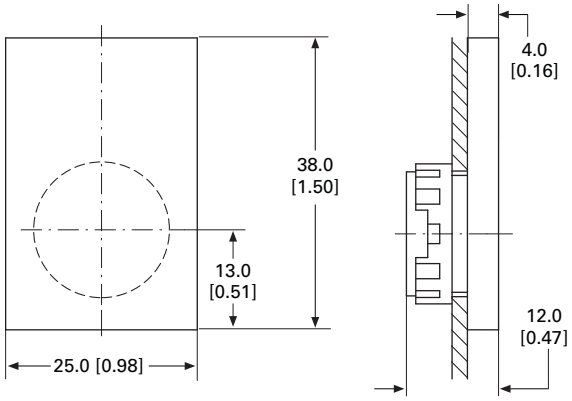

Note

① Exposed conductive part (metal).

22.5 mm RMQ-Titan Modular Pushbuttons—M22

Contents

Description	Page
22.5 mm RMQ-Titan Modular Pushbuttons—M22	
Product Selection Guide	V7-T1-42
Accessories	V7-T1-105
Coding Adapter Guide	V7-T1-112
Technical Data and Specifications	V7-T1-113
Dimensions	V7-T1-117
Symbols Library	V7-T1-123

Drawings Online

Product Description

Eaton's M22 industrial heavy-duty pushbutton line offers a wide array of functional, attractive and ergonomically designed illuminated and non-illuminated pushbuttons, selector switches, push-pulls, alternate action and twist-to-release operators. The complete illuminated line is only offered in LED light units to ensure high-quality brightness and up to 100,000 hours of LED illumination. M22 operators are available with either a silver or black nylon colored or chrome metal bezel. The space-saving modular construction of the M22 line makes on-the-job assembly fast and simplifies the stocking of both components and complete devices.

NEW

Eaton has expanded M22 pilot devices with a metal bezel option. The new M22M pushbutton is an elegant chrome metal bezel that is attractive, durable and rugged for heavy-duty environments. M22M devices are configurable and complement components within the M22 line.

Highly Modular and Versatile Line

- Field convertible functions (pushbuttons and selector switches), maintained to momentary
- Customizable laser engraving capabilities

LED Indicators

- 100,000 hours of life in high-vibration environments
- Lenses specifically designed for LED illumination
- Multi-color LED in the flat contact family allows versatility in design and reduces installation costs and footprint

Rugged Design

- Most pushbutton operators and contact blocks exceed 5 million mechanical operations
- All components have IP66 rating, and some carry IP67 and IP69K for washdown environment; see **Page V7-T1-113** for further technical data

Innovative Technologies

- ASi communicating devices
- Palm switches

Standards and Certifications

All operators and components are IEC/EN 60947 VDE 0660.

All operators carry an IP66 rating with some rated for washdown environment with IP67 and IP69K.

All pushbuttons, emergency-stops, indicating lights, potentiometers and selector switches carry NEMA 4X, 13.

Marine classification societies: Bureau Veritas (BV), Germanischer Lloyd (GL), and Lloyd's Register of Shipping (LR) approved.

1

Features

- Field convertible pushbuttons and mushroom operators from maintained to momentary status
- Field convertible selector switches from momentary to maintained operation and vice versa
- LED offering only for all illuminated operators
- Laser engraved pushbuttons, lenses and enclosures
- Heavy-duty construction with a minimum of IP66 and UL NEMA® type 4X / 13 on front of panel operators. Many operators even carry IP67 and IP69K, for the toughest applications
- Silver, black or chrome metal bezel now available
- Snap-lock contact blocks and light units for front or base mounting
- Notched hole mounting with anti-rotation tab and central nut mounting on each operator
- Over 5 million mechanical operations and 1.6 million electrical (reference specification sheet)
- Direct opening action normally closed contacts
- Unique and innovative offerings, such as four-way pushbuttons and USB/ RJ45 bulkhead interfaces
- Screw or spring-cage terminals

Benefits

- Modular construction makes assembly fast and simplifies stocking of components and complete devices
- Field convertibility of operator status for pushbuttons and selector switches helps distributors and customers reduce inventory and increase functionality
- LED offering only for improved brightness quality and up to 100,000 hours of operation
- Plastic construction is corrosion resistant. Operators are designed for rugged environments, ideal for washdown applications (reference each operator's IP ratings and IEC/EN 60529 for ingress protection definition)
- Anti-rotation tab saves installation time and prevents operator rotation
- High mechanical and electrical life allows for use in tough and challenging applications
- Laser inscription capabilities allow for high-quality, wear-resistant markings
- All normally closed (NC) contacts are direct opening action, i.e., NC contacts are physically forced open by direct linkage with the pushbutton operator in the unlikely event of contact weld
- Some M22 operators are capable of communication via ASi protocol
- M22 offers USB and RJ45 connections

Product Selection Guide

Pushbuttons

Description	Non-illuminated, flush		Non-illuminated, extended		Illuminated, flush		Illuminated, extended	
Operator	Momentary	Maintained	Momentary	Maintained	Momentary	Maintained	Momentary	Maintained
Product Selection	**Pages V7-T1-47** to **V7-T1-49**	**Pages V7-T1-50, V7-T1-51**	**Pages V7-T1-52, V7-T1-53**	**Pages V7-T1-54, V7-T1-55**	**Pages V7-T1-57** to **V7-T1-59**	**Pages V7-T1-60, V7-T1-61**	**Pages V7-T1-62, V7-T1-63**	**Pages V7-T1-64, V7-T1-65**

Indicating Lights

Description	Flat	Conical
Product Selection	**Pages V7-T1-66, V7-T1-67**	**Pages V7-T1-66, V7-T1-67**

Emergency Stops

Description	Non-illuminated	Illuminated	Key release	Mechanical indication
Product Selection	**Page V7-T1-69**	**Page V7-T1-69**	**Page V7-T1-70**	**Page V7-T1-70**

Selector Switches

Description	Non-illuminated knob type	Non-illuminated rotary type	Illuminated	Key-operated
Product Selection	**Pages V7-T1-74, V7-T1-75**	**Pages V7-T1-76, V7-T1-77**	**Pages V7-T1-79** to **V7-T1-81**	**Pages V7-T1-82** to **V7-T1-85**

Mushroom Head Pushbuttons

Description	Non-illuminated	Non-illuminated
Operator	Momentary	Maintained
Product Selection	**Pages V7-T1-88, V7-T1-89**	**Pages V7-T1-90, V7-T1-91**

Double Pushbuttons

Description	Extended pushbuttons and center light	Flush top and center light, extended bottom	Flush pushbuttons and center light
Operator	Momentary	Momentary	—
Product Selection	**Page V7-T1-93**	**Page V7-T1-94**	**Page V7-T1-94**

Four-Way Pushbuttons

Description	Non-interlocked	Interlocked
Operator	Momentary	Maintained
Product Selection	**Page V7-T1-97**	**Page V7-T1-97**

Joysticks

Description	Joysticks
Product Selection	**Page V7-T1-98**

Potentiometers

Description	Potentiometers
Product Selection	**Page V7-T1-100**

Acoustic Devices

Description	Acoustic devices
Product Selection	**Page V7-T1-100**

Through-the-Door Operators

Description	Through-the-door operators
Product Selection	**Page V7-T1-101**

Bulkhead Interfaces

Description	Bulkhead interfaces
Product Selection	**Page V7-T1-101**

ASi Adapter Modules

Description	ASi adapter modules
Product Selection	**Page V7-T1-102**

Palm Switches

Description	Palm switches
Product Selection	**Page V7-T1-103**

Assembled Control Stations

Description	Assembled control stations
Product Selection	**Page V7-T1-10**

M22-_

Point-of-Purchase Units

Color	Type	Contact Configuration ①	Catalog Number
Black	Flush momentary	NO/NC	**M22-D-S-K11-P**
Red	Extended momentary	NO/NC	**M22-DH-R-K11-P**
Green	Flush momentary	NO/NC	**M22-D-G-K11-P**
Red	Ext. illuminated (12–30V) momentary	NO/NC	**M22-DLH-R-K11-R-P**
Red	Ext. illuminated (85–264V) momentary	NO/NC	**M22-DLH-R-K11-230R-P**
White	Flush illuminated (12–30V) maintained	NO/NC	**M22-DRL-W-K11-W-P**
White	Flush illuminated (85–264V) maintained	NO/NC	**M22-DRL-W-K11-230W-P**
Red	Indicating light (12–30V)	—	**M22-L-R-R-P**
Green	Indicating light (12–30V)	—	**M22-L-G-G-P**
Red	Indicting light (85–264V)	—	**M22-L-R-230R-P**
Green	Indicating light (85–264 Vac)	—	**M22-L-G-230G-P**
Red	Twist-to-release E-stop	1NO/2NC	**M22-PVT-K12-P**
Red	Illuminated (12–30V) push-pull E-stop	1NO/2NC	**M22-PVL-K12-R-P**
Red	Illuminated (85–264V) push-pull E-stop	1NO/2NC	**M22-PVL-K12-230R-P**
—	Two-position maintained V selector switch	NO/NC	**M22-WKV-K11-P**
—	Three-position momentary selector switch	NO/NC	**M22-WK3-K22-P**

Note

① All NC contact blocks are positively driven contact. ⊖

Pushbuttons—Non-Illuminated and Illuminated

Contents

Description	*Page*
Pushbuttons—Non-Illuminated and Illuminated	
Non-Illuminated, Flush, Momentary	**V7-T1-47**
Non-Illuminated, Flush, Maintained	**V7-T1-50**
Non-Illuminated, Extended, Momentary	**V7-T1-52**
Non-Illuminated, Extended, Maintained	**V7-T1-54**
Illuminated, Flush, Momentary	**V7-T1-57**
Illuminated, Flush, Maintained	**V7-T1-60**
Illuminated, Extended, Momentary	**V7-T1-62**
Illuminated, Extended, Maintained	**V7-T1-64**

Pushbuttons—Non-Illuminated and Illuminated

Product Description

Eaton's M22 pushbutton line is a complete, modular and versatile offering. From field-convertible maintained operators to customizable laser engraved buttons, the M22 pushbutton line provides endless opportunity for flexibility and reduced inventory. Each operator type provides options for ordering as complete or component parts allowing for a perfect fit for each application. All of this flexibility comes in a very rugged design.

Features

- Field convertible from maintained to momentary (available on maintained pushbuttons only)
- Customizable laser engraving on all buttons
- LED offering only for improved brightness quality and up to 100,000 hours of operation
- More than five million mechanical operations on momentary and 1 million on maintained pushbuttons
- Modular construction makes assembly fast and simplifies stocking of components and complete devices
- Capable of communicating via ASi protocol with ASi adapter modules

Protection Type

- IP67, IP69K
- NEMA 4X, 13

Catalog Number Selection

Catalog Number Selection is for illustrative purposes only and not to be used to create new catalog numbers.

Non-Illuminated Pushbuttons

M22 – D – S – X0 – K10

Bezel

M22	= Silver
M22S	= Black
M22M	= Metal

Operator Type

D	= Flush momentary
DH	= Extended momentary
DG	= Flush with guard ①
DR	= Flush maintained
DGH	= Extended momentary with guard ①
DRH	= Extended maintained

Button Plate Color

G = Green	**S** = Black
Y = Yellow	**R** = Red
B = Blue	**W** = White

Inscription

GB0 = STOP	**X0** = ◎
GB1 = START	**X1** = ⓘ
GB2 = CLOSE	**X4** = ⊕
GB3 = UP	**X5** = ⊖
GB4 = DOWN	**X6** = Ⓡ
GB5 = OFF	**X7** = ⓣ
GB6 = ON	**X8** = ⊘
GB14 = RESET	
GB15 = FORWARD	
GB16 = REVERSE	

Contact Blocks

K10 = 1NO	**K30** = 3NO
K01 = 1NC	**K03** = 3NC
K20 = 2NO	**K21** = 2NO-1NC
K02 = 2NC	**K12** = 1NO-2NC
K11 = 1NO-1NC	

① Silver bezel only.

Product Selection

Non-Illuminated Pushbuttons, Flush, Momentary

M22-D-G-K10

M22S-D-G-K10

M22M-D-G-K10

Complete Devices

Button Color	Contact Block Configuration ①	Silver Bezel Catalog Number	Black Bezel Catalog Number	Metal Bezel Catalog Number
Black	NO	**M22-D-S-K10**	**M22S-D-S-K10**	**M22M-D-S-K10**
	NC	**M22-D-S-K01**	**M22S-D-S-K01**	**M22M-D-S-K01**
	2NO	**M22-D-S-K20**	**M22S-D-S-K20**	**M22M-D-S-K20**
	2NC	**M22-D-S-K02**	**M22S-D-S-K02**	**M22M-D-S-K02**
	1NO-1NC	**M22-D-S-K11**	**M22S-D-S-K11**	**M22M-D-S-K11**
Red	NO	**M22-D-R-K10**	**M22S-D-R-K10**	**M22M-D-R-K10**
	NC	**M22-D-R-K01**	**M22S-D-R-K01**	**M22M-D-R-K01**
	2NO	**M22-D-R-K20**	**M22S-D-R-K20**	**M22M-D-R-K20**
	2NC	**M22-D-R-K02**	**M22S-D-R-K02**	**M22M-D-R-K02**
	1NO-1NC	**M22-D-R-K11**	**M22S-D-R-K11**	**M22M-D-R-K11**
Green	NO	**M22-D-G-K10**	**M22S-D-G-K10**	**M22M-D-G-K10**
	NC	**M22-D-G-K01**	**M22S-D-G-K01**	**M22M-D-G-K01**
	2NO	**M22-D-G-K20**	**M22S-D-G-K20**	**M22M-D-G-K20**
	2NC	**M22-D-G-K02**	**M22S-D-G-K02**	**M22M-D-G-K02**
	1NO-1NC	**M22-D-G-K11**	**M22S-D-G-K11**	**M22M-D-G-K11**

Note

① All NC contact blocks are positively driven contact. ⊖

1

Non-Illuminated Pushbuttons, Flush, Momentary

M22-D-G

M22S-D-G

M22M-D-G

Operators Only ①

Button Color	Inscription	Silver Bezel Catalog Number	Black Bezel Catalog Number	Metal Bezel Catalog Number
Black	—	**M22-D-S**	**M22S-D-S**	**M22M-D-S**
Red	—	**M22-D-R**	**M22S-D-R**	**M22M-D-R**
	STOP	**M22-D-R-GB0**	**M22S-D-R-GB0**	—
	◎	**M22-D-R-X0**	**M22S-D-R-X0**	**M22M-D-R-X0**
Green	—	**M22-D-G**	**M22S-D-G**	**M22M-D-G**
	START	**M22-D-G-GB1**	**M22S-D-G-GB1**	**M22M-D-G-GB1**
	①	**M22-D-G-X1**	**M22S-D-G-X1**	**M22M-D-G-X1**
White	—	**M22-D-W**	**M22S-D-W**	**M22M-D-W**
Blue	—	**M22-D-B**	**M22S-D-B**	**M22M-D-B**
Yellow	—	**M22-D-Y**	**M22S-D-Y**	**M22M-D-Y**
—	—	**M22-D-X-SRG** ②	**M22S-D-X-SRG** ②	**M22M-D-X-SRG** ②
	—	**M22-D-X-SWRGYB** ③	**M22S-D-X-SWRGYB** ③	**M22M-D-X-SWRGYB** ③

M22-DG-G

Silver Guarded

Button Color	Inscription	Silver Bezel Catalog Number
Black	—	**M22-DG-S**
Red	—	**M22-DG-R**
Green	—	**M22-DG-G**
White	—	**M22-DG-W**
Blue	—	**M22-DG-B**
Yellow	—	**M22-DG-Y**
—	—	**M22-DG-X-SRG** ②
	—	**M22-DG-X-SWRGYB** ③

Notes

① Includes contact block mounting adapter.
② Buttonless operator comes with three color buttons (black, red, green).
③ Buttonless operator comes with all six color buttons (black, white, red, green, yellow, blue).

Non-Illuminated Pushbuttons, Flush, Momentary

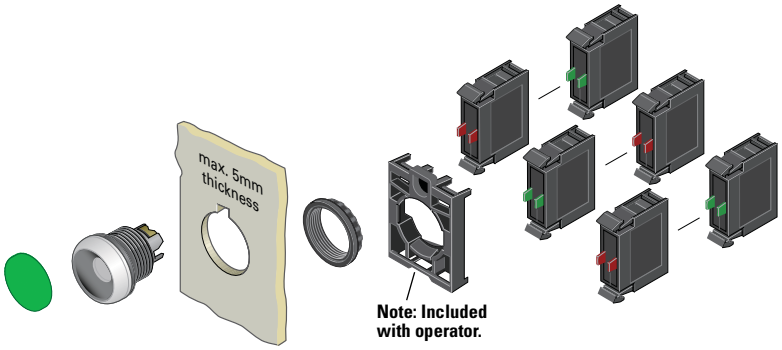

Components

M22-XD-G

Button Plates ①

Color	Inscription	Catalog Number
Black	—	**M22-XD-S** ②
	Custom	**M22-XD-S-ETCH** ③
	STOP	**M22-XD-S-GB0**
	START	**M22-XD-S-GB1**
	CLOSE	**M22-XD-S-GB2**
	UP	**M22-XD-S-GB3**
	DOWN	**M22-XD-S-GB4**
	OFF	**M22-XD-S-GB5**
	ON	**M22-XD-S-GB6**
	TEST	**M22-XD-S-GB9**
	FORWARD	**M22-XD-S-GB15**
	REVERSE	**M22-XD-S-GB16**
	RAISE	**M22-XD-S-GB17**
	LOWER	**M22-XD-S-GB18**
	◎	**M22-XD-S-X0**
	⏽	**M22-XD-S-X1**
	⏾	**M22-XD-S-X2**
	⊕	**M22-XD-S-X4**
	⊖	**M22-XD-S-X5**
	⇧	**M22-XD-S-X7**
Red	—	**M22-XD-R** ②
	Custom	**M22-XD-R-ETCH** ③
	STOP	**M22-XD-R-GB0**
	OFF	**M22-XD-R-GB5**
	◎	**M22-XD-R-X0**
Green	—	**M22-XD-G** ②
	Custom	**M22-XD-G-ETCH** ③
	START	**M22-XD-G-GB1**
	ON	**M22-XD-G-GB6**
	⏽	**M22-XD-G-X1**
Blue	—	**M22-XD-B** ②
	Custom	**M22-XD-B-ETCH** ③
	RESET	**M22-XD-B-GB14**
	Ⓡ	**M22-XD-B-X6**
White	—	**M22-XD-W** ②
	Custom	**M22-XD-W-ETCH** ③
	START	**M22-XD-W-GB1**
	⏽	**M22-XD-W-X1**
Yellow	—	**M22-XD-Y** ②
	Custom	**M22-XD-Y-ETCH** ③
Black, red, green	—	**M22-XD-SRG**
Black, white, red, green, yellow, blue	—	**M22-XD-SWRGYB**

Buttonless Operator

Silver Bezel Catalog Number ④
M22-D-X

Black Bezel Catalog Number ④
M22S-D-X

Metal Bezel Catalog Number ④
M22M-D-X

Silver Guarded

Silver Bezel Catalog Number ④
M22-DG-X

M22-K10

M22-FK01

Contact Blocks ①

Terminal Type	Contact Configuration ⑤	Catalog Number
Screw	NO	**M22-K10**
	NO, early-make	**M22-K10P**
	NC	**M22-K01**
	NC, late-break	**M22-K01D**
Spring-cage	NO	**M22-CK10**
	NC	**M22-CK01**
	NC, late-break	**M22-CK01D**
	2NO	**M22-CK20**
	2NC	**M22-CK02**
	NO-NC	**M22-CK11**
	NC	**M22-FK01** ⑥
	NO	**M22-FK10** ⑥

Notes

① For complete listing of available button plates and contact blocks, see Accessories, **Pages V7-T1-105** to **V7-T1-110**.
② Minimum order quantity of (10).
③ When ordering, specify inscription per catalog number suffix from the Symbols Library (see **Pages V7-T1-123** to **V7-T1-130**) into the Order Notes.
For example, M22-XD-S-ETCH; Order Notes: Mark with symbol X91, Line item #_.
④ Includes contact block mounting adapter.
⑤ All NC contact blocks are positively driven contact. ⊖
⑥ Additional contacts may not be stacked behind M22-F type contact blocks, M22-F can be stacked behind standard M22 contacts only.

1

Non-Illuminated Pushbuttons, Flush, Maintained ①

M22-DR-S

M22S-DR-S

M22M-DR-S

Operators Only ②

Button Color	Silver Bezel Catalog Number	Black Bezel Catalog Number	Metal Bezel Catalog Number
Black	**M22-DR-S**	**M22S-DR-S**	**M22M-DR-S**
Red	**M22-DR-R**	**M22S-DR-R**	**M22M-DR-R**
Green	**M22-DR-G**	**M22S-DR-G**	**M22M-DR-G**
White	**M22-DR-W**	**M22S-DR-W**	**M22M-DR-W**
Blue	**M22-DR-B**	**M22S-DR-B**	**M22M-DR-B**
Yellow	**M22-DR-Y**	**M22S-DR-Y**	**M22M-DR-Y**
③	**M22-DR-X-SRG**	**M22S-DR-X-SRG**	**M22M-DR-X-SRG**
④	**M22-DR-X-SWRGYB**	**M22S-DR-X-SWRGYB**	**M22M-DR-X-SWRGYB**

Notes

① Maintained pushbuttons can be converted in the field to momentary operation by switching the locking ring, which is accessible through the side of the operator body.

② Includes contact block mounting adapter.

③ Buttonless operator comes with three color buttons (black, red, green).

④ Buttonless operator comes with all six color buttons (black, white, red, green, yellow, blue).

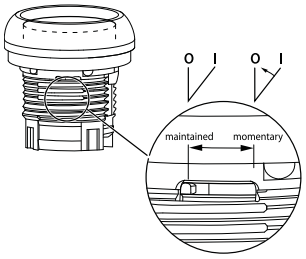

Note: This pilot device features a selectable function switch that enables the device to be set to either maintained or momentary operation.

Non-Illuminated Pushbuttons, Flush, Maintained ①

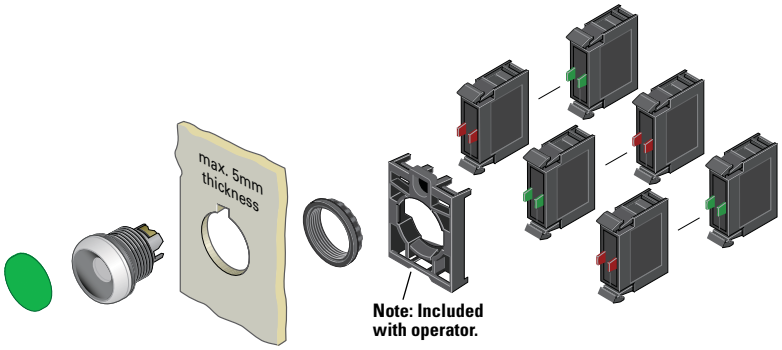

Components

M22-XD-S

Button Plates ②

Color	Inscription	Catalog Number
Black	—	**M22-XD-S** ③
	Custom	**M22-XD-S-ETCH** ④
	STOP	**M22-XD-S-GB0**
	START	**M22-XD-S-GB1**
	CLOSE	**M22-XD-S-GB2**
	UP	**M22-XD-S-GB3**
	DOWN	**M22-XD-S-GB4**
	OFF	**M22-XD-S-GB5**
	ON	**M22-XD-S-GB6**
	TEST	**M22-XD-S-GB9**
	FORWARD	**M22-XD-S-GB15**
	REVERSE	**M22-XD-S-GB16**
	RAISE	**M22-XD-S-GB17**
	LOWER	**M22-XD-S-GB18**
	◎	**M22-XD-S-X0**
	ⓘ	**M22-XD-S-X1**
	ⓘⓘ	**M22-XD-S-X2**
	⊕	**M22-XD-S-X4**
	⊖	**M22-XD-S-X5**
	ⓣ	**M22-XD-S-X7**
Red	—	**M22-XD-R** ③
	Custom	**M22-XD-R-ETCH** ④
	STOP	**M22-XD-R-GB0**
	OFF	**M22-XD-R-GB5**
	◎	**M22-XD-R-X0**
Green	—	**M22-XD-G** ③
	Custom	**M22-XD-G-ETCH** ④
	START	**M22-XD-G-GB1**
	ON	**M22-XD-G-GB6**
	ⓘ	**M22-XD-G-X1**
Blue	—	**M22-XD-B** ③
	Custom	**M22-XD-B-ETCH** ④
	RESET	**M22-XD-B-GB14**
	Ⓡ	**M22-XD-B-X6**
White	—	**M22-XD-W** ③
	Custom	**M22-XD-W-ETCH** ④
	START	**M22-XD-W-GB1**
	ⓘ	**M22-XD-W-X1**
Yellow	—	**M22-XD-Y** ③
	Custom	**M22-XD-Y-ETCH** ④
Black, red, green	—	**M22-XD-SRG**
Black, white, red, green, yellow, blue	—	**M22-XD-SWRGYB**

Buttonless Operator

Silver Bezel Catalog Number ⑤
M22-DR-X

Black Bezel Catalog Number ⑤
M22S-DR-X

Metal Bezel Catalog Number ⑤
M22M-DR-X

M22-K10

M22-FK01

Contact Blocks ②

Terminal Type	Contact Configuration ⑥	Catalog Number
Screw	NO	**M22-K10**
	NO, early-make	**M22-K10P**
	NC	**M22-K01**
	NC, late-break	**M22-K01D**
Spring-cage	NO	**M22-CK10**
	NC	**M22-CK01**
	NC, late-break	**M22-CK01D**
	2NO	**M22-CK20**
	2NC	**M22-CK02**
	NO-NC	**M22-CK11**
	NC	**M22-FK01** ⑦
	NO	**M22-FK10** ⑦

Notes

① Maintained pushbuttons can be converted in the field to momentary operation by switching the locking ring, which is accessible through the side of the operator body.
② For complete listing of available button plates and contact blocks, see Accessories, **Pages V7-T1-105** to **V7-T1-110**.
③ Minimum order quantity of (10).
④ When ordering, specify inscription per catalog number suffix from the Symbols Library (see **Pages V7-T1-123** to **V7-T1-130**) into the Order Notes. For example, M22-XD-S-ETCH; Order Notes: Mark with symbol X91, Line item #_.
⑤ Includes contact block mounting adapter.
⑥ All NC contact blocks are positively driven contact. ⊖
⑦ Additional contacts may not be stacked behind M22-F type contact blocks, M22-F can be stacked behind standard M22 contacts only.

1

Non-Illuminated Pushbuttons, Extended, Momentary

M22-DH-R-K10

M22S-DH-R-K10

M22M-DH-R-K10

Complete Devices

Button Color	Contact Block Configuration ①	Silver Bezel Catalog Number	Black Bezel Catalog Number	Metal Bezel Catalog Number
Red	NO	**M22-DH-R-K10**	**M22S-DH-R-K10**	**M22M-DH-R-K10**
	NC	**M22-DH-R-K01**	**M22S-DH-R-K01**	**M22M-DH-R-K01**
	2NO	**M22-DH-R-K20**	**M22S-DH-R-K20**	**M22M-DH-R-K20**
	2NC	**M22-DH-R-K02**	**M22S-DH-R-K02**	**M22M-DH-R-K02**
	1NO-1NC	**M22-DH-R-K11**	**M22S-DH-R-K11**	**M22M-DH-R-K11**

M22-DGH-R-K10

Silver Guarded

Button Color	Contact Block Configuration ①	Silver Bezel Catalog Number
Red	NO	**M22-DGH-R-K10**
	NC	**M22-DGH-R-K01**
	2NO	**M22-DGH-R-K20**
	2NC	**M22-DGH-R-K02**
	1NO-1NC	**M22-DGH-R-K11**

M22-DH-R

M22S-DH-R

M22M-DH-R

Operators Only ②

Button Color	Inscription	Silver Bezel Catalog Number	Black Bezel Catalog Number	Metal Bezel Catalog Number
Black	—	**M22-DH-S**	**M22S-DH-S**	**M22M-DH-S**
Red	—	**M22-DH-R**	**M22S-DH-R**	**M22M-DH-R**
	STOP	**M22-DH-R-GB0**	**M22S-DH-R-GB0**	**M22M-DH-R-GB0**
	◎	**M22-DH-R-X0**	**M22S-DH-R-X0**	**M22M-DH-R-X0**
Green	—	**M22-DH-G**	**M22S-DH-G**	**M22M-DH-G**
White	—	**M22-DH-W**	**M22S-DH-W**	**M22M-DH-W**
Blue	—	**M22-DH-B**	**M22S-DH-B**	**M22M-DH-B**
Yellow	—	**M22-DH-Y**	**M22S-DH-Y**	**M22M-DH-Y**
③	—	**M22-DH-X-SRG**	**M22S-DH-X-SRG**	**M22M-DH-X-SRG**
④	—	**M22-DH-X-SWRGYB**	**M22S-DH-X-SWRGYB**	**M22M-DH-X-SWRGYB**

M22-DGH-R-K10

Silver Guarded

Button Color	Inscription	Silver Bezel Catalog Number
Black	—	**M22-DGH-S**
Red	—	**M22-DGH-R**
	STOP	**M22-DGH-R-GB0**
	◎	**M22-DGH-R-X0**
Green	—	**M22-DGH-G**
White	—	**M22-DGH-W**
Blue	—	**M22-DGH-B**
Yellow	—	**M22-DGH-Y**

Notes

① All NC contact blocks are positively driven contact. ⊖

② Includes contact block mounting adapter.

③ Buttonless operator comes with three color buttons (black, red, green).

④ Buttonless operator comes with all six color buttons (black, white, red, green, yellow, blue).

Non-Illuminated Pushbuttons, Extended, Momentary

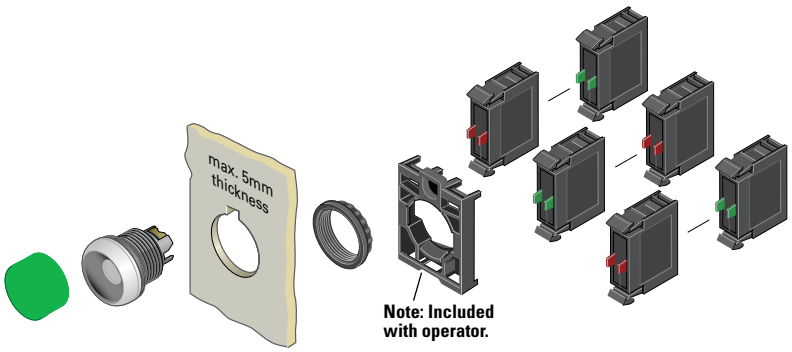

Components

M22-XDH-R

Button Plates ①

Color	Inscription	Catalog Number
Black	—	**M22-XDH-S** ②
	Custom	**M22-XDH-S-ETCH** ③
	STOP	**M22-XDH-S-GB0**
	START	**M22-XDH-S-GB1**
	CLOSE	**M22-XDH-S-GB2**
	UP	**M22-XDH-S-GB3**
	DOWN	**M22-XDH-S-GB4**
	OFF	**M22-XDH-S-GB5**
	ON	**M22-XDH-S-GB6**
	TEST	**M22-XDH-S-GB9**
	FORWARD	**M22-XDH-S-GB15**
	REVERSE	**M22-XDH-S-GB16**
	RAISE	**M22-XDH-S-GB17**
	LOWER	**M22-XDH-S-GB18**
	◎	**M22-XDH-S-X0**
	⏀	**M22-XDH-S-X1**
	⏁	**M22-XDH-S-X2**
	⊕	**M22-XDH-S-X4**
	⊖	**M22-XDH-S-X5**
	⏂	**M22-XDH-S-X7**
Red	—	**M22-XDH-R** ②
	Custom	**M22-XDH-R-ETCH** ③
	STOP	**M22-XDH-R-GB0**
	OFF	**M22-XDH-R-GB5**
	◎	**M22-XDH-R-X0**
Green	—	**M22-XDH-G** ②
	Custom	**M22-XDH-G-ETCH** ③
	START	**M22-XDH-G-GB1**
	ON	**M22-XDH-G-GB6**
	⏀	**M22-XDH-G-X1**
Blue	—	**M22-XDH-B** ②
	Custom	**M22-XDH-B-ETCH** ③
	RESET	**M22-XDH-B-GB14**
	Ⓡ	**M22-XDH-B-X6**
White	—	**M22-XDH-W** ②
	Custom	**M22-XDH-W-ETCH** ③
	START	**M22-XDH-W-GB1**
	⏀	**M22-XDH-W-X1**
Yellow	—	**M22-XDH-Y** ②
	Custom	**M22-XDH-Y-ETCH** ③
Black, red, green	—	**M22-XDH-SRG**
Black, white, red, green, yellow, blue	—	**M22-XDH-SWRGYB**

Buttonless Operator

Silver Bezel Catalog Number ④
M22-D-X

Black Bezel Catalog Number ④
M22S-D-X

Metal Bezel Catalog Number ④
M22M-D-X

Silver Guarded

Silver Bezel Catalog Number ④
M22-DG-X

M22-K10

M22-FK01

Contact Blocks ①

Terminal Type	Contact Configuration ⑤	Catalog Number
Screw	NO	**M22-K10**
	NO, early-make	**M22-K10P**
	NC	**M22-K01**
	NC, late-break	**M22-K01D**
Spring-cage	NO	**M22-CK10**
	NC	**M22-CK01**
	NC, late-break	**M22-CK01D**
	2NO	**M22-CK20**
	2NC	**M22-CK02**
	NO-NC	**M22-CK11**
	NC	**M22-FK01** ⑥
	NO	**M22-FK10** ⑥

Notes

① For complete listing of available button plates and contact blocks, see Accessories, **Pages V7-T1-105** to **V7-T1-110**.
② Minimum order quantity of (10).
③ When ordering, specify inscription per catalog number suffix from the Symbols Library (see **Pages V7-T1-123** to **V7-T1-130**) into the Order Notes.
For example, M22-XDH-S-ETCH; Order Notes: Mark with symbol X91, Line item #_.
④ Includes contact block mounting adapter.
⑤ All NC contact blocks are positively driven contact. ⊖
⑥ Additional contacts may not be stacked behind M22-F type contact blocks, M22-F can be stacked behind standard M22 contacts only.

1

Non-Illuminated Pushbuttons, Extended, Maintained ①

M22-DRH-W

M22S-DRH-W

M22M-DRH-W

Operators Only ②

Button Color	Silver Bezel Catalog Number	Black Bezel Catalog Number	Metal Bezel Catalog Number
Black	**M22-DRH-S**	**M22S-DRH-S**	**M22M-DRH-S**
Red	**M22-DRH-R**	**M22S-DRH-R**	**M22M-DRH-R**
Green	**M22-DRH-G**	**M22S-DRH-G**	**M22M-DRH-G**
White	**M22-DRH-W**	**M22S-DRH-W**	**M22M-DRH-W**
Blue	**M22-DRH-B**	**M22S-DRH-B**	**M22M-DRH-B**
Yellow	**M22-DRH-Y**	**M22S-DRH-Y**	**M22M-DRH-Y**
③	**M22-DRH-X-SRG**	**M22S-DRH-X-SRG**	**M22M-DRH-X-SRG**
④	**M22-DRH-X-SWRGYB**	**M22S-DRH-X-SWRGYB**	**M22M-DRH-X-SWRGYB**

Notes

① Maintained pushbuttons can be converted in the field to momentary operation by switching the locking ring, which is accessible through the side of the operator body.

② Includes contact block mounting adapter.

③ Buttonless operator comes with three color buttons (black, red, green).

④ Buttonless operator comes with all six color buttons (black, white, red, green, yellow, blue).

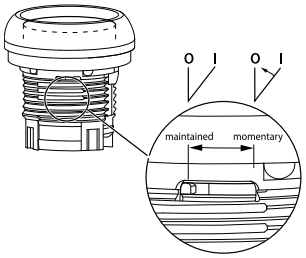

Note: This pilot device features a selectable function switch that enables the device to be set to either maintained or momentary operation.

Non-Illuminated Pushbuttons, Extended, Maintained ①

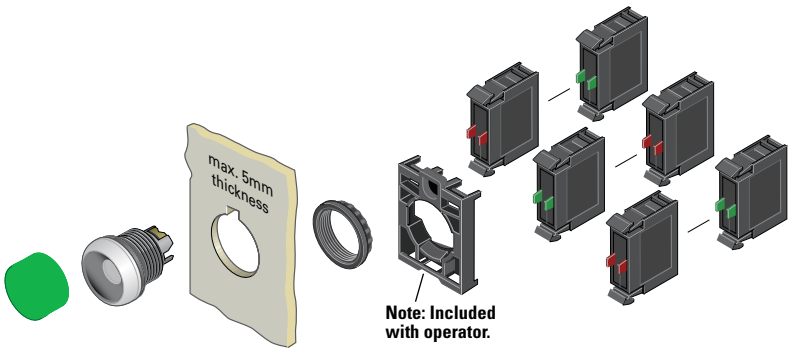

Components

M22-XDH-W

Button Plates ②

Color	Inscription	Catalog Number
Black	—	**M22-XDH-S** ③
	Custom	**M22-XDH-S-ETCH** ④
	STOP	**M22-XDH-S-GB0**
	START	**M22-XDH-S-GB1**
	CLOSE	**M22-XDH-S-GB2**
	UP	**M22-XDH-S-GB3**
	DOWN	**M22-XDH-S-GB4**
	OFF	**M22-XDH-S-GB5**
	ON	**M22-XDH-S-GB6**
	TEST	**M22-XDH-S-GB9**
	FORWARD	**M22-XDH-S-GB15**
	REVERSE	**M22-XDH-S-GB16**
	RAISE	**M22-XDH-S-GB17**
	LOWER	**M22-XDH-S-GB18**
	◎	**M22-XDH-S-X0**
	⏀	**M22-XDH-S-X1**
	⏁	**M22-XDH-S-X2**
	⊕	**M22-XDH-S-X4**
	⊖	**M22-XDH-S-X5**
	⏂	**M22-XDH-S-X7**
Red	—	**M22-XDH-R** ③
	Custom	**M22-XDH-R-ETCH** ④
	STOP	**M22-XDH-R-GB0**
	OFF	**M22-XDH-R-GB5**
	◎	**M22-XDH-R-X0**
Green	—	**M22-XDH-G** ③
	Custom	**M22-XDH-G-ETCH** ④
	START	**M22-XDH-G-GB1**
	ON	**M22-XDH-G-GB6**
	⏀	**M22-XDH-G-X1**
Blue	—	**M22-XDH-B** ③
	Custom	**M22-XDH-B-ETCH** ④
	RESET	**M22-XDH-B-GB14**
	Ⓡ	**M22-XDH-B-X6**
White	—	**M22-XDH-W** ③
	Custom	**M22-XDH-W-ETCH** ④
	START	**M22-XDH-W-GB1**
	⏀	**M22-XDH-W-X1**
Yellow	—	**M22-XDH-Y** ③
	Custom	**M22-XDH-Y-ETCH** ④
Black, red, green	—	**M22-XDH-SRG**
Black, white, red, green, yellow, blue	—	**M22-XDH-SWRGYB**

Buttonless Operator

Silver Bezel Catalog Number ⑤
M22-DR-X

Black Bezel Catalog Number ⑤
M22S-DR-X

Metal Bezel Catalog Number ⑤
M22M-DR-X

M22-K10

M22-FK01

Contact Blocks ②

Terminal Type	Contact Configuration ⑥	Catalog Number
Screw	NO	**M22-K10**
	NO, early-make	**M22-K10P**
	NC	**M22-K01**
	NC, late-break	**M22-K01D**
Spring-cage	NO	**M22-CK10**
	NC	**M22-CK01**
	NC, late-break	**M22-CK01D**
	2NO	**M22-CK20**
	2NC	**M22-CK02**
	NO-NC	**M22-CK11**
	NC	**M22-FK01** ⑦
	NO	**M22-FK10** ⑦

Notes

① Maintained pushbuttons can be converted in the field to momentary operation by switching the locking ring, which is accessible through the side of the operator body.
② For complete listing of available button plates and contact blocks, see Accessories, **Pages V7-T1-105** to **V7-T1-110**.
③ Minimum order quantity of (10).
④ When ordering, specify inscription per catalog number suffix from the Symbols Library (see **Pages V7-T1-123** to **V7-T1-130**) into the Order Notes.
For example, M22-XDH-S-ETCH; Order Notes: Mark with symbol X91, Line item #_.
⑤ Includes contact block mounting adapter.
⑥ All NC contact blocks are positively driven contact. ⊖
⑦ Additional contacts may not be stacked behind M22-F type contact blocks, M22-F can be stacked behind standard M22 contacts only.

1

Catalog Number Selection

Catalog Number Selection is for illustrative purposes only and not to be used to create new catalog numbers.

Illuminated Pushbuttons

M22 – DRL – R – GB0 – K10 – 230R

Bezel

M22 = Silver
M22S = Black
M22M = Metal

Operator Type

DL = Illuminated flush momentary
DLH = Illuminated extended momentary
DGL = Illuminated flush momentary with guard ①
DRL = Illuminated flush maintained
DGLH = Illuminated extended momentary with guard ①
DRLH = Illuminated extended maintained

① Silver bezel only.

Lens Color

W = White
R = Red
G = Green
Y = Yellow
B = Blue
A = Amber

Contact Blocks

K10 = 1NO
K01 = 1NC
K20 = 2NO
K02 = 2NC
K11 = 1NO-1NC
K30 = 3NO
K03 = 3NC
K21 = 2NO-1NC
K12 = 1NO-2NC

Light Units

12–30 Vac/Vdc
W = White
R = Red
G = Green
B = Blue
85–264 Vac
230W = White
230R = Red
230G = Green
230B = Blue

Inscription

GB0 = STOP
GB1 = START
GB2 = CLOSE
GB3 = UP
GB4 = DOWN
GB5 = OFF
GB6 = ON
GB14 = RESET
GB15 = FORWARD
GB16 = REVERSE
X0 = ⓪
X1 = ①
X4 = ⊕
X5 = ⊖
X6 = Ⓡ

Product Selection

Illuminated Pushbuttons, Flush, Momentary

M22-DL-G-K01-G

M22S-DL-G-K01-G

M22M-DL-G-K01-G

Complete Devices

Button Color	Contact Block Configuration ①	Light Unit Voltage	Silver Bezel Catalog Number	Black Bezel Catalog Number	Metal Bezel Catalog Number
Red	NC	12–30 Vac/Vdc	**M22-DL-R-K01-R**	**M22S-DL-R-K01-R**	**M22M-DL-R-K01-R**
	NC	85–264 Vac	**M22-DL-R-K01-230R**	**M22S-DL-R-K01-230R**	**M22M-DL-R-K01-230R**
	2NC	12–30 Vac/Vdc	**M22-DL-R-K02-R**	**M22S-DL-R-K02-R**	**M22M-DL-R-K02-R**
	2NC	85–264 Vac	**M22-DL-R-K02-230R**	**M22S-DL-R-K02-230R**	**M22M-DL-R-K02-230R**
	1NO/1NC	12–30 Vac/Vdc	**M22-DL-R-K11-R**	**M22S-DL-R-K11-R**	**M22M-DL-R-K11-R**
	1NO/1NC	85–264 Vac	**M22-DL-R-K11-230R**	**M22S-DL-R-K11-230R**	**M22M-DL-R-K11-230R**
Green	NO	12–30 Vac/Vdc	**M22-DL-G-K10-G**	**M22S-DL-G-K10-G**	**M22M-DL-G-K10-G**
	NO	85–264 Vac	**M22-DL-G-K10-230G**	**M22S-DL-G-K10-230G**	**M22M-DL-G-K10-230G**
	2NO	12–30 Vac/Vdc	**M22-DL-G-K20-G**	**M22S-DL-G-K20-G**	**M22M-DL-G-K20-G**
	2NO	85–264 Vac	**M22-DL-G-K20-230G**	**M22S-DL-G-K20-230G**	**M22M-DL-G-K20-230G**
	1NO/1NC	12–30 Vac/Vdc	**M22-DL-G-K11-G**	**M22S-DL-G-K11-G**	**M22M-DL-G-K11-G**
	1NO/1NC	85–264 Vac	**M22-DL-G-K11-230G**	**M22S-DL-G-K11-230G**	**M22M-DL-G-K11-230G**
White	NO	12–30 Vac/Vdc	**M22-DL-W-K10-W**	**M22S-DL-W-K10-W**	—
	NO	85–264 Vac	**M22-DL-W-K10-230W**	**M22S-DL-W-K10-230W**	**M22M-DL-W-K10-230W**
	2NO	12–30 Vac/Vdc	**M22-DL-W-K20-W**	**M22S-DL-W-K20-W**	—
	2NO	85–264 Vac	**M22-DL-W-K20-230W**	**M22S-DL-W-K20-230W**	**M22M-DL-W-K20-230W**
	1NO/1NC	12–30 Vac/Vdc	**M22-DL-W-K11-W**	**M22S-DL-W-K11-W**	—
	1NO/1NC	85–264 Vac	**M22-DL-W-K11-230W**	**M22S-DL-W-K11-230W**	**M22M-DL-W-K11-230W**

Note

① All NC contact blocks are positively driven contact. ⊖

1

Illuminated Pushbuttons, Flush, Momentary

M22-DL-G

M22S-DL-G

M22M-DL-G

Operators Only ①

Button Color	Silver Bezel Catalog Number	Black Bezel Catalog Number	Metal Bezel Catalog Number
Red	**M22-DL-R**	**M22S-DL-R**	**M22M-DL-R**
Green	**M22-DL-G**	**M22S-DL-G**	**M22M-DL-G**
White	**M22-DL-W**	**M22S-DL-W**	**M22M-DL-W**
Blue	**M22-DL-B**	**M22S-DL-B**	**M22M-DL-B**
Yellow	**M22-DL-Y**	**M22S-DL-Y**	**M22M-DL-Y**
Amber	**M22-DL-A**	**M22S-DL-A**	**M22M-DL-A**

M22-DGL-G

Silver Guarded

Button Color	Silver Bezel Catalog Number
Red	**M22-DGL-R**
Green	**M22-DGL-G**
White	**M22-DGL-W**
Blue	**M22-DGL-B**
Yellow	**M22-DGL-Y**

Note

① Includes contact block mounting adapter.

Illuminated Pushbuttons, Flush, Momentary

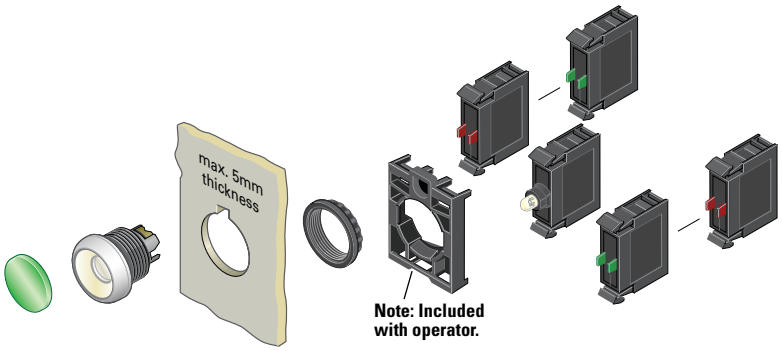

Components

M22-XDL-G

Button Lenses ①

Color	Inscription	Catalog Number
Red	—	**M22-XDL-R** ②
	Custom	**M22-XDL-R-ETCH** ③
	STOP	**M22-XDL-R-GB0**
	OFF	**M22-XDL-R-GB5**
	◎	**M22-XDL-R-X0**
Green	—	**M22-XDL-G** ②
	Custom	**M22-XDL-G-ETCH** ③
	START	**M22-XDL-G-GB1**
	ON	**M22-XDL-G-GB6**
	Ⓘ	**M22-XDL-G-X1**
Blue	—	**M22-XDL-B** ②
	Custom	**M22-XDL-B-ETCH** ③
	RESET	**M22-XDL-B-GB14**
	Ⓡ	**M22-XDL-B-X6**
White	—	**M22-XDL-W** ②
	Custom	**M22-XDL-W-ETCH** ③
Yellow	—	**M22-XDL-Y** ②
	Custom	**M22-XDL-Y-ETCH** ③
Amber	—	**M22-XDL-A**
	Custom	**M22-XDL-A-ETCH**

M22-DL-X

M22S-DL-X

M22M-DL-X

Buttonless Operator

Silver Bezel Catalog Number ④	Black Bezel Catalog Number ④	Metal Bezel Catalog Number ④
M22-DL-X	**M22S-DL-X**	**M22M-DL-X**

M22-DGL-X

Silver Guarded

Silver Bezel Catalog Number ④
M22-DGL-X

M22-LED-W

M22-FLED-_

Light Units ①

Terminal Type	LED Color	Light Unit Voltage	Catalog Number
Screw	White	12–30 Vac/Vdc	**M22-LED-W**
	Red		**M22-LED-R**
	Green		**M22-LED-G**
	Blue		**M22-LED-B**
Screw	White	85–264 Vac	**M22-LED230-W**
	Red		**M22-LED230-R**
	Green		**M22-LED230-G**
	Blue		**M22-LED230-B**
Spring-cage	White	12–30 Vac/Vdc	**M22-FLED-W**
	Red		**M22-FLED-R**
	Green		**M22-FLED-G**
	Blue		**M22-FLED-B**
	Red/Green/Yellow	24 Vdc	**M22-FLED-RG** ⑤
	Red, Green, Blue, Yellow, White, Violet, Turquoise		**M22-FLED-RGB** ⑤

M22-K10

M22-FK01

Contact Blocks ①

Terminal Type	Contact Configuration ⑥	Catalog Number
Screw	NO	**M22-K10**
	NO, early-make	**M22-K10P**
	NC	**M22-K01**
	NC, late-break	**M22-K01D**
Spring-cage	NO	**M22-CK10**
	NC	**M22-CK01**
	NC, late-break	**M22-CK01D**
	2NO	**M22-CK20**
	2NC	**M22-CK02**
	NO-NC	**M22-CK11**
	NC	**M22-FK01** ⑦
	NO	**M22-FK10** ⑦

Notes

① For complete listing of available button lenses, light units and contact blocks, see Accessories, **Pages V7-T1-105** to **V7-T1-110**.
② Minimum order quantity of (10).
③ When ordering, specify inscription per catalog number suffix from the Symbols Library (see **Pages V7-T1-123** to **V7-T1-130**) into the Order Notes. For example, M22-XDL-R-ETCH; Order Notes: Mark with symbol X91, Line item #_.
④ Includes contact block mounting adapter.
⑤ Please see color input key on **Page V7-T1-108**.
⑥ All NC contact blocks are positively driven contact. ⊖
⑦ Additional contacts may not be stacked behind M22-F type contact blocks, M22-F can be stacked behind standard M22 contacts only.

1

Illuminated Pushbuttons, Flush, Maintained ①

M22-DRL-W-K10-W

M22S-DRL-W-K10-W

M22M-DRL-W-K10-W

Complete Devices

Button Color	Contact Block Configuration ②	Light Unit Voltage	Silver Bezel Catalog Number	Black Bezel Catalog Number	Metal Bezel Catalog Number
White	NO	12–30 Vac/Vdc	**M22-DRL-W-K10-W**	**M22S-DRL-W-K10-W**	**M22M-DRL-W-K10-W**
	NO	85–264 Vac	**M22-DRL-W-K10-230W**	**M22S-DRL-W-K10-230W**	**M22M-DRL-W-K10-230W**
	NC	12–30 Vac/Vdc	**M22-DRL-W-K01-W**	**M22S-DRL-W-K01-W**	**M22M-DRL-W-K01-W**
	NC	85–264 Vac	**M22-DRL-W-K01-230W**	**M22S-DRL-W-K01-230W**	**M22M-DRL-W-K01-230W**
	2NO	12–30 Vac/Vdc	**M22-DRL-W-K20-W**	**M22S-DRL-W-K20-W**	**M22M-DRL-W-K20-W**
	2NO	85–264 Vac	**M22-DRL-W-K20-230W**	**M22S-DRL-W-K20-230W**	**M22M-DRL-W-K20-230W**
	2NC	12–30 Vac/Vdc	**M22-DRL-W-K02-W**	**M22S-DRL-W-K02-W**	**M22M-DRL-W-K02-W**
	2NC	85–264 Vac	**M22-DRL-W-K02-230W**	**M22S-DRL-W-K02-230W**	**M22M-DRL-W-K02-230W**
	1NO/1NC	12–30 Vac/Vdc	**M22-DRL-W-K11-W**	**M22S-DRL-W-K11-W**	**M22M-DRL-W-K11-W**
	1NO/1NC	85–264 Vac	**M22-DRL-W-K11-230W**	**M22S-DRL-W-K11-230W**	**M22M-DRL-W-K11-230W**

M22-DRL-W

M22S-DRL-W

M22M-DRL-W

Operators Only ③

Button Color	Silver Bezel Catalog Number	Black Bezel Catalog Number	Metal Bezel Catalog Number
Red	**M22-DRL-R**	**M22S-DRL-R**	**M22M-DRL-R**
Green	**M22-DRL-G**	**M22S-DRL-G**	**M22M-DRL-G**
White	**M22-DRL-W**	**M22S-DRL-W**	**M22M-DRL-W**
Blue	**M22-DRL-B**	**M22S-DRL-B**	**M22M-DRL-B**
Yellow	**M22-DRL-Y**	**M22S-DRL-Y**	**M22M-DRL-Y**
Amber	**M22-DRL-A**	**M22S-DRL-A**	**M22M-DRL-A**

Notes

① Maintained pushbuttons can be converted in the field to momentary operation by switching the locking ring, which is accessible through the side of the operator body.

② All NC contact blocks are positively driven contact. ⊖

③ Includes contact block mounting adapter.

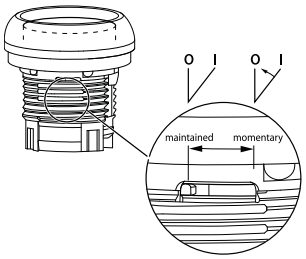

Note: This pilot device features a selectable function switch that enables the device to be set to either maintained or momentary operation.

Illuminated Pushbuttons, Flush, Maintained ①

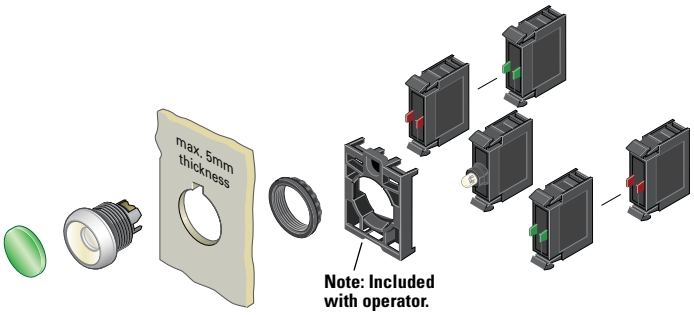

Components

M22-XDL-W

Button Lenses ②

Color	Inscription	Catalog Number
Red	—	**M22-XDL-R** ③
	Custom	**M22-XDL-R-ETCH** ④
	STOP	**M22-XDL-R-GB0**
	OFF	**M22-XDL-R-GB5**
	◎	**M22-XDL-R-X0**
Green	—	**M22-XDL-G** ③
	Custom	**M22-XDL-G-ETCH** ④
	START	**M22-XDL-G-GB1**
	ON	**M22-XDL-G-GB6**
	Ⓘ	**M22-XDL-G-X1**
Blue	—	**M22-XDL-B** ③
	Custom	**M22-XDL-B-ETCH** ④
	RESET	**M22-XDL-B-GB14**
	Ⓡ	**M22-XDL-B-X6**
White	—	**M22-XDL-W** ③
	Custom	**M22-XDL-W-ETCH** ④
Yellow	—	**M22-XDL-Y** ③
	Custom	**M22-XDL-Y-ETCH** ④
Amber	—	**M22-XDL-A**
	Custom	**M22-XDL-A-ETCH**

M22-DRL-X

M22S-DRL-X

M22M-DRL-X

Buttonless Operator

Silver Bezel Catalog Number ⑤	Black Bezel Catalog Number ⑤	Metal Bezel Catalog Number ⑤
M22-DRL-X	**M22S-DRL-X**	**M22M-DRL-X**

M22-LED-W

M22-FLED-_

Light Units ②

Terminal Type	LED Color	Light Unit Voltage	Catalog Number
Screw	White	12–30 Vac/Vdc	**M22-LED-W**
	Red		**M22-LED-R**
	Green		**M22-LED-G**
	Blue		**M22-LED-B**
Screw	White	85–264 Vac	**M22-LED230-W**
	Red		**M22-LED230-R**
	Green		**M22-LED230-G**
	Blue		**M22-LED230-B**
Spring-cage	White	12–30 Vac/Vdc	**M22-FLED-W**
	Red		**M22-FLED-R**
	Green		**M22-FLED-G**
	Blue		**M22-FLED-B**
	Red/Green/Yellow	24 Vdc	**M22-FLED-RG** ⑥
	Red, Green, Blue, Yellow, White, Violet, Turquoise		**M22-FLED-RGB** ⑥

M22-K10

M22-FK01

Contact Blocks ②

Terminal Type	Contact Configuration ⑦	Catalog Number
Screw	NO	**M22-K10**
	NO, early-make	**M22-K10P**
	NC	**M22-K01**
	NC, late-break	**M22-K01D**
Spring-cage	NO	**M22-CK10**
	NC	**M22-CK01**
	NC, late-break	**M22-CK01D**
	2NO	**M22-CK20**
	2NC	**M22-CK02**
	NO-NC	**M22-CK11**
	NC	**M22-FK01** ⑧
	NO	**M22-FK10** ⑧

Notes

① Maintained pushbuttons can be converted in the field to momentary operation by switching the locking ring, which is accessible through the side of the operator body.
② For complete listing of available button lenses, light units and contact blocks, see Accessories, **Pages V7-T1-105** to **V7-T1-110**.
③ Minimum order quantity of (10).
④ When ordering, specify inscription per catalog number suffix from the Symbols Library (see **Pages V7-T1-123** to **V7-T1-130**) into the Order Notes.
For example, M22-XDL-R-ETCH; Order Notes: Mark with symbol X91, Line item #_.
⑤ Includes contact block mounting adapter.
⑥ Please see color input key on **Page V7-T1-108**.
⑦ All NC contact blocks are positively driven contact. ⊖
⑧ Additional contacts may not be stacked behind M22-F type contact blocks, M22-F can be stacked behind standard M22 contacts only.

1

Illuminated Pushbuttons, Extended, Momentary

M22-DLH-R-K11-R

M22S-DLH-R-K11-R

Complete Devices

Button Color	Contact Block Configuration ①	Light Unit Voltage	Silver Bezel Catalog Number	Black Bezel Catalog Number	Metal Bezel Catalog Number
Red	1NO/1NC	12–30 Vac/Vdc	**M22-DLH-R-K11-R**	**M22S-DLH-R-K11-R**	**M22M-DLH-R-K11-R**
	1NO/1NC	85–264 Vac	**M22-DLH-R-K11-230R**	**M22S-DLH-R-K11-230R**	**M22M-DLH-R-K11-230R**
Green	2NO	12–30 Vac/Vdc	**M22-DLH-G-K20-G**	**M22S-DLH-G-K20-G**	**M22M-DLH-G-K20-G**
	2NO	85–264 Vac	**M22-DLH-G-K20-230G**	**M22S-DLH-G-K20-230G**	**M22M-DLH-G-K20-230G**
White	2NO	12–30 Vac/Vdc	**M22-DLH-W-K20-W**	**M22S-DLH-W-K20-W**	**M22M-DLH-W-K20-W**
	2NO	85–264 Vac	**M22-DLH-W-K20-230W**	**M22S-DLH-W-K20-230W**	**M22M-DLH-W-K20-230W**

Complete Press-to-Test Units

Button Color	Light Unit Voltage	Silver Bezel Catalog Number	Black Bezel Catalog Number
Red	12–30 Vac/Vdc	**M22-T-R-R**	**M22S-T-R-R**
Blue		**M22-T-B-B**	**M22S-T-B-B**
Yellow		**M22-T-Y-W**	**M22S-T-Y-W**
Green		**M22-T-G-G**	**M22S-T-G-G**
White		**M22-T-W-W**	**M22S-T-W-W**
Red	85–264 Vac	**M22-T-R-230R**	**M22S-T-R-230R**
Blue		**M22-T-R-230B**	**M22S-T-B-230B**
Yellow		**M22-T-Y-230W**	**M22S-T-Y-230W**
Green		**M22-T-G-230G**	**M22S-T-G-230G**
White		**M22-T-W-230W**	**M22S-T-W-230W**

M22-DLH-R

M22S-DLH-R

M22M-DLH-R

Operators Only ②

Button Color	Silver Bezel Catalog Number	Black Bezel Catalog Number	Metal Bezel Catalog Number
Red	**M22-DLH-R**	**M22S-DLH-R**	**M22M-DLH-R**
Green	**M22-DLH-G**	**M22S-DLH-G**	**M22M-DLH-G**
White	**M22-DLH-W**	**M22S-DLH-W**	**M22M-DLH-W**
Blue	**M22-DLH-B**	**M22S-DLH-B**	**M22M-DLH-B**
Yellow	**M22-DLH-Y**	**M22S-DLH-Y**	**M22M-DLH-Y**
Amber	**M22-DLH-A**	**M22S-DLH-A**	**M22M-DLH-A**

M22-DGLH-R

Silver Guarded

Button Color	Silver Bezel Catalog Number
Red	**M22-DGLH-R**
Green	**M22-DGLH-G**
White	**M22-DGLH-W**
Blue	**M22-DGLH-B**
Yellow	**M22-DGLH-Y**

Notes

① All NC contact blocks are positively driven contact. ⊖

② Includes contact block mounting adapter.

Illuminated Pushbuttons, Extended, Momentary

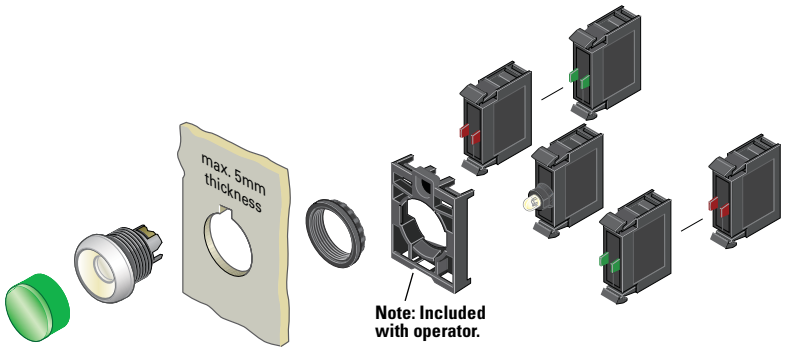

Components

M22-XDH-R

Button Lenses ①

Color	Inscription	Catalog Number
Red	—	**M22-XDLH-R** ②
	Custom	**M22-XDLH-R-ETCH** ③
	STOP	**M22-XDLH-R-GB0**
	OFF	**M22-XDLH-R-GB5**
	◎	**M22-XDLH-R-X0**
Green	—	**M22-XDLH-G** ②
	Custom	**M22-XDLH-G-ETCH** ③
	START	**M22-XDLH-G-GB1**
	ON	**M22-XDLH-G-GB6**
	ⓘ	**M22-XDLH-G-X1**
Blue	—	**M22-XDLH-B** ②
	Custom	**M22-XDLH-B-ETCH** ③
	RESET	**M22-XDLH-B-GB14**
	Ⓡ	**M22-XDLH-B-X6**
White	—	**M22-XDLH-W** ②
	Custom	**M22-XDLH-W-ETCH** ③
Yellow	—	**M22-XDLH-Y** ②
	Custom	**M22-XDLH-Y-ETCH** ③
Amber	—	**M22-XDLH-A**
	Custom	**M22-XDLH-A-ETCH**

M22-DL-X

M22S-DL-X

M22M-DL-X

Buttonless Operator

Silver Bezel Catalog Number ④	Black Bezel Catalog Number ④	Metal Bezel Catalog Number ④
M22-DL-X	**M22S-DL-X**	**M22M-DL-X**

M22-DGL-X

Silver Guarded

Silver Bezel Catalog Number ④
M22-DGL-X

M22-LED-W

M22-FLED-_

Light Units ①

Terminal Type	LED Color	Light Unit Voltage	Catalog Number
Screw	White	12–30 Vac/Vdc	**M22-LED-W**
	Red		**M22-LED-R**
	Green		**M22-LED-G**
	Blue		**M22-LED-B**
Screw	White	85–264 Vac	**M22-LED230-W**
	Red		**M22-LED230-R**
	Green		**M22-LED230-G**
	Blue		**M22-LED230-B**
Spring-cage	White	12–30 Vac/Vdc	**M22-FLED-W**
	Red		**M22-FLED-R**
	Green		**M22-FLED-G**
	Blue		**M22-FLED-B**
	Red/Green/Yellow	24 Vdc	**M22-FLED-RG** ⑤
	Red, Green, Blue, Yellow, White, Violet, Turquoise		**M22-FLED-RGB** ⑤

M22-K10

M22-FK01

Contact Blocks ①

Terminal Type	Contact Configuration ⑥	Catalog Number
Screw	NO	**M22-K10**
	NO, early-make	**M22-K10P**
	NC	**M22-K01**
	NC, late-break	**M22-K01D**
Spring-cage	NO	**M22-CK10**
	NC	**M22-CK01**
	NC, late-break	**M22-CK01D**
	2NO	**M22-CK20**
	2NC	**M22-CK02**
	NO-NC	**M22-CK11**
	NC	**M22-FK01** ⑦
	NO	**M22-FK10** ⑦

Notes

① For complete listing of available button lenses, light units and contact blocks, see Accessories, **Pages V7-T1-105** to **V7-T1-110**.
② Minimum order quantity of (10).
③ When ordering, specify inscription per catalog number suffix from the Symbols Library (see **Pages V7-T1-123** to **V7-T1-130**) into the Order Notes.
For example, M22-XDH-S-ETCH; Order Notes: Mark with symbol X91, Line item #_.
④ Includes contact block mounting adapter.
⑤ Please see color input key on **Page V7-T1-108**.
⑥ All NC contact blocks are positively driven contact. ⊖
⑦ Additional contacts may not be stacked behind M22-F type contact blocks, M22-F can be stacked behind standard M22 contacts only.

1

Illuminated Pushbuttons, Extended, Maintained ①

M22-DRLH-W

M22S-DRLH-W

M22M-DRLH-W

Operators Only ②

Button Color	Silver Bezel Catalog Number	Black Bezel Catalog Number	Metal Bezel Catalog Number
Red	**M22-DRLH-R**	**M22S-DRLH-R**	**M22M-DRLH-R**
Green	**M22-DRLH-G**	**M22S-DRLH-G**	**M22M-DRLH-G**
White	**M22-DRLH-W**	**M22S-DRLH-W**	**M22M-DRLH-W**
Blue	**M22-DRLH-B**	**M22S-DRLH-B**	**M22M-DRLH-B**
Yellow	**M22-DRLH-Y**	**M22S-DRLH-Y**	**M22M-DRLH-Y**
Amber	**M22-DRLH-A**	**M22S-DRLH-A**	**M22M-DRLH-A**

Notes

① Maintained pushbuttons can be converted in the field to momentary operation by switching the locking ring, which is accessible through the side of the operator body.

② Includes contact block mounting adapter.

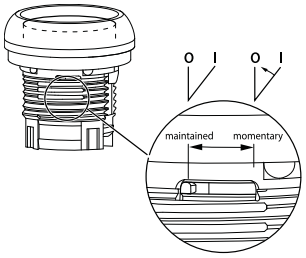

Note: This pilot device features a selectable function switch that enables the device to be set to either maintained or momentary operation.

Illuminated Pushbuttons, Extended, Maintained ①

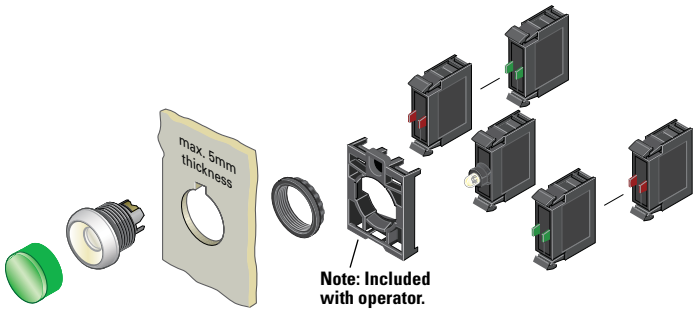

Components

M22-XDLH-W

Button Lenses ②

Color	Inscription	Catalog Number
Red	—	**M22-XDLH-R** ③
	Custom	**M22-XDLH-R-ETCH** ④
	STOP	**M22-XDLH-R-GB0**
	OFF	**M22-XDLH-R-GB5**
	◎	**M22-XDLH-R-X0**
Green	—	**M22-XDLH-G** ③
	Custom	**M22-XDLH-G-ETCH** ④
	START	**M22-XDLH-G-GB1**
	ON	**M22-XDLH-G-GB6**
	ⓘ	**M22-XDLH-G-X1**
Blue	—	**M22-XDLH-B** ③
	Custom	**M22-XDLH-B-ETCH** ④
	RESET	**M22-XDLH-B-GB14**
	Ⓡ	**M22-XDLH-B-X6**
White	—	**M22-XDLH-W** ③
	Custom	**M22-XDLH-W-ETCH** ④
Yellow	—	**M22-XDLH-Y** ③
	Custom	**M22-XDLH-Y-ETCH** ④
Amber	—	**M22-XDLH-A**
	Custom	**M22-XDLH-A-ETCH**

M22-DRL-X

M22S-DRL-X

M22M-DRL-X

Buttonless Operator

Silver Bezel Catalog Number ⑤	Black Bezel Catalog Number ⑤	Metal Bezel Catalog Number ⑤
M22-DRL-X	**M22S-DRL-X**	**M22M-DRL-X**

M22-LED-W

M22-FLED-_

Light Units ②

Terminal Type	LED Color	Light Unit Voltage	Catalog Number
Screw	White	12–30 Vac/Vdc	**M22-LED-W**
	Red		**M22-LED-R**
	Green		**M22-LED-G**
	Blue		**M22-LED-B**
Screw	White	85–264 Vac	**M22-LED230-W**
	Red		**M22-LED230-R**
	Green		**M22-LED230-G**
	Blue		**M22-LED230-B**
Spring-cage	White	12–30 Vac/Vdc	**M22-FLED-W**
	Red		**M22-FLED-R**
	Green		**M22-FLED-G**
	Blue		**M22-FLED-B**
	Red/Green/ Yellow	24 Vdc	**M22-FLED-RG** ⑥
	Red, Green, Blue, Yellow, White, Violet, Turquoise		**M22-FLED-RGB** ⑥

M22-K10

M22-FK01

Contact Blocks ②

Terminal Type	Contact Configuration ⑦	Catalog Number
Screw	NO	**M22-K10**
	NO, early-make	**M22-K10P**
	NC	**M22-K01**
	NC, late-break	**M22-K01D**
Spring-cage	NO	**M22-CK10**
	NC	**M22-CK01**
	NC, late-break	**M22-CK01D**
	2NO	**M22-CK20**
	2NC	**M22-CK02**
	NO-NC	**M22-CK11**
	NC	**M22-FK01** ⑧
	NO	**M22-FK10** ⑧

Notes

① Maintained pushbuttons can be converted in the field to momentary operation by switching the locking ring, which is accessible through the side of the operator body.

② For complete listing of available button lenses, light units and contact blocks, see Accessories, **Pages V7-T1-105** to **V7-T1-110**.

③ Minimum order quantity of (10).

④ When ordering, specify inscription per catalog number suffix from the Symbols Library (see **Pages V7-T1-123** to **V7-T1-130**) into the Order Notes.
For example, M22-XDLH-S-ETCH; Order Notes: Mark with symbol X91, Line item #_.

⑤ Includes contact block mounting adapter.

⑥ Please see color input key on **Page V7-T1-108**.

⑦ All NC contact blocks are positively driven contact. ⊖

⑧ Additional contacts may not be stacked behind M22-F type contact blocks, M22-F can be stacked behind standard M22 contacts only.

1

Indicating Lights

Product Description

Eaton's M22 indicating lights use the combination of a durable, bright LED unit and modern lenses designed specifically for this type of LED to create a bright and visible indicating light.

As with the pushbuttons, the indicating light lenses can be laser engraved. Indicating lights can be ordered as complete devices, including lens and LED unit, or as modular components.

Features

- Customizable laser engraving on all lenses
- LED offering only for improved brightness quality and up to 100,000 hours of operation
- Lenses designed specifically for LED illumination
- Modular construction makes assembly fast and simplifies stocking of components and complete devices
- Capable of communicating via ASi protocol with ASi adapter modules

Protection Type

- IP67, IP69K
- NEMA 4X, 13

Catalog Number Selection

Catalog Number Selection is for illustrative purposes only and not to be used to create new catalog numbers.

Indicating Lights

M22 - L – B – GB8 – B

Operator Type	Lens Color	Plate Inscription	Light Units	
M22-L = Flush indicating light	**W** = White **R** = Red **G** = Green **Y** = Yellow **B** = Blue	**ETCH** = Custom ① **GB5** = OFF **GB6** = ON **GB8** = FAULT **GB15** = FORWARD **GB16** = REVERSE	**12–30 Vac/Vdc** **W** = White **R** = Red **G** = Green **B** = Blue	**85–264 Vac** **230W** = White **230R** = Red **230G** = Green **230B** = Blue

Note: Light unit should match color of lens. Use white light unit with yellow lens.

① When ordering, specify inscription per catalog number suffix from the Symbols Library (see **Pages V7-T1-123** to **V7-T1-130**) into the Order Notes. For example, M22-L-B-ETCH; Order Notes: Mark with symbol X91, Line item #_.

Product Selection

Indicating Lights, Flush

M22-L-R-R

Complete Devices

Lens Color	Light Color	Light Unit Voltage	Catalog Number
White	White	12–30 Vac/Vdc	**M22-L-W-W**
Red	Red		**M22-L-R-R**
Green	Green		**M22-L-G-G**
Yellow	White		**M22-L-Y-W**
Blue	Blue		**M22-L-B-B**
Amber	White		**M22-L-A-W**
White	White	85–264 Vac	**M22-L-W-230W**
Red	Red		**M22-L-R-230R**
Green	Green		**M22-L-G-230G**
Yellow	White		**M22-L-Y-230W**
Blue	Blue		**M22-L-B-230B**
Amber	White		**M22-L-A-230W**

Operators Only ①

M22-L-R

Lens Color	Catalog Number
Flat	
White	**M22-L-W**
Red	**M22-L-R**
Green	**M22-L-G**
Yellow	**M22-L-Y**
Blue	**M22-L-B**
Amber	**M22-L-A**

M22-LH-R

Lens Color	Catalog Number
Conical	
White	**M22-LH-W**
Red	**M22-LH-R**
Green	**M22-LH-G**
Yellow	**M22-LH-Y**
Blue	**M22-LH-B**
Amber	**M22-LH-A**

Note

① Includes contact block mounting adapter.

Indicating Lights, Flush

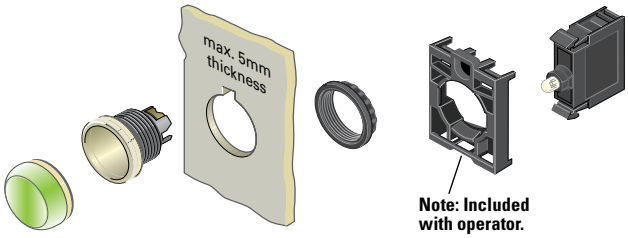

Components

M22-XL-R

Lenses ①

Color	Inscription	Catalog Number
Flat		
Red	—	**M22-XL-R** ②
	Custom	**M22-XL-R-ETCH** ③
	OFF	**M22-XL-R-GB5**
Green	—	**M22-XL-G** ②
	Custom	**M22-XL-G-ETCH** ③
	ON	**M22-XL-G-GB6**
	REVERSE	**M22-XL-G-GB16**
Blue	—	**M22-XL-B** ②
	Custom	**M22-XL-B-ETCH** ③
	FAULT	**M22-XL-B-GB8**
White	—	**M22-XL-W** ②
	Custom	**M22-XL-W-ETCH** ③
	OFF	**M22-XL-W-GB5**
	ON	**M22-XL-W-GB6**
	FAULT	**M22-XL-W-GB8**
	FORWARD	**M22-XL-W-GB15**
Yellow	—	**M22-XL-Y** ②
	Custom	**M22-XL-Y-ETCH** ③
Amber	—	**M22-XL-A** ②
	Custom	**M22-XL-A-ETCH** ③
Conical		
Red	—	**M22-XLH-R**
Green	—	**M22-XLH-G**
Blue	—	**M22-XLH-B**
White	—	**M22-XLH-W**
Yellow	—	**M22-XLH-Y**
Amber	—	**M22-XLH-A**

M22-LED-W

M22-FLED-_

Light Units ①④

Terminal Type	LED Color	Light Unit Voltage	Catalog Number
Screw	White	12–30 Vac/Vdc	**M22-LED-W**
	Red		**M22-LED-R**
	Green		**M22-LED-G**
	Blue		**M22-LED-B**
Screw	White	85–264 Vac	**M22-LED230-W**
	Red		**M22-LED230-R**
	Green		**M22-LED230-G**
	Blue		**M22-LED230-B**
Spring-cage	White	12–30 Vac/Vdc	**M22-FLED-W**
	Red		**M22-FLED-R**
	Green		**M22-FLED-G**
	Blue		**M22-FLED-B**
	Red/Green/Yellow	24 Vdc	**M22-FLED-RG** ⑤
	Red, Green, Blue, Yellow, White, Violet, Turquoise		**M22-FLED-RGB** ⑤

Notes

① For complete listing of available lenses and light units, see Accessories, **Pages V7-T1-105** to **V7-T1-110**.

② Minimum order quantity of (10).

③ When ordering, specify inscription per catalog number suffix from the Symbols Library (see **Pages V7-T1-123** to **V7-T1-130**) into the Order Notes. For example, M22-XL-R-ETCH; Order Notes: Mark with symbol X91, Line item #_.

④ Select the same color LED element as lens color; for yellow and amber lenses, choose a white LED.

⑤ Please see color input key on **Page V7-T1-108**.

M22-L-X

Lensless Indicating Light

Catalog Number
M22-L-X

1

Emergency Stops

Product Description

Eaton's M22 emergency stops are a durable and reliable solution to a variety of e-stop applications. With standard push-pull, as well as twist-to-release and key-release, illuminated options and red or black operators, the M22 e-stop is a robust solution. As with all operators, they can be ordered as a ready to install complete device or as modular components for the perfect fit.

Features

- Push-pull and twist to release options available as well as illuminated and keyed release
- LED offering only for improved brightness quality and up to 100,000 hours of operation
- More than 100,000 mechanical operations
- Capable of communicating via ASi protocol with ASi adapter modules
- Suitable for use in safety applications up to Category-4 or Sil-3

Protection Type

- IP67, IP69K (IP66 key-release)
- NEMA 4X, 13

Catalog Number Selection

Catalog Number Selection is for illustrative purposes only and not to be used to create new catalog numbers.

Emergency Stops

M22 – PVT – MS2 – K10 – 230R

Operator Color	
M22	= Silver
M22S	= Black

Operator Type	
PV	= Non-illuminated push-pull emergency stop
PV45P	= Non-illuminated 45 mm emergency stop
PV60P	= Non-illuminated 60 mm emergency stop
PV45P-MPI	= Non-illuminated mechanical indication, 45 mm
PV60P-MPI	= Non-illuminated mechanical indication, 60 mm
PVT	= Non-illuminated twist-to-release emergency stop
PVT45P	= Non-illuminated twist-to-release 45 mm emergency stop
PVT60P	= Non-illuminated twist-to-release 60 mm emergency stop
PVT45P-MPI	= Non-illuminated twist-to-release with mechanical indication, 45 mm
PVT60P-MPI	= Non-illuminated twist-to-release with mechanical indication, 60 mm
PVS	= Non-illuminated keyed release (red operator only)
PVS45P	= Non-illuminated keyed release 45 mm (red only)
PVS60P	= Non-illuminated keyed release 60 mm (red only)
PVL	= Illuminated push-pull emergency stop
PVLT	= Illuminated twist-to-release emergency stop
PVLT45P	= Illuminated twist-to-release 45 mm emergency stop
PVLT60P	= Illuminated twist-to-release 60 mm emergency stop

Key Release Code	
Blank	= MS1
MS2	= MS2
MS3	= MS3
MS4	= MS4
MS5	= MS5
MS6	= MS6
MS7	= MS7
MS8	= MS8
RS	= Ronis (45 and 60 mm only)

Contact Blocks	
K10	= NO
K10P	= NO, early-make
K01	= NC
K01D	= NC, late-break
CK10	= NO
CK01	= NC
CK01D	= NC, late-break
Ck20	= 2NO
CK02	= 2NC
CK11	= NO-NC

Light Units	
12–30 Vac/Vdc	
W	= White
R	= Red
G	= Green
B	= Blue
85–264 Vac	
230W	= White
230R	= Red
230G	= Green
230B	= Blue

Product Selection

Non-Illuminated and Illuminated Emergency Stops

M22-PV-K01

M22-PVL-K01-R

Complete Devices

Type	Button Color	LED Color	Contact Block Configuration ①	Light Unit Voltage	Catalog Number
Non-Illuminated					
Push-pull	Red	—	NC	—	**M22-PV-K01**
			2NC		**M22-PV-K02**
			1NO-2NC		**M22-PV-K12**
Twist-to-release	Red	—	NC	—	**M22-PVT-K01**
			2NC		**M22-PVT-K02**
			1NO-2NC		**M22-PVT-K12**
Key release	Red	—	NC	—	**M22-PVS-K01**
			2NC		**M22-PVS-K02**
			1NO-2NC		**M22-PVS-K12**
Illuminated					
Push-pull	Red	Red	NC	12–30 Vac/Vdc	**M22-PVL-K01-R**
			2NC		**M22-PVL-K02-R**
			1NO-2NC		**M22-PVL-K12-R**
			NC	85–264 Vac	**M22-PVL-K01-230R**
			2NC		**M22-PVL-K02-230R**
			1NO-2NC		**M22-PVL-K12-230R**
Twist-to-release	Red	Red	NC	12–30 Vac/Vdc	**M22-PVLT-K01-R**
			2NC		**M22-PVLT-K02-R**
			1NO-2NC		**M22-PVLT-K12-R**
			NC	85–264 Vac	**M22-PVLT-K01-230R**
			2NC		**M22-PVLT-K02-230R**
			1NO-2NC		**M22-PVLT-K12-230R**

Note

① All NC contact blocks are positively driven contact. ⊖

1

Non-Illuminated and Illuminated Emergency Stops

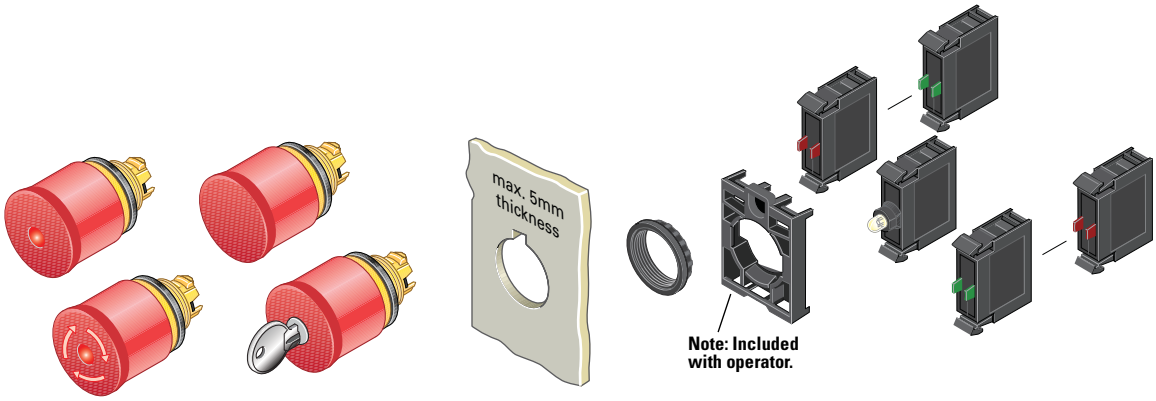

Components

M22-PVL

Push-Pull Emergency Stops

Illumination/Indication	Actuator Size	Catalog Number
None	35 mm	**M22-PV**
	45 mm	**M22-PV45P**
	60 mm	**M22-PV60P**
LED illumination	35 mm	**M22-PVL**
	45 mm	**M22-PVL45P**
	60 mm	**M22-PVL60P**
Mechanical indication	45 mm	**M22-PV45P-MPI**
	60 mm	**M22-PV60P-MPI**

M22-PVT45P-MPI

Twist-to-Release Emergency Stops

Illumination/Indication	Actuator Size	Catalog Number
None	35 mm	**M22-PVT**
	45 mm	**M22-PVT45P**
	60 mm	**M22-PVT60P**
LED illumination	35 mm	**M22-PVLT**
	45 mm	**M22-PVLT45P**
	60 mm	**M22-PVLT60P**
Mechanical indication	45 mm	**M22-PVT45P-MPI**
	60 mm	**M22-PVT60P-MPI**

M22S-PVLT

Machine Stop Operators (Black) ①

Illumination	Type	Actuator Size	Catalog Number
Non-illuminated	Push-pull	35 mm	**M22S-PV**
	Twist-to-release	35 mm	**M22S-PVT**
LED illumination	Push-pull	35 mm	**M22S-PVL**
	Twist-to-release	35 mm	**M22S-PVLT**

M22-PVS60P-MS1

Key Release Emergency Stops ②

Actuator Size	Key Code	Catalog Number
35 mm	MS1	**M22-PVS** ③
	MS2	**M22-PVS-MS2**
	MS3	**M22-PVS-MS3**
	MS4	**M22-PVS-MS4**
	MS5	**M22-PVS-MS5**
	MS6	**M22-PVS-MS6**
	MS7	**M22-PVS-MS7**
	MS8	**M22-PVS-MS8**
45 mm	MS1	**M22-PVS45P**
	MS2	**M22-PVS45P-MS2**
	MS3	**M22-PVS45P-MS3**
	MS4	**M22-PVS45P-MS4**
	MS5	**M22-PVS45P-MS5**
	MS6	**M22-PVS45P-MS6**
	MS7	**M22-PVS45P-MS7**
	MS8	**M22-PVS45P-MS8**
	Ronis	**M22-PVS45P-RS**
60 mm	MS1	**M22-PVS60P**
	MS2	**M22-PVS60P-MS2**
	MS3	**M22-PVS60P-MS3**
	MS4	**M22-PVS60P-MS4**
	MS5	**M22-PVS60P-MS5**
	MS6	**M22-PVS60P-MS6**
	MS7	**M22-PVS60P-MS7**
	MS8	**M22-PVS60P-MS8**
	Ronis	**M22-PVS60P-RS**

Notes

① Includes contact block mounting adapter.
② Key included. For identical locks and keys, use the same key code. One key is included with actuator; additional keys are available as accessories.
③ Includes Key Code MS1.

Maximum number of contacts: four M22-(C)K01,…10, or two M22-(C)K02,…20, …11.
Refer to IL or technical data sheet for more information.

Contact Blocks ①

M22-K10

M22-K01SMC10

FK01SMC10

M22-FK01

Terminal Type	Mounting Location ②	Contact Configuration ③	Catalog Number
Screw	Front	NO	**M22-K10**
		NO, early-make	**M22-K10P**
		NC	**M22-K01**
		NC, late-break	**M22-K01D**
		NC ④	**M22-K01PV6**
		SMCB, NC	**M22-K01SMC10**
		SMCB, 2NC	**M22-K02SMC10**
	Base	SMCB, NC	**M22-KC01SMC10**
		SMCB, 2NC	**M22-KC02SMC10**
Self-monitoring (1NC and 1NO in series)	Front	1NC	**M22-K01SMC10**
		2NC	**M22-K02SMC10**
	Base	1NC	**M22-KC01SMC10**
		2NC	**M22-KC02SMC10**
Self-monitoring spring-cage		NC	**M22-FK01SMC10**
		3NC	**M22-AFK03SMC10**
Spring-cage	Front	NO	**M22-CK10**
		NC	**M22-CK01**
		NC, late-break	**M22-CK01D**
		2NO	**M22-CK20**
		2NC	**M22-CK02**
		NO-NC	**M22-CK11**
		NC	**M22-FK01** ⑤
		NO	**M22-FK10** ⑤

Light Units ①

M22-LED-W

M22-FLED-_

Terminal Type	LED Color	Light Unit Voltage	Catalog Number
Screw	White	12–30 Vac/Vdc	**M22-LED-W**
	Red	12–30 Vac/Vdc	**M22-LED-R**
Screw	White	85–264 Vac	**M22-LED230-W**
	Red	85–264 Vac	**M22-LED230-R**
Screw	White	207–264 Vac	**M22-LED230H-W**
	Red	207–264 Vac	**M22-LED230H-R**
Spring-cage	White	12–30 Vac/Vdc	**M22-FLED-W**
	Red	12–30 Vac/Vdc	**M22-FLED-R**

Extra Keys ⑥

M22-ES-MS1

For Key Code	Catalog Number
MS1	**M22-ES-MS1**
MS2	**M22-ES-MS2**
MS3	**M22-ES-MS3**
MS4	**M22-ES-MS4**
MS5	**M22-ES-MS5**
MS6	**M22-ES-MS6**
MS7	**M22-ES-MS7**
MS8	**M22-ES-MS8**

Accessories

Description	Voltage	Catalog Number
M22-XGPV Yellow guard ring	—	**M22-XGPV**
M22G-XGPV Gray guard ring	—	**M22G-XGPV**
M22-MGTA Rectangular guard	—	**M22-MGTA**
M22-PL-PV Sealing shroud	—	**M22-PL-PV**
M22-XPV60-Y-120 Illuminated ring	24 Vac/Vdc	**M22-XPV60-Y-24**
	120 Vac	**M22-XPV60-Y-120**
	230 Vac	**M22-XPV60-Y-230**

Notes

① For complete listing of available contact blocks, see Accessories, **Pages V7-T1-105** to **V7-T1-110**.

② Self-monitoring contact blocks (SMCB type) cannot be used with illuminated emergency stops.

③ All NC contact blocks are positively driven contact. ⊖

④ Allows up to six contact blocks to be utilized, For use only with only M22-PV_.

⑤ Additional contacts may not be stacked behind M22-F type contact blocks, M22-F can be stacked behind standard M22 contacts only.

⑥ For use with key release operators only. One key included with operator.

Maximum number of contacts: four M22-(C)K01,…10, or two M22-(C)K02,…20, …11. Refer to IL or technical data sheet for more information.

Selector Switches

Contents

Description	*Page*
Selector Switches	
Non-Illuminated Switches	**V7-T1-73**
Illuminated Switches	**V7-T1-78**
Key Operated	**V7-T1-82**

Selector Switches

Product Description

Eaton's M22 selector switch line offers an almost endless variety of options in maintained/momentary, key-removal and illuminated devices. The coding adapters used for maintained/momentary and key removal positions make the M22 stand out from competitive devices. By simply adding or removing a coding adapter from inside the operator, the end-user can change the function of the button. Operator options include standard knob, rotary head, illuminated and keyed versions. As with all operators, they can be ordered as a ready to install complete device or as modular components to meet application specific requirements.

Features

- Adding or removing coding adapters allows for field convertibility of maintained/momentary and key removal positions
- LED offering only for improved brightness quality and up to 100,000 hours of operation
- More than 100,000 mechanical operations
- Coding adapter options make assembly fast and simplify stocking of different configurations of selector switches
- Capable of communicating via ASi protocol with ASi adapter modules

Protection Type

- IP66
- NEMA 4X, 13

Catalog Number Selection

Catalog Number Selection is for illustrative purposes only and not to be used to create new catalog numbers.

Non-Illuminated Selector Switches

M22 – WRK _ – X91 – K10

Bezel
- **M22** = Silver
- **M22S** = Black
- **M22M** = Metal

Handle Type ①
- **W** = Momentary rotary
- **WK** = Momentary knob
- **WKV** = Maintained V-position knob
- **WR** = Maintained rotary
- **WRK** = Maintained knob

① All momentary selector switches can be converted in the field to maintained operation with the removal of a color-coded adapter.

Number of Positions
- **Blank** = Two-position
- **3** = Three-position
- **4** = Four-position

Inscription ②
- **X91** = AUTO-HAND
- **X92** = II-I

② Rotary type only.

Contact Blocks
- **K10** = NO
- **K10P** = NO, early-make

Options
- **K11** = NO-NC
- **K22** = 2NO-2NC
- **K20** = 2NO
- **K02** = 2NC

1

Product Selection

Non-Illuminated Selector Switches

M22-WKV-K10

M22M-WKV-K10

Complete Devices, Knob Type ①

Type	Switching Position	Contact Block Configuration ②	Silver Bezel Catalog Number	Black Bezel Catalog Number	Metal Bezel Catalog Number
Two-position	Maintained	NO	**M22-WRK-K10**	**M22S-WRK-K10**	**M22M-WRK-K10**
		1NO-1NC	**M22-WRK-K11**	**M22S-WRK-K11**	**M22M-WRK-K11**
		2NO-2NC	**M22-WRK-K22**	**M22S-WRK-K22**	**M22M-WRK-K22**
	Maintained V	NO	**M22-WKV-K10**	**M22S-WKV-K10**	**M22M-WKV-K10**
		1NO-1NC	**M22-WKV-K11**	**M22S-WKV-K11**	**M22M-WKV-K11**
		2NO-2NC	**M22-WKV-K22**	**M22S-WKV-K22**	**M22M-WKV-K22**
Three-position	Maintained	2NO	**M22-WRK3-K20**	**M22S-WRK3-K20**	**M22M-WRK3-K20**
	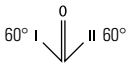	2NO-2NC	**M22-WRK3-K22**	**M22S-WRK3-K22**	**M22M-WRK3-K22**

Notes

① Includes contact block mounting adapter.

② All NC contact blocks are positively driven contact. ⊖

Non-Illuminated Selector Switches

Components

M22-WK

M22M-WK

Operators Only, Knob Type ①

Type	Switching Position	Silver Bezel Catalog Number	Black Bezel Catalog Number	Metal Bezel Catalog Number
Two-position	Momentary ②	**M22-WK**	**M22S-WK**	**M22M-WK**
	Maintained	**M22-WRK**	**M22S-WRK**	**M22M-WRK**
	Maintained V	**M22-WKV**	**M22S-WKV**	**M22M-WKV**
Three-position	Momentary ② 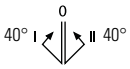	**M22-WK3**	**M22S-WK3**	**M22M-WK3**
	Maintained 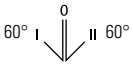	**M22-WRK3**	**M22S-WRK3**	**M22M-WRK3**
	Maintained, return from left	**M22-WRK3-2**	**M22S-WRK3-2**	**M22M-WRK3-2**
	Maintained, return from right	**M22-WRK3-1**	**M22S-WRK3-1**	**M22M-WRK3-1**
Four-position	Maintained 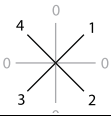	**M22-WRK4**	**M22S-WRK4**	**M22M-WRK4**

Notes

① Includes contact block mounting adapter.

② Momentary selector switches can be converted in the field to maintained operation with the removal of a color coded adapter. See **Page V7-T1-112**.

1

Non-Illuminated Selector Switches

Components

M22S-WR3-X94

Operators Only, Rotary Type ①

Type	Switching Position	Inscription	Silver Bezel Catalog Number	Black Bezel Catalog Number	Metal Bezel Catalog Number
Two-position	Momentary ②	I-O	**M22-W**	**M22S-W**	**M22M-W**
	Maintained	I-O	**M22-WR**	**M22S-WR**	**M22M-WR**
		Custom	**M22-WR-ETCH** ③	**M22S-WR-ETCH** ③	**M22M-WR-ETCH** ③
		AUTO-HAND	**M22-WR-X91**	**M22S-WR-X91**	**M22M-WR-X91**
		II-I	**M22-WR-X92**	**M22S-WR-X92**	**M22M-WR-X92**
Three-position	Momentary ② 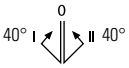	I-O-II	**M22-W3**	**M22S-W3**	**M22M-W3**
	Maintained 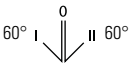	I-O-II	**M22-WR3**	**M22S-WR3**	**M22M-WR3**
		Custom	**M22-WR3-ETCH** ③	**M22S-WR3-ETCH** ③	**M22M-WR3-ETCH** ③
		AUTO-O-MAN	**M22-WR3-X94**	**M22S-WR3-X94**	**M22M-WR3-X94**
Four-position	Maintained	0-1-0-2-0-3-0-4	**M22-WR4**	**M22S-WR4**	**M22M-WR4**

Notes

① Includes contact block mounting adapter.

② Momentary selector switches can be converted in the field to maintained operation with the removal of a color coded adapter. See **Page V7-T1-112**.

③ When ordering, specify inscription per catalog number suffix from the Symbols Library (see **Pages V7-T1-123** to **V7-T1-130**) into the Order Notes. For example, M22-WR3-ETCH; Order Notes: Mark with symbol X88, Line item #_.

Non-Illuminated Selector Switches

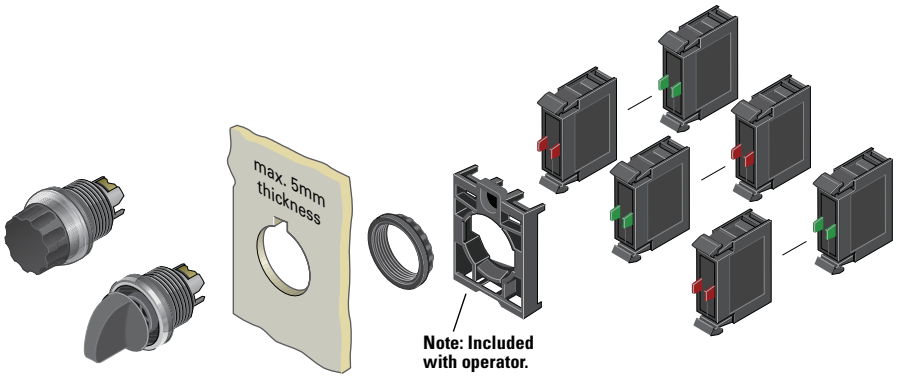

Components

M22-K10

M22-FK01

Contact Blocks ①

Terminal Type	Contact Configuration ②	Catalog Number
Screw	NO	**M22-K10**
	NO, early-make	**M22-K10P**
	NC	**M22-K01**
	NC, late-break	**M22-K01D**
Spring-cage	NO	**M22-CK10**
	NC	**M22-CK01**
	NC, late-break	**M22-CK01D**
	2NO	**M22-CK20**
	2NC	**M22-CK02**
	NO-NC	**M22-CK11**
	NC	**M22-FK01** ③
	NO	**M22-FK10** ③

Accessories

	Description	Catalog Number
M22-XW	Plunger bridge ④	**M22-XW**
M22-XWS	Key cover	**M22-XWS**
M22-XC-R	Key withdraw adapter ⑤	**M22-XC-R**
M22-XC-Y	Coding adapter	**M22-XC-Y**
M22-XGWK	Guard ring	**M22-XGWK**

Notes

① For complete listing of available contact blocks, see Accessories, **Pages V7-T1-105** to **V7-T1-110**.

② All NC contact blocks are positively driven contact. ⊖

③ Additional contacts may not be stacked behind M22-F type contact blocks, M22-F can be stacked behind standard M22 contacts only.

④ Plunger needed to actuate center-mounted contact blocks. Used for non-illuminated three-position selector switches only.

⑤ Enables a keyed selector switch to be set to user-selected key withdraw position.

1

Catalog Number Selection

Catalog Number Selection is for illustrative purposes only and not to be used to create new catalog numbers.

Illuminated Selector Switches

M22 – WLK – R – K10 – R

Bezel

M22 = Silver
M22S = Black
M22M = Metal

Handle Type

WLK = Illuminated knob type momentary, two-position
WLKV = Illuminated Knob type momentary, V-position
WLK3 = Illuminated knob type momentary, three-position

Handle Color

W = White
R = Red
G = Green
Y = Yellow
B = Blue

Contact Blocks

K10 = 1NO
K01 = 1NC
K20 = 2NO
K02 = 2NC
K11 = 1NO-1NC
K30 = 3NO
K03 = 3NC
K21 = 2NO-1NC
K12 = 1NO-2NC

Light Units

12–30 Vac/Vdc
W = White
R = Red
G = Green
B = Blue
85–264 Vac
230W = White
230R = Red
230G = Green
230B = Blue

Product Selection

Illuminated Selector Switches

Components

M22-WLK-W

Operators Only, Knob Type ①

Type	Switching Position	Button Color	Silver Bezel Catalog Number	Black Bezel Catalog Number	Metal Bezel Catalog Number
Two-position	Momentary ②	White	**M22-WLK-W**	**M22S-WLK-W**	**M22M-WLK-W**
		Red	**M22-WLK-R**	**M22S-WLK-R**	**M22M-WLK-R**
		Green	**M22-WLK-G**	**M22S-WLK-G**	**M22M-WLK-G**
		Yellow	**M22-WLK-Y**	**M22S-WLK-Y**	**M22M-WLK-Y**
		Blue	**M22-WLK-B**	**M22S-WLK-B**	**M22M-WLK-B**
	Maintained	White	**M22-WRLK-W**	**M22S-WRLK-W**	**M22M-WRLK-W**
		Red	**M22-WRLK-R**	**M22S-WRLK-R**	**M22M-WRLK-R**
		Green	**M22-WRLK-G**	**M22S-WRLK-G**	**M22M-WRLK-G**
		Yellow	**M22-WRLK-Y**	**M22S-WRLK-Y**	**M22M-WRLK-Y**
		Blue	**M22-WRLK-B**	**M22S-WRLK-B**	**M22M-WRLK-B**
	Maintained V	White	**M22-WLKV-W**	**M22S-WLKV-W**	**M22M-WLKV-W**
		Red	**M22-WLKV-R**	**M22S-WLKV-R**	**M22M-WLKV-R**
		Green	**M22-WLKV-G**	**M22S-WLKV-G**	**M22M-WLKV-G**
		Yellow	**M22-WLKV-Y**	**M22S-WLKV-Y**	**M22M-WLKV-Y**
		Blue	**M22-WLKV-B**	**M22S-WLKV-B**	**M22M-WLKV-B**

Notes

① Includes contact block mounting adapter.

② Momentary selector switches can be converted in the field to maintained operation with the removal of a color coded adapter. See **Page V7-T1-112**.

1

Illuminated Selector Switches

Components

M22-WLK3-W

Operators Only, Knob Type ①

Type	Switching Position	Button Color	Silver Bezel Catalog Number	Black Bezel Catalog Number	Metal Bezel Catalog Number
Three-position	Momentary ② 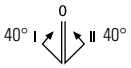	White	**M22-WLK3-W**	**M22S-WLK3-W**	**M22M-WLK3-W**
		Red	**M22-WLK3-R**	**M22S-WLK3-R**	**M22M-WLK3-R**
		Green	**M22-WLK3-G**	**M22S-WLK3-G**	**M22M-WLK3-G**
		Yellow	**M22-WLK3-Y**	**M22S-WLK3-Y**	**M22M-WLK3-Y**
		Blue	**M22-WLK3-B**	**M22S-WLK3-B**	**M22M-WLK3-B**
	Maintained 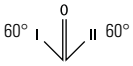	White	**M22-WRLK3-W**	**M22S-WRLK3-W**	**M22M-WRLK3-W**
		Red	**M22-WRLK3-R**	**M22S-WRLK3-R**	**M22M-WRLK3-R**
		Green	**M22-WRLK3-G**	**M22S-WRLK3-G**	**M22M-WRLK3-G**
		Yellow	**M22-WRLK3-Y**	**M22S-WRLK3-Y**	**M22M-WRLK3-Y**
		Blue	**M22-WRLK3-B**	**M22S-WRLK3-B**	**M22M-WRLK3-B**
	Maintained, return from right	White	**M22-WRLK3-1-W**	**M22S-WRLK3-1-W**	**M22M-WRLK3-1-W**
		Red	**M22-WRLK3-1-R**	**M22S-WRLK3-1-R**	**M22M-WRLK3-1-R**
		Green	**M22-WRLK3-1-G**	**M22S-WRLK3-1-G**	**M22M-WRLK3-1-G**
		Yellow	**M22-WRLK3-1-Y**	**M22S-WRLK3-1-Y**	**M22M-WRLK3-1-Y**
		Blue	**M22-WRLK3-1-B**	**M22S-WRLK3-1-B**	**M22M-WRLK3-1-B**
	Maintained, return from left	White	**M22-WRLK3-2-W**	**M22S-WRLK3-2-W**	**M22M-WRLK3-2-W**
		Red	**M22-WRLK3-2-R**	**M22S-WRLK3-2-R**	**M22M-WRLK3-2-R**
		Green	**M22-WRLK3-2-G**	**M22S-WRLK3-2-G**	**M22M-WRLK3-2-G**
		Yellow	**M22-WRLK3-2-Y**	**M22S-WRLK3-2-Y**	**M22M-WRLK3-2-Y**
		Blue	**M22-WRLK3-2-B**	**M22S-WRLK3-2-B**	**M22M-WRLK3-2-B**

Notes

① Includes contact block mounting adapter.

② Momentary selector switches can be converted in the field to maintained operation with the removal of a color coded adapter. See **Page V7-T1-112**.

Illuminated Selector Switches

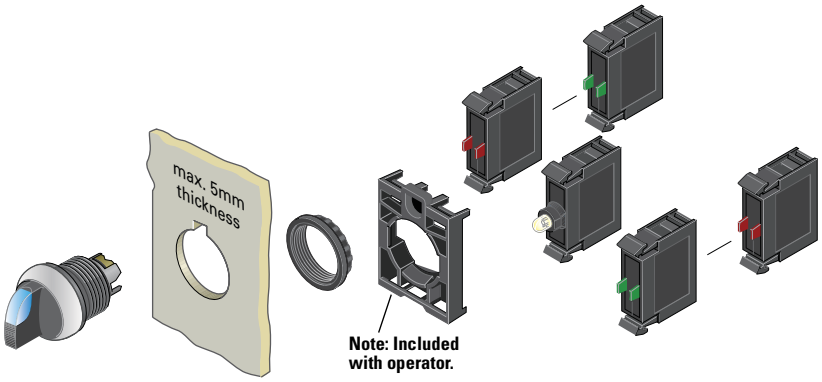

M22-LED-W

M22-FLED-_

Light Units ①

Terminal Type	LED Color ②	Light Unit Voltage	Catalog Number
Screw	White	12–30 Vac/Vdc	**M22-LED-W**
	Red		**M22-LED-R**
	Green		**M22-LED-G**
	Blue		**M22-LED-B**
Screw	White	85–264 Vac	**M22-LED230-W**
	Red		**M22-LED230-R**
	Green		**M22-LED230-G**
	Blue		**M22-LED230-B**
Spring-cage	White	12–30 Vac/Vdc	**M22-FLED-W**
	Red		**M22-FLED-R**
	Green		**M22-FLED-G**
	Blue		**M22-FLED-B**
	Red/Green/ Yellow	24 Vdc	**M22-FLED-RG** ③
	Red, Green, Blue, Yellow, White, Violet, Turquoise		**M22-FLED-RGB** ③

M22-K10

M22-FK01

Contact Blocks ①

Terminal Type	Contact Configuration ④	Catalog Number
Screw	NO	**M22-K10**
	NO, early-make	**M22-K10P**
	NC	**M22-K01**
	NC, late-break	**M22-K01D**
Spring-cage	NO	**M22-CK10**
	NC	**M22-CK01**
	NC, late-break	**M22-CK01D**
	2NO	**M22-CK20**
	2NC	**M22-CK02**
	NO-NC	**M22-CK11**
	NC	**M22-FK01** ⑤
	NO	**M22-FK10** ⑤

Accessories

	Description	Catalog Number
M22-XW	Plunger bridge ⑥	**M22-XW**
M22-XWS	Key cover	**M22-XWS**
M22-XC-R	Key withdraw adapter ⑦	**M22-XC-R**
M22-XC-Y	Coding adapter	**M22-XC-Y**
M22-XGWK	Guard ring	**M22-XGWK**

Notes

① For complete listing of available light units and contact blocks, see Accessories, **Pages V7-T1-105** to **V7-T1-110**.
② Select the same color LED element as lens color; for yellow lens, choose a white LED. Select a white lens if utilizing multi-color LED, M22-FLED-RG or M22-FLED-RGB.
③ Please see color input key on **Page V7-T1-108**.
④ All NC contact blocks are positively driven contact. ⊖
⑤ Additional contacts may not be stacked behind M22-F type contact blocks, M22-F can be stacked behind standard M22 contacts only.
⑥ Plunger needed to actuate center-mounted contact blocks. Used for non-illuminated three-position selector switches only.
⑦ Enables a keyed selector switch to be set to user-selected key withdraw position.

1

Catalog Number Selection

Catalog Number Selection is for illustrative purposes only and not to be used to create new catalog numbers.

Key-Operated Selector Switches

M22 – WS – MS2 – A1

Bezel	Handle Type	Key Code	Key Removal Position
M22 = Silver **M22S** = Black **M22M** = Metal	**WS** = Two-position, momentary **WS3** = Three-position, momentary **WRS** = Two-position, maintained **WRS3** = Three-position, maintained	**Blank** = MS1 **MS2** = MS2 **MS3** = MS3 **MS4** = MS4 **MS5** = MS5 **MS6** = MS6 **MS7** = MS7 **MS8** = MS8	Refer to coding adapter assembly and functional test guide on **Page V7-T1-112**.

Product Selection

Key-Operated Selector Switches ①②

Components

M22-WS

M22S-WRS

Operators Only ③

Type	Switching Position	Key Removal Position	Key Code	Silver Bezel Catalog Number	Black Bezel Catalog Number	Metal Bezel Catalog Number
Two-position	Momentary ④ 40°	Return from right, key removable left	MS1	**M22-WS**	**M22S-WS**	**M22M-WS**
			MS2	**M22-WS-MS2**	**M22S-WS-MS2**	**M22M-WS-MS2**
			MS3	**M22-WS-MS3**	**M22S-WS-MS3**	**M22M-WS-MS3**
			MS4	**M22-WS-MS4**	**M22S-WS-MS4**	**M22M-WS-MS4**
			MS5	**M22-WS-MS5**	**M22S-WS-MS5**	**M22M-WS-MS5**
			MS6	**M22-WS-MS6**	**M22S-WS-MS6**	**M22M-WS-MS6**
			MS7	**M22-WS-MS7**	**M22S-WS-MS7**	**M22M-WS-MS7**
			MS8	**M22-WS-MS8**	**M22S-WS-MS8**	**M22M-WS-MS8**
Two-position	Maintained 40°	Key removable left	MS1	**M22-WRS-A1**	**M22S-WRS-A1**	**M22M-WRS-A1**
			MS2	**M22-WRS-MS2-A1**	**M22S-WRS-MS2-A1**	**M22M-WRS-MS2-A1**
			MS3	**M22-WRS-MS3-A1**	**M22S-WRS-MS3-A1**	**M22M-WRS-MS3-A1**
			MS4	**M22-WRS-MS4-A1**	**M22S-WRS-MS4-A1**	**M22M-WRS-MS4-A1**
			MS5	**M22-WRS-MS5-A1**	**M22S-WRS-MS5-A1**	**M22M-WRS-MS5-A1**
			MS6	**M22-WRS-MS6-A1**	**M22S-WRS-MS6-A1**	**M22M-WRS-MS6-A1**
			MS7	**M22-WRS-MS7-A1**	**M22S-WRS-MS7-A1**	**M22M-WRS-MS7-A1**
			MS8	**M22-WRS-MS8-A1**	**M22S-WRS-MS8-A1**	**M22M-WRS-MS8-A1**
		Key removable left/right	MS1	**M22-WRS**	**M22S-WRS**	**M22M-WRS**
			MS2	**M22-WRS-MS2**	**M22S-WRS-MS2**	**M22M-WRS-MS2**
			MS3	**M22-WRS-MS3**	**M22S-WRS-MS3**	**M22M-WRS-MS3**
			MS4	**M22-WRS-MS4**	**M22S-WRS-MS4**	**M22M-WRS-MS4**
			MS5	**M22-WRS-MS5**	**M22S-WRS-MS5**	**M22M-WRS-MS5**
			MS6	**M22-WRS-MS6**	**M22S-WRS-MS6**	**M22M-WRS-MS6**
			MS7	**M22-WRS-MS7**	**M22S-WRS-MS7**	**M22M-WRS-MS7**
			MS8	**M22-WRS-MS8**	**M22S-WRS-MS8**	**M22M-WRS-MS8**

Notes

① Includes one key.

② Key removal positions can be modified in the field using coding adapters; see chart on **Page V7-T1-112**.

③ Includes contact block mounting adapter.

④ Momentary selector switches can be converted in the field to maintained operation with the removal of a color coded adapter. See **Page V7-T1-112**.

Key-Operated Selector Switches ①②
Components

M22-WS3-X93

M22M-WS3-X93

Operators Only, continued ③

Type	Switching Position	Key Removal Position	Key Code	Silver Bezel Catalog Number	Black Bezel Catalog Number	Metal Bezel Catalog Number
Three-position	Momentary ④ 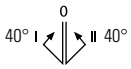	Return from left/right, key removable center	MS1	**M22-WS3**	**M22S-WS3**	**M22M-WS3**
			MS2	**M22-WS3-MS2**	**M22S-WS3-MS2**	**M22M-WS3-MS2**
			MS3	**M22-WS3-MS3**	**M22S-WS3-MS3**	**M22M-WS3-MS3**
			MS4	**M22-WS3-MS4**	**M22S-WS3-MS4**	**M22M-WS3-MS4**
			MS5	**M22-WS3-MS5**	**M22S-WS3-MS5**	**M22M-WS3-MS5**
			MS6	**M22-WS3-MS6**	**M22S-WS3-MS6**	**M22M-WS3-MS6**
			MS7	**M22-WS3-MS7**	**M22S-WS3-MS7**	**M22M-WS3-MS7**
			MS8	**M22-WS3-MS8**	**M22S-WS3-MS8**	**M22M-WS3-MS8**
Three-position	Maintained 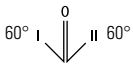	Key removable left/center/right	MS1	**M22-WRS3-A1**	**M22S-WRS3-A1**	**M22M-WRS3-A1**
			MS2	**M22-WRS3-MS2-A1**	**M22S-WRS3-MS2-A1**	**M22M-WRS3-MS2-A1**
			MS3	**M22-WRS3-MS3-A1**	**M22S-WRS3-MS3-A1**	**M22M-WRS3-MS3-A1**
			MS4	**M22-WRS3-MS4-A1**	**M22S-WRS3-MS4-A1**	**M22M-WRS3-MS4-A1**
			MS5	**M22-WRS3-MS5-A1**	**M22S-WRS3-MS5-A1**	**M22M-WRS3-MS5-A1**
			MS6	**M22-WRS3-MS6-A1**	**M22S-WRS3-MS6-A1**	**M22M-WRS3-MS6-A1**
			MS7	**M22-WRS3-MS7-A1**	**M22S-WRS3-MS7-A1**	**M22M-WRS3-MS7-A1**
			MS8	**M22-WRS3-MS8-A1**	**M22S-WRS3-MS8-A1**	**M22M-WRS3-MS8-A1**
		Key removable center/left	MS1	**M22-WRS3-A2**	**M22S-WRS3-A2**	**M22M-WRS3-A2**
			MS2	**M22-WRS3-MS2-A2**	**M22S-WRS3-MS2-A2**	**M22M-WRS3-MS2-A2**
			MS3	**M22-WRS3-MS3-A2**	**M22S-WRS3-MS3-A2**	**M22M-WRS3-MS3-A2**
			MS4	**M22-WRS3-MS4-A2**	**M22S-WRS3-MS4-A2**	**M22M-WRS3-MS4-A2**
			MS5	**M22-WRS3-MS5-A2**	**M22S-WRS3-MS5-A2**	**M22M-WRS3-MS5-A2**
			MS6	**M22-WRS3-MS6-A2**	**M22S-WRS3-MS6-A2**	**M22M-WRS3-MS6-A2**
			MS7	**M22-WRS3-MS7-A2**	**M22S-WRS3-MS7-A2**	**M22M-WRS3-MS7-A2**
			MS8	**M22-WRS3-MS8-A2**	**M22S-WRS3-MS8-A2**	**M22M-WRS3-MS8-A2**
		Key removable center/right	MS1	**M22-WRS3-A3**	**M22S-WRS3-A3**	**M22M-WRS3-A3**
			MS2	**M22-WRS3-MS2-A3**	**M22S-WRS3-MS2-A3**	**M22M-WRS3-MS2-A3**
			MS3	**M22-WRS3-MS3-A3**	**M22S-WRS3-MS3-A3**	**M22M-WRS3-MS3-A3**
			MS4	**M22-WRS3-MS4-A3**	**M22S-WRS3-MS4-A3**	**M22M-WRS3-MS4-A3**
			MS5	**M22-WRS3-MS5-A3**	**M22S-WRS3-MS5-A3**	**M22M-WRS3-MS5-A3**
			MS6	**M22-WRS3-MS6-A3**	**M22S-WRS3-MS6-A3**	**M22M-WRS3-MS6-A3**
			MS7	**M22-WRS3-MS7-A3**	**M22S-WRS3-MS7-A3**	**M22M-WRS3-MS7-A3**
			MS8	**M22-WRS3-MS8-A3**	**M22S-WRS3-MS8-A3**	**M22M-WRS3-MS8-A3**
		Key removable left/right	MS1	**M22-WRS3**	**M22S-WRS3**	**M22M-WRS3**
			MS2	**M22-WRS3-MS2**	**M22S-WRS3-MS2**	**M22M-WRS3-MS2**
			MS3	**M22-WRS3-MS3**	**M22S-WRS3-MS3**	**M22M-WRS3-MS3**
			MS4	**M22-WRS3-MS4**	**M22S-WRS3-MS4**	**M22M-WRS3-MS4**
			MS5	**M22-WRS3-MS5**	**M22S-WRS3-MS5**	**M22M-WRS3-MS5**
			MS6	**M22-WRS3-MS6**	**M22S-WRS3-MS6**	**M22M-WRS3-MS6**
			MS7	**M22-WRS3-MS7**	**M22S-WRS3-MS7**	**M22M-WRS3-MS7**
			MS8	**M22-WRS3-MS8**	**M22S-WRS3-MS8**	**M22M-WRS3-MS8**

Notes

① Includes one key.

② Key removal positions can be modified in the field using coding adapters; see chart on **Page V7-T1-112**.

③ Includes contact block mounting adapter.

④ Momentary selector switches can be converted in the field to maintained operation with the removal of a color coded adapter. See **Page V7-T1-112**.

1

Key-Operated Selector Switches ①②

Components

M22-WS3-X93

M22M-WS3-X93

Operators Only, continued ③

Type	Switching Position	Key Removal Position	Key Code	Silver Bezel Catalog Number	Black Bezel Catalog Number	Metal Bezel Catalog Number
Three-position	Maintained 60° I 0 II 60°	Return from left, key removable center	MS1	**M22-WRS3-A7**	**M22S-WRS3-A7**	**M22M-WRS3-A7**
			MS2	**M22-WRS3-MS2-A7**	**M22S-WRS3-MS2-A7**	**M22M-WRS3-MS2-A7**
			MS3	**M22-WRS3-MS3-A7**	**M22S-WRS3-MS3-A7**	**M22M-WRS3-MS3-A7**
			MS4	**M22-WRS3-MS4-A7**	**M22S-WRS3-MS4-A7**	**M22M-WRS3-MS4-A7**
			MS5	**M22-WRS3-MS5-A7**	**M22S-WRS3-MS5-A7**	**M22M-WRS3-MS5-A7**
			MS6	**M22-WRS3-MS6-A7**	**M22S-WRS3-MS6-A7**	**M22M-WRS3-MS6-A7**
			MS7	**M22-WRS3-MS7-A7**	**M22S-WRS3-MS7-A7**	**M22M-WRS3-MS7-A7**
			MS8	**M22-WRS3-MS8-A7**	**M22S-WRS3-MS8-A7**	**M22M-WRS3-MS8-A7**
		Return from left, key removable center/right	MS1	**M22-WRS3-A6**	**M22S-WRS3-A6**	**M22M-WRS3-A6**
			MS2	**M22-WRS3-MS2-A6**	**M22S-WRS3-MS2-A6**	**M22M-WRS3-MS2-A6**
			MS3	**M22-WRS3-MS3-A6**	**M22S-WRS3-MS3-A6**	**M22M-WRS3-MS3-A6**
			MS4	**M22-WRS3-MS4-A6**	**M22S-WRS3-MS4-A6**	**M22M-WRS3-MS4-A6**
			MS5	**M22-WRS3-MS5-A6**	**M22S-WRS3-MS5-A6**	**M22M-WRS3-MS5-A6**
			MS6	**M22-WRS3-MS6-A6**	**M22S-WRS3-MS6-A6**	**M22M-WRS3-MS6-A6**
			MS7	**M22-WRS3-MS7-A6**	**M22S-WRS3-MS7-A6**	**M22M-WRS3-MS7-A6**
			MS8	**M22-WRS3-MS8-A6**	**M22S-WRS3-MS8-A6**	**M22M-WRS3-MS8-A6**
Three-position	Maintained 60° I 0 II 60°	Return from right, key removable left/center	MS1	**M22-WRS3-A4**	**M22S-WRS3-A4**	**M22M-WRS3-A4**
			MS2	**M22-WRS3-MS2-A4**	**M22S-WRS3-MS2-A4**	**M22M-WRS3-MS2-A4**
			MS3	**M22-WRS3-MS3-A4**	**M22S-WRS3-MS3-A4**	**M22M-WRS3-MS3-A4**
			MS4	**M22-WRS3-MS4-A4**	**M22S-WRS3-MS4-A4**	**M22M-WRS3-MS4-A4**
			MS5	**M22-WRS3-MS5-A4**	**M22S-WRS3-MS5-A4**	**M22M-WRS3-MS5-A4**
			MS6	**M22-WRS3-MS6-A4**	**M22S-WRS3-MS6-A4**	**M22M-WRS3-MS6-A4**
			MS7	**M22-WRS3-MS7-A4**	**M22S-WRS3-MS7-A4**	**M22M-WRS3-MS7-A4**
			MS8	**M22-WRS3-MS8-A4**	**M22S-WRS3-MS8-A4**	**M22M-WRS3-MS8-A4**
		Return from right, key removable center	MS1	**M22-WRS3-A5**	**M22S-WRS3-A5**	**M22M-WRS3-A5**
			MS2	**M22-WRS3-MS2-A5**	**M22S-WRS3-MS2-A5**	**M22M-WRS3-MS2-A5**
			MS3	**M22-WRS3-MS3-A5**	**M22S-WRS3-MS3-A5**	**M22M-WRS3-MS3-A5**
			MS4	**M22-WRS3-MS4-A5**	**M22S-WRS3-MS4-A5**	**M22M-WRS3-MS4-A5**
			MS5	**M22-WRS3-MS5-A5**	**M22S-WRS3-MS5-A5**	**M22M-WRS3-MS5-A5**
			MS6	**M22-WRS3-MS6-A5**	**M22S-WRS3-MS6-A5**	**M22M-WRS3-MS6-A5**
			MS7	**M22-WRS3-MS7-A5**	**M22S-WRS3-MS7-A5**	**M22M-WRS3-MS7-A5**
			MS8	**M22-WRS3-MS8-A5**	**M22S-WRS3-MS8-A5**	**M22M-WRS3-MS8-A5**

Notes

① Includes one key.

② Key removal positions can be modified in the field using coding adapters; see chart on **Page V7-T1-112**.

③ Includes contact block mounting adapter.

Key-Operated Selector Switches

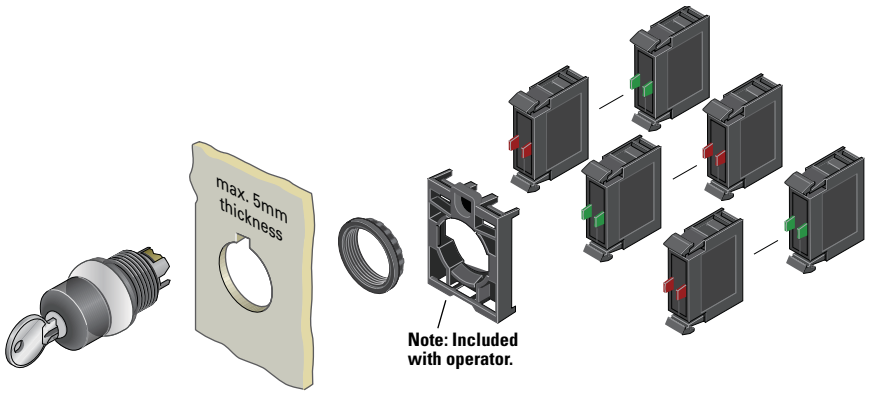

Components

M22-K10

M22-FK01

Contact Blocks ①

Terminal Type	Contact Configuration ②	Catalog Number
Screw	NO	**M22-K10**
	NO, early-make	**M22-K10P**
	NC	**M22-K01**
	NC, late-break	**M22-K01D**
Spring-cage	NO	**M22-CK10**
	NC	**M22-CK01**
	NC, late-break	**M22-CK01D**
	2NO	**M22-CK20**
	2NC	**M22-CK02**
	NO-NC	**M22-CK11**
	NC	**M22-FK01** ③
	NO	**M22-FK10** ③

M22-ES-MS1

Extra Keys

Key Code	Catalog Number
MS1	**M22-ES-MS1**
MS2	**M22-ES-MS2**
MS3	**M22-ES-MS3**
MS4	**M22-ES-MS4**
MS5	**M22-ES-MS5**
MS6	**M22-ES-MS6**
MS7	**M22-ES-MS7**
MS8	**M22-ES-MS8**

Accessories

	Description	Catalog Number
M22-XW	Plunger bridge ④	**M22-XW**
M22-XWS	Key cover	**M22-XWS**
M22-XC-R	Key withdraw adapter ⑤	**M22-XC-R**
M22-XC-Y	Coding adapter	**M22-XC-Y**
M22-XGWK	Guard ring	**M22-XGWK**

Notes

① For complete listing of available contact blocks, see Accessories, **Pages V7-T1-105** to **V7-T1-110**.

② All NC contact blocks are positively driven contact. ⊖

③ Additional contacts may not be stacked behind M22-F type contact blocks, M22-F can be stacked behind standard M22 contacts only.

④ Plunger needed to actuate center-mounted contact blocks. Used for non-illuminated three-position selector switches only.

⑤ Enables a keyed selector switch to be set to user-selected key withdraw position.

1

Mushroom Head Pushbuttons

Product Description

Eaton's M22 mushroom head operators are a durable and unique way to include standard pushbutton functionality. Like the standard pushbutton line, the maintained pushbuttons are field convertible to momentary. They also offer laser engraving and a robust five million mechanical operations on the standard momentary operator. As with all operators, they can be ordered as a ready to install complete device or as modular components.

Features

- Field convertible from maintained to momentary (available on maintained pushbuttons only)
- Customizable laser engraving on all buttons
- More than five million mechanical operations on momentary and one million on maintained pushbuttons
- Modular construction makes assembly fast and simplifies stocking of components and complete devices
- Capable of communicating via ASi protocol with ASi adapter modules

Protection Type

- IP67, IP69K
- NEMA 4X, 13

Catalog Number Selection

Catalog Number Selection is for illustrative purposes only and not to be used to create new catalog numbers.

Mushroom Head Pushbuttons

M22 – DP – R – GB4 – K01

Bezel

M22 = Silver
M22S = Black
M22M = Metal

Operator Type

DP = Non-illuminated momentary mushroom head pushbutton
DRP = Non-illuminated maintained mushroom head pushbutton

Operator Color

R = Red
S = Black
G = Green
Y = Yellow

Plate Inscription

ETCH =	Custom ①	**X0** =	◎
GB0 =	STOP	**X1** =	ⓘ
GB1 =	START	**X4** =	⊕
GB3 =	UP	**X5** =	⊖
GB4 =	DOWN	**X6** =	Ⓡ
GB5 =	OFF	**X7** =	ⓘ
GB6 =	ON		
GB15 =	FORWARD		
GB16 =	REVERSE		

① When ordering, specify inscription per catalog number suffix from the Symbols Library (see **Pages V7-T1-123** to **V7-T1-130**) into the Order Notes. For example, M22-DP-R-ETCH; Order Notes: Mark with symbol X91, Line item #_.

Contact Blocks

K01 = NC
K10 = NO
K11 = NO-NC
K12 = 1NO-2NC

1

Product Selection

Mushroom Head Pushbuttons, Momentary ①

M22-DP-R-K01

M22S-DP-R-K01

M22M-DP-R-K01

Complete Devices

Button Color	Contact Block Configuration ②	Silver Bezel Catalog Number	Black Bezel Catalog Number	Metal Bezel Catalog Number
Red	NC	**M22-DP-R-K01**	**M22S-DP-R-K01**	**M22M-DP-R-K01**
	2NC	**M22-DP-R-K02**	**M22S-DP-R-K02**	**M22M-DP-R-K02**
	1NO-2NC	**M22-DP-R-K12**	**M22S-DP-R-K12**	**M22M-DP-R-K12**
	1NO-1NC	**M22-DP-R-K11**	**M22S-DP-R-K11**	**M22M-DP-R-K11**

M22-DP-G

M22S-DP-G

M22M-DP-G

Operators Only ②

Button Color	Silver Bezel Catalog Number	Black Bezel Catalog Number	Metal Bezel Catalog Number
Black	**M22-DP-S**	**M22S-DP-S**	**M22M-DP-S**
Red	**M22-DP-R**	**M22S-DP-R**	**M22M-DP-R**
Green	**M22-DP-G**	**M22S-DP-G**	**M22M-DP-G**
Yellow	**M22-DP-Y**	**M22S-DP-Y**	**M22M-DP-Y**

Notes

① 35 mm diameter mushroom head button.

② Includes contact block mounting adapter.

Non-Illuminated Mushroom Head Pushbuttons, Momentary ①

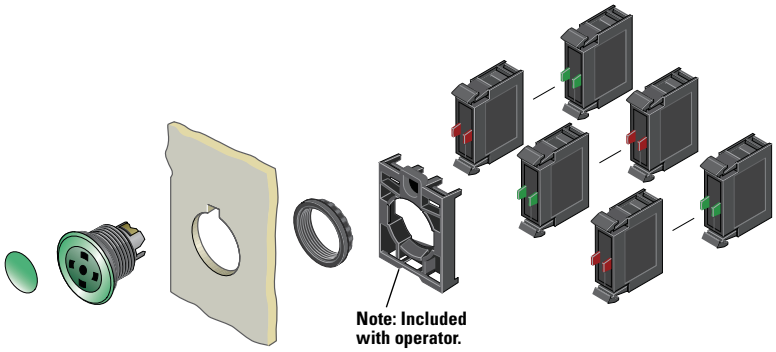

Components

M22-XDP-G

Mushroom Head Plates

Color	Inscription	Catalog Number
Black	—	**M22-XDP-S** ②
	Custom	**M22-XDP-S-ETCH** ③
	STOP	**M22-XDP-S-GB0**
	START	**M22-XDP-S-GB1**
	FORWARD	**M22-XDP-S-GB15**
	REVERSE	**M22-XDP-S-GB16**
	UP	**M22-XDP-S-GB3**
	DOWN	**M22-XDP-S-GB4**
	OFF	**M22-XDP-S-GB5**
	ON	**M22-XDP-S-GB6**
	◎	**M22-XDP-S-X0**
	ⓘ	**M22-XDP-S-X1**
	⊕	**M22-XDP-S-X4**
	⊖	**M22-XDP-S-X5**
	⇧	**M22-XDP-S-X7**
Red	—	**M22-XDP-R** ②
	Custom	**M22-XDP-R-ETCH** ③
	STOP	**M22-XDP-R-GB0**
	OFF	**M22-XDP-R-GB5**
	◎	**M22-XDP-R-X0**
Green	—	**M22-XDP-G** ②
	Custom	**M22-XDP-G-ETCH** ③
	START	**M22-XDP-G-GB1**
	ON	**M22-XDP-G-GB6**
	◎	**M22-XDP-G-X0**
	ⓘ	**M22-XDP-G-X1**
White	—	**M22-XDP-W** ②
	Custom	**M22-XDP-W-ETCH** ③
Yellow	—	**M22-XDP-Y** ②
	Custom	**M22-XDP-Y-ETCH** ③

M22-DP-G-X

Insertless Mushroom Head Operators

Bezel	Color	Catalog Number
Silver	Black	**M22-DP-S-X**
	Red	**M22-DP-R-X**
	Green	**M22-DP-G-X**
	Yellow	**M22-DP-Y-X**
Black	Black	**M22S-DP-S-X**
	Red	**M22S-DP-R-X**
	Green	**M22S-DP-G-X**
	Yellow	**M22S-DP-Y-X**
Metal	Black	**M22M-DP-S-X**
	Red	**M22M-DP-R-X**
	Green	**M22M-DP-G-X**
	Yellow	**M22M-DP-Y-X**

M22-K10

M22-FK01

Contact Blocks ④

Terminal Type	Contact Configuration ⑤	Catalog Number
Screw	NO	**M22-K10**
	NO, early-make	**M22-K10P**
	NC	**M22-K01**
	NC, late-break	**M22-K01D**
Spring-cage	NO	**M22-CK10**
	NC	**M22-CK01**
	NC, late-break	**M22-CK01D**
	2NO	**M22-CK20**
	2NC	**M22-CK02**
	NO-NC	**M22-CK11**
	NC	**M22-FK01** ⑥
	NO	**M22-FK10** ⑥

Notes

① 35 mm diameter mushroom head button.
② Minimum order quantity of (10).
③ When ordering, specify inscription per catalog number suffix from the Symbols Library (see **Pages V7-T1-123** to **V7-T1-130**) into the Order Notes. For example, M22-XDP-S-ETCH; Order Notes: Mark with symbol X91, Line item #_.
④ For complete listing of available contact blocks, see Accessories, **Pages V7-T1-105** to **V7-T1-110**.
⑤ All NC contact blocks are positively driven contact. ⊖
⑥ Additional contacts may not be stacked behind M22-F type contact blocks, M22-F can be stacked behind standard M22 contacts only.

1

Product Selection

Non-Illuminated Mushroom Head Pushbuttons, Maintained ①②

M22-DRP-R-K01

M22S-DRP-R-K01

M22M-DRP-R-K01

Complete Devices

Button Color	Contact Block Configuration ③	Silver Bezel Catalog Number	Black Bezel Catalog Number	Metal Bezel Catalog Number
Red	NC	**M22-DRP-R-K01**	**M22S-DRP-R-K01**	**M22M-DRP-R-K01**
	2NC	**M22-DRP-R-K02**	**M22S-DRP-R-K02**	**M22M-DRP-R-K02**
	1NO-2NC	**M22-DRP-R-K12**	**M22S-DRP-R-K12**	**M22M-DRP-R-K12**
	1NO-1NC	**M22-DRP-R-K11**	**M22S-DRP-R-K11**	**M22M-DRP-R-K11**

M22-DRP-G

M22S-DRP-G

M22M-DRP-G

Operators Only

Button Color	Silver Bezel Catalog Number	Black Bezel Catalog Number	Metal Bezel Catalog Number
Black	**M22-DRP-S**	**M22S-DRP-S**	**M22M-DRP-S**
Red	**M22-DRP-R**	**M22S-DRP-R**	**M22M-DRP-R**
Green	**M22-DRP-G**	**M22S-DRP-G**	**M22M-DRP-G**
Yellow	**M22-DRP-Y**	**M22S-DRP-Y**	**M22M-DRP-Y**

Notes

① 35 mm diameter mushroom head button.

② Maintained pushbuttons can be converted in the field to momentary operation by switching the locking ring, which is accessible through the side of the operator body.

③ All NC contact blocks are positively driven contact. ⊖

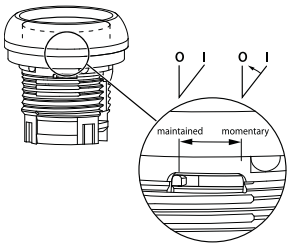

Note: This pilot device features a selectable function switch that enables the device to be set to either maintained or momentary operation.

Non-Illuminated Mushroom Head Pushbuttons, Maintained ①②

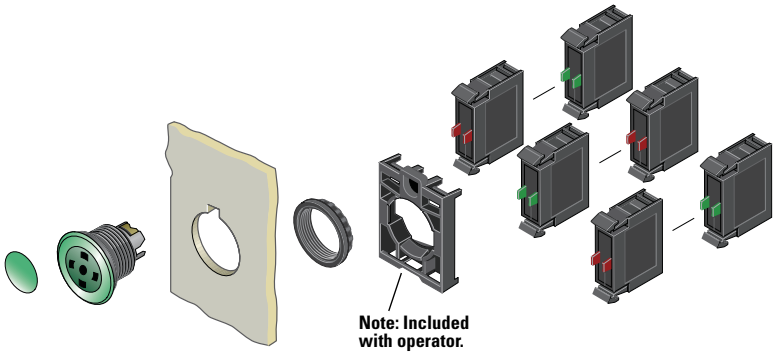

Components

M22-XDP-G

Mushroom Head Plates ③

Color	Inscription	Catalog Number
Black	—	**M22-XDP-S** ④
	Custom	**M22-XDP-S-ETCH** ⑤
	STOP	**M22-XDP-S-GB0**
	START	**M22-XDP-S-GB1**
	FORWARD	**M22-XDP-S-GB15**
	REVERSE	**M22-XDP-S-GB16**
	UP	**M22-XDP-S-GB3**
	DOWN	**M22-XDP-S-GB4**
	OFF	**M22-XDP-S-GB5**
	ON	**M22-XDP-S-GB6**
	◎	**M22-XDP-S-X0**
	ⓘ	**M22-XDP-S-X1**
	⊕	**M22-XDP-S-X4**
	⊖	**M22-XDP-S-X5**
	⇧	**M22-XDP-S-X7**
Red	—	**M22-XDP-R** ④
	Custom	**M22-XDP-R-ETCH** ⑤
	STOP	**M22-XDP-R-GB0**
	OFF	**M22-XDP-R-GB5**
	◎	**M22-XDP-R-X0**
Green	—	**M22-XDP-G** ④
	Custom	**M22-XDP-G-ETCH** ⑤
	START	**M22-XDP-G-GB1**
	ON	**M22-XDP-G-GB6**
	◎	**M22-XDP-G-X0**
	ⓘ	**M22-XDP-G-X1**
White	—	**M22-XDP-W** ④
	Custom	**M22-XDP-W-ETCH** ⑤
Yellow	—	**M22-XDP-Y** ④
	Custom	**M22-XDP-Y-ETCH** ⑤

M22-DRP-G-X

Insertless Mushroom Head Operators

Bezel	Color	Catalog Number
Silver	Black	**M22-DRP-S-X**
	Red	**M22-DRP-R-X**
	Green	**M22-DRP-G-X**
	Yellow	**M22-DRP-Y-X**
Black	Black	**M22S-DRP-S-X**
	Red	**M22S-DRP-R-X**
	Green	**M22S-DRP-G-X**
	Yellow	**M22S-DRP-Y-X**
Metal	Black	**M22M-DRP-S-X**
	Red	**M22M-DRP-R-X**
	Green	**M22M-DRP-G-X**
	Yellow	**M22M-DRP-Y-X**

M22-K10

M22-FK01

Contact Blocks ③

Terminal Type	Contact Configuration ⑥	Catalog Number
Screw	NO	**M22-K10**
	NO, early-make	**M22-K10P**
	NC	**M22-K01**
	NC, late-break	**M22-K01D**
Spring-cage	NO	**M22-CK10**
	NC	**M22-CK01**
	NC, late-break	**M22-CK01D**
	2NO	**M22-CK20**
	2NC	**M22-CK02**
	NO-NC	**M22-CK11**
	NC	**M22-FK01** ⑦
	NO	**M22-FK10** ⑦

Notes

① 35 mm diameter mushroom head button.

② Maintained pushbuttons can be converted in the field to momentary operation by switching the locking ring, which is accessible through the side of the operator body.

③ For complete listing of available button plates and contact blocks, see Accessories, **Pages V7-T1-105** to **V7-T1-110**.

④ Minimum order quantity of (10).

⑤ When ordering, specify inscription per catalog number suffix from the Symbols Library (see **Pages V7-T1-123** to **V7-T1-130**) into the Order Notes.
For example, M22-XDP-S-ETCH; Order Notes: Mark with symbol X91, Line item #_.

⑥ All NC contact blocks are positively driven contact. ⊖

⑦ Additional contacts may not be stacked behind M22-F type contact blocks, M22-F can be stacked behind standard M22 contacts only.

1

Double Pushbuttons

Product Description

Eaton's M22 double pushbutton line is perfect for applications such as motor and pump starting, as well as anytime space is limited. In addition to the two buttons that fit in one 22 mm hole is the integrated white indicating light between them. These three operators allow for multiple functions to occur in a single space. Green/red, black/white and black/black color options along with laser engraving allow for further custom applications.

Features

- Flush and extended, as well as color options allow for the perfect combination button
- Integrated indicating light adds even more functionality in one standard 22 mm hole
- Customizable laser engraving on all buttons
- LED offering only for improved brightness quality and up to 100,000 hours of operation
- More than 200,000 mechanical operations
- Capable of communicating via ASi protocol with ASi adapter modules

Protection Type

- IP66
- NEMA 4X, 13

Catalog Number Selection

Catalog Number Selection is for illustrative purposes only and not to be used to create new catalog numbers.

Double Pushbuttons

M22 – DDL – GR – GB5 – K10 – G

Bezel	
M22	= Silver
M22S	= Black

Operator Type	
DDL	= Extended buttons and light
DDLF	= Flush buttons and light
DDLM	= Extended bottom button

Button Plate Color	Top	Bottom
GR =	Green	Red
WS =	White	Black
S =	Black	Black

Inscription	
GB0	= STOP
GB1	= START
GB3	= UP
GB4	= DOWN
GB5	= OFF
GB6	= ON
GB14	= RESET
GB15	= FORWARD
GB16	= REVERSE
X0	= ◎
X1	= ①
X5	= ⊕
X5	= ⊖
X6	= Ⓡ
X7	= ⓣ
X5	= ⊘

Contact Blocks	
K10 = 1NO	**K30** = 3NO
K01 = 1NC	**K03** = 3NC
K20 = 2NO	**K21** = 2NO-1NC
K02 = 2NC	**K12** = 1NO-2NC
K11 = 1NO-1NC	

Light Units	
12–30 Vac/Vdc	
W	= White
R	= Red
G	= Green
B	= Blue
85–264 Vac	
230W	= White
230R	= Red
230G	= Green
230B	= Blue

Product Selection

Components

Double Pushbuttons, Extended Pushbuttons and Center Light, Momentary

Operators Only ①

	Bezel	Color Top	Bottom	Inscription Top	Bottom	Catalog Number
M22-DDL-GR-GB1-GB0	Silver	Green	Red	—	—	**M22-DDL-GR**
				Custom	Custom	**M22-DDL-GR-ETCH** ②
				ⓘ	◎	**M22-DDL-GR-X1-X0**
				START	STOP	**M22-DDL-GR-GB1-GB0**
		White	Black	—	—	**M22-DDL-WS**
				Custom	Custom	**M22-DDL-WS-ETCH** ②
				ⓘ	◎	**M22-DDL-WS-X1-X0**
				START	STOP	**M22-DDL-WS-GB1-GB0**
		Black	Black	—	—	**M22-DDL-S**
				Custom	Custom	**M22-DDL-S-ETCH** ②
				—	—	**M22-DDL-S-X4-X5**
				ⓘ	ⓘ	**M22-DDL-S-X7-X7**
M22S-DDL-GR-X1-X0	Black	Green	Red	—	—	**M22S-DDL-GR**
				Custom	Custom	**M22S-DDL-GR-ETCH** ②
				ⓘ	◎	**M22S-DDL-GR-X1-X0**
				START	STOP	**M22S-DDL-GR-GB1-GB0**
		White	Black	—	—	**M22S-DDL-WS**
				Custom	Custom	**M22S-DDL-WS-ETCH** ②
				ⓘ	◎	**M22S-DDL-WS-X1-X0**
				START	STOP	**M22S-DDL-WS-GB1-GB0**
		Black	Black	—	—	**M22S-DDL-S**
				Custom	Custom	**M22S-DDL-S-ETCH** ②
				⊕	—	**M22S-DDL-S-X4-X5**
				ⓘ	ⓘ	**M22S-DDL-S-X7-X7**

Notes

① Includes contact block mounting adapter.

② When ordering, specify inscription per catalog number suffix from the Symbols Library (see **Pages V7-T1-123** to **V7-T1-130**) into the Order Notes. For example, M22-DDL-S-ETCH; Order Notes: Mark with symbol X91, Line item #_.

Double Pushbuttons, Flush Top Pushbuttons and Center Light, Momentary

Operators Only ①

	Bezel	Color Top	Bottom	Inscription Top	Bottom	Catalog Number
M22-DDLF-GR	Silver	Green	Red	—	—	**M22-DDLF-GR**
				Custom	Custom	**M22-DDLF-GR-ETCH** ②
		White	Black	—	—	**M22-DDLF-WS**
				Custom	Custom	**M22-DDLF-WS-ETCH** ②
		Green	Red	ⓘ	◎	**M22-DDLF-GR-X1-X0**
		White	Black	ⓘ	◎	**M22-DDLF-WS-X1-X0**
M22S-DDLF-GR-X1-X0	Black	Green	Red	—	—	**M22S-DDLF-GR**
				Custom	Custom	**M22S-DDLF-GR-ETCH** ②
		White	Black	—	—	**M22S-DDLF-WS**
				Custom	Custom	**M22S-DDLF-WS-ETCH** ②
		Green	Red	ⓘ	◎	**M22S-DDLF-GR-X1-X0**
		White	Black	ⓘ	◎	**M22S-DDLF-WS-X1-X0**

Double Pushbuttons, Flush Top Pushbutton and Center Light, Extended Bottom Pushbutton, Momentary

Operators Only ①

	Bezel	Color Top	Bottom	Inscription Top	Bottom	Catalog Number
M22-DDLM-GR	Silver	Green	Red	—	—	**M22-DDLM-GR**
				Custom	Custom	**M22-DDLM-GR-ETCH** ②
		White	Black	—	—	**M22-DDLM-WS**
				Custom	Custom	**M22-DDLM-WS-ETCH** ②
		Green	Red	ⓘ	◎	**M22-DDLM-GR-X1-X0**
		White	Black	ⓘ	◎	**M22-DDLM-WS-X1-X0**
M22-DDLM-GR-X1-X0	Black	Green	Red	—	—	**M22S-DDLM-GR**
				Custom	Custom	**M22S-DDLM-GR-ETCH** ②
		White	Black	—	—	**M22S-DDLM-WS**
				Custom	Custom	**M22S-DDLM-WS-ETCH** ②
		Green	Red	ⓘ	◎	**M22S-DDLM-GR-X1-X0**
		White	Black	ⓘ	◎	**M22S-DDLM-WS-X1-X0**

Notes

① Includes contact block mounting adapter.

② When ordering, specify inscription per catalog number suffix from the Symbols Library (see **Pages V7-T1-123** to **V7-T1-130**) into the Order Notes. For example, M22-DDLM-GR-ETCH; Order Notes: Mark with symbol X91, Line item #_.

Double Pushbuttons

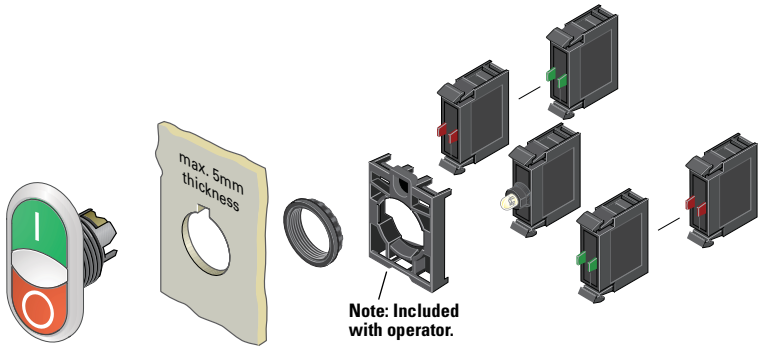

M22-LED-W

M22-FLED-_

Light Units ①

Terminal Type	LED Color	Light Unit Voltage	Catalog Number
Screw	White	12–30 Vac/Vdc	**M22-LED-W**
	Red		**M22-LED-R**
	Green		**M22-LED-G**
	Blue		**M22-LED-B**
Screw	White	85–264 Vac	**M22-LED230-W**
	Red		**M22-LED230-R**
	Green		**M22-LED230-G**
	Blue		**M22-LED230-B**
Spring-cage	White	12–30 Vac/Vdc	**M22-FLED-W**
	Red		**M22-FLED-R**
	Green		**M22-FLED-G**
	Blue		**M22-FLED-B**
	Red/Green/Yellow	24 Vdc	**M22-FLED-RG** ②
	Red, Green, Blue, Yellow, White, Violet, Turquoise		**M22-FLED-RGB** ②

M22-K10

M22-FK01

Contact Blocks ①

Terminal Type	Contact Configuration ③	Catalog Number
Screw	NO	**M22-K10**
	NO, early-make	**M22-K10P**
	NC	**M22-K01**
	NC, late-break	**M22-K01D**
Spring-cage	NO	**M22-CK10**
	NC	**M22-CK01**
	NC, late-break	**M22-CK01D**
	2NO	**M22-CK20**
	2NC	**M22-CK02**
	NO-NC	**M22-CK11**
	NC	**M22-FK01** ④
	NO	**M22-FK10** ④

Notes

① For complete listing of available light units and contact blocks, see Accessories, **Pages V7-T1-105** to **V7-T1-110**.

② Please see color input key on **Page V7-T1-108**.

③ All NC contact blocks are positively driven contact. ⊖

④ Additional contacts may not be stacked behind M22-F type contact blocks, M22-F can be stacked behind standard M22 contacts only.

1

Four-Way Pushbuttons

Product Description

Eaton's M22 four-way push-button is a truly unique offering. A four-way pushbutton offers four different buttons mounted in a single 22 mm hole. This is ideal not only for an application with limited space, but also directional applications (when ordered with the four arrow engraving option). Another unique option is the interlocked version, which prevents two opposite buttons from being actuated at the same time.

Features

- Four buttons in one operator allows for increased functionality in limited space
- Optional interlocking option, which prevents two buttons from being actuated at the same time
- Customizable laser engraving on all buttons for directional or other applications
- Capable of communicating via ASi protocol with ASi adapter modules

Protection Type

- IP66

Catalog Number Selection

Catalog Number Selection is for illustrative purposes only and not to be used to create new catalog numbers.

Four-Way Pushbuttons

M22 – D4 – S – X7 – K01

Bezel
M22 = Silver
M22S = Black

Button Color
S = Black

Inscription
ETCH = Custom ①
X7 = ⓘ⊖ⓘ⊖

① When ordering, specify inscription per catalog number suffix from the Symbols Library (see **Pages V7-T1-123** to **V7-T1-130**) into the Order Notes.
For example, M22-D4-S-ETCH; Order Notes: Mark with symbol X91, Line item #_.

Contact Blocks	
K10 = 1NO	**K30** =3NO
K01 = 1NC	**K03** =3NC
K20 = 2NO	**K21** =2NO-1NC
K02 = 2NC	**K12** =1NO-2NC
K11 = 1NO-1NC	

Operator Type
D4 = Four-way pushbutton, momentary, non-interlocked
DI4 = Four-way pushbutton, momentary, interlocked

Product Selection

Four-Way Pushbuttons, Momentary

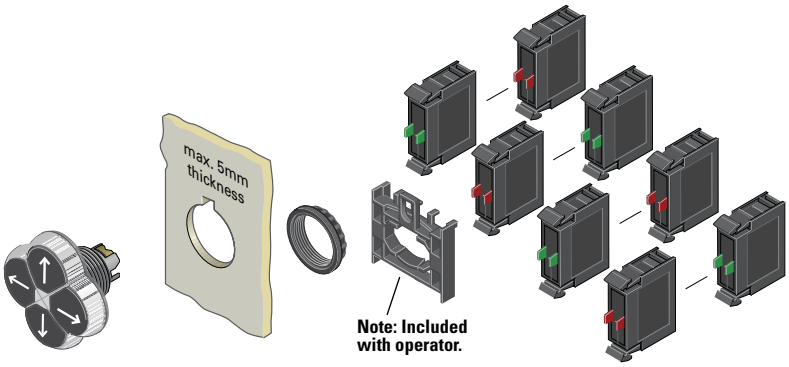

Components

M22-D4-S-X7

Operators Only ①

Type	Bezel	Color	Inscription	Catalog Number
Non-interlocked	Silver	Black	—	**M22-D4-S**
			Custom	**M22-D4-S-ETCH** ③
			Directional arrows	**M22-D4-S-X7**
	Black	Black	—	**M22S-D4-S**
			Custom	**M22S-D4-S-ETCH** ③
			Directional arrows	**M22S-D4-S-X7**
Interlocked	Silver	Black	—	**M22-DI4-S**
			Custom	**M22-DI4-S-ETCH** ③
			Directional arrows	**M22-DI4-S-X7**
	Black	Black	—	**M22S-DI4-S**
			Custom	**M22S-DI4-S-ETCH** ③
			Directional arrows	**M22S-DI4-S-X7**

M22-K10

M22-FK01

Contact Blocks ①②

Terminal Type	Contact Configuration ④	Catalog Number
Screw	NO	**M22-K10**
	NO, early-make	**M22-K10P**
	NC	**M22-K01**
	NC, late-break	**M22-K01D**
Spring-cage	NO	**M22-CK10**
	NC	**M22-CK01**
	NC, late-break	**M22-CK01D**
	2NO	**M22-CK20**
	2NC	**M22-CK02**
	NO-NC	**M22-CK11**
	NC	**M22-FK01** ⑤
	NO	**M22-FK10** ⑤

Notes

① Includes contact block mounting adapter.
② For complete listing of available contact blocks, see Accessories, **Pages V7-T1-105** to **V7-T1-110**.
③ When ordering, specify inscription per catalog number suffix from the Symbols Library (see **Pages V7-T1-123** to **V7-T1-130**) into the Order Notes.
For example, M22-D4-S-ETCH; Order Notes: Mark with symbol X91, Line item #_.
④ All NC contact blocks are positively driven contact. ⊖
⑤ Additional contacts may not be stacked behind M22-F type contact blocks, M22-F can be stacked behind standard M22 contacts only.

1

Joysticks

Product Description

Eaton's M22 joystick line comes in a wide variety of options. From vertical and horizontal two-position switches to the maintained four-position, these operators fit a variety of applications. An additional option, two switch points, allows for eight isolated circuits to be actuated individually on a single operator.

Features

- Available in four-position and two-position
- Two switch point option allows for two contacts in each direction (up to eight total contacts in one operator)
- Capable of communicating via ASi protocol with ASi adapter modules

Protection Type

- IP66

Product Selection

Joysticks

Components

M22-WJ2H

M22M-WJ2H

Operators ①

Number of Directions	Switching Position	Silver Bezel Catalog Number	Black Bezel Catalog Number	Metal Bezel Catalog Number
Two-position horizontal	Momentary	**M22-WJ2H**	**M22S-WJ2H**	**M22M-WJ2H**
Two switch points		**M22-WJ2H-2P**	**M22S-WJ2H-2P**	**M22M-WJ2H-2P**
Two-position horizontal	Maintained	**M22-WRJ2H**	**M22S-WRJ2H**	**M22M-WRJ2H**
Two-position vertical	Momentary	**M22-WJ2V**	**M22S-WJ2V**	**M22M-WJ2V**
Two switch points		**M22-WJ2V-2P**	**M22S-WJ2V-2P**	**M22M-WJ2V-2P**
Two-position vertical	Maintained	**M22-WRJ2V**	**M22S-WRJ2V**	**M22M-WRJ2V**
Four-position	Momentary	**M22-WJ4**	**M22S-WJ4**	**M22M-WJ4**
Two switch points		**M22-WJ4-2P**	**M22S-WJ4-2P**	**M22M-WJ4-2P**
Four-position	Maintained	**M22-WRJ4**	**M22S-WRJ4**	**M22M-WRJ4**

Note

① Includes contact block mounting adapter.

Joysticks

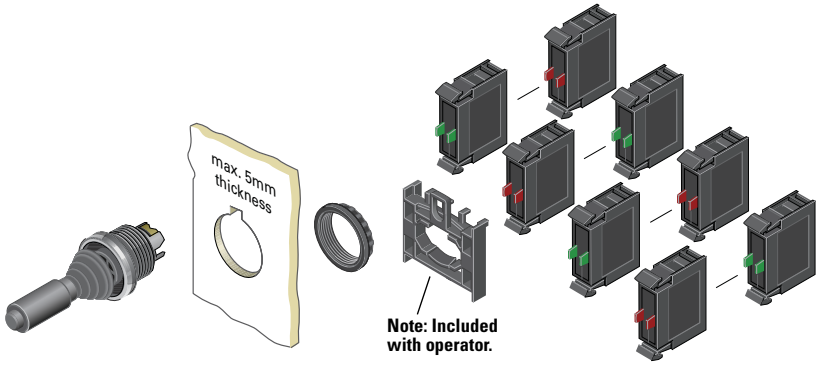

M22-K10

M22-FK01

Contact Blocks ①②

Terminal Type	Contact Configuration ③	Catalog Number
Screw	NO	**M22-K10**
	NO, early-make	**M22-K10P**
	NC	**M22-K01**
	NC, late-break	**M22-K01D**
Spring-cage	NO	**M22-CK10**
	NC	**M22-CK01**
	NC, late-break	**M22-CK01D**
	2NO	**M22-CK20**
	2NC	**M22-CK02**
	NO-NC	**M22-CK11**
	NC	**M22-FK01** ④
	NO	**M22-FK10** ④

Notes

① Includes contact block mounting adapter.

② For complete listing of available contact blocks, see Accessories, **Pages V7-T1-105** to **V7-T1-110**.

③ All NC contact blocks are positively driven contact. ⊖

④ Additional contacts may not be stacked behind M22-F type contact blocks, M22-F can be stacked behind standard M22 contacts only.

Joystick with Double Contact

The joystick allows the control of up to four directions of movement on machines. Different variants of the joystick have two/four-positions and other variants have two settings for each position. This allows, for example, two-speed settings for each direction. For this application, a standard normally open contact and an early-make contact are fitted in series. Momentary contact and latching contact versions are available.

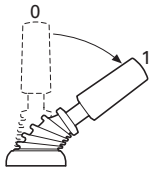

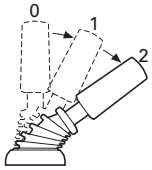

1

Potentiometers

Product Description

Eaton's M22 potentiometers allow for a ready to use operator in a conveniently sized package. M22 potentiometers include the resistive element, instead of just a knob, and a built in legend surrounding the knob. The slim design, with integrated contacts and the range of resistances available, allows for a quick install.

Features

- Scale markings on the knob allows the operator to be used without an additional legend plate
- Oversized knob option available
- Slim design allows for space saving and simple wiring and installation

Protection Type

- IP66
- NEMA 4X, 13

Product Selection

Potentiometers

M22-R10K

M22M-R10K

Complete Devices

Bezel	Resistance Rk	Catalog Number
Silver	1	**M22-R1K**
	4.7	**M22-R4K7**
	10	**M22-R10K**
	47	**M22-R47K**
	100	**M22-R100K**
	470	**M22-R470K**
Black	1	**M22S-R1K**
	4.7	**M22S-R4K7**
	10	**M22S-R10K**
	47	**M22S-R47K**
	100	**M22S-R100K**
	470	**M22S-R470K**
Metal	1	**M22M-R1K**
	4.7	**M22M-R4K7**
	10	**M22M-R10K**
	47	**M22M-R47K**
	100	**M22M-R100K**
	470	**M22M-R470K**
Oversized Knob		
Silver	1	**M22-R1K-RH**
	4.7	**M22-R4K7-RH**
	10	**M22-R10K-RH**
	47	**M22-R47K-RH**
	100	**M22-R100K-RH**
	470	**M22-R470K-RH**
Black	1	**M22S-R1K-RH**
	4.7	**M22S-R4K7-RH**
	10	**M22S-R10K-RH**
	47	**M22S-R47K-RH**
	100	**M22S-R100K-RH**
	470	**M22S-R470K-RH**
Metal	1	**M22M-R1K-RH**
	4.7	**M22M-R4K7-RH**
	10	**M22M-R10K-RH**
	47	**M22M-R47K-RH**
	100	**M22M-R100K-RH**
	470	**M22M-R470K-RH**

Acoustic Devices

Product Description

Eaton's M22 acoustic devices are a simple and aesthetic way to add a buzzer or indicator to any application. Fitting in the same 22 mm hole, these devices can be ordered in continuous or pulsed tone and with or without the IP40 enclosure.

Features

- Continuous or pulsed tone available
- 83 dB / 10 cm decibel rating
- Slim design allows for space saving and simple wiring and installation

Protection Type

- IP40
- NEMA 12

Product Selection

Acoustic Devices

M22-AMC-XAM

Complete Devices

Description	Decibel Rating	Catalog Number
Indicator with buzzer, black continuous tone, 18–30 Vac/Vdc	83 dB/ 10 cm	**M22-AMC-XAM**
Indicator with buzzer, black pulsed tone, 18–30 Vac/Vdc	83 dB/ 10 cm	**M22-AMC-XAMP**

M22-XAM

Buzzers

Description	Decibel Rating	Catalog Number
Indicator without buzzer, black	83 dB/ 10 cm	**M22-AMC**
Buzzer only, continuous tone, 18–30 Vac/Vdc	83 dB/ 10 cm	**M22-XAM**
Buzzer only, pulsed tone, 18–30 Vac/Vdc	83 dB/ 10 cm	**M22-XAMP**

Through-the-Door Operators

Product Description

Eaton's M22 through-the-door operators use the same familiar flush pushbutton look with the addition of a cut-to-length rod that allows for a simple reset operator.

Features

- Customizable laser engraving on all buttons
- More than five million mechanical operations
- Pushrod can be cut to length

Protection Type

- IP67, IP69K
- NEMA 4X, 13

Product Selection

Through-the-Door Operators ①

M22-DZ-B-X6

Complete Devices

Color	Inscription	Catalog Number
Blue	—	**M22-DZ-B**
	RESET	**M22-DZ-B-GB14**
	Ⓡ	**M22-DZ-B-X6**
Red	—	**M22-DZ-R**
	◎	**M22-DZ-R-X0**
	STOP	**M22-DZ-R-GB0**

M22-DZ-X

Buttonless Operator

Bezel	Catalog Number
Silver	**M22-DZ-X**
Metal	**M22M-DZ-X**

M22-XD-B

Button Plates ②

Color	Inscription	Catalog Number
Blue	—	**M22-XD-B** ③
	RESET	**M22-XD-B-GB14**
	Ⓡ	**M22-XD-B-X6**
Red	—	**M22-XD-R** ③
	◎	**M22-XD-R-X0**
	STOP	**M22-XD-R-GB0**

Bulkhead Interfaces

Product Description

Eaton's M22 bulkhead interfaces are another unique offering in the M22 line. This device allows for a secure connection to any USB or RJ45 connected device within an enclosure or panel. With an IP65 rating when closed, these devices are not only convenient, but robust and reliable.

Features

- Convenient and safe way to make a data connection to inside of the panel without opening the panel door

Protection Type

- IP65 when closed, IP20 when connected

Product Selection

Bulkhead Interfaces

M22-USB-SA

USB Socket ④⑤

Used for USB connection plug IP65 when closed, IP20 when connected.

Bezel	Catalog Number
Silver	**M22-USB-SA**

M22-RJ45-SA

RJ45 Socket ⑥

Used for RJ45 Ethernet connection IP65 when closed, IP20 when connected.

Bezel	Catalog Number
Silver	**M22-RJ45-SA**

Notes

① The pushrod is 3.24 in long and can be cut to length.
② Any combination of plate color and inscription is available.
③ Minimum order quantity of (10).
④ USB interface is complete with 2-ft-long USB cable.
⑤ USB interface is UL Listed, CSA approved and USB 3.0.
⑥ RJ45 interface is an eight-wire connector.

ASi Adapter Modules

Product Description

Eaton's M22 ASi adapter modules add functionality to every operator in the M22 line. These devices can be connected to any operator that uses contact blocks or LED units. The simple snap-on design allows for a quick integration of an entire application of operators to a communicating network.

Features

- Allows compatible operators to communicate on an ASi network
- Not only can the status of a contact block be read, but LEDs can be illuminated by an ASi adapter
- ASi adapters simply clip on to the back of the contact blocks and LEDs
- Insulation displacement connectors allow for installation of adapters without any tools
- Two integrated LEDs indicate status of communications

Protection Type

- IP20

Product Selection

ASi Adapter Modules

M22-ASI

Complete Devices

Description	Catalog Number
ASi adapter module	**M22-ASI**
ASi adapter module for base mounting	**M22-ASI-C**
ASi adapter module for E-stop	**M22-ASI-S**
ASi adapter module for E-stop base mounting	**M22-ASI-CS**

Palm Switches

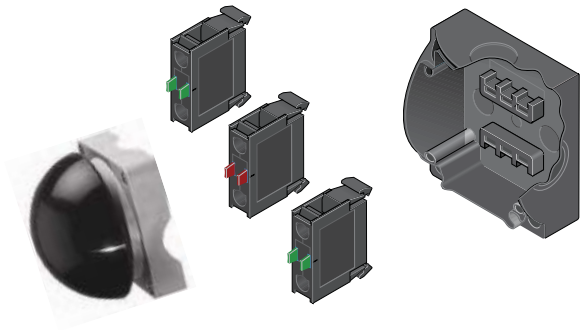

Product Description

Eaton's M22 palm switches are an oversized button that mount directly to an enclosure base. This allows for a standalone button that can be mounted anywhere. The enclosure uses base-mounted contact blocks, which allows for quick wiring and mounting. The palm switches come in momentary or maintained versions. As with other M22 operators, the palm switches are available as complete devices, including the enclosure and contact blocks or as modular components.

Features

- Oversized operator in black, red and yellow color options
- Button integrated directly into an enclosure
- Base mounting contact blocks allow for simple wiring and installation
- More than one million mechanical operations on momentary and 100,000 on maintained operators

Protection Type

- IP67, IP69K
- NEMA 4X, 13

Catalog Number Selection

Catalog Number Selection is for illustrative purposes only and not to be used to create new catalog numbers.

Palm Switches, Type 4X/13 Enclosure

FAK – S – KC10 – I

Operator Type
FAK = Palm switch

Operator Color
S = Black
R = Red
Y = Yellow

Contact Blocks
KC10 = NO
KC01 = NC
CKC10 = NO
CKC01 = NC

Enclosure Top Color
I = Gray
IY = Yellow

Product Selection

Complete Devices

Operator, Base and Contact Blocks ①

FAK-S-KC11-I

FAK-R-V-KC01-IY

Button Color	Contact Block Configuration ②	Catalog Number
Momentary		
Black	1NO-1NC	**FAK-S-KC11-I**
Red	1NO-1NC	**FAK-R-KC11-I**
Yellow	1NO-1NC	**FAK-Y-KC11-I**
Maintained		
Red	NC	**FAK-R-V-KC01-IY**
	2NC	**FAK-R-V-KC02-IY**
	1NO-2NC	**FAK-R-V-KC12-IY**
	1NO-1NC	**FAK-R-V-KC11-IY**

Notes

① For complete listing of available contact blocks, see Accessories, **Pages V7-T1-105** to **V7-T1-110**.

② All NC contact blocks are positively driven contact. ⊖

1

Components

FAK-S

Operators Only

Type	Button Color	Catalog Number
Momentary	Black	**FAK-S**
	Red	**FAK-R**
	Yellow	**FAK-Y**
Maintained	Red	**FAK-R-V-Y**

FAK-IU

Palm Switch Enclosure Base

Catalog Number
FAK-IU

M22-K10

M22-FK01

Contact Blocks ①

Terminal Type	Contact Configuration ②	Catalog Number
Screw	NO	**M22-KC10**
	NC	**M22-KC01**
Spring-cage	NO	**M22-CKC10**
	NC	**M22-CKC01**
	NC	**M22-FK01** ③
	NO	**M22-FK10** ③

Notes

① For complete listing of available contact blocks, see Accessories, **Pages V7-T1-105** to **V7-T1-110**.

② All NC contact blocks are positively driven contact. ⊖

③ Additional contacts may not be stacked behind M22-F type contact blocks, M22-F can be stacked behind standard M22 contacts only.

Accessories

M22-XD-S

M22-XDH-R

M22-XDP-G

Button Plates

Color	Inscription	Catalog Number Flush Pushbutton	Catalog Number Extended Pushbutton	Catalog Number Mushroom Head Button
Black	—	**M22-XD-S**	**M22-XDH-S**	**M22-XDP-S**
White	—	**M22-XD-W**	**M22-XDH-W**	**M22-XDP-W**
Red	—	**M22-XD-R**	**M22-XDH-R**	**M22-XDP-R**
Green	—	**M22-XD-G**	**M22-XDH-G**	**M22-XDP-G**
Yellow	—	**M22-XD-Y**	**M22-XDH-Y**	**M22-XDP-Y**
Blue	—	**M22-XD-B**	**M22-XDH-B**	—
Black, white, red, green, yellow, blue	—	**M22-XD-SWRGYB**	**M22-XDH-SWRGYB**	—
Black, red, green	—	**M22-XD-SRG**	**M22-XDH-SRG**	—
Black	Custom	**M22-XD-S-ETCH**	**M22-XDH-S-ETCH**	**M22-XDP-S-ETCH**
White	Custom	**M22-XD-W-ETCH**	**M22-XDH-W-ETCH**	**M22-XDP-W-ETCH**
Red	Custom	**M22-XD-R-ETCH**	**M22-XDH-R-ETCH**	**M22-XDP-R-ETCH**
Green	Custom	**M22-XD-G-ETCH**	**M22-XDH-G-ETCH**	**M22-XDP-G-ETCH**
Yellow	Custom	**M22-XD-Y-ETCH**	**M22-XDH-Y-ETCH**	**M22-XDP-Y-ETCH**
Blue	Custom	**M22-XD-B-ETCH**	**M22-XDH-B-ETCH**	—
Black	STOP	**M22-XD-S-GB0**	**M22-XDH-S-GB0**	**M22-XDP-S-GB0**
Red	STOP	**M22-XD-R-GB0**	**M22-XDH-R-GB0**	**M22-XDP-R-GB0**
Black	START	**M22-XD-S-GB1**	**M22-XDH-S-GB1**	**M22-XDP-S-GB1**
White	START	**M22-XD-W-GB1**	**M22-XDH-W-GB1**	—
Green	START	**M22-XD-G-GB1**	**M22-XDH-G-GB1**	**M22-XDP-G-GB1**
Black	CLOSE	**M22-XD-S-GB2**	**M22-XDH-S-GB2**	—
Black	UP	**M22-XD-S-GB3**	**M22-XDH-S-GB3**	**M22-XDP-S-GB3**
Black	DOWN	**M22-XD-S-GB4**	**M22-XDH-S-GB4**	**M22-XDP-S-GB4**
Black	OFF	**M22-XD-S-GB5**	**M22-XDH-S-GB5**	**M22-XDP-S-GB5**
Red	OFF	**M22-XD-R-GB5**	**M22-XDH-R-GB5**	**M22-XDP-R-GB5**
Black	ON	**M22-XD-S-GB6**	**M22-XDH-S-GB6**	**M22-XDP-S-GB6**
Green	ON	**M22-XD-G-GB6**	**M22-XDH-G-GB6**	**M22-XDP-G-GB6**
Black	TEST	**M22-XD-S-GB9**	**M22-XDH-S-GB9**	—
Blue	RESET	**M22-XD-B-GB14**	**M22-XDH-B-GB14**	—
Black	FORWARD	**M22-XD-S-GB15**	**M22-XDH-S-GB15**	**M22-XDP-S-GB15**
Black	REVERSE	**M22-XD-S-GB16**	**M22-XDH-S-GB16**	**M22-XDP-S-GB16**
Black	RAISE	**M22-XD-S-GB17**	**M22-XDH-S-GB17**	—
Black	LOWER	**M22-XD-S-GB18**	**M22-XDH-S-GB18**	—
Black	◎	**M22-XD-S-X0**	**M22-XDH-S-X0**	**M22-XDP-S-X0**
Red	◎	**M22-XD-R-X0**	**M22-XDH-R-X0**	**M22-XDP-R-X0**
Green	◎	—	—	**M22-XDP-G-X0**
Black	Ⓘ	**M22-XD-S-X1**	**M22-XDH-S-X1**	**M22-XDP-S-X1**
White	Ⓘ	**M22-XD-W-X1**	**M22-XDH-W-X1**	—
Green	Ⓘ	**M22-XD-G-X1**	**M22-XDH-G-X1**	**M22-XDP-G-X1**
Black	Ⓘⓘ	**M22-XD-S-X2**	**M22-XDH-S-X2**	—
Green	Ⓘⓘ	**M22-XD-G-X2**	**M22-XDH-G-X2**	—
Black	⊕	**M22-XD-S-X4**	**M22-XDH-S-X4**	**M22-XDP-S-X4**
Black	⊖	**M22-XD-S-X5**	**M22-XDH-S-X5**	**M22-XDP-S-X5**
Blue	Ⓡ	**M22-XD-B-X6**	**M22-XDH-B-X6**	—
Black	⇧	**M22-XD-S-X7**	**M22-XDH-S-X7**	**M22-XDP-S-X7**
Black	⇧	**M22-XD-S-X8**	**M22-XDH-S-X8**	—
Black	See ① below	**M22-XD-S-X9**	**M22-XDH-S-X9**	—
Black	See ① below	**M22-XD-S-X10**	**M22-XDH-S-X10**	—
Black	See ① below	**M22-XD-S-X11**	**M22-XDH-S-X11**	—
Black	See ① below	**M22-XD-S-X12**	**M22-XDH-S-X12**	—
Black	See ① below	**M22-XD-S-X13**	**M22-XDH-S-X13**	—
Black	See ① below	**M22-XD-S-X14**	**M22-XDH-S-X14**	—
Black	See ① below	**M22-XD-S-X15**	**M22-XDH-S-X15**	—
Black	See ① below	**M22-XD-S-X16**	**M22-XDH-S-X16**	—
Black	See ① below	**M22-XD-S-X17**	**M22-XDH-S-X17**	—

Note

① Refer to the Symbols Library, (see **Pages V7-T1-123** to **V7-T1-130**), for symbol image.

1

M22-XDLH-W

M22-XDL-G

Button Lenses

Color	Inscription	Catalog Number Flush	Catalog Number Extended
White	—	**M22-XDL-W**	**M22-XDLH-W**
Red	—	**M22-XDL-R**	**M22-XDLH-R**
Green	—	**M22-XDL-G**	**M22-XDLH-G**
Yellow	—	**M22-XDL-Y**	**M22-XDLH-Y**
Blue	—	**M22-XDL-B**	**M22-XDLH-B**
White	Custom	**M22-XDL-W-ETCH**	**M22-XDLH-W-ETCH**
Red	Custom	**M22-XDL-R-ETCH**	**M22-XDLH-R-ETCH**
Green	Custom	**M22-XDL-G-ETCH**	**M22-XDLH-G-ETCH**
Yellow	Custom	**M22-XDL-Y-ETCH**	**M22-XDLH-Y-ETCH**

Color	Inscription	Catalog Number Flush	Catalog Number Extended
Blue	Custom	**M22-XDL-B-ETCH**	**M22-XDLH-B-ETCH**
Red	STOP	**M22-XDL-R-GB0**	**M22-XDLH-R-GB0**
Green	START	**M22-XDL-G-GB1**	**M22-XDLH-G-GB1**
Red	OFF	**M22-XDL-R-GB5**	**M22-XDLH-R-GB5**
Green	ON	**M22-XDL-G-GB6**	**M22-XDLH-G-GB6**
Blue	RESET	**M22-XDL-B-GB14**	**M22-XDLH-B-GB14**
Red	◎	**M22-XDL-R-X0**	**M22-XDLH-R-X0**
Green	ⓘ	**M22-XDL-G-X1**	**M22-XDLH-G-X1**
Blue	®	**M22-XDL-B-X6**	**M22-XDLH-B-X6**

Mounting Adapters

	Description	Catalog Number
M22-A	Contact block mounting adapter	**M22-A**
M22-A4	Contact block mounting adapter, four-position (for use with four-way pushbuttons, joysticks and four-position selector switches only).	**M22-A4**
M22-LS	Allows mounting of M22 pushbuttons to LS-Titan limit switch bodies (for the full LS-Titan catalog section, see **PG08301004E**).	**M22-LS**

M22-K10

M22-FK01

Contact Blocks

Mounting Location	Terminal Type	Contact Configuration ①	Package Qty.	Catalog Number
Front	Screw	NO	1	**M22-K10**
		NO	25	**M22-K10-B25**
		NO	100	**M22-K10-B100**
		NO, early-make	1	**M22-K10P**
		NC	1	**M22-K01**
		NC	25	**M22-K01-B25**
		NC	100	**M22-K01-B100**
		NC, late-break	1	**M22-K01D**
		SMCB, NC	1	**M22-K01SMC10**
		SMCB, 2NC	1	**M22-K02SMC10**
Base		NO	1	**M22-KC10**
		NO	25	**M22-KC10-B25**
		NO	100	**M22-KC10-B100**
		NC	1	**M22-KC01**
		NC	25	**M22-KC01-B25**
		NC	100	**M22-KC01-B100**
		SMCB, NC	1	**M22-KC01SMC10**
		SMCB, 2NC	1	**M22-KC02SMC10**
Front	Spring-cage	NO	1	**M22-CK10**
		NC	1	**M22-CK01**
		NC, late-break	1	**M22-CK01D**
		2NO ②	1	**M22-CK20**
		2NC ②	1	**M22-CK02**
		NO-NC ②	1	**M22-CK11**
		NC	20	**M22-FK01** ③
		NO	20	**M22-FK10** ③
Base		NO	1	**M22-CKC10**
		NC	1	**M22-CKC01**

Notes

① All NC contact blocks are positively driven contact. ⊖

② Not stackable.

③ Additional contacts may not be stacked behind M22-F type contact blocks, M22-F can be stacked behind standard M22 contacts only.

M22-LED-W

M22-FLED-_

Light Units

Terminal Type	Mounting Location	LED Color	Light Unit Voltage	Catalog Number
Screw	Front	White	12–30 Vac/Vdc	**M22-LED-W**
		Red		**M22-LED-R**
		Green		**M22-LED-G**
		Blue		**M22-LED-B**
		White	85–264 Vac	**M22-LED230-W**
		Red		**M22-LED230-R**
		Green		**M22-LED230-G**
		Blue		**M22-LED230-B**
		White	207–264 Vac	**M22-LED230H-W**
		Red		**M22-LED230H-R**
		Green		**M22-LED230H-G**
		Blue		**M22-LED230H-B**
	Base	White	12–30 Vac/Vdc	**M22-LEDC-W**
		Red		**M22-LEDC-R**
		Green		**M22-LEDC-G**
		Blue		**M22-LEDC-B**
		White	85–264 Vac	**M22-LEDC230-W**
		Red		**M22-LEDC230-R**
		Green		**M22-LEDC230-G**
		Blue		**M22-LEDC230-B**
		White	207–264 Vac	**M22-LEDC230H-W**
		Red		**M22-LEDC230H-R**
		Green		**M22-LEDC230H-G**
		Blue		**M22-LEDC230H-B**
Spring-cage	Front	White	12–30 Vac/Vdc	**M22-CLED-W**
		Red		**M22-CLED-R**
		Green		**M22-CLED-G**
		Blue		**M22-CLED-B**
		White	85–264 Vac	**M22-CLED230-W**
		Red		**M22-CLED230-R**
		Green		**M22-CLED230-G**
		Blue		**M22-CLED230-B**
	Base	White	12–30 Vac/Vdc	**M22-CLEDC-W**
		Red		**M22-CLEDC-R**
		Green		**M22-CLEDC-G**
		Blue		**M22-CLEDC-B**
		White	85–264 Vac	**M22-CLEDC230-W**
		Red		**M22-CLEDC230-R**
		Green		**M22-CLEDC230-G**
		Blue		**M22-CLEDC230-B**
	Front	White	12–30 Vac/Vdc	**M22-FLED-W**
		Red		**M22-FLED-R**
		Green		**M22-FLED-G**
		Blue		**M22-FLED-B**
		Red/Green/Yellow	24 Vdc	**M22-FLED-RG** ①
		Red, Green, Blue, Yellow, White, Violet, Turquoise		**M22-FLED-RGB** ①

M22-XLED60

LED Resistor and Test Elements

Terminal Type	Mounting Location	Element Type	Voltage	Catalog Number
Screw	Front	Resistor ②③	42–60 Vac/Vdc	**M22-XLED60**
			220 Vdc	**M22-XLED220**
		Test	12–240 Vac/Vdc	**M22-XLED-T**
			85–264 Vac	**M22-XLED230-T**

Notes

① Please see color input key on **Page V7-T1-108**.
② Resistor units to be used with 12–30V light units.
③ Refer to **IL04716002E** for use of resistor elements in series for higher DC voltage.

Multi-Color LED Input Guide

Catalog Number		Terminal Color X1 +R	X2 +G	X3 +B	X4 GND
M22-FLED-RG	Red	■	—	—	■
	Green	—	■	—	■
	Yellow	■	■	—	■
M22-FLED-RGB	Red	■	—	—	■
	Green	—	■	—	■
	Yellow	■	■	—	■
	White	■	■	■	■
	Blue	—	—	■	■
	Violet	■	—	■	■
	Turquoise	—	■	■	■

Legend Plate Holders and Inserts, Pushbuttons and Double Pushbuttons ①

	Description	Inscription	Catalog Number
M22S-ST-X	Legend plate holder, without legend plate insert, for pushbuttons	—	**M22S-ST-X**
	Legend plate holder, without legend plate insert, for double pushbuttons	—	**M22S-STDD-X**
M22-XST-GB0	Legend plate insert	—	**M22-XST**
		Custom	**M22-XST-ETCH** ②
		STOP	**M22-XST-GB0**
		START	**M22-XST-GB1**
		OFF	**M22-XST-GB5**
		ON	**M22-XST-GB6**
		RUN	**M22-XST-GB7**
		FAULT	**M22-XST-GB8**
		OFF ON	**M22-XST-GB10**
		MAN. AUTO	**M22-XST-GB11**
		MAN. O AUTO	**M22-XST-GB12**
		HAND AUTO	**M22-XST-D11**
		HAND O AUTO	**M22-XST-D12**
		1	**M22-XST-X52**
		2	**M22-XST-X53**
		O I	**M22-XST-X88**
		O - I	**M22-XST-X89**
		I O II	**M22-XST-X93**

Notes

① Legend plates are IP66 and NEMA 4X/13.

② When ordering, specify inscription per catalog number suffix from the Symbols Library (see **Pages V7-T1-123** to **V7-T1-130**) into the Order Notes.
For example, M22-XD-S-ETCH; Order Notes: Mark with symbol X91, Line item #_.

Example

To order a legend plate for a pushbutton with non-standard markings (FORWARD):

1. Select legend plate holder—M22S-ST-X.
2. Select legend plate insert—M22-XST-ETCH.
3. Select FORWARD from the Symbols Library, **Pages V7-T1-123** to **V7-T1-130**, identified by GB15 suffix.
4. Indicate on the order form in the order notes—suffix GB15, line item # ___ .

Legend Plates, Complete ①

		Description	Inscription	Catalog Number
M22S-ST-GB0	For use with pushbuttons and indicating lights	Legend plate holder with insert	STOP	**M22S-ST-GB0**
			START	**M22S-ST-GB1**
			OFF	**M22S-ST-GB5**
			ON	**M22S-ST-GB6**
			RUN	**M22S-ST-GB7**
			FAULT	**M22S-ST-GB8**
			1	**M22S-ST-X52**
			2	**M22S-ST-X53**
	Selector switches	—	OFF ON	**M22S-ST-GB10**
			MAN. AUTO	**M22S-ST-GB11**
			MAN. O AUTO	**M22S-ST-GB12**
			HAND AUTO	**M22S-ST-D11**
			HAND O AUTO	**M22S-ST-D12**
			O I	**M22S-ST-X88**
			O - I	**M22S-ST-X89**
			I O II	**M22S-ST-X93**
M22-XZK	Emergency-stop operators	Rectangular yellow legend plate	—	**M22-XZK**
			Custom	**M22-XZK-ETCH** ②
			EMERGENCY-STOP	**M22-XZK-GB99**
M22-XYK		Square yellow legend plate	—	**M22-XYK**
			—	**M22-XYK-ETCH** ②
			EMERGENCY-STOP four-language	**M22-XYK1**
			EMERGENCY-STOP (top and bottom)	**M22-XYK5**
		Round yellow legend plate, 90 mm	—	**M22-XAK**
			Custom	**M22-XAK-ETCH** ②
			EMERGENCY-STOP four-language	**M22-XAK1**
			EMERGENCY-STOP (top and bottom)	**M22-XAK5**
M22-XBK1		Round yellow legend plate, 60 mm	—	**M22-XBK**
			Custom	**M22-XBK-ETCH** ②
			EMERGENCY-STOP four-language	**M22-XBK1**
			EMERGENCY-STOP (top and bottom)	**M22-XBK5**
M22-XCK1	Four-way pushbutton, joystick and four-position selector switches	Silver square legend plate	—	**M22-XCK**
			Custom	**M22-XCK-ETCH** ②
			Four directional arrows	**M22-XCK1**
			0-1-0-2-0-3-0-4	**M22-XCK2**
			Two directional arrows	**M22-XCK3**

Notes

① Legend plates are IP66 and NEMA 4X/13.

② When ordering, specify inscription per catalog number suffix from the Symbols Library (see **Pages V7-T1-123** to **V7-T1-130**) into the Order Notes. For example, M22-XD-S-ETCH; Order Notes: Mark with symbol X91, Line item #_.

1

Surface Mounting Enclosures ①

M22-IY1-PG

M22-IY-PG

Description	Catalog Number
Yellow top, black base for emergency-stop operators	**M22-IY1-PG**
One-element enclosure	**M22-I1-PG**
Two-element enclosure	**M22-I2-PG**
Three-element enclosure	**M22-I3-PG**
Four-element enclosure	**M22-I4-PG**
Six-element enclosure	**M22-I6-PG**
M20 connecting screw	**M22-XI**
M20 cord grip	**V-M20**

Flush Mounting Plates, Aluminum

M22-EY1

Finish	Rating	Catalog Number
One Hole		
Yellow paint for emergency-stop operators	—	**M22-EY1**
Gray anodized	IP65	**M22-E1**
Two Holes		
Gray anodized	IP65	**M22-E2**
Three Holes		
Gray anodized	IP65	**M22-E3**
Four Holes		
Gray anodized	IP65	**M22-E4**
Five Holes		
Gray anodized	IP65	**M22-E5**
Six Holes		
Anodized	IP40	**M22-E6**

Shrouds, Plastic

M22-H1

Description	Rating	Catalog Number
One-element	IP55	**M22-H1**
Two-element	IP55	**M22-H2**
Three-element	IP55	**M22-H3**
Four-element	IP40	**M22-H4**
Five-element	IP40	**M22-H5**
Six-element	IP40	**M22-H6**
Mounting plate	—	**M22-XE5**
Plaster keys for flush mounting	—	**M22-UPE**

Selector Switch Accessories

	Description	Catalog Number
M22-XW	Plunger bridge ②	**M22-XW**
M22-XWS	Key cover	**M22-XWS**
M22-XC-R	Key withdraw adapter ③	**M22-XC-R**
M22-XC-Y	Coding adapter	**M22-XC-Y**
M22-XGWK	Guard ring	**M22-XGWK**

Notes

① Requires use of base mounted contact blocks.

② Plunger needed to actuate center-mounted contact blocks. Used for non-illuminated three-position selector switches only.

③ Enables a keyed selector switch to be set to user-selected key withdraw position.

Emergency Stop Operator Accessories

	Description	Voltage	Catalog Number
M22-XGPV	Yellow guard ring	—	**M22-XGPV**
M22G-XGPV	Gray guard ring	—	**M22G-XGPV**
M22-MGTA	Rectangular guard	—	**M22-MGTA**
M22-PL-PV	Sealing shroud	—	**M22-PL-PV**
M22-XPV60-Y-120	Illuminated ring	24 Vac/Vdc	**M22-XPV60-Y-24**
		120 Vac	**M22-XPV60-Y-120**
		230 Vac	**M22-XPV60-Y-230**

Blanking Plugs

M22-B

Color	Catalog Number
Gray	**M22-B**
Black	**M22S-B**

Notching Tool

M22-NT

Punching tool used to produce the cutout for the anti-rotation tab as defined in IEC/EN 60947-5-1.

Description	Unit	Article Number	Catalog Number
St 37 sheet steel: Max. 3 mm thickness Stainless steel: Max. 1.5 mm thickness	1	028144	**M22-NT**

Mounting Accessories

	Description	Catalog Number
M22-TC and M22-TA	Telescopic clip with top-hat rail	**M22-TC**
	Telescopic clip	**M22-TA**
	Telescopic clip extension	**M22-TCV**
M22-IVS	DIN rail mounting adapter	**M22-IVS**
M22-GR	Mounting ring	**M22-GR**
M22-MS	Mounting ring tool	**M22-MS**
M22S-R30	Adapter ring set for 30 mm holes	**M22S-R30**

Protective Diaphragm

	For Use with …	Catalog Number
M22-T-D and M22-T-DD	Flush pushbuttons and indicating lights	**M22-T-D**
	Double pushbuttons	**M22-T-DD**

Dust Covers

	Description	Catalog Number
M22-ADC4	Contact block dust cover	**M22-XKDP**
	Operator dust cover, max three contact blocks	**M22-ADC**
	Operator dust cover, max four contact blocks	**M22-ADC4**

Kits

Description	Catalog Number
Includes one each: M22-XW, M22-XC-R, M22-XC-Y, M22S-B, M22-A, M22-XD-SWRGYB	**M22-KT1**

1

Coding Adapter Guide

Selector Switches

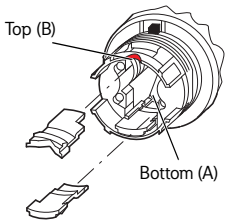

Two-Position Selector Switch

Top (B)	Bottom (A)	Catalog Number	Function
		M22(S)-W(L)(K)	Momentary
		M22(S)-WR(L)(K)	Maintained

Three-Position Selector Switch

Top (B)	Bottom (A)	Catalog Number	Function Left	Right
		M22(S)-W(L)(K)3	Momentary	Momentary
		M22(S)-WR(L)(K)3	Maintained	Maintained
		M22(S)-WR(L)(K)3-1	Maintained	Momentary
		M22(S)-WR(L)(K)3-2	Momentary	Maintained

Two-Position Key-Operated Selector Switch

Top (B)	Bottom (A)	Catalog Number	Center Key Withdraw	Right Function	Key Withdraw
		M22(S)-WS	Yes	Momentary	No
		M22(S)-WRS	Yes	Maintained	Yes
		M22(S)-WRS-A1	Yes	Maintained	No

Three-Position Key-Operated Selector Switch

Top (B)	Bottom (A)	Catalog Number	Left Function	Key Withdraw	Center Key Withdraw	Right Function	Key Withdraw
		M22(S)-WS3	Momentary	No	Yes	Momentary	No
		M22(S)-WRS3	Maintained	Yes	Yes	Maintained	Yes
		M22(S)-WRS3-A1	Maintained	No	Yes	Maintained	No
		M22(S)-WRS3-A2	Maintained	Yes	Yes	Maintained	No
		M22(S)-WRS3-A3	Maintained	No	Yes	Maintained	Yes
		M22(S)-WRS3-A4	Maintained	Yes	Yes	Momentary	No
		M22(S)-WRS3-A5	Maintained	No	Yes	Momentary	No
		M22(S)-WRS3-A6	Momentary	No	Yes	Maintained	Yes
		M22(S)-WRS3-A7	Momentary	No	Yes	Maintained	No

Technical Data and Specifications

Pushbuttons, Indicating Lights, Selector Switches and Emergency-Stop Operators

Description			Momentary Pushbuttons	Maintained Pushbuttons	Indicating Lights, Buzzers and Potentiometers	Emergency-Stop Operators	Selector Switches	Key-Operated Operators	Double Pushbuttons
General									
Standards			IEC/EN 60947 VDE 0660 UL #E29184	IEC/EN 60947 VDE 0660 UL #E29184	IEC/EN 60947 VDE 0660 UL #E29184	IEC/EN 60947 VDE 0660 UL #340491	IEC/EN 60947 VDE 0660 UL #E29184	IEC/EN 60947 VDE 0660 UL #E29184	IEC/EN 60947 VDE 0660 UL #E29184
Lifespan, mechanical	Operations	x 10^6	>5	>1	—	>0.1	>0.1	>0.1	>0.2
Operating frequency	Operations/h		≥3600	≥1800	—	≥600	≥2000	≥100	≥3600
Actuating force		n	≥5	≥5	—	≥50	–	—	≥5
Operating torque (screw terminals)		Nm	—	—	—	—	≥0.3	≥0.5	—
Protection Type									
IP			IP67, IP69K	IP67, IP69K	Indicating lights: IP67, 69K Buzzers: IP40 Potentiometers: IP66	IP67, IP69K	IP66	IP66	IP66
UL type			4X, 13	4X, 13	Indicating lights: 4X/13 Buzzers: 12 Potentiometers: 4X/13	4X, 13	4X, 13	4X, 13	4X, 13
Climatic proofing			Damp heat, constant, according to IEC 60068-2-78 Damp heat, cyclical to IEC 60068-2-30						
Ambient temperature, operating		°F (°C)	–13 to 158 (–25 to 70)	–13 to 158 (–25 to 70)	–13 to 158 (–25 to 70)	–13 to 158 (–25 to 70)	–13 to 158 (–25 to 70)	–13 to 158 (–25 to 70)	–13 to 158 (–25 to 70)
Mounting position			As required	As required	As required	As required	As required	As required	As required
Mechanical shock resistance to IEC 60068-2-27 shock duration 11 ms, half-sinusoidal		g	>30	>30	>30	>50	>30	>30	>30
Terminal Capacities									
Solid		AWG	—	—	20-16	—	—	—	—
		mm^2		—	0.5–1.5	—		—	
Stranded		AWG	—	—	20-16	—	—	—	—
		mm^2		—	0.5–1.5	—		—	
Contacts									
Rated impulse withstand voltage	U_{imp}	Vac	—	—	4000	—	—	—	—
Rated insulation voltage	U_i	V	—	—	2500	—	—	—	—
Overvoltage category/ pollution degree			—	—	III/3	—	—	—	—

Contact Blocks and Light Units

Description			Contact Blocks	LED Light Units
General				
Standards			IEC/EN 60947 VDE 0660 UL #E29184	IEC/EN 60947 VDE 0660 UL #E29184
Lifespan, mechanical	Operations	x 10^6	>5	—
Operating frequency	Operations/h		≥3600	—
Actuating force		n	≥5	—
Operating torque (screw terminals)		Nm	≤0.8	—
Protection Type				
IP			IP20	IP20
UL type			—	—
Climatic proofing			Damp heat, constant, according to IEC 60068-2-78 Damp heat, cyclical to IEC 60068-2-30	
Ambient temperature, operating		°F (°C)	–13 to 158 (–25 to 70)	–13 to 158 (–25 to 70)
Mounting position			As required	As required
Mechanical shock resistance to IEC 60068-2-27 shock duration 11 ms, half-sinusoidal		g	>30	>30
Terminal Capacities				
Solid		AWG	18–14	18–14
		mm^2	0.75–2.5	0.75–2.5
Stranded		AWG	20–14	20–14
		mm^2	0.5–2.5	0.5–2.5
Contacts				
Rated impulse withstand voltage	U_{imp}	Vac	6000	6000
Rated insulation voltage	U_i	V	500	500
Overvoltage category/ pollution degree			III/3	III/3
NEMA contact ratings			A600, Q300	—
Current draw			—	5–15 mA
Control Circuit Reliability				
at 24 Vdc/5 mA	H_F	Fault probability	$<10^{-7}$, <1 fault in 10^7 operations	—
at 5 Vdc/1 mA	H_F	Fault probability	$<5 \times 10^{-6}$, <1 fault in 5×10^6 operations	—
Max. Short-Circuit Protective Device				
Fuse	gG/gL	A	10	—
Switching Capacity				
Rated Operational Current				
AC-15				
115V	I_e	A	6	—
230V	I_e	A	6	—
400V	I_e	A	4	—
500V	I_e	A	2	—
DC-13				
24V	I_e	A	3	—
42V	I_e	A	1.7	—
60V	I_e	A	1.2	—
110V	I_e	A	0.6	—
220V	I_e	A	0.3	—
Lifespan, Electrical				
AC-15				
230V/0.5A	Operations	x 10^6	1.6	—
230V/1.0A	Operations	x 10^6	1	—
230V/3.0A	Operations	x 10^6	0.7	—
DV-13				
12V/2.8A	Operations	x 10^6	1.2	—

Contact Element Note: >200 Vac/60 Hz: –25/55°C

Palm Switches

Description			Momentary	Maintained	FAK-R-V-KC11-I
General					
Standards			IEC/EN 60947 VDE 0660	IEC/EN 60947 VDE 0660	IEC/EN 60947 VDE 0660
Lifespan, mechanical	Operations	x 10^6	>1	>0.1	>0.1
Operating frequency	Operations/h		≥3600	≥600	≥600
Actuating force		n	20–40	40–60	15–25
Operating torque		Nm	—	—	—
Degree of protection, IEC/EN 60529		IP	IP67, IP69K	IP67, IP69K	IP65
		UL Type	4X, 13	4X, 13	4X, 13
Climatic proofing			Damp heat, constant, to IEC 60068-2-78 Damp heat, cyclic, to IEC 60068-2-30		
Ambient temperature, operating		°F (°C)	–73 to 104 (–25 to 40)	–73 to 104 (–25 to 40)	–73 to 104 (–25 to 40)
Mounting position			As required		
Mechanical shock resistance to IEC 60068-2-27 shock duration 11 ms, half-sinusoidal		g	>15	>15	>15

ASi Adapter Modules

Description		M22-ASI	M22-ASI-C
General			
Standards		IEC/EN 60947, DIN EN 50295	IEC/EN 60947, DIN EN 50295
Radio interference suppression		EN 55011, EN 55022	EN 55011, EN 55022
Limit value class		—	—
Protection type		IP20	IP00
Climatic proofing		Damp heat, constant, to IEC 60068-2-78, cyclical, to IEC 60068-2-30	
Ambient temperature, operating	°F (°C)	–13 to 131 (–25 to 55)	–13 to 131 (–25 to 55)
Shock resistance shock duration 11 ms	g	>30	>30
Vibration to IEC 60068-2-27 (amplitude 1 mm)	Hz	—	—
Dimensions	mm	—	—
Weight	kg	—	—
Mounting		Front mounting	Front mounting
Mounting position		As required	As required
Power Supply			
Rated voltage to AS-interface specification	Vdc	26.5–31.6	26.5–31.6
Connection technique		Yellow plug-in terminal as insulation piercing terminal	Two cables onboard
Power supply		Completely from the AS-interface cable	
Addressing		Via connection to AS-interface cable	
Total power consumption of the AS-interface	mA	≥40	≥40
AS-interface		—	—
Rated operational current at full load	mA	—	—
Rated operational current when idle (no I, O set)	mA	—	—
Status LEDs		POWER AS-interface cable: green LED on the rear side of the element ERROR AS-interface, AS-interface master failure: red LED on the rear side of the element	POWER AS-interface cable: green LED on the board ERROR AS-interface, AS-interface master failure: red LED on the board

ASi-S Adapter Modules

Description		M22-ASI-S	M22-ASI-CS
Inputs			
Inputs, protected against short-circuit	Number	Two (normally 22V/5 mA)	Two (normally 22V/5 mA)
Voltage range	Vdc	—	—
Rated current per input	mA	—	—
High signal level	V	—	—
Low signal	mA	—	—
Length of connecting cables	cm	—	—
Outputs			
Outputs, protected against short-circuit	Number	One (normally 19V/8 mA)	One (normally 19V/8 mA)
Voltage range	Vdc	—	—
Max. Current Carrying Capacity			
All outputs		—	—
Σ three external outputs		—	—
Length of connecting cables	cm	—	—
Profile		S-3.A.E	S-3.A.E
Specification		2.1	2.1
Addresses	Number	62	62
Emergency-Stop Circuits			
Connection of the AS-interface line		Yellow plug terminal with insulation piercing	Two cables on the circuit board
Power supply		Complete from AS-interface, cable 26.5–31.6 Vdc	Complete from AS-interface, cable 26.5–31.6 Vdc
Fixing		Front mounted	Base mounted
Addressing		Via AS-interface cable	Via AS-interface cable
Max. total current	A	45 mA	45 mA
Ambient temperature, operating	°F (°C)	–13 to 131 (–25 to 55)	–13 to 131 (–25 to 55)
Shock resistance		30g/11 ms as per IEC 60068-2-27	30g/11 ms as per IEC 60068-2-27
Protection type		IP20	IP00
Climatic proofing		Damp heat, constant, to IEC 60068-2-78, cyclical, to IEC 60068-2-30	Damp heat, constant, to IEC 60068-2-78, cyclical, to IEC 60068-2-30
Mounting position		As required	As required
Standards		EN 50178 EN 50 295	EN 50178 EN 50 295
Inputs		Two-channel input (22V/5 mA) (moduled by code sequence) (two break contact sets M22-K01)	Two-channel input (22V/5 mA) (moduled by code sequence) (two break contact sets M22-K01)
Outputs		One output, typically 19V/8 mA, short-circuit proof	One output, typically 19V/8 mA, short-circuit proof
Status Displays			
Power, AS-interface cable		Green LED on the back	Green LED on the back
AS-interface error, AS-interface master failure		Red LED on the back	Red LED on the back
Profile		S-7.B.E	S-7.B.E

Dimensions

Approximate Dimensions in Inches (mm)

Operators and Indicating Lights

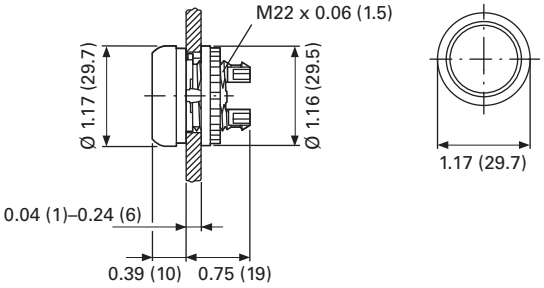

Pushbuttons

M22…-D-_

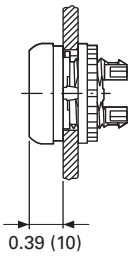

M22…-DH-_

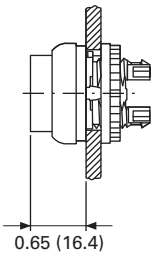

M22-DG(L)-_

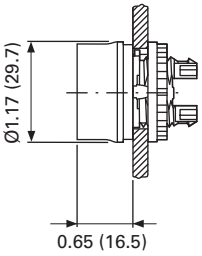

M22…-DD-_

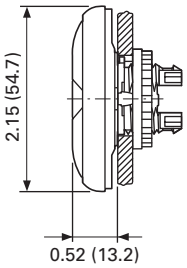

M22-D, Base Mounted

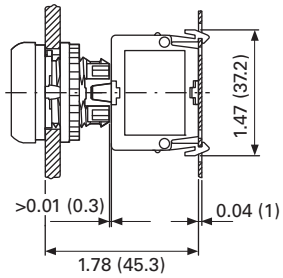

Selector Switches Operators

M22…-W-_

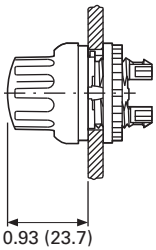

M22…-WL-_

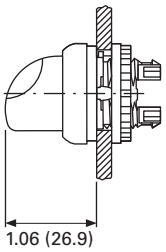

Key-Operated Selector Switches

M22…-W(R)S-_

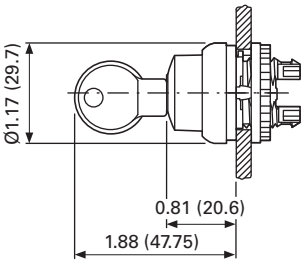

Indicating Light

M22-L_

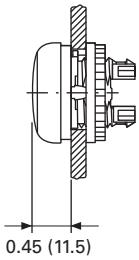

1

Approximate Dimensions in Inches (mm)

Illuminated Pushbuttons

M22…-DL-_ **M22…-DLH_**

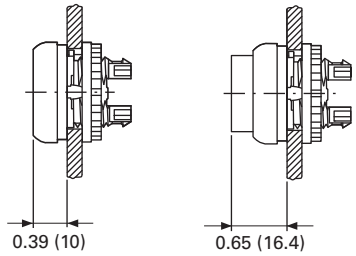

Mushroom Head Pushbutton

M22…-DP-_

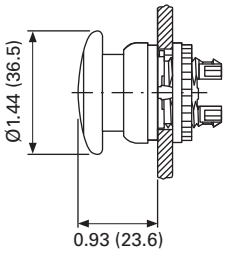

Emergency-Stop Operators

M22-PV_
M22S-PV_
M22-PVL_
M22-PVS_

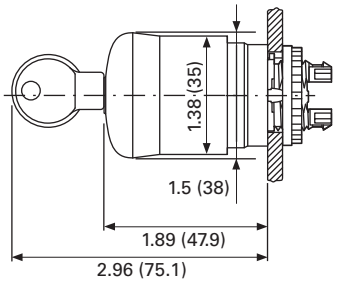

Potentiometer

M22(S)-R_

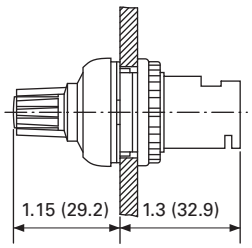

Contact Block Mounting Adapter

M22-A_ **M22S-A…**

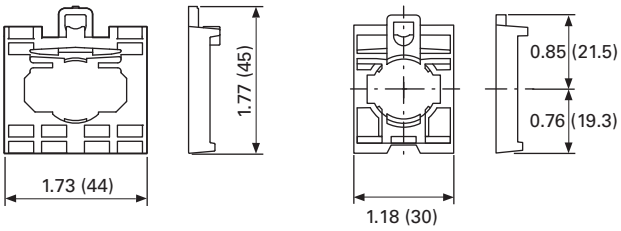

Front Mounted Centering Adapter

M22-ZA

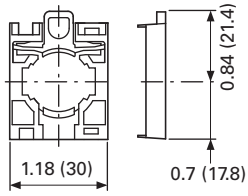

Front Mounted Indicating Light

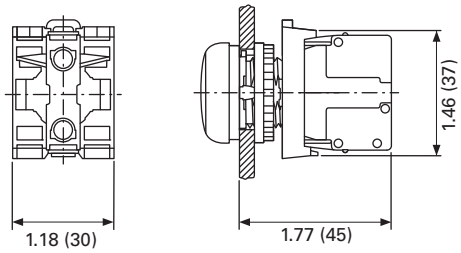

Pushbutton, Complete Devices

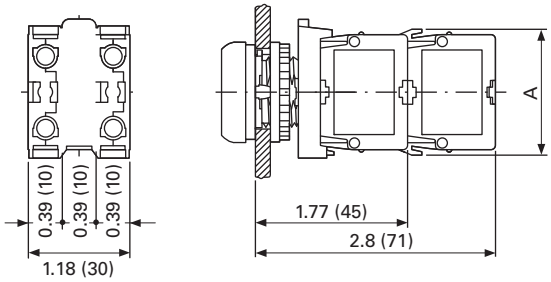

	1 x M22-K_	2 x M22-K_	1 x M22-CK_	2 x M22-CK_
A	1.46 (37.2)	1.46 (37.2)	1.54 (39.0)	1.54 (39.0)

Approximate Dimensions in Inches (mm)

DIN-Rail Mounting Adapter

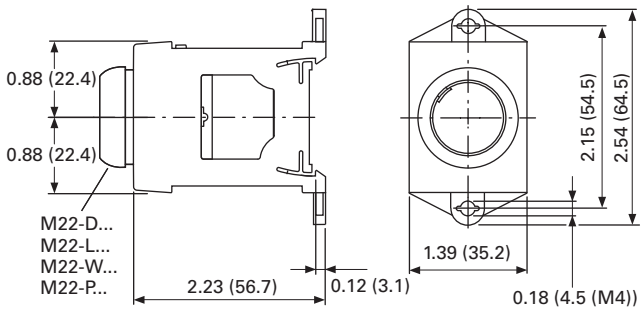

Pushbuttons and Indicating Lights with M22-TC Telescopic Clip and M22-TVC Extension

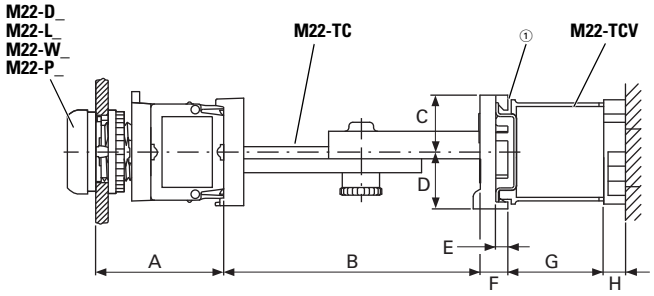

A	B	C	D	E	F	G	H
1.77 (45)	2.36–3.94 (60–100)	0.79 (20)	0.79 (20)	0.18 (4.5)	0.39 (10)	154 (39)	0.39 (10)

① Top-hat rail to IEC/EN 60715.

Palm Switches

FAK_

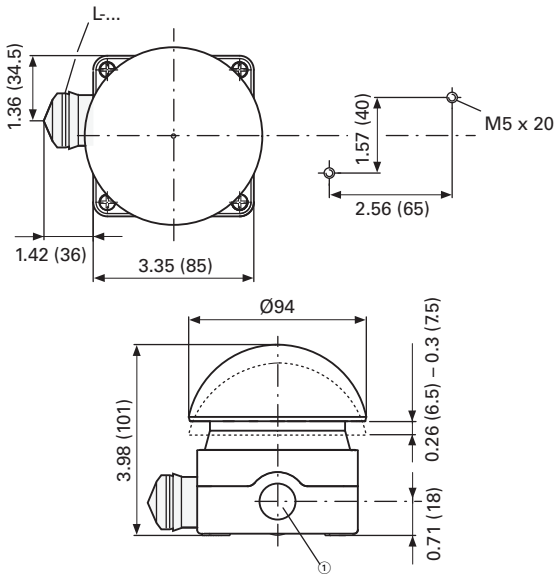

① 3 x M20 lateral, 1 x M16 in bottom.

Front Mounted Mounting Plate

M22-E_

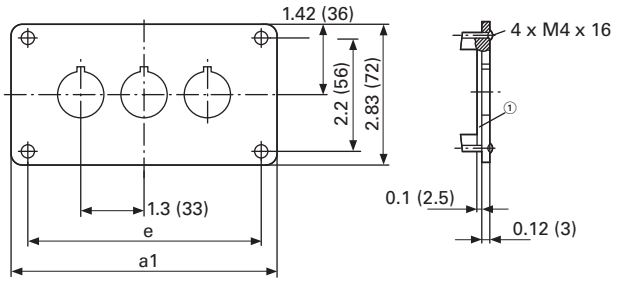

Catalog Number	a1	e
M22-E(Y) ①	2.83 (72)	2.21 (56)
M22-E2	4.13 (105)	3.50 (89)
M22-E3	5.43 (138)	4.80 (122)

Catalog Number	a1	e
M22-E4	6.73 (171)	6.10 (155)
M22-E5	8.03 (204)	7.40 (188)
M22-E6	9.33 (237)	8.70 (221)

Base Mounted Surface Mounting Enclosure

M22-I_

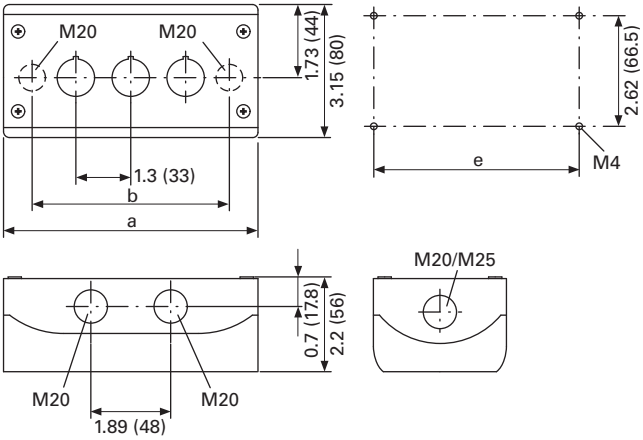

Catalog Number	Mounting Locations	a	b	e	Cable Entries		
M22-I(Y)1	1	2.83 (72.0)	1.68 (42.6)	2.30 (58.5)	2 x M16	3 x M20	2 x M25
M22-I2	2	4.72 (120.0)	3.37 (85.6)	4.19 (106.5)	2 x M20	3 x M20	2 x M25
M22-I3	3	6.02 (153.0)	4.67 (118.6)	5.49 (139.5)	2 x M20	2 x M25	4 x M20
M22-I4	4	7.32 (186.0)	5.97 (151.6)	6.79 (172.5)	2 x M20	2 x M25	4 x M20
M22-I6	6	9.92 (252.0)	8.57 (217.6)	9.39 (238.5)	2 x M20	2 x M25	4 x M20

1

Approximate Dimensions in Inches (mm)

Covers

M22-H_

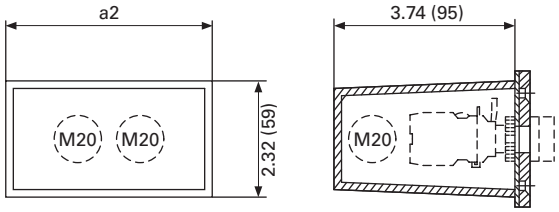

Catalog Number	a2	Cable Entry	Style
M22-H1	1.65 (42)	3 x M20	One-piece
M22-H2	2.95 (75)	4 x M20	
M22-H3	4.25 (108)	4 x M20	
M22-H4	5.55 (141)	4 x M20	Split
M22-H5	6.85 (174)	5 x M20	
M22-HE6	8.15 (207)	6 x M20	

Connecting Screw

M22-XI

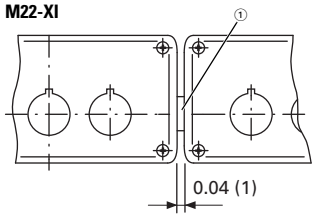

① Gasket.

Shroud with Plaster Keys

M22-UPE

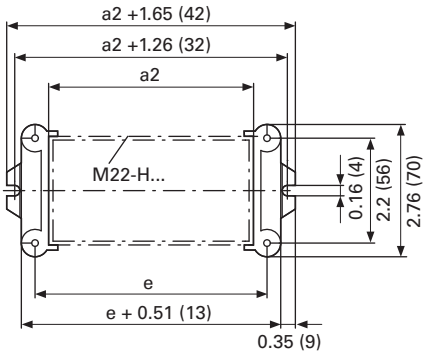

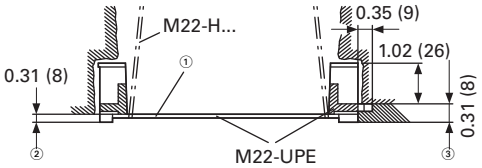

② Box for closing off when plastering.
③ Plaster thickness less than 8 mm.
④ Plaster thickness more than 8 mm.

Legend Plates

M22S-ST-_

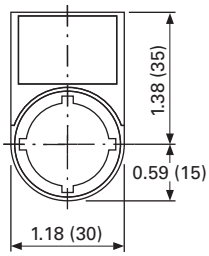

M22S-STDD-X

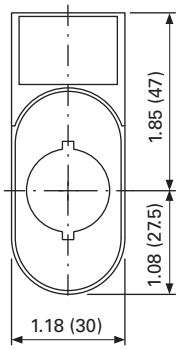

Mounting Hole with Lug Slot

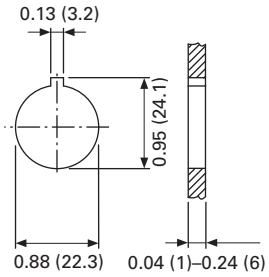

Approximate Dimensions in Inches (mm)

Grid Dimension to IEC/EN 60947

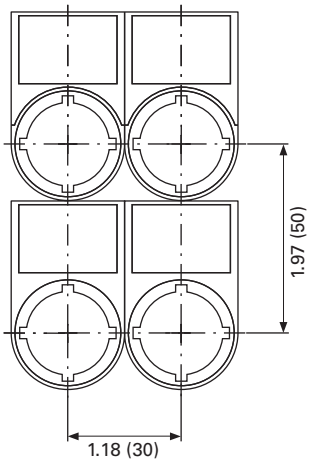

Grid Dimension for Various Combinations

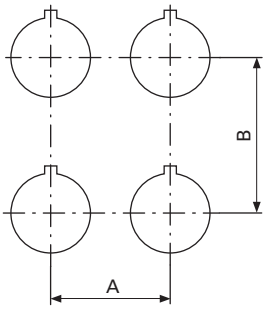

Pushbutton Diaphragm

Pushbutton diaphragm cannot be combined with label mount.

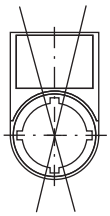

Catalog Number	A ≥	B ≥
M22(S)-_(IEC/EN 60947)	1.18 (30.0)	1.97 (50.0)
RMQ-Titan min.	1.18 (30.0)	1.58 (40.0)
M22-D_ + M22-T-D	1.30 (33.0)	1.58 (40.0)
M22-D(R)P_	1.50 (38.0)	1.58 (40.0)
M22-PV_	1.50 (38.0)	1.58 (40.0)
M22-PV(L) + M22-PL-PV	1.89 (48.0)	2.20 (56.0)
M22-PV(L)(S_) + M22-D_	1.30 (33.0)	1.58 (40.0)
M22-DDL_	1.18 (30.0)	2.17 (55.0)
M22-DDL_ + M22-T-DD	1.30 (33.0)	2.28 (58.0)
M22-ST_	1.18 (30.0)	1.97 (50.0)
M22-STDD_	1.18 (30.0)	2.95 (75.0)
M22-CK_	1.18 (30.0)	1.77 (45.0)
M22-CLED_	1.18 (30.0)	1.77 (45.0)
M22-XAK_	3.54 (90.0)	3.54 (90.0)
M22-XZK_	1.30 (33.0)	2.04 (52.0)
M22-XBK_	2.36 (60.0)	2.36 (60.0)
M22-XYK_	1.97 (50.0)	1.97 (50.0)
M22-D4	2.17 (55.0)	2.17 (55.0)
M22-WR…4	1.97 (50.0)	1.97 (50.0)
M22-W…J4	1.97 (50.0)	1.97 (50.0)

Grid Dimension for M22-DD_

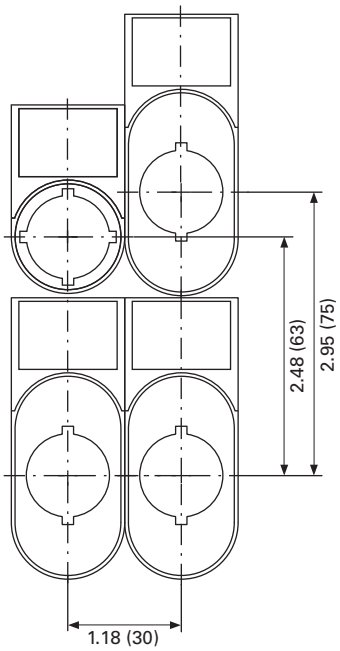

Grid Dimension for M22-DDL_

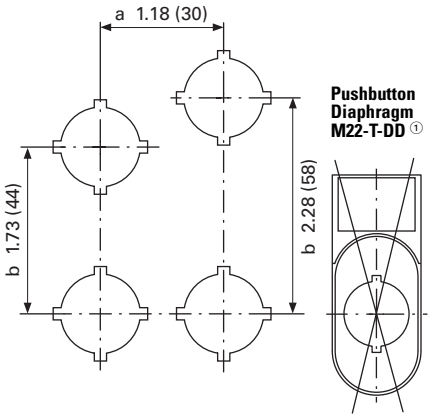

① Pushbutton diaphragm cannot be combined with label mount.

Emergency Stop Sealing Cover

M22-PL-PV

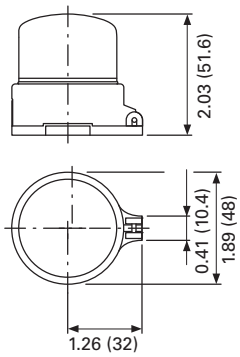

1

Approximate Dimensions in Inches (mm)

Blanking Plugs

M22…B-_

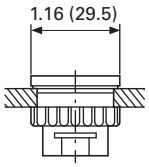

Pushbutton Diaphragm

M22-T-D

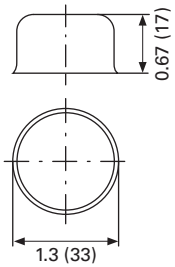

M22-T-D

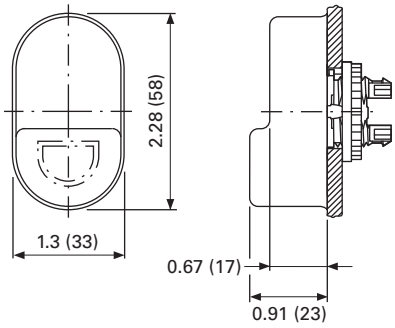

Guard Ring

M22-XGWK

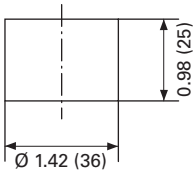

M22-XGPV

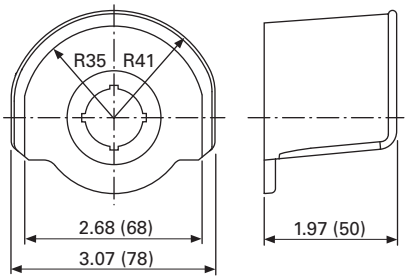

Key Cover

M22-XWS

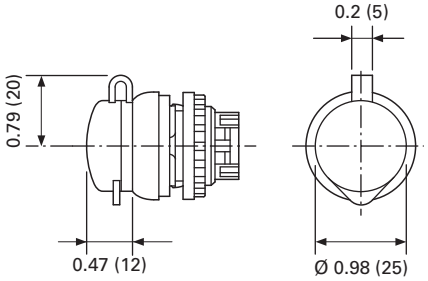

Emergency Stop Legend Plate

M22-XAK_

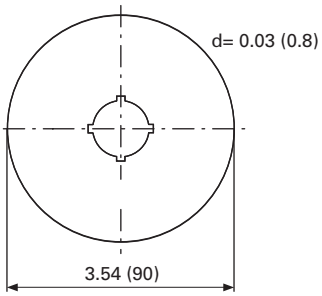

M22-X(Y)ZK_

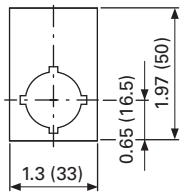

M22-XBK-_

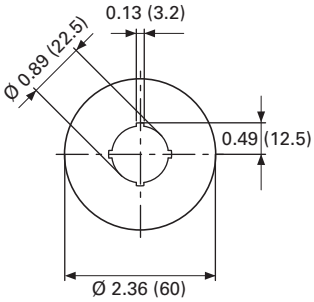

M22-XYK-_

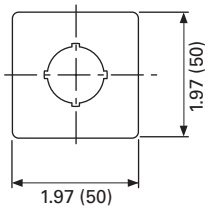

Joystick

M22…W…J_

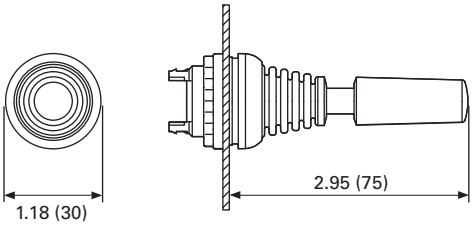

Four-Way Pushbutton

M22…-D…4-_

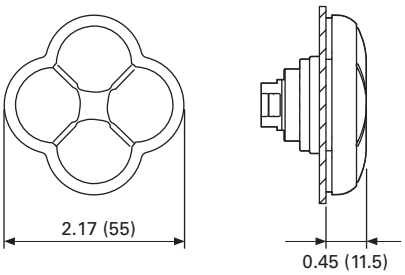

Symbols Library

Instructions for Ordering Laser Inscriptions

1. Identify part number to be inscribed.
2. Pick symbol from library and identify suffix code associated with the symbol.
3. Order part number already listed in the catalog with -ETCH suffix.
4. When placing an order by fax or Vistaline on the Web, reference order item number and indicate appropriate suffix code.

Example

To order a green flush button plate with the inscription AUTO HAND:

Order Catalog Number: M22-XD-G-ETCH (see **Page V7-T1-49**).

AUTO HAND inscription is found on **Page V7-T1-127** in the Symbols Library, suffix code is X91.

In the order notes, reference item number and suffix X91.

Letter height 3 mm: max. three lines, max. 12 characters per line.

Letter height 5 mm: max. two lines, max. eight characters per line.

Note: For symbols or text not found in the Symbols Library, please contact the Eaton Technical Resource Center at 1-877-ETN CARE (386-2273) or TRC@eaton.com.

1

Letter Height Specifications: ≤ five characters; letter height = 0.197 in (5 mm). > five characters; letter height = 0.118 in (3 mm).

Text—English

Inscription	Catalog Number Suffix
STOP	GB0
START	GB1
CLOSE	GB2
UP	GB3
DOWN	GB4
OFF	GB5
ON	GB6
RUN	GB7
FAULT	GB8
TEST	GB9
OFF ON	GB10
MAN. AUTO	GB11
MAN. 0 AUTO	GB12
RESET	GB14
FORWARD	GB15
REVERSE	GB16
RAISE	GB17

Inscription	Catalog Number Suffix
LOWER	GB18
LEFT	GB19
RIGHT	GB20
BRAKE	GB21
HIGH	GB22
LOW	GB23
FAST	GB24
SLOW	GB25
FASTER	GB26
SLOWER	GB27
OPEN	GB32
PROG	GB62
CALL	GB63
OCCUPIED	GB64
BYPASS 0 1	GB65
BYPASS UP	GB66
EMERGENCY-STOP	GB99

Text—German

Inscription	Catalog Number Suffix
Halt	D0
Start	D1
Zu	D2
Auf	D3
Ab	D4
Aus	D5
En	D6
Betrieb	D7
Störung	D8
Prüfung	D9
Aus Ein	D10
HAND AUTO	D11
HAND 0 AUTO	D12
Antrieb	D13
Entsperren	D14
Vorwärts	D15
Rückwärts	D16
Heben	D17
Senken	D18
Links	D19
Rechts	D20
Bremsen	D21
Hoch	D22
Niedrig	D23
Schnell	D24

Inscription	Catalog Number Suffix
Langsam	D25
HAND	D28
AUTO	D29
Einrichten	D30
Tippen	D31
Öffnen	D32
Steuerspannung	D33
Start Automatik	D34
Lampentest	D35
Phasenkontrolle	D36
Alarm	D37
Alarm - Reset	D38
Sammelstörung	D39
Quittieren	D40
Quittierung	D41
Steuerung Ein	D42
Steuerung Aus	D43
Störung quittieren	D44
FÜHLER int. ext.	D72
HEIZUNG 1 2	D73
AUS-BLASEN	D74
SOLLWERT int. ext.	D75
Not-Aus	D99
Not - Aus quittieren	D100

Text Size: 3 mm—Max. eight characters in first line; 10 characters in second line; eight characters in third line.

Text Size: 5 mm—Max. five characters per line.

Letter Height Specifications: ≤ five characters; letter height = 0.197 in (5 mm). > five characters; letter height = 0.118 in (3 mm).

Text—French

Inscription	Catalog Number Suffix
ARRÊT	F0
MARCHE	F1
FERMÉ	F2
MONTÉE	F3
DESCENTE	F4
ARRÊT	F5
MARCHE	F6
EN SERVICE	F7
PANNE	F8
ESSAI	F9
ARRÉT MARCHE	F10
MAN. AUTO	F11
MAN. 0 AUTO	F12
REARM.	F14
AVANT	F15
ARRIÈRE	F16
MONTER	F17
DESCENDRE	F18
GAUCHE	F19
DROITE	F20
DEFAULT	F67
SOUS TENSION	F68
ARRÊT D'URGENCE	F99

Text—Swedish

Inscription	Catalog Number Suffix
STOPP	S0
START	S1
STÄNG	S2
UPP	S3
NED	S4
FRÅN	S5
TILL	S6
KÖR	S7
FEL	S8
PROV	S9
FRAN TILL	S10
MAN. AUTO	S11
MAN. 0 AUTO	S12
ATERSTÄLLNING	S14
FRAM	S15
BACK	S16
ÖKA	S17
MINSKA	S18
VÄNSTER	S19
HÖGER	S20
BROMS	S21
HÖG	S22
LÅG	S23
ÖPPNA	S32
IN	S45
UT	S46
NÖDSTOPP	S99

Symbols

Inscription	Catalog Number Suffix
○	X0
|	X1
||	X2
|||	X3
+	X4
—	X5
R	X6
↑	X7
↖	X8
	X9
	X10
	X11
	X12

Inscription	Catalog Number Suffix
	X13
	X14
	X15
	X16
	X17
X	X18
L	X19
T	X20
IV	X21
V	X22
VI	X23
Y	X24
△	X25

Text Size: 3 mm—Max. eight characters in first line; 10 characters in second line; eight characters in third line.

Text Size: 5 mm—Max. five characters per line.

Inscription	Catalog Number Suffix
	X26
	X27
	X28
	X29
	X30
	X31
	X32
	X33
	X34
	X35
	X36
	X37
	X38
	X39

Inscription	Catalog Number Suffix
	X40
	X41
	X42
	X43
	X44
	X45
	X46
	X47
	X48
	X49
	X50
0	X51
1	X52
2	X53

Inscription	Catalog Number Suffix
3	X54
4	X55
5	X56
6	X57
7	X58
8	X59
9	X60
	X61
	X62
	X63
	X64
	X65
	X66
	X67

Inscription	Catalog Number Suffix
	X68
	X69
	X70
	X71
	X72
	X73
	X74
	X75
	X76
	X77
	X78
	X79
0	X80
0	X81

Text Size: 3 mm—Max. eight characters in first line; 10 characters in second line; eight characters in third line.

Text Size: 5 mm—Max. five characters per line.

Inscription	Catalog Number Suffix
	X82
	X83
0 I	X88
0 I	X89
I 0	X90
AUTO HAND	X91
II I	X92
I 0 II	X93
Auto 0 Man.	X94
I II	X95
	X100
	X101
	X102
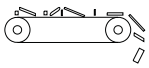	X103

Inscription	Catalog Number Suffix
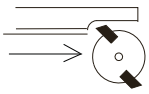	X104
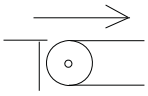	X105
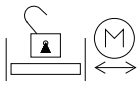	X106
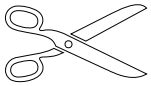	X107
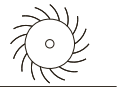	X108
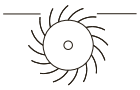	X109
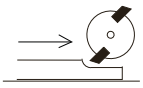	X110
	X111
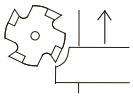	X112
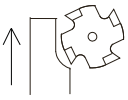	X113
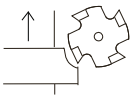	X114
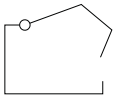	X115
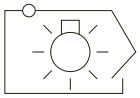	X116
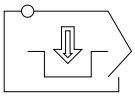	X117

Inscription	Catalog Number Suffix
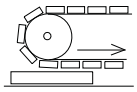	X118
	X119
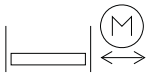	X120
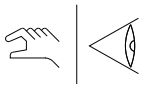	X121
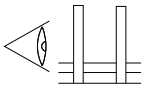	X122
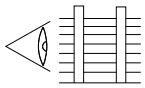	X123
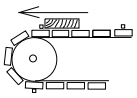	X124
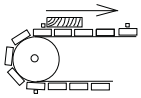	X125
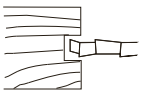	X126
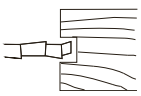	X127
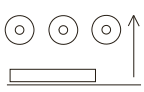	X128
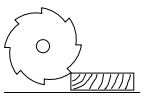	X129
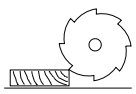	X130
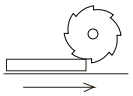	X131

Inscription	Catalog Number Suffix
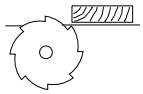	X132
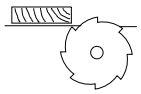	X133
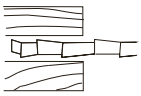	X134
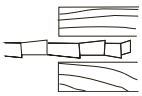	X135
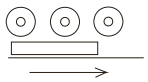	X136
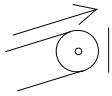	X137
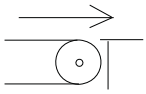	X138
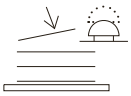	X139
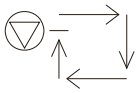	X140
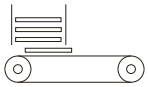	X141
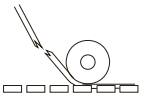	X142
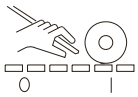	X143
	X144
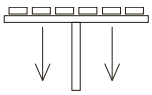	X145

Text Size: 3 mm—Max. eight characters in first line; 10 characters in second line; eight characters in third line.

Text Size: 5 mm—Max. five characters per line.

Inscription	Catalog Number Suffix
	X146
	X147
	X148
	X149
	X150
	X151
	X152
	X153
XV	X154
	X155
	X156
	X157
	X158
	X159

Inscription	Catalog Number Suffix
1	X160
2	X161
	X162
1	X163
0	X164
	X165
1	X166
2	X167
	X168
	X169
	X170
	X171
	X172
	X173

Inscription	Catalog Number Suffix
	X174
	X175
	X176
	X177
	X178
	X179
	X180
	X181
	X182
	X183
	X184
	X185
	X186
	X187

Inscription	Catalog Number Suffix
	X188
I	X189
	X190
	X191
	X192
	X193
	X194
F	X195
M	X196
M1	X197
M2	X198
S	X199
	X200
	X201

Text Size: 3 mm—Max. eight characters in first line; 10 characters in second line; eight characters in third line.

Text Size: 5 mm—Max. five characters per line.

Inscription	Catalog Number Suffix	Inscription	Catalog Number Suffix	Inscription	Catalog Number Suffix	Inscription	Catalog Number Suffix
	X202		X216		X230	Kg	X244
	X203		X217		X231	0 1	X245
L 1	X204		X218		X232		X246
L 2	X205		X219	P	X233		X247
L 3	X206		X220		X234		X248
A	X207		X221		X235	OPEN / CLOSE PROTECT.DOOR	X249
A	X208	1	X222		X236	ROTATE AXIS	X250
B	X209	1 / 2	X223		X237	SET IN	X251
B	X210		X224	0 1	X238	CLAMP / UNCLAMP CLAMP.DEVICE	X252
I	X211	RESET	X225	0 1	X239		X253
I I	X212		X226	0 1	X240		X254
I I I	X213		X227	0 1	X241		X255
	X214	R	X228		X242		X256
B	X215		X229	0 1	X243		X257

Text Size: 3 mm—Max. eight characters in first line; 10 characters in second line; eight characters in third line.

Text Size: 5 mm—Max. five characters per line.

Inscription	Catalog Number Suffix
	X258
	X259
	X260
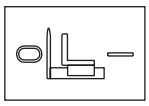	X261
	X262
	X263
	X264

Inscription	Catalog Number Suffix
	X265
	X266
	X267
	X268
	X269
	X270
CHEM I	X271

Inscription	Catalog Number Suffix
CHEM II	X272
CHEM III	X273
	X274
	X275
CONTI CUT	X276
	X277
TOOL UNLOCKING	X278

Inscription	Catalog Number Suffix
T1 - Tn CHANGE TOOL ARM	X279
	X280
OUT OF SERVICE	X281
	X282
	X283
	X284
	X285

Text Size: 3 mm—Max. eight characters in first line; 10 characters in second line; eight characters in third line.

Text Size: 5 mm—Max. five characters per line.

22.5 mm RMQ Compact Pushbuttons—C22

Contents

Description	*Page*
22.5 mm RMQ Compact Pushbuttons—C22	
Product Selection Guide	**V7-T1-133**
Pushbuttons—Non-Illuminated and Illuminated	**V7-T1-134**
Indicating Lights	**V7-T1-147**
Emergency Stops	**V7-T1-150**
Selector Switches	**V7-T1-153**
Technical Data and Specifications	**V7-T1-160**
Dimensions	**V7-T1-162**

Product Overview

Product Description

Eaton's C22 compact pushbutton line offers an industry leading array of functional, attractive, and ergonomically designed "all-in-one" illuminated and non-illuminated pushbuttons, selector switches, emergency stops and indicating lights. The complete illuminated line is only offered in LED light units to ensure high-quality brightness and up to 100,000 hours of LED illumination. C22 operators are available with either a silver or black bezel and share the exact same front of the panel look and feel as Eaton's M22 line. The C22's compact, "all-in-one" design with the contact block(s) and operators integral provides the user with a simple solution.

The 2017 product extension C22 with pigtail has more than doubled the portfolio. The C22 with pigtail now allows customers the ability to directly mount the product without the need for pushbutton enclosures. With three different connection methods and multiple lengths, the C22 with pigtail can be used for a wide range of applications.

Wide Product Breadth

- In addition to the standard compact offering of indicating lights and pushbuttons, Eaton's C22 offers keyed and non-keyed operators and emergency stops
- Hundreds of styles with standard laser etch markings with the ability to use custom M22 laser etched buttons in conjunction with C22 buttonless operators
- Pigtail lengths vary from 0.2 to 3.5 m and allow three connection options—M8, M12 and flying lead

LED Indicators

- 100,000 hours of life in high-vibration environments
- Lenses specifically designed for LED illumination

Rugged Design

- Pushbuttons (momentary) rated for 5 million mechanical operations and selector switches (non-keyed) rated for 1 million mechanical operations
- All components have IP65 rating, and some carry IP67 and IP69K for wash-down environment, which also means oil tight
- C22 with pigtail has an IP65 rear rating, eliminating the need for an enclosure in dust and water jet applications

Standards and Certifications

All operators are IEC/EN 60947 VDE 0660, UL Listed, and CSA Certified.

All operators carry an IP65, IP66, IP67 or IP69K rating.

All products carry ratings of NEMA 1, 3R, 4X, 12 and 13

Features

- Field convertible maintained pushbuttons from maintained to momentary
- LED offering only for all illuminated operators
- Laser engraved pushbuttons and lenses
- Heavy-duty construction with a minimum of IP65 and UL NEMA® Type 4X/13 on front of panel operators. Many operators even carry IP67 and IP69K, for the toughest applications
- Silver or black colored nylon bezels
- Notched hole mounting with anti-rotation tab and central nut mounting on each operator
- Pushbuttons (momentary) rated for 5 million mechanical operations and selector switches (non-keyed) rated for 1 million mechanical operations
- Unique compact offerings, including keyed and non-keyed operators and emergency stops

Benefits

- Compact, "all-in-one" operator and contact block design simplifies product selection, inventory, and installation
- Field convertibility of pushbuttons and selector switches helps distributors and customers reduce inventory and increase functionality
- LED offering only for improved brightness quality and up to 100,000 hours of operation
- Plastic construction is corrosion resistant
- Eliminate enclosure, on machine installations
- Operators are designed for rugged environments, ideal for wash-down applications (reference each operator's IP ratings for ingress protection definition)
- Anti-rotation tab saves installation time and prevents operator rotation
- High mechanical and electrical life allows for use in tough and challenging applications
- Laser inscription capabilities allow for high quality, wear-resistant markings
- By having a compact design emergency stop, the C22 design eliminates the need for self-monitoring contact blocks
- M12/M8 connections allow connection directly into communications systems such as SmartWire-DT or AS6

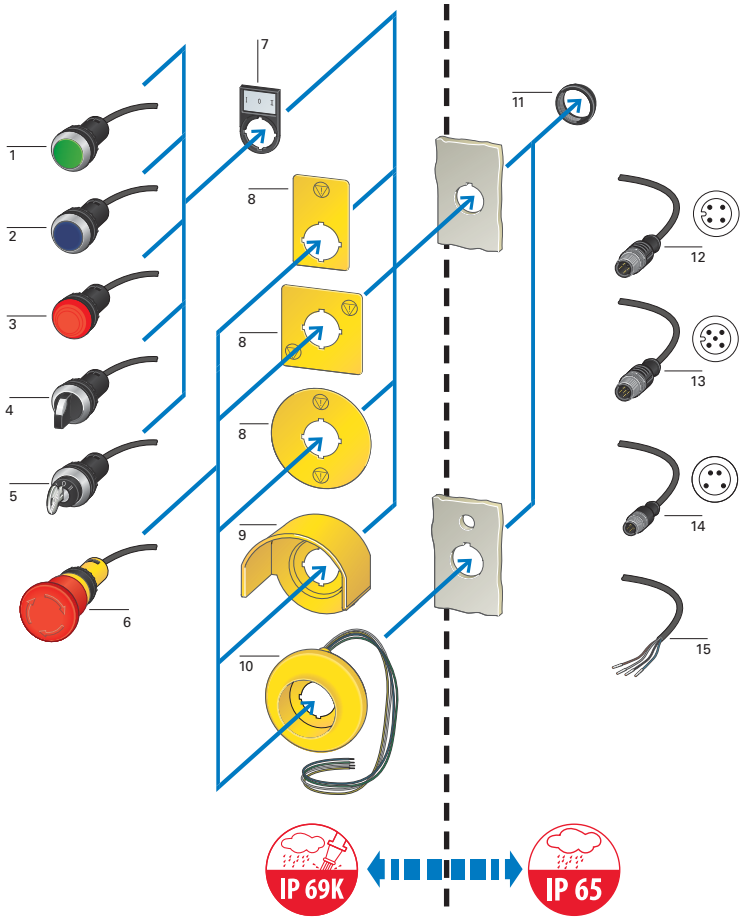

Legend

1 = Pushbutton	
2 = Illuminated pushbutton	
3 = LED indicator	
4 = Knob selector	
5 = Key selector	
6 = E-stop	
7 = Legend plate	
8 = E-stop legend plates	
9 = Guard rings	
10 = Illuminated guard ring	
11 = Mounting ring	
12 = M12 connector: 4-pole	
13 = M12 connector: 5-pole	
14 = M8 connector: 4-pole	
15 = Flying lead	

Product Selection Guide

Pushbuttons

Description	Non-illuminated, flush		Non-illuminated, flush, pigtail (M8/M12/flying lead)		Illuminated, flush		Illuminated, flush, pigtail (M8/M12/flying lead)	
Operator	Momentary	Maintained	Momentary	Maintained	Momentary	Maintained	Momentary	Maintained
Product Selection	**Page V7-T1-135**	**Page V7-T1-137**	**Page V7-T1-136**	**Page V7-T1-138**	**Page V7-T1-141**	**Page V7-T1-143**	**Page V7-T1-142**	**Page V7-T1-144**

Extended Pushbuttons

Description	Non-illuminated, extended		Illuminated, extended	
Operator	Momentary	Maintained	Momentary	Maintained
Product Selection	**Page V7-T1-139**	**Page V7-T1-140**	**Page V7-T1-145**	**Page V7-T1-146**

Indicating Lights

Description	Indicating lights	Indicating lights with pigtail (M8/M12/flying lead)
Product Selection	**Page V7-T1-148**	**Page V7-T1-149**

Emergency Stops

Description	Twist release	Keyed-release	Twist release with or without indicator and flying lead/M12	Push-Pull with Pigtail (flying lead/M12)
Product Selection	**Page V7-T1-151**	**Page V7-T1-151**	**Page V7-T1-152**	**Page V7-T1-152**

Selector Switches

Description	Non-illuminated, knob type	Key-operated	Non-illuminated, knob type, with pigtail	Key-operated with pigtail
Product Selection	**Page V7-T1-154**	**Page V7-T1-156**	**Page V7-T1-155**	**Page V7-T1-158**

Pushbuttons—Non-Illuminated and Illuminated

Contents

Description	*Page*
Pushbuttons—Non-Illuminated and Illuminated	
Non-Illuminated Pushbuttons, Flush, Momentary	**V7-T1-135**
Non-Illuminated Pushbuttons, Flush, Momentary, with Pigtail	**V7-T1-136**
Non-Illuminated Pushbuttons, Flush, Maintained	**V7-T1-137**
Non-Illuminated Pushbuttons, Flush, Maintained, with Pigtail	**V7-T1-138**
Non-Illuminated Pushbuttons, Extended, Momentary	**V7-T1-139**
Non-Illuminated Pushbuttons, Extended, Maintained	**V7-T1-140**
Illuminated, Flush, Momentary	**V7-T1-141**
Illuminated Pushbuttons, Flush, Momentary, with Pigtail	**V7-T1-142**
Illuminated Pushbuttons, Flush, Maintained	**V7-T1-143**
Illuminated Pushbuttons, Flush, Maintained, with Pigtail	**V7-T1-144**
Illuminated Pushbuttons, Extended, Momentary	**V7-T1-145**
Illuminated Pushbuttons, Extended, Maintained	**V7-T1-146**
Indicating Lights	**V7-T1-147**
Emergency Stops	**V7-T1-150**
Selector Switches	**V7-T1-153**
Technical Data and Specifications	**V7-T1-160**
Dimensions	**V7-T1-162**

Pushbuttons—Non-Illuminated and Illuminated

Product Description

Eaton's C22 Compact Pushbuttons are a complete line of monoblock type pushbuttons with the contact blocks, mounting adapter, and operator all-in-one. The C22 pushbuttons offer the same look and feel as their modular counterpart, the M22. They also carry many of the same rugged ratings and options, such as laser etching, field convertibility, and LED technology. They also feature IP65 rear ratings when purchased with pigtail, M8/M12/flying lead.

Note: For additional accessories, please see **Pages V7-T1-105** to **V7-T1-111**, 22.5 mm Modular Pushbuttons—M22 Accessories.

Features

- Field convertible maintained pushbuttons from maintained to momentary
- LED offering only for improved brightness quality and up to 100,000 hours of operation
- Laser engraved pushbuttons and lenses
- Pushbuttons (momentary) rated for 5 million mechanical operations
- Pigtail option allows direct machine mounting

Protection Type

- IP67/IP69K
- NEMA 4X, 13
- IP65 rear (pigtail devices)

Catalog Number Selection

Catalog Number Selection is for illustrative purposes only and not to be used to create new catalog numbers.

Non-Illuminated Pushbuttons

C22 - D - G - X1 - K10 - P1

Bezel
C22 = Silver
C22S = Black

Operator Type
D = Flush, momentary
DR = Flush, maintained
DH = Extended, momentary
DRH = Extended, maintained

Button Plate Color
G = Green
R = Red
S = Black
W = White
X = Buttonless

Button Etching
X0 = ◎
X1 = ①

Contact Blocks
K10 = 1NO
K20 = 2NO
K01 = 1NC
K02 = 2NC
K11 = 1NO/1NC

Connector Type
P1 = 0.2 m M12, 4-pole
P3 = 0.5 m M12, 4-pole
P5 = 1.0 m M12, 4-pole
P30 = 0.2 m M8, 4-pole
P31 = 0.5 m M8, 4-pole
P32 = 1.0 m M8, 4-pole
P62 = 1.0 m flying lead
P65 = 3.5 m flying lead

Product Selection

Non-Illuminated Pushbuttons, Flush, Momentary

C22(S)-D-_

Non-Illuminated Pushbuttons, Flush, Momentary

Button Color	Button Etching	Contact Block Configuration	Silver Bezel Catalog Number	Black Bezel Catalog Number
Green	—	1NO	**C22-D-G-K10**	**C22S-D-G-K10**
	—	2NO	**C22-D-G-K20**	**C22S-D-G-K20**
	—	1NO/1NC	**C22-D-G-K11**	**C22S-D-G-K11**
	X1	1NO	**C22-D-G-X1-K10**	**C22S-D-G-X1-K10**
	X1	2NO	**C22-D-G-X1-K20**	**C22S-D-G-X1-K20**
	X1	1NO/1NC	**C22-D-G-X1-K11**	**C22S-D-G-X1-K11**
Red	—	1NC	**C22-D-R-K01**	**C22S-D-R-K01**
	—	2NC	**C22-D-R-K02**	**C22S-D-R-K02**
	—	1NO/1NC	**C22-D-R-K11**	**C22S-D-R-K11**
	X0	1NC	**C22-D-R-X0-K01**	**C22S-D-R-X0-K01**
	X0	2NC	**C22-D-R-X0-K02**	**C22S-D-R-X0-K02**
	X0	1NO/1NC	**C22-D-R-X0-K11**	**C22S-D-R-X0-K11**
Black	—	1NC	**C22-D-S-K01**	**C22S-D-S-K01**
	—	2NC	**C22-D-S-K02**	**C22S-D-S-K02**
	—	1NO/1NC	**C22-D-S-K11**	**C22S-D-S-K11**
	X0	1NC	**C22-D-S-X0-K01**	**C22S-D-S-X0-K01**
	X0	2NC	**C22-D-S-X0-K02**	**C22S-D-S-X0-K02**
	X0	1NO/1NC	**C22-D-S-X0-K11**	**C22S-D-S-X0-K11**
White	—	1NO	**C22-D-W-K10**	**C22S-D-W-K10**
	—	2NO	**C22-D-W-K20**	**C22S-D-W-K20**
	—	1NO/1NC	**C22-D-W-K11**	**C22S-D-W-K11**
	X1	1NO	**C22-D-W-X1-K10**	**C22S-D-W-X1-K10**
	X1	2NO	**C22-D-W-X1-K20**	**C22S-D-W-X1-K20**
	X1	1NO/1NC	**C22-D-W-X1-K11**	**C22S-D-W-X1-K11**
Buttonless	—	1NO	**C22-D-X-K10**	**C22S-D-X-K10**
	—	2NO	**C22-D-X-K20**	**C22S-D-X-K20**
	—	1NC	**C22-D-X-K01**	**C22S-D-X-K01**
	—	2NC	**C22-D-X-K02**	**C22S-D-X-K02**
	—	1NO/1NC	**C22-D-X-K11**	**C22S-D-X-K11**

1

Non-Illuminated Pushbuttons, Flush, Momentary, with Pigtail

C22-D-_

Non-Illuminated Pushbuttons, Flush, Momentary, with Pigtail

Button Color	Contacts	Connector Length	Connector Type	Silver Bezel Catalog Number
Green	1NO	0.2	M8	**C22-D-G-K10-P30**
	1NO	0.2	M12	**C22-D-G-K10-P1**
	1NO	0.5	M8	**C22-D-G-K10-P31**
	1NO	0.5	M12	**C22-D-G-K10-P3**
	1NO	1	M8	**C22-D-G-K10-P32**
	1NO	1	M12	**C22-D-G-K10-P5**
	1NO	1	Flying lead	**C22-D-G-K10-P62**
	1NO	3.5	Flying lead	**C22-D-G-K10-P65**
Red	1NC	0.2	M8	**C22-D-R-K01-P30**
	1NC	0.2	M12	**C22-D-R-K01-P1**
	1NC	0.5	M8	**C22-D-R-K01-P31**
	1NC	0.5	M12	**C22-D-R-K01-P3**
	1NC	1	M8	**C22-D-R-K01-P32**
	1NC	1	M12	**C22-D-R-K01-P5**
	1NC	1	Flying lead	**C22-D-R-K01-P62**
	1NC	3.5	Flying lead	**C22-D-R-K01-P65**
Black	1NC	0.2	M8	**C22-D-S-K01-P30**
	1NC	0.2	M12	**C22-D-S-K01-P1**
	1NC	0.5	M8	**C22-D-S-K01-P31**
	1NC	0.5	M12	**C22-D-S-K01-P3**
	1NC	1	M8	**C22-D-S-K01-P32**
	1NC	1	M12	**C22-D-S-K01-P5**
	1NC	1	Flying lead	**C22-D-S-K01-P62**
	1NC	3.5	Flying lead	**C22-D-S-K01-P65**
White	1NO	0.2	M8	**C22-D-W-K10-P30**
	1NO	0.2	M12	**C22-D-W-K10-P1**
	1NO	0.5	M8	**C22-D-W-K10-P31**
	1NO	0.5	M12	**C22-D-W-K10-P3**
	1NO	1	M8	**C22-D-W-K10-P32**
	1NO	1	M12	**C22-D-W-K10-P5**
	1NO	1	Flying lead	**C22-D-W-K10-P62**
	1NO	3.5	Flying lead	**C22-D-W-K10-P65**
Buttonless	1NO	0.2	M8	**C22-D-X-K10-P30**
	1NO	0.2	M12	**C22-D-X-K10-P1**
	1NO	0.5	M8	**C22-D-X-K10-P31**
	1NO	0.5	M12	**C22-D-X-K10-P3**
	1NO	1	M8	**C22-D-X-K10-P32**
	1NO	1	M12	**C22-D-X-K10-P5**
	1NO	1	Flying lead	**C22-D-X-K10-P62**
	1NO	3.5	Flying lead	**C22-D-X-K10-P65**
	2NO	1	Flying lead	**C22-D-X-K20-P62**
	2NO	3.5	Flying lead	**C22-D-X-K20-P65**
	1NC/1NO	1	Flying lead	**C22-D-X-K11-P62**
	1NC/1NO	3.5	Flying lead	**C22-D-X-K11-P65**
	1NC	0.2	M8	**C22-D-X-K01-P30**
	1NC	0.2	M12	**C22-D-X-K01-P1**
	1NC	0.5	M8	**C22-D-X-K01-P31**
	1NC	0.5	M12	**C22-D-X-K01-P3**
	1NC	1	M8	**C22-D-X-K01-P32**
	1NC	1	M12	**C22-D-X-K01-P5**
	1NC	1	Flying lead	**C22-D-X-K01-P62**
	1NC	3.5	Flying lead	**C22-D-X-K01-P65**
	2NC	1	Flying lead	**C22-D-X-K02-P62**
	2NC	3.5	Flying lead	**C22-D-X-K02-P65**

Non-Illuminated Pushbuttons, Flush, Maintained

C22(S)-DR-_

Non-Illuminated Pushbuttons, Flush, Maintained

Button Color	Button Etching	Contact Block Configuration	Silver Bezel Catalog Number	Black Bezel Catalog Number
Green	—	1NO	**C22-DR-G-K10**	**C22S-DR-G-K10**
	—	2NO	**C22-DR-G-K20**	**C22S-DR-G-K20**
	—	1NO/1NC	**C22-DR-G-K11**	**C22S-DR-G-K11**
	X1	1NO	**C22-DR-G-X1-K10**	**C22S-DR-G-X1-K10**
	X1	2NO	**C22-DR-G-X1-K20**	**C22S-DR-G-X1-K20**
	X1	1NO/1NC	**C22-DR-G-X1-K11**	**C22S-DR-G-X1-K11**
Red	—	1NC	**C22-DR-R-K01**	**C22S-DR-R-K01**
	—	2NC	**C22-DR-R-K02**	**C22S-DR-R-K02**
	—	1NO/1NC	**C22-DR-R-K11**	**C22S-DR-R-K11**
	X0	1NC	**C22-DR-R-X0-K01**	**C22S-DR-R-X0-K01**
	X0	2NC	**C22-DR-R-X0-K02**	**C22S-DR-R-X0-K02**
	X0	1NO/1NC	**C22-DR-R-X0-K11**	**C22S-DR-R-X0-K11**
Black	—	1NC	**C22-DR-S-K01**	**C22S-DR-S-K01**
	—	2NC	**C22-DR-S-K02**	**C22S-DR-S-K02**
	—	1NO/1NC	**C22-DR-S-K11**	**C22S-DR-S-K11**
	X0	1NC	**C22-DR-S-X0-K01**	**C22S-DR-S-X0-K01**
	X0	2NC	**C22-DR-S-X0-K02**	**C22S-DR-S-X0-K02**
	X0	1NO/1NC	**C22-DR-S-X0-K11**	**C22S-DR-S-X0-K11**
White	—	1NO	**C22-DR-W-K10**	**C22S-DR-W-K10**
	—	2NO	**C22-DR-W-K20**	**C22S-DR-W-K20**
	—	1NO/1NC	**C22-DR-W-K11**	**C22S-DR-W-K11**
	X1	1NO	**C22-DR-W-X1-K10**	**C22S-DR-W-X1-K10**
	X1	2NO	**C22-DR-W-X1-K20**	**C22S-DR-W-X1-K20**
	X1	1NO/1NC	**C22-DR-W-X1-K11**	**C22S-DR-W-X1-K11**
Buttonless	—	1NO	**C22-DR-X-K10**	**C22S-DR-X-K10**
	—	2NO	**C22-DR-X-K20**	**C22S-DR-X-K20**
	—	1NC	**C22-DR-X-K01**	**C22S-DR-X-K01**
	—	2NC	**C22-DR-X-K02**	**C22S-DR-X-K02**
	—	1NO/1NC	**C22-DR-X-K11**	**C22S-DR-X-K11**

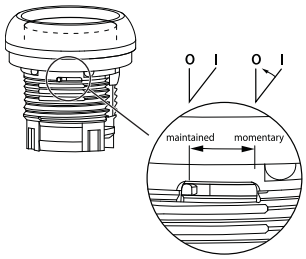

Note: Maintained pushbuttons can be converted in the field to momentary operation by switching the locking ring, which is accessible through the side of the operator body.

1

Non-Illuminated Pushbuttons, Flush, Maintained, with Pigtail

C22-DR-_

Non-Illuminated Pushbuttons, Flush, Maintained, with Pigtail

Button Color	Contacts	Connector Length	Connector Type	Silver Bezel Catalog Number
Green	1NO	0.2	M8	**C22-DR-G-K10-P30**
	1NO	0.2	M12	**C22-DR-G-K10-P1**
	1NO	0.5	M8	**C22-DR-G-K10-P31**
	1NO	0.5	M12	**C22-DR-G-K10-P3**
	1NO	1	M8	**C22-DR-G-K10-P32**
	1NO	1	M12	**C22-DR-G-K10-P5**
	1NO	1	Flying lead	**C22-DR-G-K10-P62**
	1NO	3.5	Flying lead	**C22-DR-G-K10-P65**
Red	1NC	0.2	M8	**C22-DR-R-K01-P30**
	1NC	0.2	M12	**C22-DR-R-K01-P1**
	1NC	0.5	M8	**C22-DR-R-K01-P31**
	1NC	0.5	M12	**C22-DR-R-K01-P3**
	1NC	1	M8	**C22-DR-R-K01-P32**
	1NC	1	M12	**C22-DR-R-K01-P5**
	1NC	1	Flying lead	**C22-DR-R-K01-P62**
	1NC	3.5	Flying lead	**C22-DR-R-K01-P65**
Black	1NC	0.2	M8	**C22-DR-S-K01-P30**
	1NC	0.2	M12	**C22-DR-S-K01-P1**
	1NC	0.5	M8	**C22-DR-S-K01-P31**
	1NC	0.5	M12	**C22-DR-S-K01-P3**
	1NC	1	M8	**C22-DR-S-K01-P32**
	1NC	1	M12	**C22-DR-S-K01-P5**
	1NC	1	Flying lead	**C22-DR-S-K01-P62**
	1NC	3.5	Flying lead	**C22-DR-S-K01-P65**
White	1NO	0.2	M8	**C22-DR-W-K10-P30**
	1NO	0.2	M12	**C22-DR-W-K10-P1**
	1NO	0.5	M8	**C22-DR-W-K10-P31**
	1NO	0.5	M12	**C22-DR-W-K10-P3**
	1NO	1	M8	**C22-DR-W-K10-P32**
	1NO	1	M12	**C22-DR-W-K10-P5**
	1NO	1	Flying lead	**C22-DR-W-K10-P62**
	1NO	3.5	Flying lead	**C22-DR-W-K10-P65**
Buttonless	1NO	0.2	M8	**C22-DR-X-K10-P30**
	1NO	0.2	M12	**C22-DR-X-K10-P1**
	1NO	0.5	M8	**C22-DR-X-K10-P31**
	1NO	0.5	M12	**C22-DR-X-K10-P3**
	1NO	1	M8	**C22-DR-X-K10-P32**
	1NO	1	M12	**C22-DR-X-K10-P5**
	1NO	1	Flying lead	**C22-DR-X-K10-P62**
	1NO	3.5	Flying lead	**C22-DR-X-K10-P65**
	2NO	1	Flying lead	**C22-DR-X-K20-P62**
	2NO	3.5	Flying lead	**C22-DR-X-K20-P65**
	1NC/1NO	1	Flying lead	**C22-DR-X-K11-P62**
	1NC/1NO	3.5	Flying lead	**C22-DR-X-K11-P65**
	1NC	0.2	M8	**C22-DR-X-K01-P30**
	1NC	0.2	M12	**C22-DR-X-K01-P1**
	1NC	0.5	M8	**C22-DR-X-K01-P31**
	1NC	0.5	M12	**C22-DR-X-K01-P3**
	1NC	1	M8	**C22-DR-X-K01-P32**
	1NC	1	M12	**C22-DR-X-K01-P5**
	1NC	1	Flying lead	**C22-DR-X-K01-P62**
	1NC	3.5	Flying lead	**C22-DR-X-K01-P65**
	2NC	1	Flying lead	**C22-DR-X-K02-P62**
	2NC	3.5	Flying lead	**C22-DR-X-K02-P65**

Non-Illuminated Pushbuttons, Extended, Momentary

C22(S)-DH-_

Non-Illuminated Pushbuttons, Extended, Momentary

Button Color	Button Etching	Contact Block Configuration	Silver Bezel Catalog Number	Black Bezel Catalog Number
Green	—	1NO	**C22-DH-G-K10**	**C22S-DH-G-K10**
	—	2NO	**C22-DH-G-K20**	**C22S-DH-G-K20**
	—	1NO/1NC	**C22-DH-G-K11**	**C22S-DH-G-K11**
	X1	1NO	**C22-DH-G-X1-K10**	**C22S-DH-G-X1-K10**
	X1	2NO	**C22-DH-G-X1-K20**	**C22S-DH-G-X1-K20**
	X1	1NO/1NC	**C22-DH-G-X1-K11**	**C22S-DH-G-X1-K11**
Red	—	1NC	**C22-DH-R-K01**	**C22S-DH-R-K01**
	—	2NC	**C22-DH-R-K02**	**C22S-DH-R-K02**
	—	1NO/1NC	**C22-DH-R-K11**	**C22S-DH-R-K11**
	X0	1NC	**C22-DH-R-X0-K01**	**C22S-DH-R-X0-K01**
	X0	2NC	**C22-DH-R-X0-K02**	**C22S-DH-R-X0-K02**
	X0	1NO/1NC	**C22-DH-R-X0-K11**	**C22S-DH-R-X0-K11**
Black	—	1NC	**C22-DH-S-K01**	**C22S-DH-S-K01**
	—	2NC	**C22-DH-S-K02**	**C22S-DH-S-K02**
	—	1NO/1NC	**C22-DH-S-K11**	**C22S-DH-S-K11**
	X0	1NC	**C22-DH-S-X0-K01**	**C22S-DH-S-X0-K01**
	X0	2NC	**C22-DH-S-X0-K02**	**C22S-DH-S-X0-K02**
	X0	1NO/1NC	**C22-DH-S-X0-K11**	**C22S-DH-S-X0-K11**
White	—	1NO	**C22-DH-W-K10**	**C22S-DH-W-K10**
	—	2NO	**C22-DH-W-K20**	**C22S-DH-W-K20**
	—	1NO/1NC	**C22-DH-W-K11**	**C22S-DH-W-K11**
	X1	1NO	**C22-DH-W-X1-K10**	**C22S-DH-W-X1-K10**
	X1	2NO	**C22-DH-W-X1-K20**	**C22S-DH-W-X1-K20**
	X1	1NO/1NC	**C22-DH-W-X1-K11**	**C22S-DH-W-X1-K11**

1

Non-Illuminated Pushbuttons, Extended, Maintained

C22(S)-DRH-_

Non-Illuminated Pushbuttons, Extended, Maintained

Button Color	Button Etching	Contact Block Configuration	Silver Bezel Catalog Number	Black Bezel Catalog Number
Green	—	1NO	**C22-DRH-G-K10**	**C22S-DRH-G-K10**
	—	2NO	**C22-DRH-G-K20**	**C22S-DRH-G-K20**
	—	1NO/1NC	**C22-DRH-G-K11**	**C22S-DRH-G-K11**
	X1	1NO	**C22-DRH-G-X1-K10**	**C22S-DRH-G-X1-K10**
	X1	2NO	**C22-DRH-G-X1-K20**	**C22S-DRH-G-X1-K20**
	X1	1NO/1NC	**C22-DRH-G-X1-K11**	**C22S-DRH-G-X1-K11**
Red	—	1NC	**C22-DRH-R-K01**	**C22S-DRH-R-K01**
	—	2NC	**C22-DRH-R-K02**	**C22S-DRH-R-K02**
	—	1NO/1NC	**C22-DRH-R-K11**	**C22S-DRH-R-K11**
	X0	1NC	**C22-DRH-R-X0-K01**	**C22S-DRH-R-X0-K01**
	X0	2NC	**C22-DRH-R-X0-K02**	**C22S-DRH-R-X0-K02**
	X0	1NO/1NC	**C22-DRH-R-X0-K11**	**C22S-DRH-R-X0-K11**
Black	—	1NC	**C22-DRH-S-K01**	**C22S-DRH-S-K01**
	—	2NC	**C22-DRH-S-K02**	**C22S-DRH-S-K02**
	—	1NO/1NC	**C22-DRH-S-K11**	**C22S-DRH-S-K11**
	X0	1NC	**C22-DRH-S-X0-K01**	**C22S-DRH-S-X0-K01**
	X0	2NC	**C22-DRH-S-X0-K02**	**C22S-DRH-S-X0-K02**
	X0	1NO/1NC	**C22-DRH-S-X0-K11**	**C22S-DRH-S-X0-K11**
White	—	1NO	**C22-DRH-W-K10**	**C22S-DRH-W-K10**
	—	2NO	**C22-DRH-W-K20**	**C22S-DRH-W-K20**
	—	1NO/1NC	**C22-DRH-W-K11**	**C22S-DRH-W-K11**
	X1	1NO	**C22-DRH-W-X1-K10**	**C22S-DRH-W-X1-K10**
	X1	2NO	**C22-DRH-W-X1-K20**	**C22S-DRH-W-X1-K20**
	X1	1NO/1NC	**C22-DRH-W-X1-K11**	**C22S-DRH-W-X1-K11**

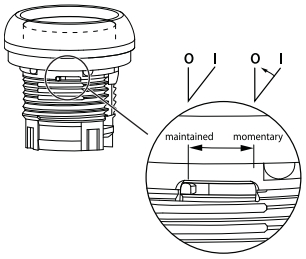

Note: Maintained pushbuttons can be converted in the field to momentary operation by switching the locking ring, which is accessible through the side of the operator body.

Catalog Number Selection

Catalog Number Selection is for illustrative purposes only and not to be used to create new catalog numbers.

Illuminated Pushbuttons

C22 - DL - G - X1 - K10 - 24 - P1

Bezel
C22 = Silver
C22S = Black

Operator Type
DL = Illuminated, flush, momentary
DRL = Illuminated, flush, maintained
DLH = Illuminated, extended, momentary
DRLH = Illuminated, extended, maintained

LED/Lens Color
G = Green
R = Red
W = White
B = Blue
XG = Green without lens
XR = Red without lens
XW = White without lens
XB = Blue without lens

Lens Etching
X0 = ◎
X1 = ⓘ

Contact Blocks
K10 = 1NO
K01 = 1NC

LED Voltage
24 = 24 Vac/Vdc
120 = 120 Vac
230 = 230 Vac

Connector Type
P1 = 0.2 m M12, 4-pole
P3 = 0.5 m M12, 4-pole
P5 = 1.0 m M12, 4-pole
P30 = 0.2 m M8, 4-pole
P31 = 0.5 m M8, 4-pole
P32 = 1.0 m M8, 4-pole
P62 = 1.0 m flying lead
P65 = 3.5 m flying lead

Product Selection

Illuminated, Flush, Momentary

C22(S)-DL-_

Illuminated Pushbuttons, Flush, Momentary

LED Color	Button Color	Voltage	Button Etching	Contact Block Configuration	Silver Bezel Catalog Number	Black Bezel Catalog Number
Green	Green	24 Vac/Vdc	—	1NO	**C22-DL-G-K10-24**	**C22S-DL-G-K10-24**
		120 Vac	—	1NO	**C22-DL-G-K10-120**	**C22S-DL-G-K10-120**
		230 Vac	—	1NO	**C22-DL-G-K10-230**	**C22S-DL-G-K10-230**
		24 Vac/Vdc	X1	1NO	**C22-DL-G-X1-K10-24**	**C22S-DL-G-X1-K10-24**
		120 Vac	X1	1NO	**C22-DL-G-X1-K10-120**	**C22S-DL-G-X1-K10-120**
		230 Vac	X1	1NO	**C22-DL-G-X1-K10-230**	**C22S-DL-G-X1-K10-230**
	Buttonless	24 Vac/Vdc	—	1NO	**C22-DL-XG-K10-24**	**C22S-DL-XG-K10-24**
		120 Vac	—	1NO	**C22-DL-XG-K10-120**	**C22S-DL-XG-K10-120**
		230 Vac	—	1NO	**C22-DL-XG-K10-230**	**C22S-DL-XG-K10-230**
Red	Red	24 Vac/Vdc	—	1NC	**C22-DL-R-K01-24**	**C22S-DL-R-K01-24**
		120 Vac	—	1NC	**C22-DL-R-K01-120**	**C22S-DL-R-K01-120**
		230 Vac	—	1NC	**C22-DL-R-K01-230**	**C22S-DL-R-K01-230**
		24 Vac/Vdc	X0	1NC	**C22-DL-R-X0-K01-24**	**C22S-DL-R-X0-K01-24**
		120 Vac	X0	1NC	**C22-DL-R-X0-K01-120**	**C22S-DL-R-X0-K01-120**
		230 Vac	X0	1NC	**C22-DL-R-X0-K01-230**	**C22S-DL-R-X0-K01-230**
	Buttonless	24 Vac/Vdc	—	1NC	**C22-DL-XR-K01-24**	**C22S-DL-XR-K01-24**
		120 Vac	—	1NC	**C22-DL-XR-K01-120**	**C22S-DL-XR-K01-120**
		230 Vac	—	1NC	**C22-DL-XR-K01-230**	**C22S-DL-XR-K01-230**
White	White	24 Vac/Vdc	—	1NO	**C22-DL-W-K10-24**	**C22S-DL-W-K10-24**
		120 Vac	—	1NO	**C22-DL-W-K10-120**	**C22S-DL-W-K10-120**
		230 Vac	—	1NO	**C22-DL-W-K10-230**	**C22S-DL-W-K10-230**
		24 Vac/Vdc	X1	1NO	**C22-DL-W-X1-K10-24**	**C22S-DL-W-X1-K10-24**
		120 Vac	X1	1NO	**C22-DL-W-X1-K10-120**	**C22S-DL-W-X1-K10-120**
		230 Vac	X1	1NO	**C22-DL-W-X1-K10-230**	**C22S-DL-W-X1-K10-230**
	Buttonless	24 Vac/Vdc	—	1NO	**C22-DL-XW-K10-24**	**C22S-DL-XW-K10-24**
		120 Vac	—	1NO	**C22-DL-XW-K10-120**	**C22S-DL-XW-K10-120**
		230 Vac	—	1NO	**C22-DL-XW-K10-230**	**C22S-DL-XW-K10-230**
Blue	Blue	24 Vac/Vdc	—	1NO	**C22-DL-B-K10-24**	**C22S-DL-B-K10-24**
		120 Vac	—	1NO	**C22-DL-B-K10-120**	**C22S-DL-B-K10-120**
		230 Vac	—	1NO	**C22-DL-B-K10-230**	**C22S-DL-B-K10-230**
	Buttonless	24 Vac/Vdc	—	1NO	**C22-DL-XB-K10-24**	**C22S-DL-XB-K10-24**
		120 Vac	—	1NO	**C22-DL-XB-K10-120**	**C22S-DL-XB-K10-120**
		230 Vac	—	1NO	**C22-DL-XB-K10-230**	**C22S-DL-XB-K10-230**

1

Illuminated Pushbuttons, Flush, Momentary, with Pigtail

C22-DL-_

Illuminated Pushbuttons, Flush, Momentary, with Pigtail

Button Color	Contacts	Connector Length	Connector Type	Silver Bezel Catalog Number
Green	1NO	0.2	M8	**C22-DL-G-K10-24-P30**
	1NO	0.2	M12	**C22-DL-G-K10-24-P1**
	1NO	0.5	M8	**C22-DL-G-K10-24-P31**
	1NO	0.5	M12	**C22-DL-G-K10-24-P3**
	1NO	1	M8	**C22-DL-G-K10-24-P32**
	1NO	1	M12	**C22-DL-G-K10-24-P5**
	1NO	1	Flying lead	**C22-DL-G-K10-24-P62**
	1NO	3.5	Flying lead	**C22-DL-G-K10-24-P65**
Red	1NC	0.2	M8	**C22-DL-R-K01-24-P30**
	1NC	0.2	M12	**C22-DL-R-K01-24-P1**
	1NC	0.5	M8	**C22-DL-R-K01-24-P31**
	1NC	0.5	M12	**C22-DL-R-K01-24-P3**
	1NC	1	M8	**C22-DL-R-K01-24-P32**
	1NC	1	M12	**C22-DL-R-K01-24-P5**
	1NC	1	Flying lead	**C22-DL-R-K01-24-P62**
	1NC	3.5	Flying lead	**C22-DL-R-K01-24-P65**
Blue	1NO	0.2	M8	**C22-DL-B-K10-24-P30**
	1NO	0.2	M12	**C22-DL-B-K10-24-P1**
	1NO	0.5	M8	**C22-DL-B-K10-24-P31**
	1NO	0.5	M12	**C22-DL-B-K10-24-P3**
	1NO	1	M8	**C22-DL-B-K10-24-P32**
	1NO	1	M12	**C22-DL-B-K10-24-P5**
	1NO	1	Flying lead	**C22-DL-B-K10-24-P62**
	1NO	3.5	Flying lead	**C22-DL-B-K10-24-P65**
White	1NO	0.2	M8	**C22-DL-W-K10-24-P30**
	1NO	0.2	M12	**C22-DL-W-K10-24-P1**
	1NO	0.5	M8	**C22-DL-W-K10-24-P31**
	1NO	0.5	M12	**C22-DL-W-K10-24-P3**
	1NO	1	M8	**C22-DL-W-K10-24-P32**
	1NO	1	M12	**C22-DL-W-K10-24-P5**
	1NO	1	Flying lead	**C22-DL-W-K10-24-P62**
	1NO	3.5	Flying lead	**C22-DL-W-K10-24-P65**

Illuminated Pushbuttons, Flush, Maintained

C22(S)-DRL-_

Illuminated Pushbuttons, Flush, Maintained

LED Color	Button Color	Voltage	Contact Block Configuration	Silver Bezel Catalog Number	Black Bezel Catalog Number
Green	Green	24 Vac/Vdc	1NO	**C22-DRL-G-K10-24**	**C22S-DRL-G-K10-24**
		120 Vac	1NO	**C22-DRL-G-K10-120**	**C22S-DRL-G-K10-120**
		230 Vac	1NO	**C22-DRL-G-K10-230**	**C22S-DRL-G-K10-230**
	Buttonless	24 Vac/Vdc	1NO	**C22-DRL-XG-K10-24**	**C22S-DRL-XG-K10-24**
		120 Vac	1NO	**C22-DRL-XG-K10-120**	**C22S-DRL-XG-K10-120**
		230 Vac	1NO	**C22-DRL-XG-K10-230**	**C22S-DRL-XG-K10-230**
Red	Red	24 Vac/Vdc	1NC	**C22-DRL-R-K01-24**	**C22S-DRL-R-K01-24**
		120 Vac	1NC	**C22-DRL-R-K01-120**	**C22S-DRL-R-K01-120**
		230 Vac	1NC	**C22-DRL-R-K01-230**	**C22S-DRL-R-K01-230**
	Buttonless	24 Vac/Vdc	1NC	**C22-DRL-XR-K01-24**	**C22S-DRL-XR-K01-24**
		120 Vac	1NC	**C22-DRL-XR-K01-120**	**C22S-DRL-XR-K01-120**
		230 Vac	1NC	**C22-DRL-XR-K01-230**	**C22S-DRL-XR-K01-230**
White	White	24 Vac/Vdc	1NO	**C22-DRL-W-K10-24**	**C22S-DRL-W-K10-24**
		120 Vac	1NO	**C22-DRL-W-K10-120**	**C22S-DRL-W-K10-120**
		230 Vac	1NO	**C22-DRL-W-K10-230**	**C22S-DRL-W-K10-230**
	Buttonless	24 Vac/Vdc	1NO	**C22-DRL-XW-K10-24**	**C22S-DRL-XW-K10-24**
		120 Vac	1NO	**C22-DRL-XW-K10-120**	**C22S-DRL-XW-K10-120**
		230 Vac	1NO	**C22-DRL-XW-K10-230**	**C22S-DRL-XW-K10-230**
Blue	Blue	24 Vac/Vdc	1NO	**C22-DRL-B-K10-24**	**C22S-DRL-B-K10-24**
		120 Vac	1NO	**C22-DRL-B-K10-120**	**C22S-DRL-B-K10-120**
		230 Vac	1NO	**C22-DRL-B-K10-230**	**C22S-DRL-B-K10-230**
	Buttonless	24 Vac/Vdc	1NO	**C22-DRL-XB-K10-24**	**C22S-DRL-XB-K10-24**
		120 Vac	1NO	**C22-DRL-XB-K10-120**	**C22S-DRL-XB-K10-120**
		230 Vac	1NO	**C22-DRL-XB-K10-230**	**C22S-DRL-XB-K10-230**

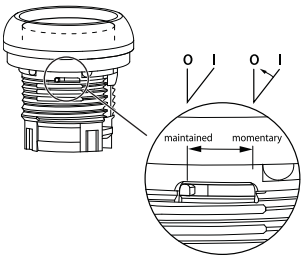

Note: Maintained pushbuttons can be converted in the field to momentary operation by switching the locking ring, which is accessible through the side of the operator body.

1

Illuminated Pushbuttons, Flush, Maintained, with Pigtail

C22_DRL-G-_

Illuminated Pushbuttons, Flush, Maintained, with Pigtail

Button Color	Contacts	Connector Length	Connector Type	Silver Bezel Catalog Number
Green	1NO	0.2	M8	**C22-DRL-G-K10-24-P30**
	1NO	0.2	M12	**C22-DRL-G-K10-24-P1**
	1NO	0.5	M8	**C22-DRL-G-K10-24-P31**
	1NO	0.5	M12	**C22-DRL-G-K10-24-P3**
	1NO	1	M8	**C22-DRL-G-K10-24-P32**
	1NO	1	M12	**C22-DRL-G-K10-24-P5**
	1NO	1	Flying lead	**C22-DRL-G-K10-24-P62**
	1NO	3.5	Flying lead	**C22-DRL-G-K10-24-P65**
Red	1NC	0.2	M8	**C22-DRL-R-K01-24-P30**
	1NC	0.2	M12	**C22-DRL-R-K01-24-P1**
	1NC	0.5	M8	**C22-DRL-R-K01-24-P31**
	1NC	0.5	M12	**C22-DRL-R-K01-24-P3**
	1NC	1	M8	**C22-DRL-R-K01-24-P32**
	1NC	1	M12	**C22-DRL-R-K01-24-P5**
	1NC	1	Flying lead	**C22-DRL-R-K01-24-P62**
	1NC	3.5	Flying lead	**C22-DRL-R-K01-24-P65**
Blue	1NO	0.2	M8	**C22-DRL-B-K10-24-P30**
	1NO	0.2	M12	**C22-DRL-B-K10-24-P1**
	1NO	0.5	M8	**C22-DRL-B-K10-24-P31**
	1NO	0.5	M12	**C22-DRL-B-K10-24-P3**
	1NO	1	M8	**C22-DRL-B-K10-24-P32**
	1NO	1	M12	**C22-DRL-B-K10-24-P5**
	1NO	1	Flying lead	**C22-DRL-B-K10-24-P62**
	1NO	3.5	Flying lead	**C22-DRL-B-K10-24-P65**
White	1NO	0.2	M8	**C22-DRL-W-K10-24-P30**
	1NO	0.2	M12	**C22-DRL-W-K10-24-P1**
	1NO	0.5	M8	**C22-DRL-W-K10-24-P31**
	1NO	0.5	M12	**C22-DRL-W-K10-24-P3**
	1NO	1	M8	**C22-DRL-W-K10-24-P32**
	1NO	1	M12	**C22-DRL-W-K10-24-P5**
	1NO	1	Flying lead	**C22-DRL-W-K10-24-P62**
	1NO	3.5	Flying lead	**C22-DRL-W-K10-24-P65**

Illuminated Pushbuttons, Extended, Momentary

C22(S)-DLH-_

Illuminated Pushbuttons, Extended, Momentary

LED Color	Button Color	Voltage	Button Etching	Contact Block Configuration	Silver Bezel Catalog Number	Black Bezel Catalog Number
Green	Green	24 Vac/Vdc	—	1NO	**C22-DLH-G-K10-24**	**C22S-DLH-G-K10-24**
		120 Vac	—	1NO	**C22-DLH-G-K10-120**	**C22S-DLH-G-K10-120**
		230 Vac	—	1NO	**C22-DLH-G-K10-230**	**C22S-DLH-G-K10-230**
		24 Vac/Vdc	X1	1NO	**C22-DLH-G-X1-K10-24**	**C22S-DLH-G-X1-K10-24**
		120 Vac	X1	1NO	**C22-DLH-G-X1-K10-120**	**C22S-DLH-G-X1-K10-12**
		230 Vac	X1	1NO	**C22-DLH-G-X1-K10-230**	**C22S-DLH-G-X1-K10-23**
Red	Red	24 Vac/Vdc	—	1NC	**C22-DLH-R-K01-24**	**C22S-DLH-R-K01-24**
		120 Vac	—	1NC	**C22-DLH-R-K01-120**	**C22S-DLH-R-K01-120**
		230 Vac	—	1NC	**C22-DLH-R-K01-230**	**C22S-DLH-R-K01-230**
		24 Vac/Vdc	X0	1NC	**C22-DLH-R-X0-K01-24**	**C22S-DLH-R-X0-K01-24**
		120 Vac	X0	1NC	**C22-DLH-R-X0-K01-120**	**C22S-DLH-R-X0-K01-12**
		230 Vac	X0	1NC	**C22-DLH-R-X0-K01-230**	**C22S-DLH-R-X0-K01-23**
White	White	24 Vac/Vdc	—	1NO	**C22-DLH-W-K10-24**	**C22S-DLH-W-K10-24**
		120 Vac	—	1NO	**C22-DLH-W-K10-120**	**C22S-DLH-W-K10-120**
		230 Vac	—	1NO	**C22-DLH-W-K10-230**	**C22S-DLH-W-K10-230**
		24 Vac/Vdc	X1	1NO	**C22-DLH-W-X1-K10-24**	**C22S-DLH-W-X1-K10-24**
		120 Vac	X1	1NO	**C22-DLH-W-X1-K10-120**	**C22S-DLH-W-X1-K10-12**
		230 Vac	X1	1NO	**C22-DLH-W-X1-K10-230**	**C22S-DLH-W-X1-K10-23**
Blue	Blue	24 Vac/Vdc	—	1NO	**C22-DLH-B-K10-24**	**C22S-DLH-B-K10-24**
		120 Vac	—	1NO	**C22-DLH-B-K10-120**	**C22S-DLH-B-K10-120**
		230 Vac	—	1NO	**C22-DLH-B-K10-230**	**C22S-DLH-B-K10-230**

1

Illuminated Pushbuttons, Extended, Maintained

C22(S)-DRLH-_

Illuminated Pushbuttons, Flush Extended, Maintained

LED Color	Button Color	Voltage	Button Etching	Contact Block Configuration	Silver Bezel Catalog Number	Black Bezel Catalog Number
Green	Green	24 Vac/Vdc	—	1NO	**C22-DRLH-G-K10-24**	**C22S-DRLH-G-K10-24**
		120 Vac	—	1NO	**C22-DRLH-G-K10-120**	**C22S-DRLH-G-K10-120**
		230 Vac	—	1NO	**C22-DRLH-G-K10-230**	**C22S-DRLH-G-K10-230**
		24 Vac/Vdc	X1	1NO	**C22-DRLH-G-X1-K10-24**	**C22S-DRLH-G-X1-K10-24**
		120 Vac	X1	1NO	**C22-DRLH-G-X1-K10-120**	**C22S-DRLH-G-X1-K10-120**
		230 Vac	X1	1NO	**C22-DRLH-G-X1-K10-230**	**C22S-DRLH-G-X1-K10-230**
Red	Red	24 Vac/Vdc	—	1NC	**C22-DRLH-R-K01-24**	**C22S-DRLH-R-K01-24**
		120 Vac	—	1NC	**C22-DRLH-R-K01-120**	**C22S-DRLH-R-K01-120**
		230 Vac	—	1NC	**C22-DRLH-R-K01-230**	**C22S-DRLH-R-K01-230**
		24 Vac/Vdc	X0	1NC	**C22-DRLH-R-X0-K01-24**	**C22S-DRLH-R-X0-K01-24**
		120 Vac	X0	1NC	**C22-DRLH-R-X0-K01-120**	**C22S-DRLH-R-X0-K01-120**
		230 Vac	X0	1NC	**C22-DRLH-R-X0-K01-230**	**C22S-DRLH-R-X0-K01-230**
White	White	24 Vac/Vdc	—	1NO	**C22-DRLH-W-K10-24**	**C22S-DRLH-W-K10-24**
		120 Vac	—	1NO	**C22-DRLH-W-K10-120**	**C22S-DRLH-W-K10-120**
		230 Vac	—	1NO	**C22-DRLH-W-K10-230**	**C22S-DRLH-W-K10-230**
		24 Vac/Vdc	X1	1NO	**C22-DRLH-W-X1-K10-24**	**C22S-DRLH-W-X1-K10-24**
		120 Vac	X1	1NO	**C22-DRLH-W-X1-K10-120**	**C22S-DRLH-W-X1-K10-120**
		230 Vac	X1	1NO	**C22-DRLH-W-X1-K10-230**	**C22S-DRLH-W-X1-K10-230**
Blue	Blue	24 Vac/Vdc	—	1NO	**C22-DRLH-B-K10-24**	**C22S-DRLH-B-K10-24**
		120 Vac	—	1NO	**C22-DRLH-B-K10-120**	**C22S-DRLH-B-K10-120**
		230 Vac	—	1NO	**C22-DRLH-B-K10-230**	**C22S-DRLH-B-K10-230**

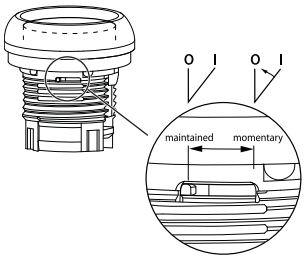

Note: Maintained pushbuttons can be converted in the field to momentary operation by switching the locking ring, which is accessible through the side of the operator body.

Indicating Lights

Contents

Description	*Page*
Pushbuttons—Non-Illuminated and Illuminated	**V7-T1-134**
Indicating Lights	
Catalog Number Selection	**V7-T1-148**
Product Selection	**V7-T1-148**
Emergency Stops	**V7-T1-150**
Selector Switches	**V7-T1-153**
Technical Data and Specifications	**V7-T1-160**
Dimensions	**V7-T1-162**

Indicating Lights

Product Description

C22 indicating lights use a combination of a durable, bright LED unit and modern lenses designed specifically for this type of LED to create a bright and visible indicating light. As with the pushbuttons, the indicating light lenses can be laser etched, simply order without lens and order M22/C22 custom etched lenses to attach.

Indicating lights with pigtail have options for M12, M8, or flying lead connectors, providing high degree of protection options.

Note: For additional accessories, please see **Pages V7-T1-105** to **V7-T1-111**, 22.5 mm Modular Pushbuttons—M22 Accessories.

Features

- LED offering only for improved brightness quality and up to 100,000 hours of operation
- Lenses specifically designed for LED illumination
- Lenses capable of being laser etched for custom solutions that last
- Units with pigtail allow for direct machine mounting with high degree of protection backside

Protection Type

- IP67/IP69K
- NEMA 4X, 13
- IP65 rear rating with pigtail

1

Catalog Number Selection

Catalog Number Selection is for illustrative purposes only and not to be used to create new catalog numbers.

Indicating Lights

C22 - L - G - 24 - P1

Bezel
C22-L = Flush indicating light

LED/Lens Color
G = Green
R = Red
W = White
Y = Yellow
B = Blue
XG = Green without lens
XR = Red without lens
XW = White without lens ①
XB = Blue without lens

LED Voltage
24 = 24 Vac/Vdc
120 = 120 Vac
230 = 230 Vac

Connector Type
P1 = 0.2 m M12, 4-pole
P3 = 0.5 m M12, 4-pole
P5 = 1.0 m M12, 4-pole
P30 = 0.2 m M8, 4-pole
P31 = 0.5 m M8, 4-pole
P32 = 1.0 m M8, 4-pole
P62 = 1.0 m flying lead
P65 = 3.5 m flying lead

Product Selection

Indicating Lights

C22-L-_

Indicating Lights

Lens Color	LED Color	Voltage	Catalog Number
Green	Green	24 Vac/Vdc	**C22-L-G-24**
		120 Vac	**C22-L-G-120**
		230 Vac	**C22-L-G-230**
Red	Red	24 Vac/Vdc	**C22-L-R-24**
		120 Vac	**C22-L-R-120**
		230 Vac	**C22-L-R-230**
White	White	24 Vac/Vdc	**C22-L-W-24**
		120 Vac	**C22-L-W-120**
		230 Vac	**C22-L-W-230**
Yellow	White	24 Vac/Vdc	**C22-L-Y-24**
		120 Vac	**C22-L-Y-120**
		230 Vac	**C22-L-Y-230**
Blue	Blue	24 Vac/Vdc	**C22-L-B-24**
		120 Vac	**C22-L-B-120**
		230 Vac	**C22-L-B-230**
Without Lens	Green	24 Vac/Vdc	**C22-L-XG-24**
		120 Vac	**C22-L-XG-120**
		230 Vac	**C22-L-XG-230**
	Red	24 Vac/Vdc	**C22-L-XR-24**
		120 Vac	**C22-L-XR-120**
		230 Vac	**C22-L-XR-230**
	White	24 Vac/Vdc	**C22-L-XW-24**
		120 Vac	**C22-L-XW-120**
		230 Vac	**C22-L-XW-230**
	Blue	24 Vac/Vdc	**C22-L-XB-24**
		120 Vac	**C22-L-XB-120**
		230 Vac	**C22-L-XB-230**

Note

① Use white LED for both white and yellow lenses.

C22 with Pigtail LED Options

C22_L-_

C22 with Pigtail LED Options

24 Vac/Vdc only indicating lights.

Color	Connector Type	0.2 m Catalog Number	0.5 m Catalog Number	1.0 m Catalog Number	3.5 m Catalog Number
Green	M8	**C22-L-G-24-P30**	**C22-L-G-24-P31**	**C22-L-G-24-P32**	—
	M12	**C22-L-G-24-P1**	**C22-L-G-24-P3**	**C22-L-G-24-P5**	—
	Flying lead	—	—	**C22-L-G-24-P62**	**C22-L-G-24-P65**
Red	M8	**C22-L-R-24-P30**	**C22-L-R-24-P31**	**C22-L-R-24-P32**	—
	M12	**C22-L-R-24-P1**	**C22-L-R-24-P3**	**C22-L-R-24-P5**	—
	Flying lead	—	—	**C22-L-R-24-P62**	**C22-L-R-24-P65**
White	M8	**C22-L-W-24-P30**	**C22-L-W-24-P31**	**C22-L-W-24-P32**	—
	M12	**C22-L-W-24-P1**	**C22-L-W-24-P3**	**C22-L-W-24-P5**	—
	Flying lead	—	—	**C22-L-W-24-P62**	**C22-L-W-24-P65**
Yellow	M8	**C22-L-Y-24-P30**	**C22-L-Y-24-P31**	**C22-L-Y-24-P32**	—
	M12	**C22-L-Y-24-P1**	**C22-L-Y-24-P3**	**C22-L-Y-24-P5**	—
	Flying lead	—	—	**C22-L-Y-24-P62**	**C22-L-Y-24-P65**
Blue	M8	**C22-L-B-24-P30**	**C22-L-B-24-P31**	**C22-L-B-24-P32**	—
	M12	**C22-L-B-24-P1**	**C22-L-B-24-P3**	**C22-L-B-24-P5**	—
	Flying lead	—	—	**C22-L-B-24-P62**	**C22-L-B-24-P65**

Emergency Stops

Contents

Description	*Page*
Pushbuttons—Non-Illuminated and Illuminated	**V7-T1-134**
Indicating Lights	**V7-T1-147**
Emergency Stops	
Non-Illuminated, Twist-Release	**V7-T1-151**
Non-Illuminated, Keyed-Release	**V7-T1-151**
Selector Switches	**V7-T1-153**
Technical Data and Specifications	**V7-T1-160**
Dimensions	**V7-T1-162**

Emergency Stops

Product Description

C22 emergency stops are a durable and reliable solution to a variety of e-stop applications. This compact e-stop, available as twist-to-release and keyed-release, is a simple product that eliminates the need for self-monitoring contact blocks, all while still meeting almost all of the industry safety standards.

E-stops with pigtails allow for direct machine mounting, eliminating the need for an enclosure with high degree of rear protection. Flying leads also allow for quick termination to nearby controls or functional safety devices.

Note: For additional accessories, please see **Pages V7-T1-105** to **V7-T1-111**, 22.5 mm Modular Pushbuttons—M22 Accessories.

Features

- Available in push-pull, twist-release, twist-release with indicator, and key release 38 mm through 60 mm operators
- Available with M12 or flying lead pigtails, allowing direct machine mounting and easy reliable connections
- Meet functional safety requirements for E-stops

Protection Type

- Twist-Release
  - IP67/IP69K
- Keyed-Release
  - IP66
- NEMA 4X, 13
- With pigtail
  - IP65 rear rating

Catalog Number Selection

Catalog Number Selection is for illustrative purposes only and not to be used to create new catalog numbers.

Emergency Stops

C22 - PVS45P - MS1 - K01 - P10

Operator Type
PVT45P = Twist-release, 45 mm
PVT60P = Twist-release, 60 mm
PVS45P = Key-release, 45 mm
PVS60P = Key-release, 60 mm

Key Code
MS1 = MS1
MS2 = MS2
MS3 = MS3
MS4 = MS4
MS5 = MS5
MS6 = MS6
MS7 = MS7
MS8 = MS8
RS = Ronis-445

Contact Blocks
K02 = 2NC
K11 = 1NO/1NC

Connector Type
P10 = 0.2 m M12, 5-pole
P62 = 1.0 m flying lead
P65 = 3.5 m flying lead

Product Selection

Non-Illuminated, Twist-Release

C22-PVT_

Non-Illuminated Emergency Stops, Twist-Release

Release Method	Operator Size	Contact Block Configuration	Catalog Number
Twist-release	45 mm	2NC	**C22-PVT45P-K02**
		1NO/1NC	**C22-PVT45P-K11**
	60 mm	2NC	**C22-PVT60P-K02**
		1NO/1NC	**C22-PVT60P-K11**

Non-Illuminated, Keyed-Release

C22-PVS_

Non-Illuminated Emergency Stops, Keyed-Release

Release Method	Operator Size	Key Code	Contact Block Configuration	Catalog Number
Keyed-release	45 mm	MS1	2NC	**C22-PVS45P-MS1-K02**
			1NO/1NC	**C22-PVS45P-MS1-K11**
		MS2	2NC	**C22-PVS45P-MS2-K02**
			1NO/1NC	**C22-PVS45P-MS2-K11**
		MS3	2NC	**C22-PVS45P-MS3-K02**
			1NO/1NC	**C22-PVS45P-MS3-K11**
		MS4	2NC	**C22-PVS45P-MS4-K02**
			1NO/1NC	**C22-PVS45P-MS4-K11**
		MS5	2NC	**C22-PVS45P-MS5-K02**
			1NO/1NC	**C22-PVS45P-MS5-K11**
		MS6	2NC	**C22-PVS45P-MS6-K02**
			1NO/1NC	**C22-PVS45P-MS6-K11**
		MS7	2NC	**C22-PVS45P-MS7-K02**
			1NO/1NC	**C22-PVS45P-MS7-K11**
		MS8	2NC	**C22-PVS45P-MS8-K02**
			1NO/1NC	**C22-PVS45P-MS8-K11**
		Ronis	2NC	**C22-PVS45P-RS-K02**
			1NO/1NC	**C22-PVS45P-RS-K11**

Note: ⊖ = Safety function implemented with positive opening as defined in IEC/EN 60947-5-1.

C22-PVS_

Non-Illuminated Emergency Stops, Keyed-Release, continued

Release Method	Operator Size	Key Code	Contact Block Configuration	Catalog Number
Keyed-release	60 mm	MS1	2NC	**C22-PVS60P-MS1-K02**
			1NO/1NC	**C22-PVS60P-MS1-K11**
		MS2	2NC	**C22-PVS60P-MS2-K02**
			1NO/1NC	**C22-PVS60P-MS2-K11**
		MS3	2NC	**C22-PVS60P-MS3-K02**
			1NO/1NC	**C22-PVS60P-MS3-K11**
		MS4	2NC	**C22-PVS60P-MS4-K02**
			1NO/1NC	**C22-PVS60P-MS4-K11**
		MS5	2NC	**C22-PVS60P-MS5-K02**
			1NO/1NC	**C22-PVS60P-MS5-K11**
		MS6	2NC	**C22-PVS60P-MS6-K02**
			1NO/1NC	**C22-PVS60P-MS6-K11**
		MS7	2NC	**C22-PVS60P-MS7-K02**
			1NO/1NC	**C22-PVS60P-MS7-K11**
		MS8	2NC	**C22-PVS60P-MS8-K02**
			1NO/1NC	**C22-PVS60P-MS8-K11**
		Ronis	2NC	**C22-PVS60P-RS-K02**
			1NO/1NC	**C22-PVS60P-RS-K11**

E-stop

E-stop

C22-PV-K11-P62

C22-PVT-K02-P65

C22-PVT45PMPIK 02-P65

Release Method	Operator Size	Contacts	Connector Length	Connector Type	Catalog Number
Push-pull	38 mm	2NC	1	Flying lead	**C22-PV-K02-P62**
	38 mm	2NC	3.5	Flying lead	**C22-PV-K02-P65**
	38 mm	1NO/1NC	1	Flying lead	**C22-PV-K11-P62**
	38 mm	1NO/1NC	3.5	Flying lead	**C22-PV-K11-P65**
	45 mm	2NC	0.2	M12, 5-pole	**C22-PV-K02-P10**
Twist release	38 mm	2NC	1	Flying lead	**C22-PVT-K02-P62**
	38 mm	2NC	3.5	Flying lead	**C22-PVT-K02-P65**
	38 mm	1NO/1NC	1	Flying lead	**C22-PVT-K11-P62**
	38 mm	1NO/1NC	3.5	Flying lead	**C22-PVT-K11-P65**
	45 mm	2NC	1	Flying lead	**C22-PVT45P-K02-P62**
	45 mm	2NC	3.5	Flying lead	**C22-PVT45P-K02-P65**
	45 mm	1NO/1NC	1	Flying lead	**C22-PVT45P-K11-P62**
	45 mm	1NO/1NC	3.5	Flying lead	**C22-PVT45P-K11-P65**
	45 mm	2NC	0.2	M12, 5-pole	**C22-PVT45P-K02-P10**
Twist release mechanical indication	45 mm	2NC	1	Flying lead	**C22-PVT45PMPIK02-P62**
	45 mm	2NC	3.5	Flying lead	**C22-PVT45PMPIK02-P65**
	45 mm	1NO/1NC	1	Flying lead	**C22-PVT45PMPIK11-P62**
	45 mm	1NO/1NC	3.5	Flying lead	**C22-PVT45PMPIK11-P65**

Note: ⊖ = Safety function implemented with positive opening as defined in IEC/EN 60947-5-1.

Selector Switches

Contents

Description	*Page*
Pushbuttons—Non-Illuminated and Illuminated	**V7-T1-134**
Indicating Lights	**V7-T1-147**
Emergency Stops	**V7-T1-150**
Selector Switches	
Non-Illuminated, Knob Type	**V7-T1-154**
Non-Illuminated, Key Operated	**V7-T1-156**
Technical Data and Specifications	**V7-T1-160**
Dimensions	**V7-T1-162**

Selector Switches

Product Description

With over 20 variations of operation and 8 varieties of key codes, the C22 line offers a very complete line of selector switches.

Pigtail units come in M12, M8 or flying lead options.

Note: For additional accessories, please see **Pages V7-T1-105** to **V7-T1-111**, 22.5 mm Modular Pushbuttons—M22 Accessories.

Features

- Selector switch (non-keyed) rated for 1 million mechanical operations
- Rear pigtails provide IP65 front and rear ratings, eliminating enclosure requirements and reducing installation times

Protection Type

- IP65
- NEMA 4X, 13

1

Catalog Number Selection

Catalog Number Selection is for illustrative purposes only and not to be used to create new catalog numbers.

Selector Switches—Non-Keyed

C22 - WK - K10 - P1

Bezel
C22 = Silver
C22S = Black

Operator Type
WK = 2-position, momentary
WKV = 2-position, momentary, "V" position
WRK = 2-position, maintained
WRKV = 2-position, maintained, "V" position
WK3 = 3-position, momentary
WRK3 = 3-position, maintained

Contact Blocks
K10 = 1NO
K20 = 2NO
K01 = 1NC
K02 = 2NC
K11 = 1NO/1NC

Connector Type
P1 = 0.2 m M12, 4-pole
P3 = 0.5 m M12, 4-pole
P5 = 1.0 m M12, 4-pole
P30 = 0.2 m M8, 4-pole
P31 = 0.5 m M8, 4-pole
P32 = 1.0 m M8, 4-pole
P62 = 1.0 m flying lead
P65 = 3.5 m flying lead

Product Selection

Non-Illuminated, Knob Type

C22(S)-WK-_/
C22(S)-WRK_

Non-Illuminated Selector Switches, Knob Type

Type	Switching Position	Contact Block Configuration	Silver Bezel Catalog Number	Black Bezel Catalog Number
Two-position	Momentary 40°	1NO	**C22-WK-K10**	**C22S-WK-K10**
		2NO	**C22-WK-K20**	**C22S-WK-K20**
		1NC	**C22-WK-K01**	**C22S-WK-K01**
		2NC	**C22-WK-K02**	**C22S-WK-K02**
		1NO/1NC	**C22-WK-K11**	**C22S-WK-K11**
	Momentary 60°	1NO	**C22-WKV-K10**	**C22S-WKV-K10**
		2NO	**C22-WKV-K20**	**C22S-WKV-K20**
		1NC	**C22-WKV-K01**	**C22S-WKV-K01**
		2NC	**C22-WKV-K02**	**C22S-WKV-K02**
		1NO/1NC	**C22-WKV-K11**	**C22S-WKV-K11**
	Maintained 40°	1NO	**C22-WRK-K10**	**C22S-WRK-K10**
		2NO	**C22-WRK-K20**	**C22S-WRK-K20**
		1NC	**C22-WRK-K01**	**C22S-WRK-K01**
		2NC	**C22-WRK-K02**	**C22S-WRK-K02**
		1NO/1NC	**C22-WRK-K11**	**C22S-WRK-K11**
	Maintained 60°	1NO	**C22-WRKV-K10**	**C22S-WRKV-K10**
		2NO	**C22-WRKV-K20**	**C22S-WRKV-K20**
		1NC	**C22-WRKV-K01**	**C22S-WRKV-K01**
		2NC	**C22-WRKV-K02**	**C22S-WRKV-K02**
		1NO/1NC	**C22-WRKV-K11**	**C22S-WRKV-K11**
Three-position	Momentary 40° 40°	2NO	**C22-WK3-K20**	**C22S-WK3-K20**
		2NC	**C22-WK3-K02**	**C22S-WK3-K02**
		1NO/1NC	**C22-WK3-K11**	**C22S-WK3-K11**
	Maintained 60° 60°	2NO	**C22-WRK3-K20**	**C22S-WRK3-K20**
		2NC	**C22-WRK3-K02**	**C22S-WRK3-K02**
		1NO/1NC	**C22-WRK3-K11**	**C22S-WRK3-K11**

Note: Momentary selector switches can be field converted to maintained.

Non-Illuminated Selector Switches, Knob Type, with Pigtail

C22-W_

Non-Illuminated Selector Switches, Knob Type, with Pigtail

Type	Switching Position	Contacts	Connector Length	Connector Type	Silver Bezel Catalog Number
Two-position	Momentary	1NC	1	Flying lead	**C22-WK-K01-P62**
		1NC	3.5	Flying lead	**C22-WK-K01-P65**
		1NO	0.5	M8	**C22-WK-K10-P30**
		1NO	0.5	M12	**C22-WK-K10-P1**
		1NO	1	M8	**C22-WK-K10-P32**
		1NO	1	M12	**C22-WK-K10-P5**
		1NO	1	Flying lead	**C22-WK-K10-P62**
		1NO	3.5	Flying lead	**C22-WK-K10-P65**
		1NO/1NC	1	Flying lead	**C22-WK-K11-P62**
		1NO/1NC	3.5	Flying lead	**C22-WK-K11-P65**
		2NC	1	Flying lead	**C22-WK-K02-P62**
		2NC	3.5	Flying lead	**C22-WK-K02-P65**
		2NO	1	Flying lead	**C22-WK-K20-P62**
		2NO	3.5	Flying lead	**C22-WK-K20-P65**
	Maintained	1NC	1	Flying lead	**C22-WRK-K01-P62**
		1NC	3.5	Flying lead	**C22-WRK-K01-P65**
		1NO	0.5	M8	**C22-WRK-K10-P30**
		1NO	0.5	M12	**C22-WRK-K10-P1**
		1NO	1	M8	**C22-WRK-K10-P32**
		1NO	1	M12	**C22-WRK-K10-P5**
		1NO	1	Flying lead	**C22-WRK-K10-P62**
		1NO	3.5	Flying lead	**C22-WRK-K10-P65**
		1NO/1NC	1	Flying lead	**C22-WRK-K11-P62**
		1NO/1NC	3.5	Flying lead	**C22-WRK-K11-P65**
		2NC	1	Flying lead	**C22-WRK-K02-P62**
		2NC	3.5	Flying lead	**C22-WRK-K02-P65**
		2NO	1	Flying lead	**C22-WRK-K20-P62**
		2NO	3.5	Flying lead	**C22-WRK-K20-P65**
Three-position	Momentary	1NO/1NC	1	Flying lead	**C22-WK3-K11-P62**
		1NO/1NC	3.5	Flying lead	**C22-WK3-K11-P65**
		2NC	1	Flying lead	**C22-WK3-K02-P62**
		2NC	3.5	Flying lead	**C22-WK3-K02-P65**
		2NO	1	Flying lead	**C22-WK3-K20-P62**
		2NO	3.5	Flying lead	**C22-WK3-K20-P65**
	Maintained	1NO/1NC	1	Flying lead	**C22-WRK3-K11-P62**
		1NO/1NC	3.5	Flying lead	**C22-WRK3-K11-P65**
		2NC	1	Flying lead	**C22-WRK3-K02-P62**
		2NC	3.5	Flying lead	**C22-WRK3-K02-P65**
		2NO	1	Flying lead	**C22-WRK3-K20-P62**
		2NO	3.5	Flying lead	**C22-WRK3-K20-P65**

1

Catalog Number Selection

Catalog Number Selection is for illustrative purposes only and not to be used to create new catalog numbers.

Selector Switches—Keyed

C22 - WS - MS1 - A1 ① - K10 - P1

Bezel	Operator Type	Key Code	Contact Blocks	Connector Type
C22 = Silver	**WS** = 2-position, momentary	**MS1** = MS1	**K10** = 1NO	**P1** = 0.2 m M12, 4-pole
C22S = Black	**WRS** = 2-position, maintained	**MS2** = MS2	**K20** = 2NO	**P3** = 0.5 m M12, 4-pole
	WRS-….-A1 ① = 2-position, maintained, key removal left	**MS3** = MS3	**K01** = 1NC	**P5** = 1.0 m M12, 4-pole
	WS3 = 3-position, momentary	**MS4** = MS4	**K02** = 2NC	**P30** = 0.2 m M8, 4-pole
	WRS3 = 3-position, maintained	**MS5** = MS5	**K11** = 1NO/1NC	**P31** = 0.5 m M8, 4-pole
		MS6 = MS6		**P32** = 1.0 m M8, 4-pole
		MS7 = MS7		**P62** = 1.0 m flying lead
		MS8 = MS8		**P65** = 3.5 m flying lead

Non-Illuminated, Key Operated

C22(S)-WS-MS_

Non-Illuminated Selector Switches, Key Operated

Position	Type	Key Code	Contact Block Configuration	Silver Bezel Catalog Number	Black Bezel Catalog Number
Two-position	Momentary key removal left 40°	MS1	1NO	**C22-WS-MS1-K10**	**C22S-WS-MS1-K10**
			2NO	**C22-WS-MS1-K20**	**C22S-WS-MS1-K20**
			1NC	**C22-WS-MS1-K01**	**C22S-WS-MS1-K01**
			2NC	**C22-WS-MS1-K02**	**C22S-WS-MS1-K02**
			1NO/1NC	**C22-WS-MS1-K11**	**C22S-WS-MS1-K11**
		MS2	1NO	**C22-WS-MS2-K10**	**C22S-WS-MS2-K10**
			2NO	**C22-WS-MS2-K20**	**C22S-WS-MS2-K20**
			1NC	**C22-WS-MS2-K01**	**C22S-WS-MS2-K01**
			2NC	**C22-WS-MS2-K02**	**C22S-WS-MS2-K02**
			1NO/1NC	**C22-WS-MS2-K11**	**C22S-WS-MS2-K11**
		MS3	1NO	**C22-WS-MS3-K10**	**C22S-WS-MS3-K10**
			2NO	**C22-WS-MS3-K20**	**C22S-WS-MS3-K20**
			1NC	**C22-WS-MS3-K01**	**C22S-WS-MS3-K01**
			2NC	**C22-WS-MS3-K02**	**C22S-WS-MS3-K02**
			1NO/1NC	**C22-WS-MS3-K11**	**C22S-WS-MS3-K11**
		MS4	1NO	**C22-WS-MS4-K10**	**C22S-WS-MS4-K10**
			2NO	**C22-WS-MS4-K20**	**C22S-WS-MS4-K20**
			1NC	**C22-WS-MS4-K01**	**C22S-WS-MS4-K01**
			2NC	**C22-WS-MS4-K02**	**C22S-WS-MS4-K02**
			1NO/1NC	**C22-WS-MS4-K11**	**C22S-WS-MS4-K11**
		MS5	1NO	**C22-WS-MS5-K10**	**C22S-WS-MS5-K10**
			2NO	**C22-WS-MS5-K20**	**C22S-WS-MS5-K20**
			1NC	**C22-WS-MS5-K01**	**C22S-WS-MS5-K01**
			2NC	**C22-WS-MS5-K02**	**C22S-WS-MS5-K02**
			1NO/1NC	**C22-WS-MS5-K11**	**C22S-WS-MS5-K11**

Note: Momentary selector switches can be field converted to maintained.

C22(S)-WRS-MS_

Non-Illuminated Selector Switches, Key Operated, continued

Position	Type	Key Code	Contact Block Configuration	Silver Bezel Catalog Number	Black Bezel Catalog Number
Two-position, continued	Momentary key removal left 40°	MS6	1NO	**C22-WS-MS6-K10**	**C22S-WS-MS6-K10**
			2NO	**C22-WS-MS6-K20**	**C22S-WS-MS6-K20**
			1NC	**C22-WS-MS6-K01**	**C22S-WS-MS6-K01**
			2NC	**C22-WS-MS6-K02**	**C22S-WS-MS6-K02**
			1NO/1NC	**C22-WS-MS6-K11**	**C22S-WS-MS6-K11**
		MS7	1NO	**C22-WS-MS7-K10**	**C22S-WS-MS7-K10**
			2NO	**C22-WS-MS7-K20**	**C22S-WS-MS7-K20**
			1NC	**C22-WS-MS7-K01**	**C22S-WS-MS7-K01**
			2NC	**C22-WS-MS7-K02**	**C22S-WS-MS7-K02**
			1NO/1NC	**C22-WS-MS7-K11**	**C22S-WS-MS7-K11**
		MS8	1NO	**C22-WS-MS8-K10**	**C22S-WS-MS8-K10**
			2NO	**C22-WS-MS8-K20**	**C22S-WS-MS8-K20**
			1NC	**C22-WS-MS8-K01**	**C22S-WS-MS8-K01**
			2NC	**C22-WS-MS8-K02**	**C22S-WS-MS8-K02**
			1NO/1NC	**C22-WS-MS8-K11**	**C22S-WS-MS8-K11**
Two-position	Maintained key removal left/right 40°	MS1	1NO	**C22-WRS-MS1-K10**	**C22S-WRS-MS1-K10**
			2NO	**C22-WRS-MS1-K20**	**C22S-WRS-MS1-K20**
			1NC	**C22-WRS-MS1-K01**	**C22S-WRS-MS1-K01**
			2NC	**C22-WRS-MS1-K02**	**C22S-WRS-MS1-K02**
			1NO/1NC	**C22-WRS-MS1-K11**	**C22S-WRS-MS1-K11**
		MS2	1NO	**C22-WRS-MS2-K10**	**C22S-WRS-MS2-K10**
			2NO	**C22-WRS-MS2-K20**	**C22S-WRS-MS2-K20**
			1NC	**C22-WRS-MS2-K01**	**C22S-WRS-MS2-K01**
			2NC	**C22-WRS-MS2-K02**	**C22S-WRS-MS2-K02**
			1NO/1NC	**C22-WRS-MS2-K11**	**C22S-WRS-MS2-K11**
		MS3	1NO	**C22-WRS-MS3-K10**	**C22S-WRS-MS3-K10**
			2NO	**C22-WRS-MS3-K20**	**C22S-WRS-MS3-K20**
			1NC	**C22-WRS-MS3-K01**	**C22S-WRS-MS3-K01**
			2NC	**C22-WRS-MS3-K02**	**C22S-WRS-MS3-K02**
			1NO/1NC	**C22-WRS-MS3-K11**	**C22S-WRS-MS3-K11**

Note: Momentary selector switches can be field converted to maintained.

1

C22(S)-WRS…-MS1_

Non-Illuminated Selector Switches, Key Operated, continued

Position	Type	Key Code	Contact Block Configuration	Silver Bezel Catalog Number	Black Bezel Catalog Number
Two-position, continued	Maintained key removal left/right 40°	MS4	1NO	**C22-WRS-MS4-K10**	**C22S-WRS-MS4-K10**
			2NO	**C22-WRS-MS4-K20**	**C22S-WRS-MS4-K20**
			1NC	**C22-WRS-MS4-K01**	**C22S-WRS-MS4-K01**
			2NC	**C22-WRS-MS4-K02**	**C22S-WRS-MS4-K02**
			1NO/1NC	**C22-WRS-MS4-K11**	**C22S-WRS-MS4-K11**
		MS5	1NO	**C22-WRS-MS5-K10**	**C22S-WRS-MS5-K10**
			2NO	**C22-WRS-MS5-K20**	**C22S-WRS-MS5-K20**
			1NC	**C22-WRS-MS5-K01**	**C22S-WRS-MS5-K01**
			2NC	**C22-WRS-MS5-K02**	**C22S-WRS-MS5-K02**
			1NO/1NC	**C22-WRS-MS5-K11**	**C22S-WRS-MS5-K11**
		MS6	1NO	**C22-WRS-MS6-K10**	**C22S-WRS-MS6-K10**
			2NO	**C22-WRS-MS6-K20**	**C22S-WRS-MS6-K20**
			1NC	**C22-WRS-MS6-K01**	**C22S-WRS-MS6-K01**
			2NC	**C22-WRS-MS6-K02**	**C22S-WRS-MS6-K02**
			1NO/1NC	**C22-WRS-MS6-K11**	**C22S-WRS-MS6-K11**
		MS7	1NO	**C22-WRS-MS7-K10**	**C22S-WRS-MS7-K10**
			2NO	**C22-WRS-MS7-K20**	**C22S-WRS-MS7-K20**
			1NC	**C22-WRS-MS7-K01**	**C22S-WRS-MS7-K01**
			2NC	**C22-WRS-MS7-K02**	**C22S-WRS-MS7-K02**
			1NO/1NC	**C22-WRS-MS7-K11**	**C22S-WRS-MS7-K11**
		MS8	1NO	**C22-WRS-MS7-K10**	**C22S-WRS-MS7-K10**
			2NO	**C22-WRS-MS7-K20**	**C22S-WRS-MS7-K20**
			1NC	**C22-WRS-MS7-K01**	**C22S-WRS-MS7-K01**
			2NC	**C22-WRS-MS7-K02**	**C22S-WRS-MS7-K02**
			1NO/1NC	**C22-WRS-MS7-K11**	**C22S-WRS-MS7-K11**
Two-position	Maintained key removal left 40°	MS1	1NO	**C22-WRS-MS1-A1-K10**	**C22S-WRS-MS1-A1-K10**
			2NO	**C22-WRS-MS1-A1-K20**	**C22S-WRS-MS1-A1-K20**
			1NC	**C22-WRS-MS1-A1-K01**	**C22S-WRS-MS1-A1-K01**
			2NC	**C22-WRS-MS1-A1-K02**	**C22S-WRS-MS1-A1-K02**
			1NO/1NC	**C22-WRS-MS1-A1-K11**	**C22S-WRS-MS1-A1-K11**
Three Position	Momentary Key Removal Center 40° 40°	MS1	2NO	**C22-WS3-MS1-K20**	**C22S-WS3-MS1-K20**
			2NC	**C22-WS3-MS1-K02**	**C22S-WS3-MS1-K02**
			1NO/1NC	**C22-WS3-MS1-K11**	**C22S-WS3-MS1-K11**
	Maintained Key Removal Left/Right 60° 60°	MS1	2NO	**C22-WRS3-MS1-K20**	**C22S-WRS3-MS1-K20**
			2NC	**C22-WRS3-MS1-K02**	**C22S-WRS3-MS1-K02**
			1NO/1NC	**C22-WRS3-MS1-K11**	**C22S-WRS3-MS1-K11**

Note: Momentary selector switches can be field converted to maintained.

Non-Illuminated Selector Switches, Key Operated, with Pigtail

C22-W_

Non-Illuminated Selector Switches, Key Operated, with Pigtail

Position	Switching Position	Contacts	Connector Length	Connector Type	Silver Bezel Catalog Number
Two-position	Momentary	1NC	1 m	Flying lead	**C22-WS-MS1-K01-P62**
	40°	1NC	3.5 m	Flying lead	**C22-WS-MS1-K01-P65**
		1NO	0.2 m	M12	**C22-WS-MS1-K10-P1**
		1NO	0.2 m	M8	**C22-WS-MS1-K10-P30**
		1NO	1 m	M12	**C22-WS-MS1-K10-P5**
		1NO	1 m	M8	**C22-WS-MS1-K10-P32**
		1NO	1 m	Flying lead	**C22-WS-MS1-K10-P62**
		1NO	3.5 m	Flying lead	**C22-WS-MS1-K10-P65**
		1NO/1NC	1 m	Flying lead	**C22-WS-MS1-K11-P62**
		1NO/1NC	3.5 m	Flying lead	**C22-WS-MS1-K11-P65**
		2NC	1 m	Flying lead	**C22-WS-MS1-K02-P62**
		2NC	3.5 m	Flying lead	**C22-WS-MS1-K02-P65**
		2NO	1 m	Flying lead	**C22-WS-MS1-K20-P62**
		2NO	3.5 m	Flying lead	**C22-WS-MS1-K20-P65**
	Maintained	1NC	1 m	Flying lead	**C22-WRS-MS1-K01-P62**
	60°	1NC	3.5 m	Flying lead	**C22-WRS-MS1-K01-P65**
		1NO	0.2 m	M12	**C22-WRS-MS1-K10-P1**
		1NO	0.2 m	M8	**C22-WRS-MS1-K10-P30**
		1NO	1 m	M12	**C22-WRS-MS1-K10-P5**
		1NO	1 m	M8	**C22-WRS-MS1-K10-P32**
		1NO	1 m	Flying lead	**C22-WRS-MS1-K10-P62**
		1NO	3.5 m	Flying lead	**C22-WRS-MS1-K10-P65**
		1NO/1NC	1 m	Flying lead	**C22-WRS-MS1-K11-P62**
		1NO/1NC	3.5 m	Flying lead	**C22-WRS-MS1-K11-P65**
		2NC	1 m	Flying lead	**C22-WRS-MS1-K02-P62**
		2NC	3.5 m	Flying lead	**C22-WRS-MS1-K02-P65**
		2NO	1 m	Flying lead	**C22-WRS-MS1-K20-P62**
		2NO	3.5 m	Flying lead	**C22-WRS-MS1-K20-P65**
Three-position	Momentary	1NO/1NC	1 m	Flying lead	**C22-WS3-MS1-K11-P62**
	40° 40°	1NO/1NC	3.5 m	Flying lead	**C22-WS3-MS1-K11-P65**
		2NC	1 m	Flying lead	**C22-WS3-MS1-K02-P62**
		2NC	3.5 m	Flying lead	**C22-WS3-MS1-K02-P65**
		2NO	1 m	Flying lead	**C22-WS3-MS1-K20-P62**
		2NO	3.5 m	Flying lead	**C22-WS3-MS1-K20-P65**
	Maintained	1NO/1NC	1 m	Flying lead	**C22-WRS3-MS1-K11-P62**
	60° 60°	1NO/1NC	3.5 m	Flying lead	**C22-WRS3-MS1-K11-P65**
		2NC	1 m	Flying lead	**C22-WRS3-MS1-K02-P62**
		2NC	3.5 m	Flying lead	**C22-WRS3-MS1-K02-P65**
		2NO	1 m	Flying lead	**C22-WRS3-MS1-K20-P62**
		2NO	3.5 m	Flying lead	**C22-WRS3-MS1-K20-P65**

1

Technical Data and Specifications

22.5 mm RMQ Compact Pushbuttons—C22

Description	Unit		Pushbutton Actuators Illuminated Pushbuttons C22 Momentary	Maintained	Indicator Lights C22	Selector Switch Actuators C22	Key-Operated Buttons C22	Emergency Stop/ Emergency Switching OFF Pushbuttons C22
General								
Standards			IEC/EN 60947 VDE 0660					
Lifespan, mechanical	Operations	x 10^6	5	1	—	1	0.1	0.05
Operating frequency	Operations/h		≥3600	≥3600	—	≥2000	≥100	≥300
Actuating force		N	≥5	≥5	—	—	—	≥50
Operating torque		Nm	—	—	—	≥0.3	≥0.5	—
Terminal screw tightening torque		Nm	0.8	0.8	0.8	0.8	0.8	0.8
Threaded ring tightening torque		Nm	2	2	2	2	2	2
Protection type			IP67, IP69K	IP67, IP69K	IP67, IP69K	IP65	IP66	IP67, IP69K
Climatic proofing			Damp heat, constant, to IEC 60068-2-78 Damp heat, cyclic, to IEC 60068-2-30					
Ambient temperature								
Open		°C	–25° to 70°	–25° to 70°	–25° to 70°	–25° to 70°	–25° to 70°	–25° to 70°
Storage		°C	–30° to 80°	–30° to 80°	–30° to 80°	–30° to 80°	–30° to 80°	–30° to 80°
Mounting position			As required	As required	As required	As required	As required	As required
Mechanical shock resistance to IEC 60068-2-27 Shock duration 11 ms, half-sinusoidal		g	30	30	30	30	30	30
Terminal capacities								
Solid		mm^2	2 x 0.5–1.5	2 x 0.5–1.5	2 x 0.5–1.5	2 x 0.5–1.5	2 x 0.5–1.5	2 x 0.5–1.5
Flexible with ferrule		mm^2	2 x 0.5–1.5	2 x 0.5–1.5	2 x 0.5–1.5	2 x 0.5–1.5	2 x 0.5–1.5	2 x 0.5–1.5
Contacts								
Rated impulse withstand voltage	U_{imp}	Vac	4000	4000	4000	4000	4000	4000
Rated insulation voltage	U_i	V	250	250	250	250	250	250
Overvoltage category/pollution degree			III/3	III/3	III/3	III/3	III/3	III/3
Control circuit reliability								
at 5 Vdc/1 mA	H_F	Fault probability	Values follow	Values follow	—	Values follow	Values follow	Values follow
at 17 Vdc/7 mA	H_F	Fault probability	N/O contact: statistically determined 1 failure per 17 x 10^6 operations N/C contact: statistically determined 1 failure per 0.9 x 10^6 operations		—	N/O contact: statistically determined 1 failure per 17 x 10^6 operations N/C contact: statistically determined 1 failure per 0.9 x 10^6 operations		
at 24 Vdc/5 mA	H_F	Fault probability	Values follow	Values follow	—	Values follow	Values follow	Values follow
Max. short-circuit protective device								
Fuse	gG/gL	A	10	10	—	10	10	10

22.5 mm RMQ Compact Pushbuttons—C22, continued

Description	Unit		Push-button Actuators Illuminated Pushbuttons C22 Momentary	Maintained	Indicator Lights C22	Selector Switch Actuators C22	Key-Operated Buttons C22	Emergency Stop/ Emergency Switching OFF Pushbuttons C22
Switching Capacity								
Rated operational current								
AC-15								
24V	I_e	A	4	4	—	4	4	4
110V	I_e	A	2	2	—	2	2	2
230V	I_e	A	1.5	1.5	—	1.5	1.5	1.5
DC-13								
24V	I_e	A	3	3	—	3	3	3
60V	I_e	A	1	1	—	1	1	1
110V	I_e	A	0.6	0.6	—	0.6	0.6	0.6
220V	I_e	A	0.3	0.3	—	0.3	0.3	0.3
Lifespan, electrical								
AC-15								
230V/0.5A	Operations	x 10^6	0.4	0.4	—	0.4	0.4	0.4
230V/1.0A		x 10^6	0.6	0.6	—	0.6	0.6	0.6

Contact Travel

Contact Travel Diagram

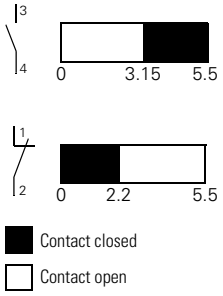

Contact closed

Contact open

1

Dimensions

Approximate Dimensions in mm [in]

Illuminated Pushbuttons

Flat

C22(S)-DRL_/C22(S)-DL_

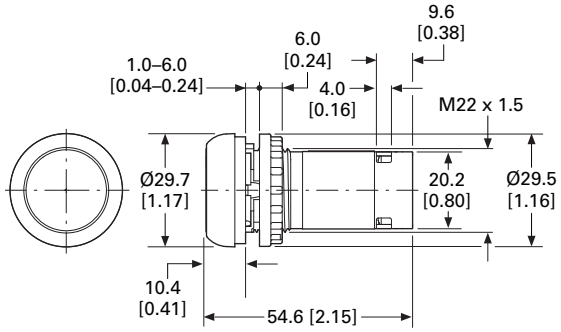

Extended

C22(S)-DRLH_/C22(S)-DLH_

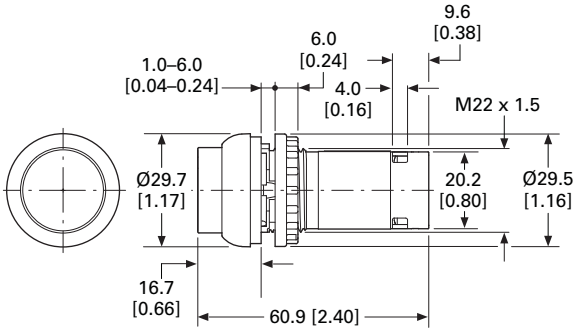

Pushbutton Actuators

Flat

C22(S)-DR_/C22(S)-D_

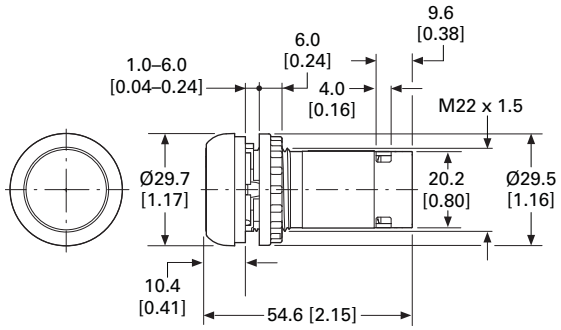

Extended

C22(S)-DRH_/C22(S)-DH_

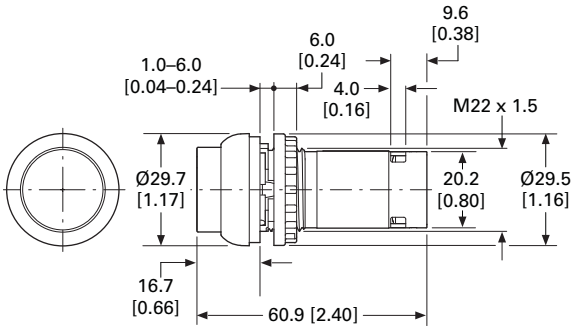

Indicating Lights

Flat

C22-L_

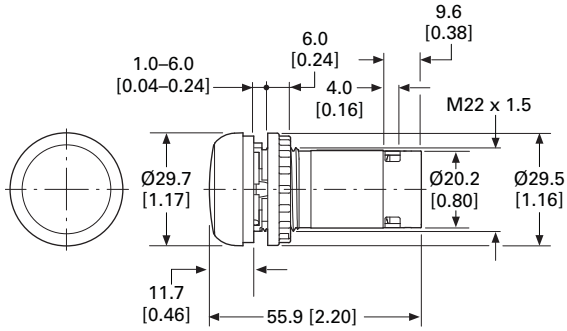

Approximate Dimensions in mm [in]

Emergency Stop/Emergency Switching OFF Pushbuttons

C22-PVT45P_

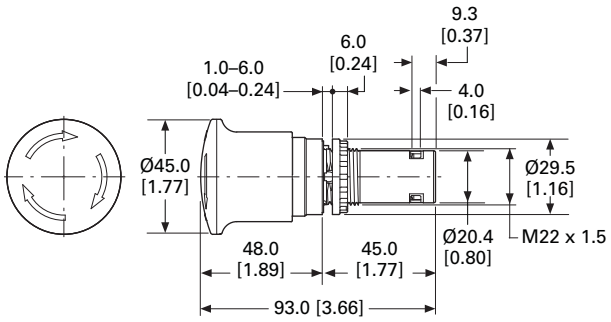

C22-PVT60P_

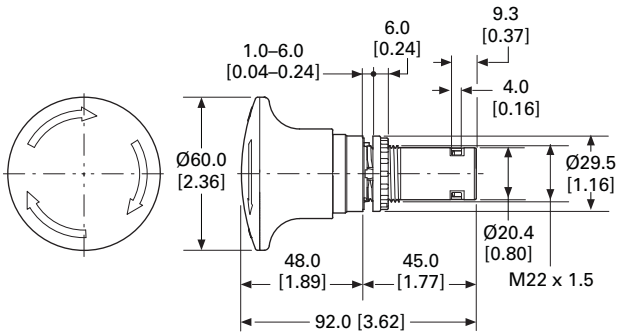

C22-PVT45P-MS_

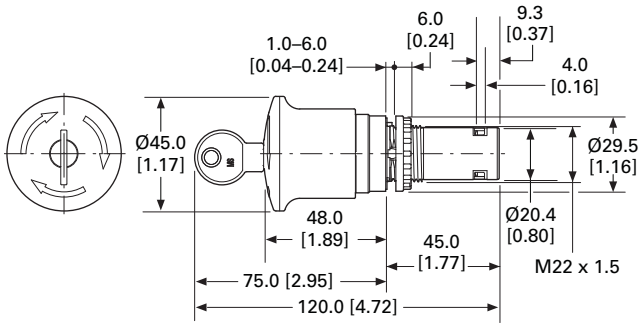

C22-PVT45P-RS_

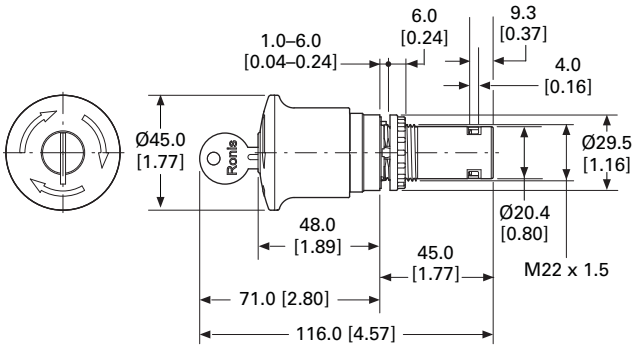

C22-PVT60P-MS_

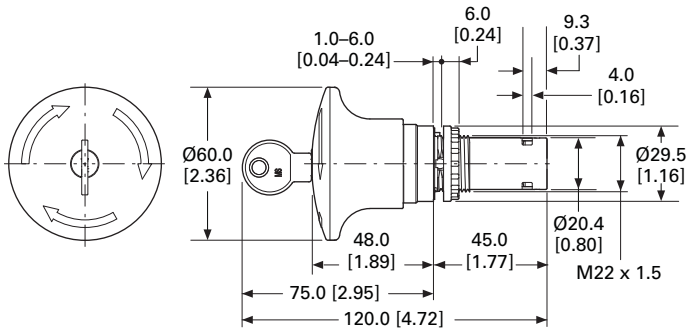

C22-PVT60P-MS_

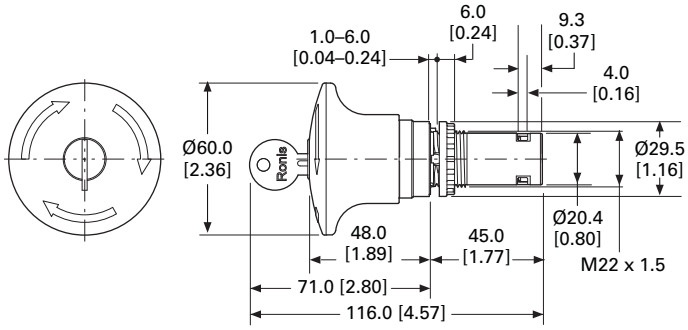

1

Approximate Dimensions in mm [in]

Selector Switch Actuators

C22(S)-W(R)K_

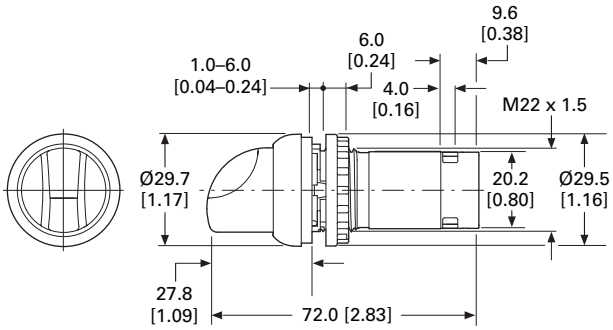

Selector Switch Actuators/V Position

C22(S)-W(R)KV_

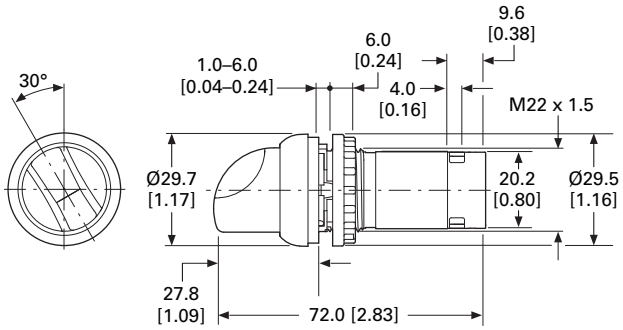

Key Operated Actuators

C22(S)-WS(3)-MS_/C22(S)-WRS(3)-MS_

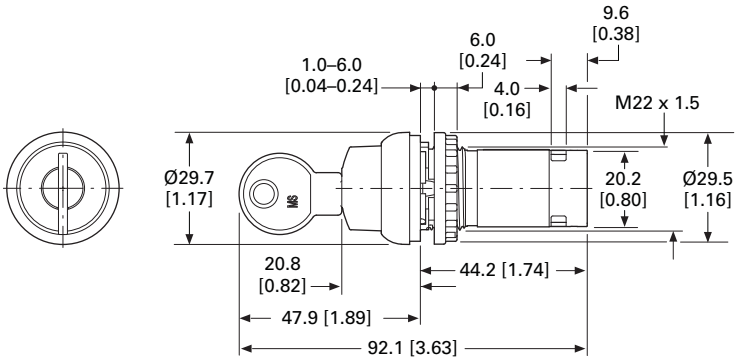

C22(S)-WS(3)-RS_/C22(S)-WRS(3)-RS_

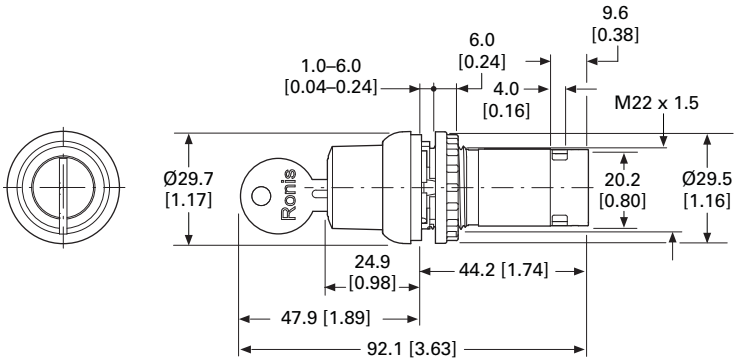

Approximate Dimensions in mm [in]

Pushbuttons, M12A
C22-D...-P1/-P3/-P5

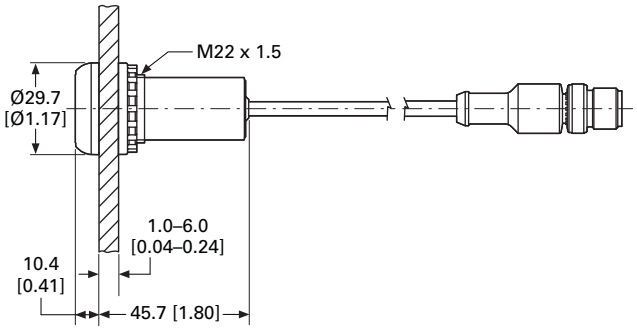

Pushbuttons, M8
C22-D...-P30/-P31/-P32

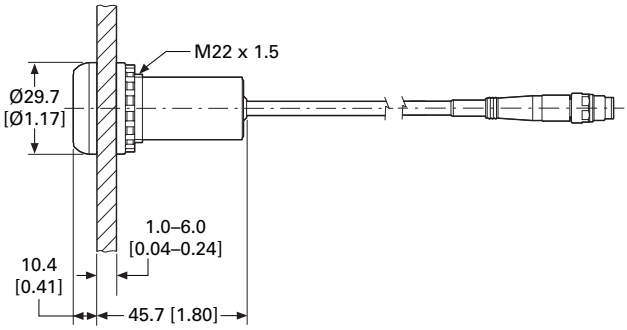

Pushbuttons, Unterminated Cable End, Flying Lead
C22-D...-P/-P62/-P65

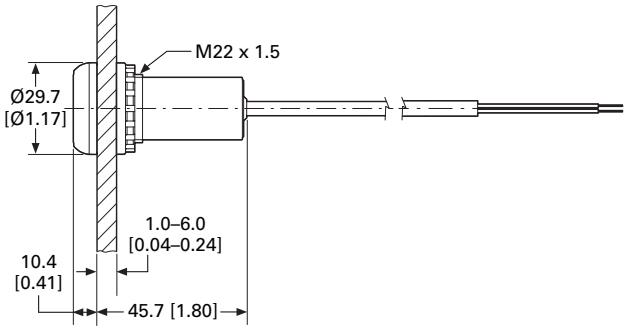

Indicator Lights, M12A
C22-L-...-P1/-P3/-P5

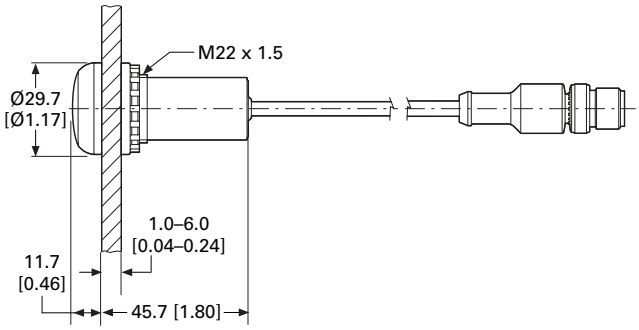

Indicator Lights, M8
C22-L-...-P30/-P31/-P32

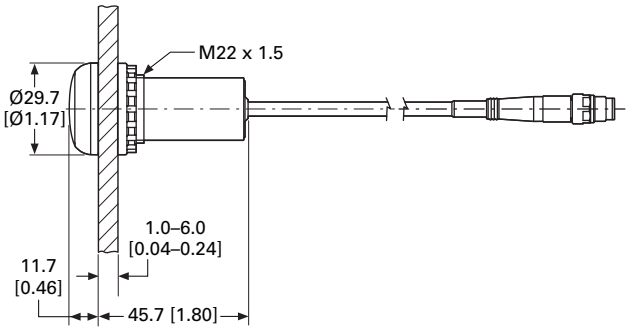

Indicator Lights, Unterminated Cable End, Flying Lead
C22-L-...-P62/-P65

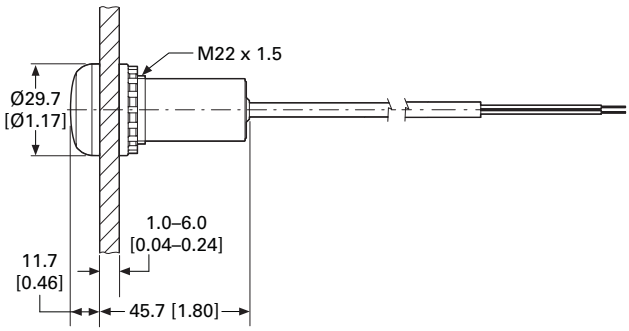

Approximate Dimensions in mm [in]

Emergency Switching Off, M12A
C22-PVT...-P10

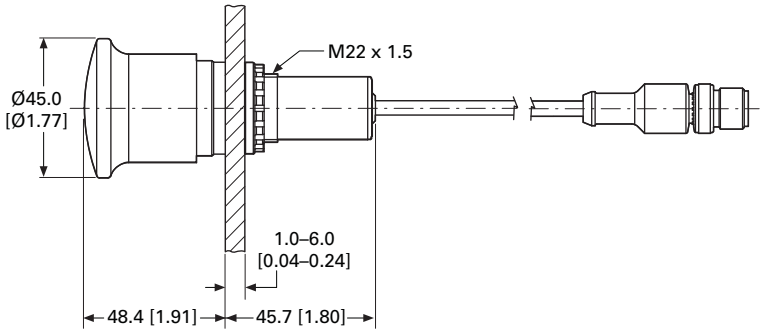

Emergency Switching Off, Unterminated Cable End, Flying Lead
C22-PVT...-P62/-P65

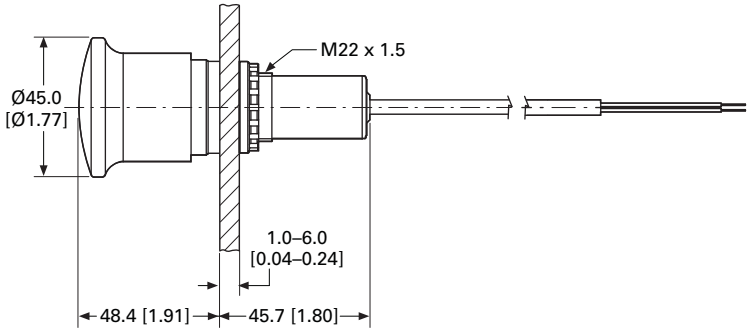

Emergency Switching Off, M12
C22-PV-...-P10

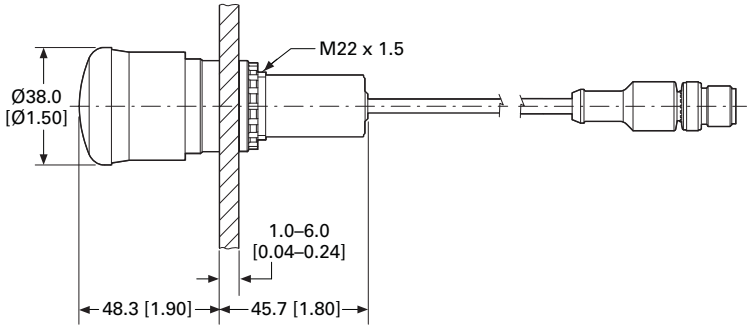

Emergency Switching Off, Unterminated Cable End, Flying Lead
C22-PV-...-P62/-P65

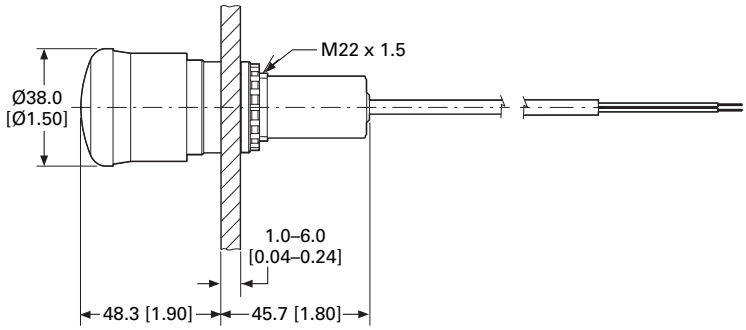

Approximate Dimensions in mm [in]

Key-Operated Buttons, M12A
C22-W(R)S(3)-MS1-...-P1/-P5

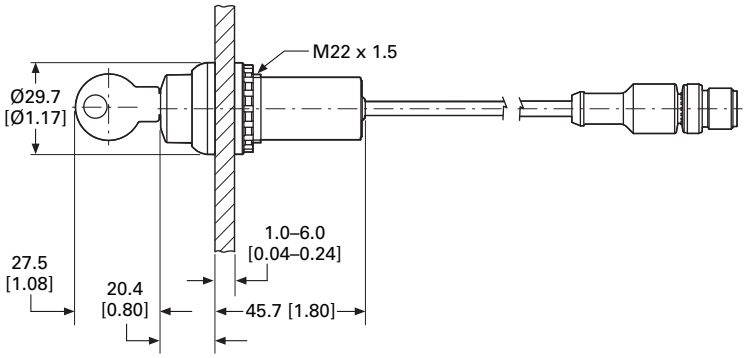

Key-Operated Buttons, M8
C22-W(R)S(3)-MS1-...-P30/-P32

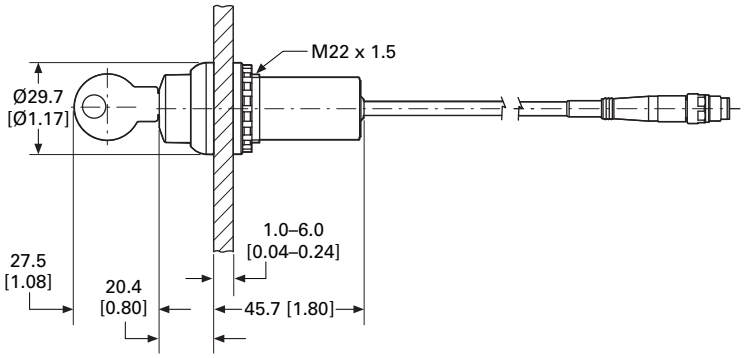

Key-Operated Buttons, Unterminated Cable End, Flying Lead
C22-W(R)S(3)-MS1-...-P62/-P65

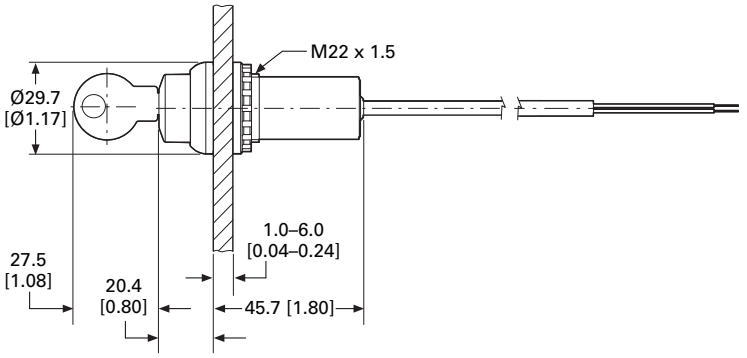

Contents

Description	*Page*
Global Modular 30 mm Pilot Devices—M30 Flat Operators	
System Overview	**V7-T1-170**
Product Selection	**V7-T1-172**
Technical Data	**V7-T1-180**
Dimensions	**V7-T1-183**

Product Description

The new and modern M30 30 mm operators of the Global pilot devices offer a flat design and functionality while withstanding exposure to oil, dirt and water. Ability to be combined with existing traditional and flat designed M22 contact blocks and indicating lights, M30 operators provide modularity, simplicity and elegance for more demanding commercial and industrial applications.

Our new offering includes stainless steel bezel (M30I) options for extended corrosion protection along with the metal bezel (M30C) options for everyday operations.

Features

- Flat design for modern look and smooth transition between the machine and the operator
- Compatible with existing M22 contact blocks (M22-K…) and indicating lights for enhanced modularity (M22-LED…) and sustainable inventory management
- Compatible with the new M22 flat contact blocks (M22-FK…) and indicating lights for optimized footprint (M22-FLED-…)
- Stainless steel bezel (M30I) options for extended corrosion protection along with the metal bezel (M30C) options for everyday operations
- AFX mounting system for easy and secure installation
- Robust against vandalism
- Up to IP69K for increased protection
- For M30 CAD drawings, please visit the 3D drawings section under the documentation tab at www.eaton.com/m30
- Refer to Instruction Leaflet IL047019ZU for further details

Standards and Certifications

- All operators and components are IEC/EN 60947 VDE 0660
- All M30 flat operators (for enclosed type devices or flat-front surface mounted devices only) are environmentally rated as Type 1, 3R, 4X, 12 or 13 UL File #: E29184
- All operators carry an IP66 rating with some rated for washdown environments with IP67 and IP69K
- Marine classification societies: Bureau Veritas (BV), Germanischer Lloyd (GL) and Lloyd's Register of Shipping (LR) approved

M30 Flat Operators Use M22 Contact Blocks and Indicating Lights

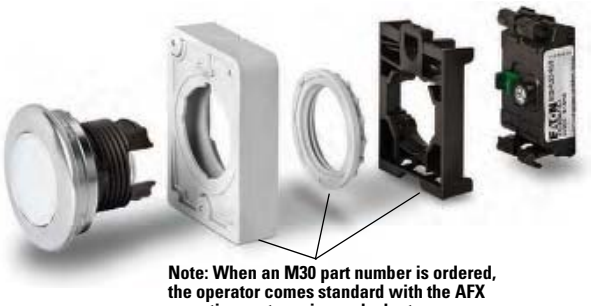

Note: When an M30 part number is ordered, the operator comes standard with the AFX mounting system, ring and adapter.

M22-LED-W

M22-FLED-_

Light Units ①

Terminal Type	LED Color	Light Unit Voltage	Catalog Number
Screw	White	12–30 Vac/Vdc	**M22-LED-W**
	Red		**M22-LED-R**
	Green		**M22-LED-G**
	Blue		**M22-LED-B**
Screw	White	85–264 Vac	**M22-LED230-W**
	Red		**M22-LED230-R**
	Green		**M22-LED230-G**
	Blue		**M22-LED230-B**
Spring-cage	White	12–30 Vac/Vdc	**M22-FLED-W**
	Red		**M22-FLED-R**
	Green		**M22-FLED-G**
	Blue		**M22-FLED-B**
	Red/Green/ Yellow	24 Vdc	**M22-FLED-RG** ②
	Red, Green, Blue, Yellow, White, Violet, Turquoise		**M22-FLED-RGB** ②

M22-K10

M22-FK01

Contact Blocks ①

Terminal Type	Contact Configuration ③	Catalog Number
Screw	NO	**M22-K10**
	NO, early-make	**M22-K10P**
	NC	**M22-K01**
	NC, late-break	**M22-K01D**
Spring-cage	NO	**M22-CK10**
	NC	**M22-CK01**
	NC, late-break	**M22-CK01D**
	2NO	**M22-CK20**
	2NC	**M22-CK02**
	NO-NC	**M22-CK11**
	NC	**M22-FK01** ④
	NO	**M22-FK10** ④

Notes

① For complete listing of available light units and contact blocks, see Accessories, **Pages V7-T1-105** to **V7-T1-112**.

② Please see color input key on **Page V7-T1-108**.

③ All NC contact blocks are positively driven contact. ⊖

④ Additional contacts may not be stacked behind M22-F type contact blocks, M22-F can be stacked behind standard M22 contacts only.

1

System Overview

Global Modular 30 mm Pilot Devices—M30 Flat Operators

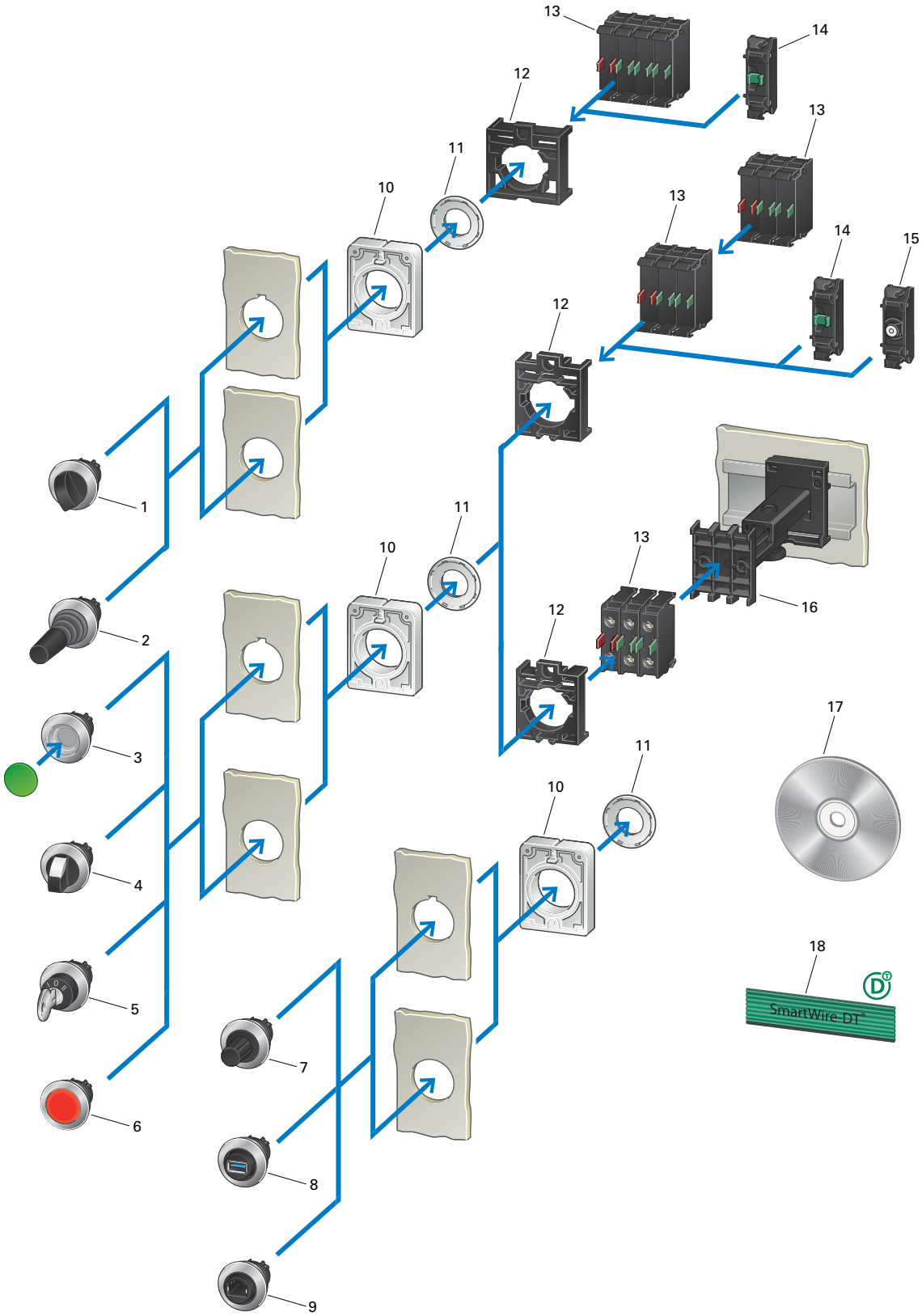

Global Modular 30 mm Pilot Devices—M30 Flat Operators (Legend)

Item	Description
1	**M30 4-Way Selector Switches** 4-positions With rotary head or thumb-grip 0-1-0-2-0-3-0-4 maintained action See **Page V7-T1-173**
2	**M30 Joysticks** 2- or 4-positions See **Page V7-T1-177**
3	**M30 Pushbuttons** Momentary and maintained Flush Colors: White, green, red, yellow, blue, black Illuminated pushbutton actuators Colors: White, green, red, yellow, blue, orange See **Page V7-T1-172**
4	**M30 Selector Switches** 2- and 3-positions With rotary head, thumb-grip Programmable maintained/momentary action Illuminated selector switches with transparent thumb-grip Colors: White, green, red, yellow, blue See **Page V7-T1-173**
5	**M30 Key-Operated Buttons** For individual lock mechanisms 2- or 3-positions Programmable momentary/maintained action and key withdraw Suitable for master key systems See **Page V7-T1-174**
6	**M30 Indicator Lights** Colors: White, green, red, yellow, blue, orange See **Page V7-T1-177**
7	**SmartWire-DT Encoders, M30 Potentiometers** Resistances of 1 kΩ–1 MΩ Three individual connections See **Page V7-T1-179**
8	**M30 Panel Mount Connectors** USB 3.0
9	**M30 Panel Mount Connectors** RJ45

Item	Description
10	**Blanking Plugs** See **Page V7-T1-180**
11	**RMQ-AFX** Anti-rotation tab Included with the equipment supplied with M30 front elements
12	**Threaded Rings** See **Pages V7-T1-116** and **V7-T1-117**
13	**Mounting Adapters** For flush mounting For contact and LED elements See **Page V7-T1-181**
14	**Traditional and flat contact blocks** M30 flat operators are compatible with M22 traditional and flat contact blocks N/C and N/O Universal contacts suitable for use with electronic devices Safety function implemented with positive opening as defined in IEC/EN 60947-5-1 Traditional contact blocks: 2 levels See **Page V7-T1-112**
15	**Traditional and flat LED indicating lights** Cage clamp with push-in terminals M30 flat operators are compatible with M22 traditional and flat indicating lights See **Page V7-T1-113** and **V7-T1-114**
16	**Telescopic Clip** For adjusting the depth of rear mounting devices in CI and CI-K enclosures and cabinets See **Pages V7-T1-117** and **V7-T1-125**
17	**Convenient Labeling** A laser inscription with any text and/or symbol can be added to illuminated and non-illuminated pushbuttons. When ordering, specify inscription per catalog number suffix from the Symbols Library. See **Pages V7-T1-129** through **V7-T1-136**
18	**SmartWire-DT** **Product Characteristics** • Clip-fit assembly modular system • Metal bezel, flus • Mounting hole diameter: 30.5 mm • Minimum grid dimension: 40 x 50 mm • Min. degree of protection: IP66 • Up to 6 contacts per mounting location • For switching differing potential • Approved throughout the world

1

Product Selection

M30—Pushbuttons

IP67, IP69K—Metal Bezel—Flush
Front Dimensions: 36 mm Diameter
NEMA Type 1, 3R, 4X, 12 or 13

M30C-FD-

Button Plate	Std. Pack	Catalog Number
Momentary ①②		
	1 unit	**M30C-FD-S**
		M30C-FD-W
		M30C-FD-R
		M30C-FD-G
		M30C-FD-Y
		M30C-FD-B
		M30C-FD-GR
		M30C-FD-S-X0
		M30C-FD-W-X1
		M30C-FD-W-X11
		M30C-FD-R-X0
		M30C-FD-G-X1
		M30C-FD-B-X217
		M30C-FD-GR-X66
Custom		**M30C-FD-ETCH** ③
Without button plate	1 unit	**M30C-FD-X**

M30C-FD-X

M30C-FDR-S

Button Plate	Std. Pack	Catalog Number
Maintained ①②		
	1 unit	**M30C-FDR-S**
		M30C-FDR-W
		M30C-FDR-R
		M30C-FDR-G
		M30C-FDR-Y
		M30C-FDR-B
		M30C-FDR-S-X0
		M30C-FDR-W-X1
		M30C-FDR-R-X0
		M30C-FDR-G-X1
Custom		**M30C-FDR-ETCH** ③
Without button plate	1 unit	**M30C-FDR-X**

M30C-FDR-X

Notes

① Maintained/momentary action can be changed on device.
② Includes contact block mounting adapter.
③ When ordering, specify inscription per catalog number suffix from the Symbols Library (see **Pages V7-T1-123** to **V7-T1-130**).

M30—Selector Switches

IP64, Metal Bezel

Front dimensions: 36 mm diameter
NEMA Type 1, 3R, 4X, 12 or 13
Maintained/momentary action can be changed with M22-XC-Y configuration adapters

Action
= Momentary (MO)
= Maintained (MA)

	Action	Button Plate	Std. Pack	Catalog Number
With Rotary Head	**Two-Position**			
	40°		1 unit	**M30C-FW**
	60°			**M30C-FWR**
		AUTO HAND		**M30C-FWR-X91**
				M30C-FWR-X92
With Thumb-Grip	40°		1 unit	**M30C-FWK**
	60°			**M30C-FWRK**
With Thumb-Grip	60°		1 unit	**M30C-FWKV**
With Rotary Head	**Three-Position** ①			
	40° 40°		1 unit	**M30C-FW**
	60° 60°			**M30C-FWR3**
				M30C-FWR3-X7
				M30C-FWR3-X94
With Thumb-Grip	40° 40°		1 unit	**M30C-FWK3**
	60° 60°			**M30C-FWRK3**
	Selectable	Maintained, return from left 40° 0 40° 60° 0 60°		**M30C-FWRK3-1**
		Maintained, return from right 40° 0 40° 60° 0 60°		**M30C-FWRK3-2**
With Rotary Head	**Four-Position** ②③			
	0 1 0 2 0 3 0 4		1 unit	**M30C-FWR4**
With Thumb-Grip	0 1 0 2 0 3 0 4			**M30C-FWRK4**

Notes
① With plunger bridge for middle contact.
② Not compatible with configuration adapters.
③ Use M22-A4 mounting adapter, see **Page V7-T1-180**.

1

M30—Key-Operated Buttons

Key-Operated Buttons for Individual Lock Mechanisms

IP64, Metal Bezel
Front dimensions: 36 mm diameter
NEMA Type 1, 3R, 4X, 12 or 13
Maintained/momentary action can be changed with M22-XC-Y configuration adapters
Key withdraw can be changed with M22-XC-… configuration adapters

Two-Position

Two-Position (Ronis 455)

Action (= Momentary (MO); = Maintained (MA))	Lock Mechanism	Key Withdrawable at Position			Equipment Supplied	Key Code	Std. Pack	Catalog Number
Two-Position								
40°	—	0	—	—	With one key	MS1	1 unit	**M30C-FWS**
						MS2		**M30C-FWS-MS2**
						MS3		**M30C-FWS-MS3**
						MS4		**M30C-FWS-MS4**
						MS5		**M30C-FWS-MS5**
						MS6		**M30C-FWS-MS6**
						MS7		**M30C-FWS-MS7**
						MS8		**M30C-FWS-MS8**
60°	—	0	—	I		MS1		**M30C-FWRS**
						MS2		**M30C-FWRS-MS2**
						MS3		**M30C-FWRS-MS3**
						MS4		**M30C-FWRS-MS4**
						MS5		**M30C-FWRS-MS5**
						MS6		**M30C-FWRS-MS6**
						MS7		**M30C-FWRS-MS7**
						MS8		**M30C-FWRS-MS8**
						MS10		**M30C-FWRS-MS10**
	—	0	—	—		MS1		**M30C-FWRS-A1**
						MS2		**M30C-FWRS-MS2-A1**
						MS3		**M30C-FWRS-MS3-A1**
						MS4		**M30C-FWRS-MS4-A1**
						MS5		**M30C-FWRS-MS5-A1**
						MS6		**M30C-FWRS-MS6-A1**
						MS7		**M30C-FWRS-MS7-A1**
						MS8		**M30C-FWRS-MS8-A1**
						MS10		**M30C-FWRS-MS10-A1**
	—	I	—	II		MS1		**M30C-FWRS-X95**
60°	Ronis 455	0	—	I	With two keys	MS1	1 unit	**M30C-FWRS-RS**
	Ronis 455	0	—	—		MS1		**M30C-FWRS-RS-A1**

IP64, Metal Bezel, continued

Front dimensions: 36 mm diameter
NEMA Type 1, 3R, 4X, 12 or 13
Maintained/momentary action can be changed with M22-XC-Y configuration adapters
Key withdraw can be changed with M22-XC-… configuration adapters

Three-Position

Action = Momentary (MO) = Maintained (MA)	Lock Mechanism	Key Withdrawable at Position			Equipment Supplied	Key Code	Std. Pack	Catalog Number
Three-Position								
40° 40°	—	0	—	—	With one key	MS1	1 unit	**M30C-FWS3**
						MS2		**M30C-FWS3-MS2**
						MS3		**M30C-FWS3-MS3**
						MS4		**M30C-FWS3-MS4**
						MS5		**M30C-FWS3-MS5**
						MS6		**M30C-FWS3-MS6**
						MS7		**M30C-FWS3-MS7**
						MS8		**M30C-FWS3-MS8**
60° 60°	Selectable	—	Selectable	—		MS1		**M30C-FWRS3-MS1-A1**
						MS2		**M30C-FWRS3-MS2-A1**
						MS3		**M30C-FWRS3-MS3-A1**
						MS4		**M30C-FWRS3-MS4-A1**
						MS5		**M30C-FWRS3-MS5-A1**
						MS6		**M30C-FWRS3-MS6-A1**
						MS7		**M30C-FWRS3-MS7-A1**
						MS8		**M30C-FWRS3-MS8-A1**
	—	—	Selectable	—		MS1		**M30C-FWRS3-MS1-A2**
						MS2		**M30C-FWRS3-MS2-A2**
						MS3		**M30C-FWRS3-MS3-A2**
						MS4		**M30C-FWRS3-MS4-A2**
						MS5		**M30C-FWRS3-MS5-A2**
						MS6		**M30C-FWRS3-MS6-A2**
						MS7		**M30C-FWRS3-MS7-A2**
						MS8		**M30C-FWRS3-MS8-A2**
	—	—	Selectable	—		MS1		**M30C-FWRS3-MS1-A3**
						MS2		**M30C-FWRS3-MS2-A3**
						MS3		**M30C-FWRS3-MS3-A3**
						MS4		**M30C-FWRS3-MS4-A3**
						MS5		**M30C-FWRS3-MS5-A3**
						MS6		**M30C-FWRS3-MS6-A3**
						MS7		**M30C-FWRS3-MS7-A3**
						MS8		**M30C-FWRS3-MS8-A3**
	—	—	Selectable	—		MS1		**M30C-FWRS3-MS1-A4**
						MS2		**M30C-FWRS3-MS2-A4**
						MS3		**M30C-FWRS3-MS3-A4**
						MS4		**M30C-FWRS3-MS4-A4**
						MS5		**M30C-FWRS3-MS5-A4**
						MS6		**M30C-FWRS3-MS6-A4**
						MS7		**M30C-FWRS3-MS7-A4**
						MS8		**M30C-FWRS3-MS8-A4**

IP64, Metal Bezel, continued

Front dimensions: 36 mm diameter
NEMA Type 1, 3R, 4X, 12 or 13
Maintained/momentary action can be changed with M22-XC-Y configuration adapters
Key withdraw can be changed with M22-XC-… configuration adapters

Three-Position

Action (> = Momentary (MO); ⌊ = Maintained (MA))	Lock Mechanism	Key Withdrawable at Position		Equipment Supplied	Key Code	Std. Pack	Catalog Number
Three-Position, continued							
60° ⇓ 60°	Selectable	—	Selectable —	With one key	MS1	1 unit	**M30C-FWRS3-MS1-A5**
					MS2		**M30C-FWRS3-MS2-A5**
					MS3		**M30C-FWRS3-MS3-A5**
					MS4		**M30C-FWRS3-MS4-A5**
					MS5		**M30C-FWRS3-MS5-A5**
					MS6		**M30C-FWRS3-MS6-A5**
					MS7		**M30C-FWRS3-MS7-A5**
					MS8		**M30C-FWRS3-MS8-A5**
	—	—	Selectable —		MS1		**M30C-FWRS3-MS1-A6**
					MS2		**M30C-FWRS3-MS2-A6**
					MS3		**M30C-FWRS3-MS3-A6**
					MS4		**M30C-FWRS3-MS4-A6**
					MS5		**M30C-FWRS3-MS5-A6**
					MS6		**M30C-FWRS3-MS6-A6**
					MS7		**M30C-FWRS3-MS7-A6**
					MS8		**M30C-FWRS3-MS8-A6**
	—	—	Selectable —		MS1		**M30C-FWRS3-MS1-A7**
					MS2		**M30C-FWRS3-MS2-A7**
					MS3		**M30C-FWRS3-MS3-A7**
					MS4		**M30C-FWRS3-MS4-A7**
					MS5		**M30C-FWRS3-MS5-A7**
					MS6		**M30C-FWRS3-MS6-A7**
					MS7		**M30C-FWRS3-MS7-A7**
					MS8		**M30C-FWRS3-MS8-A7**

Three-Position (Ronis 455)

60° ⇓ 60°	Ronis 455	0	—	—	With two keys	—	1 unit	**M30C-FWRS3-RS**
						—		**M30C-FWRS3-RS-A1**

Two- or Three-Position

Two- or Three-Position							
60° ⇓ 60°	—	—	Selectable —	With two keys	MS1	1 unit	**M30C-FWRS3-A1**
					MS2		**M30C-FWRS3-A2**
					MS3		**M30C-FWRS3-A3**
					MS4		**M30C-FWRS3-A4**
					MS5		**M30C-FWRS3-A5**
					MS6		**M30C-FWRS3-A6**
					MS7		**M30C-FWRS3-A7**
					MS10		**M30C-FWRS3-A10**

M30—Joysticks, Indicator Lights and Illuminated Operators

Joystick

Joysticks—IP66, Metal Bezel

With one operating point per operating direction
NEMA Type 1, 3R, 4X, 12 or 13
With metal shaft
Front dimensions: 36 mm diameter

Description	Action ⟩ = Momentary (MO) ⟌ = Maintained (MA)	Std. Pack	Catalog Number
Two-position	—	1 unit	**M30C-FWRJS2H**
Three-position	|		**M30C-FWRJS2V**
Four-position	◇		**M30C-FWJS4**

Indicator Lights

Indicator Lights—IP67, Metal Bezel

Front dimensions: 36 mm diameter
NEMA Type 1, 3R, 4X, 12 or 13

Lens	Std. Pack	Catalog Number
○	1 unit	**M30C-FL-W**
●		**M30C-FL-R**
●		**M30C-FL-G**
●		**M30C-FL-Y**
●		**M30C-FL-B**
●		**M30C-FL-A**

Illuminated Pushbuttons

Momentary

IP67, IP69K, Metal Bezel, Flush

Front dimensions: 36 mm diameter
NEMA Type 1, 3R, 4X, 12 or 13

Button Plate	Std. Pack	Catalog Number
○	1 unit	**M30C-FDL-W**
●		**M30C-FDL-R**
●		**M30C-FDL-G**
●		**M30C-FDL-Y**
●		**M30C-FDL-B**
●		**M30C-FDL-A**
◎		**M30C-FDL-W-X0**
I		**M30C-FDL-W-X1**
◇		**M30C-FDL-W-X100**
◎		**M30C-FDL-R-X0**
I		**M30C-FDL-G-X1**
▭		**M30C-FDL-G-X32**
⏻		**M30C-FDL-Y-X162**
Custom		**M30C-FDL-ETCH** ①
Without button plate	1 unit	**M30C-FDL-X**

Momentary

Maintained

IP67, IP69K, Metal Bezel, Flush

Front dimensions: 36 mm diameter
NEMA Type 1, 3R, 4X, 12 or 13

Button Plate	Std. Pack	Catalog Number
○	1 unit	**M30C-FDRL-W**
●		**M30C-FDRL-R**
●		**M30C-FDRL-G**
●		**M30C-FDRL-Y**
●		**M30C-FDRL-B**
●		**M30C-FDRL-A**
◎		**M30C-FDRL-W-X0**
I		**M30C-FDRL-W-X1**
◎		**M30C-FDRL-R-X0**
I		**M30C-FDRL-G-X1**
Custom		**M30C-FDRL-ETCH** ①
Without button plate	1 unit	**M30C-FDRL-X**

Maintained

Note

① When ordering, specify inscription per catalog number suffix from the Symbols Library (see **Pages V7-T1-123** to **V7-T1-130**).

1

Illuminated Selector Switches

IP64, Metal Bezel, with Thumb-Grip

Front dimensions: 36 mm diameter
NEMA Type 1, 3R, 4X, 12 or 13
Maintained/momentary action can be changed with M22-XC-Y configuration adapters

Momentary

Action (= Momentary (MO); = Maintained (MA))	Button Plate	Std. Pack	Catalog Number
Two-Position			
40°		1 unit	**M30C-FWLK-W**
			M30C-FWLK-R
			M30C-FWLK-G
			M30C-FWLK-Y
			M30C-FWLK-B
60°		1 unit	**M30C-FWRLK-W**
			M30C-FWRLK-R
			M30C-FWRLK-G
			M30C-FWRLK-Y
			M30C-FWRLK-B

Momentary

Action (= Momentary (MO); = Maintained (MA))	Button Plate	Std. Pack	Catalog Number
Two-Position (V-Configuration)			
60°		1 unit	**M30C-FWLKV-W**
			M30C-FWLKV-R
			M30C-FWLKV-G
			M30C-FWLKV-Y
			M30C-FWLKV-B

IP64, Metal Bezel, with Thumb-Grip

Front dimensions: 36 mm diameter
NEMA Type 1, 3R, 4X, 12 or 13
Maintained/momentary action can be changed with M22-XC-Y configuration adapters

Momentary

Action (= Momentary (MO); = Maintained (MA))	Button Plate	Std. Pack	Catalog Number
Three-Position			
40° 40°		1 unit	**M30C-FWLK3-W**
			M30C-FWLK3-R
			M30C-FWLK3-G
			M30C-FWLK3-Y
			M30C-FWLK3-B
60° 60°		1 unit	**M30C-FWRLK3-W**
			M30C-FWRLK3-R
			M30C-FWRLK3-G
			M30C-FWRLK3-Y
			M30C-FWRLK3-B
Maintained, return from left (0; I 40°; II 40°; 0; I 60°; II 60°)		1 unit	**M30C-FWRLK3-1-W**
			M30C-FWRLK3-1-R
			M30C-FWRLK3-1-G
			M30C-FWRLK3-1-Y
			M30C-FWRLK3-1-B
Maintained, return from right (0; I 40°; II 40°; 0; I 60°; II 60°)		1 unit	**M30C-FWRLK3-2-W**
			M30C-FWRLK3-2-R
			M30C-FWRLK3-2-G
			M30C-FWRLK3-2-Y
			M30C-FWRLK3-2-B

Potentiometers

IP66, Metal Bezel Potentiometer

Three individual screw connections
NEMA Type 1, 3R, 4X, 12 or 13
Resistance accuracy: ±10% (linear) / Rated power P = 0.5 W

Potentiometer

Resistance (R) kOhm	Scale/Inscription	Contact Sequence	Std. Pack	Catalog Number
1	Standard scale/inscription		1 unit	**M30C-FR1K**
4.7				**M30C-FR4K7**
10				**M30C-FR10K**
47				**M30C-FR47K**
100				**M30C-FR100K**
470				**M30C-FR470K**
2.2				**M30C-FR2K2**
22				**M30C-FR22K**
1000				**M30C-FR1M**
1	Without scale/inscription		1 unit	**M30C-FR1K-BLANK**
2.2				**M30C-FR2K2-BLANK**
4.7				**M30C-FR4K7-BLANK**
10				**M30C-FR10K-BLANK**
22				**M30C-FR22K-BLANK**
47				**M30C-FR47K-BLANK**
100				**M30C-FR100K-BLANK**
470				**M30C-FR470K-BLANK**
1000				**M30C-FR1M-BLANK**

IP65, SmartWire-DT Potentiometer

Only in conjunction with M22-SWD-R function element
NEMA Type 1, 3R, 4X, 12 or 13

M22-R-SWD

Bezel	Contact Sequence	Std. Pack	Catalog Number
Silver bezel (M22)		1 unit	**M22-R-SWD**
Metal bezel (flat front)		1 unit	**M30C-FR-SWD**

IP65, SmartWire-DT Encoders

With actuation function
NEMA Type 1, 3R, 4X, 12 or 13
Only in conjunction with M22-SWD-INC function element

M30C-FINC-SWD

Bezel	Contact Sequence	Std. Pack	Catalog Number
Silver bezel (M22)	—	1 unit	**M22-INC-SWD**
Metal bezel (flat front)	—	1 unit	**M30C-FINC-SWD**

Blanking Plugs

Round design, IP67, IP69K
For sealing spare mounting locations

For use with …	Color	Std. Pack	Catalog Number
M22		50 units	**M22-B216388**
		250 units	**M22-B-GVP216389**
		50 units	**M22S-B216390**
		250 units	**M22S-B-GVP216391**
M30		1 unit	**M30C-FB187028**

Technical Data

Global Modular 30 mm Pilot Devices

Description	Unit	Contact Elements M22-(C)K…	M22-FK…	Double Contact Elements M22-CK20/02/11	LED Elements M22(C)-LED…	M22-FLED…	(Illuminated) Pushbuttons, Mushroom Pushbuttons Momentary	Maintained
General								
Standards		IEC/EN 60947-5-1	—	IEC/EN 60947-5-1	IEC/EN 60947-5-1	—	EC/EN 60947-5-1	—
Lifespan, mechanical (operations)	x 10^6	5	1	—	—	—	5	1
Operating frequency (operations)	h	≤ 3600	≤ 3600	≤ 3600	—	—	≤ 3600	≤ 1800
Operating force	N	5	4.5	10	—	—	5	5
Operating torque (screw terminals)	Nm	0.8	—	—	0.8	—	—	—
Degree of protection (IEC/EN 60529)		IP20	IP20	IP20	IP20	IP20	IP67, IP69K	IP67, IP69K
Climatic proofing		Damp heat, constant as defined in IEC 60068-2-7; Damp heat, cyclic as defined in IEC 60068-2-3						
Ambient air temperature, open	°C	–25 to +70	–25 to +70	–25 to +70	–25 to +70	–25 to +70	–25 to +70	–25 to +70
Mounting position		Any	Any	Any	Any	Any	Any	Any
Mechanical shock resistance as defined in IEC 60068-2-27 Shock duration: 11 ms, half sine shock	g	30	50	30	30	50	M22: 30 M30: 15	M22: 30 M30: 15
Terminal capacities								
Solid	mm^2	0.75–2.5	2 x 1 (0.2–1.5) 2 x 1 (0.75–1.5) ①	0.5–1.5	0.75–2.5	1 x 1 (0.2– 1.5) 1 x 1 (0.75–1.5) ①	—	—
Stranded	mm^2	0.5–2.5	—	0.5–1.5	0.5–2.5	1 x 1 (0.2–1.5)	—	—
Flexible with ferrule	mm^2	0.5–1.5	2 x 1 (0.25–1) ②	0.5–1.5	—	1 x 1 (0.25–1) ②	—	—

Notes

① Can be plugged without tools.
② Use WAGO Variocrimp 4 crimping tool; please enquire for others.

Global Modular 30 mm Pilot Devices, continued

Description	Unit	Contact Elements M22-(C)K…	M22-FK…	Double Contact Elements M22-CK20/02/11	LED Elements M22(C)-LED…	M22-FLED…	(Illuminated) Pushbuttons, Mushroom Pushbuttons Momentary	Maintained
Contacts								
Rated impulse withstand voltage (U_{imp})	Vac	6000	4000	—	6000	4000	—	—
Rated insulation voltage (U_i)	V	500	250	—	500	250	—	—
Overvoltage category/ degree of pollution		III/3	III/3	—	III/3	III/3	—	—
Control circuit reliability								
At 24 Vdc/5 mA (failure rate)	H_F	< 10^{-7} ①	—	—	—	—	—	—
At 5 Vdc/1 mA (failure rate)	H_F	< 5 x 10^{-6} ②	—	—	—	—	—	—
Max. short-circuit protective device								
Fuseless (part no.)	A	PKZM0–10/FAZ-B6/1	FAZ-B4	—	—	—	—	—
Fuse (gG/gL)		10	4	—	—	—	—	—
Switching Capacity								
Rated operational current								
AC-15: 24 V I_e	A	—	4	—	—	—	—	—
60 V I_e	A	—	4	—	—	—	—	—
100 V I_e	A	—	2	—	—	—	—	—
115 V I_e	A	6	—	—	—	—	—	—
230 V I_e	A	6	1.5	—	—	—	—	—
400 V I_e	A	4	—	—	—	—	—	—
500 V I_e	A	2	—	—	—	—	—	—
DC-13: 24 V I_e	A	3	1.5	—	—	—	—	—
42 V I_e	A	1.7	—	—	—	—	—	—
60 V I_e	A	1.2	0.8	—	—	—	—	—
110 V I_e	A	0.6 (M22-CK...: 0.8)	0.4	—	—	—	—	—
220 V I_e	A	0.3	0.2	—	—	—	—	—
Lifespan, electrical								
AC-15: 230 V/0.5 A (operations)	x 10^6	1.6	—	—	—	—	—	—
230 V/1.0 A (operations)	x 10^6	1	—	—	—	—	—	—
230 V/3.0 A (operations)	x 10^6	0.7	—	—	—	—	—	—
DC-15: 12 V/2.8 A (operations)	x 10^6	1.2	—	—	—	—	—	—

Notes

① < 10^{-7} (i.e., one failure every 107 operations).

② < 5 x 10^{-6} (i.e., one failure every 5 x 106 operations).

Global Modular 30 mm Pilot Devices, continued

Description	Unit	Double Actuator Pushbuttons	(Illuminated) Selector Switches	Joysticks	Key-Operated Buttons	Indicator Lights Acoustic Devices Potentiometers	Controlled Stop/ Emergency Stop
General							
Standards		IEC/EN 60947-5-1	IEC/EN 60947-5-1	IEC/EN 60947-5-1	IEC/EN 60947-5-1	IEC/EN 60947-5-1	IEC/EN 60947-5-5
Lifespan, mechanical (operations)	x 10^6	0.2	0.1	0.1	0.1	—	0.1
Operating frequency (operations)	h	≤ 3600	≤ 2000	≤ 2000	≤ 100	—	≤ 600
Operating force	N	5	—	5	—	—	50
Operating torque (screw terminals)	Nm	—	0.3	—	0.5	—	—
Degree of protection (IEC/EN 60529)		IP66	M22: IP66 M30: IP64	IP66	M22: IP66 M30: IP64	Indicator lights: IP67 Acoustic devices: IP40 Potentiometers: IP66	IP67, IP69K
Climatic proofing		Damp heat, constant as defined in IEC 60068-2-7; Damp heat, cyclic as defined in IEC 60068-2-3					
Ambient air temperature, open	°C	–25 to +70	–25 to +70	–25 to +70	–25 to +70	–25 to +70	–25 to +70
Mounting position		Any	Any	Any	Any	Any	Any
Mechanical shock resistance as defined in IEC 60068-2-27 Shock duration: 11 ms, half sine shock	g	30	M22: 30 M30: 15	M22: 30 M30: 15	M22: 30 M30: 15	M22: 30 M30: —	50
Terminal capacities							
Solid	mm^2	—	—	—	—	0.5–1.5	—
Stranded	mm^2	—	—	—	—	0.5–1.5	—
Flexible with ferrule	mm^2	—	—	—	—	—	—
Contacts							
Rated impulse withstand voltage (U_{imp})	Vac	—	—	—	—	4000	—
Rated insulation voltage (U_i)	V	—	—	—	—	250	—
Overvoltage category/ degree of pollution		—	—	—	—	III/3	—
Control circuit reliability		—	—	—	—	—	—
At 24 Vdc/5 mA (failure rate)	H_F	—	—	—	—	—	—
At 5 Vdc/1 mA (failure rate)	H_F	—	—	—	—	—	—
Max. short-circuit protective device							
Fuseless (part no.)	A	—	—	—	—	—	—
Fuse (gG/gL)		—	—	—	—	—	—
Switching Capacity							
	A	N/A	N/A	N/A	N/A	N/A	N/A

Dimensions

Approximate Dimensions in mm [inches]

M30… with 2 M22-K… Standard Contact Elements

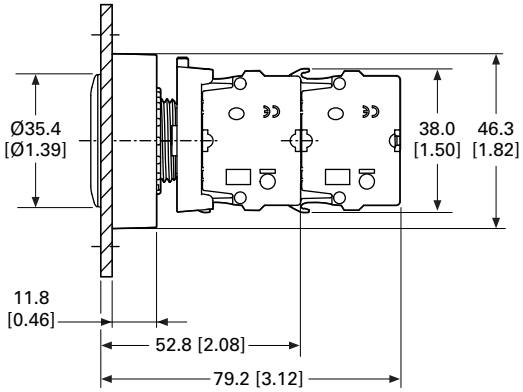

M30… with M22-FK… Flat Rear Contact Elements

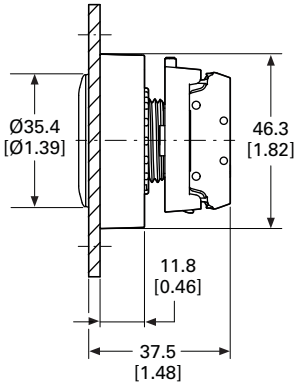

Pushbuttons, Blanking Plug

M30C-FD…, M30C-FB

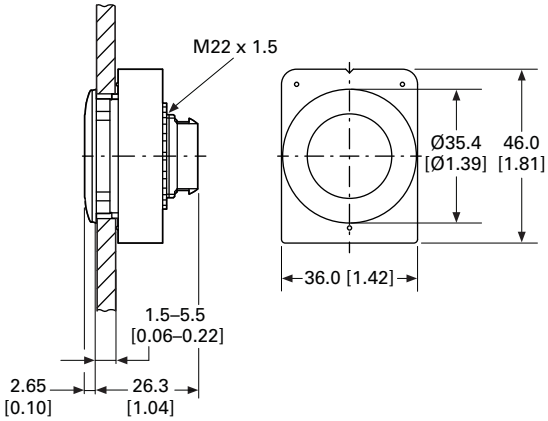

Indicator Lights

M30C-FL…

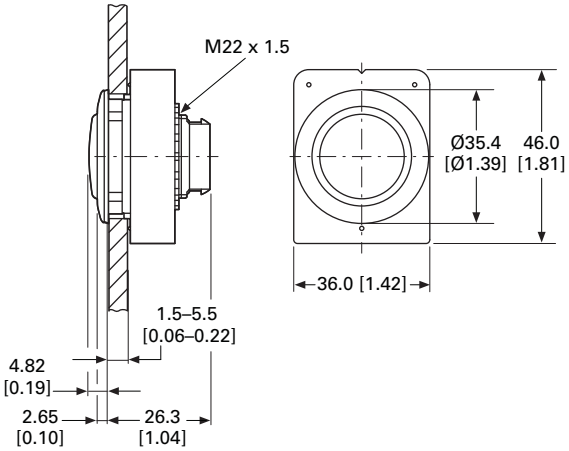

Selector Switches

With Rotary Head M30C-FW…

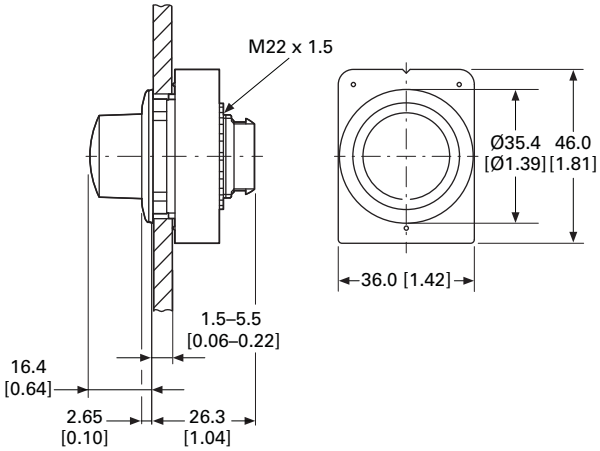

Illuminated Selector Switches

With Thumb-Grip, Four-Way M30C-FW(L)K(V)-…

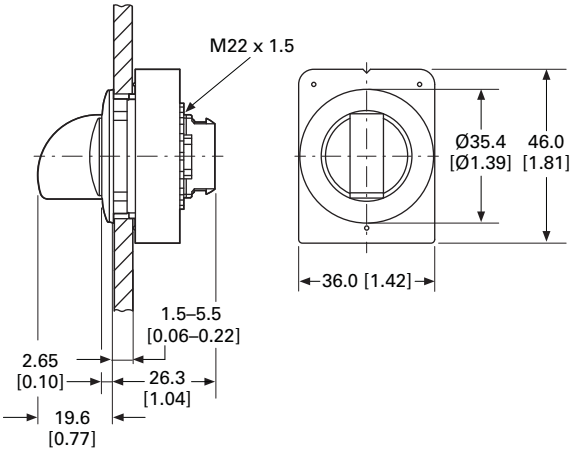

Approximate Dimensions in mm [inches]

Key-Operated Buttons

M30C-FW(R)S(3)-MS…

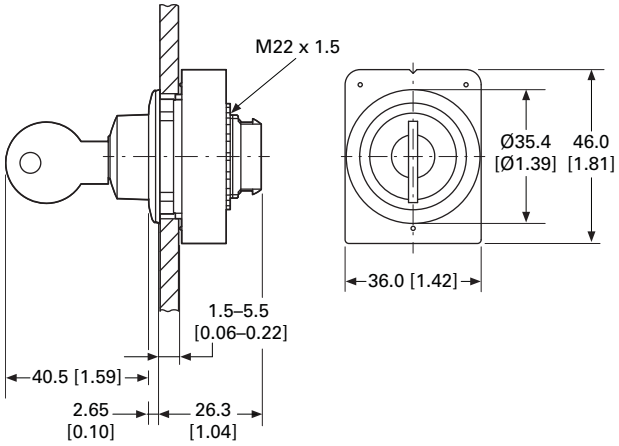

Key-Operated Buttons

M30C-FW(R)S(3)-RS…

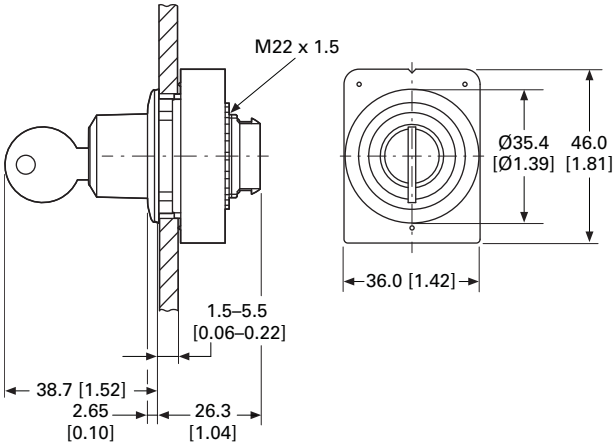

Key-Operated Buttons

M30C-FW(R)S(3)-SA…

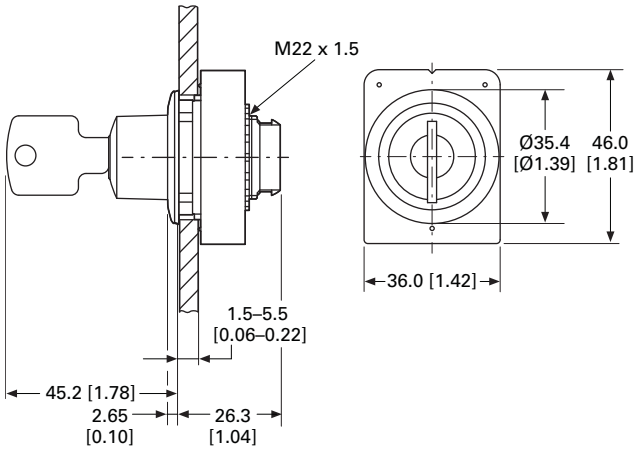

Potentiometers

M30C-FR…

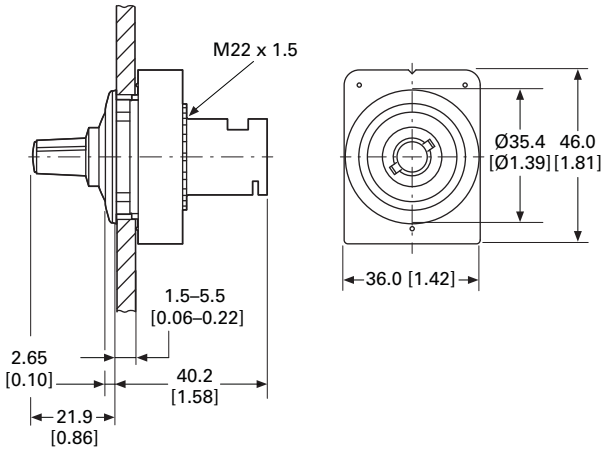

Potentiometers, SmartWire-DT

M30C-FR-SWD

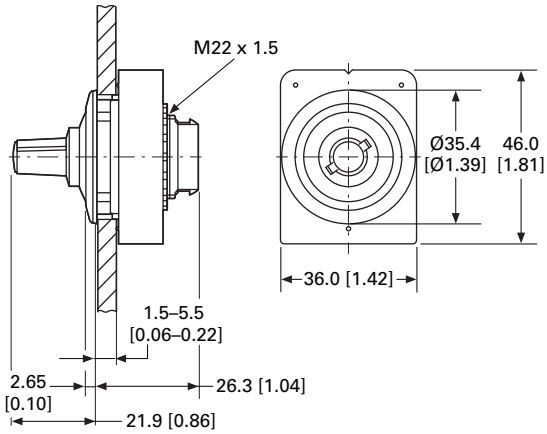

Approximate Dimensions in mm [inches]

Encoders, SmartWire-DT

M30C-FINC-SWD

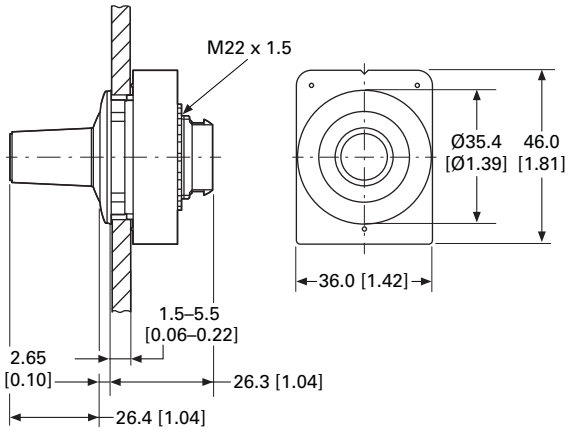

Joysticks

M30C-FW(R)JS…

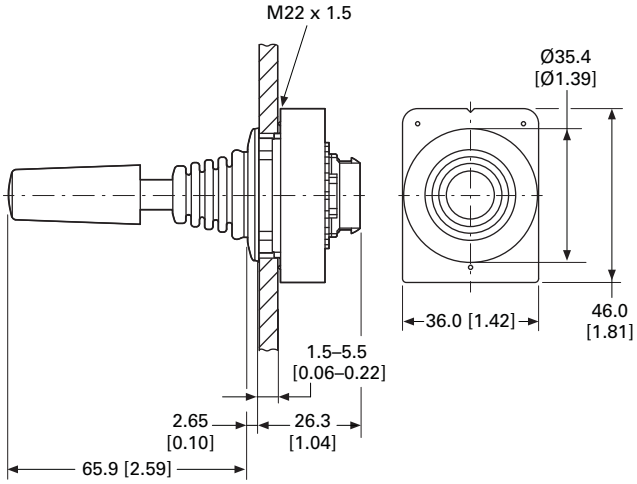

Mounting hole without key slot

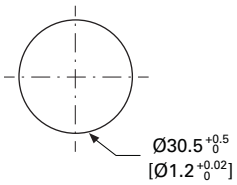

Mounting hole with key slot

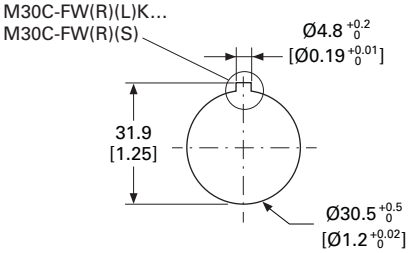

Grid dimensions for various combinations

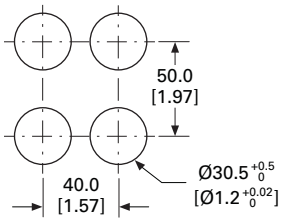

Global Compact 30 mm Pilot Devices —C30 Flat with Pigtail

Contents

Description	*Page*
Global Compact 30 mm Pilot Devices— C30 Flat with Pigtail	
System Overview	**V7-T1-187**
Product Selection	**V7-T1-188**
Technical Data	**V7-T1-192**
Dimensions	**V7-T1-193**

Product Description

The new and modern all-in-one C30 compact and flat 30 mm pilot devices with pigtail integrate the required cable, connector and housing in one single device.

Ability to provide protection up to IP69K at the front and IP65 at the back make these devices the perfect choice for applications where oil-tight protection from dirt and liquid is a must.

Features

Our product offering includes momentary and maintained operators; illuminated and non-illuminated pushbuttons; illuminated and non-illuminated selector switches and indicating lights. C30 pilot devices come with the following pigtail options:

- P5 for 1 m cable with M12
- P32 for 1 m cable with M8
- P62 for 1 m cable with open wire
- P65 for 3.5 m

C30 compact and flat with pigtail 30 mm pilot devices offer modern look and smooth transition between the machine and the operator.

The cable, plug connector and housing are already integrated and permanently installed for plug and play.

C30 pilot devices are also fully assembled for easy stocking and sustainable inventory management.

Standards and Certifications

- All operators and components are IEC/ EN 60947 VDE 0660
- All C30 flat operators (for enclosed type devices or flat-front surface mounted devices only) are environmentally rated as Type 1, 3R, 4X, 12 or 13 UL File #: E29184
- All operators carry an IP66 rating with some rated for washdown environments with IP67 and IP69K
- Marine classification societies: Bureau Veritas (BV), Germanischer Lloyd (GL) and Lloyd's Register of Shipping (LR) approved

System Overview

Global Compact 30 mm Pilot Devices—C30 Flat with Pigtail

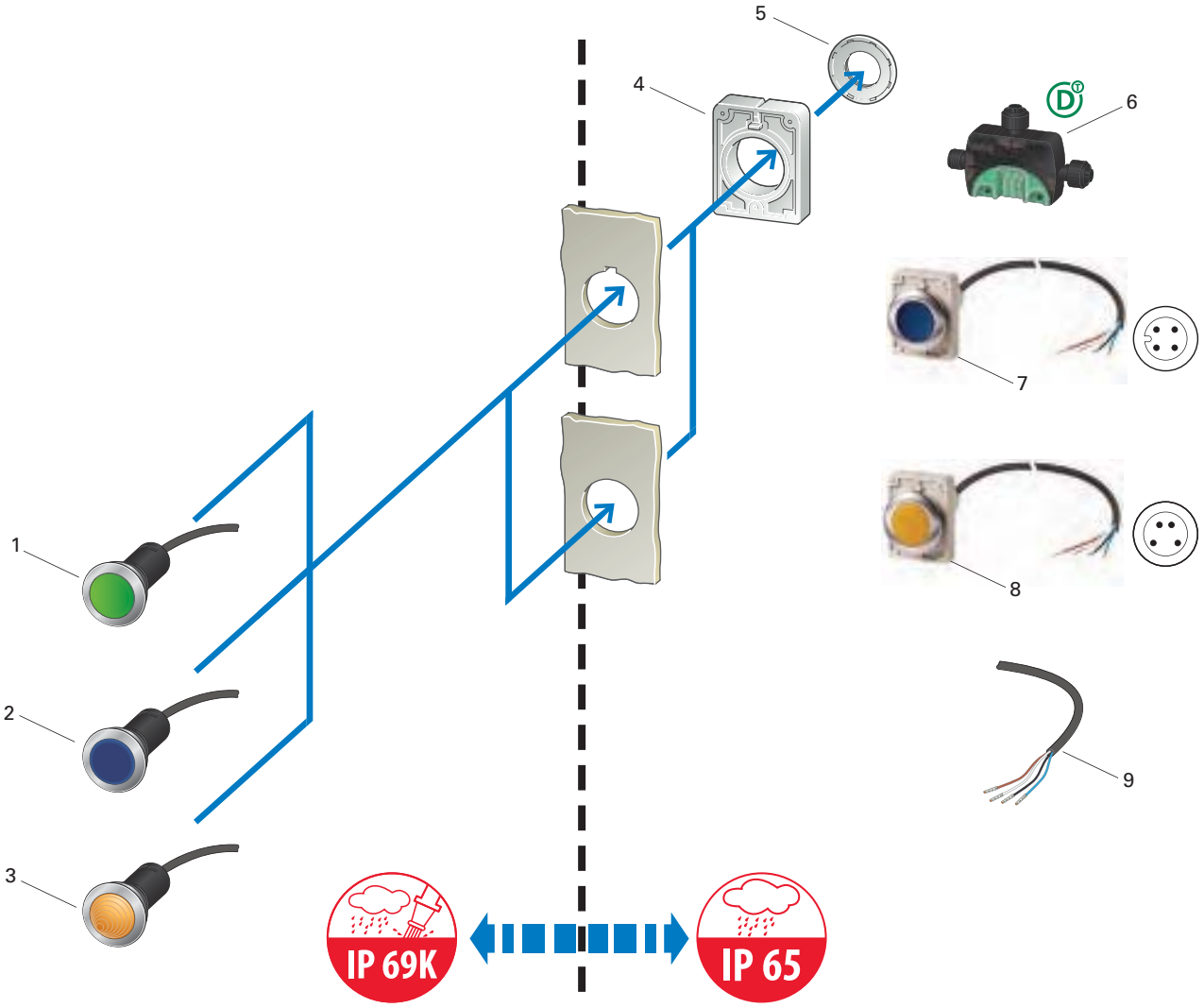

Global Compact 30 mm Pilot Devices—C30 Flat with Pigtail (Legend)

Item	Description
1	**C30 Pushbuttons** Momentary and maintained Flush Colors: white, green, red, black With cable (1.5 or 3 m) and plug (M12A or M8, 4-pole) or unterminated cable end (4-pole) See **Page V7-T1-188**
2	**C30 Illuminated Pushbutton Actuators** Momentary and maintained Flush Colors: white, green, red, blue With cable (1.5 or 3 m) and plug (M12A or M8, 4-pole) or unterminated cable end (4-pole) 24 Vac/Vdc See **Page V7-T1-191**
3	**C30 Indicator Lights** Flush Colors: white, green, red, blue, yellow With cable (1.5 or 3 m) and plug (M12A or M8, 4-pole) or unterminated cable end (4-pole) 24 Vac/Vdc See **Page V7-T1-190**
4	**RMQ-AFX Anti-Rotation Tab** Included with C30 compact devices
5	**Threaded Rings** See **Page V7-T1-110**
6	**SmartWire-DT I/O Module** For connecting digital input/output signals to SmartWire-DT IP67
7	**Cable with M12A Plug, 4-Pole**
8	**Cable with M8A Plug, 4-Pole**
9	**Cable End Open, 4-Pole**

1

Product Selection

Pushbuttons

30 mm Flat Front—Metal Bezel

IP66, IP67, IP69K (at front), IP65 (at rear)
Flush

	Cable Length (m)	Button Plate	Contact Configuration ① NO = Normally Open Contact	NC = Normally Closed Contact	Contact Sequence ②	Contact Diagram	Std. Pack	Momentary Catalog Number	Maintained Catalog Number
Cable (Black) with M12A Plug, 4-Pole	1	Red	—	1NC ⊖	1 4	0 2.2 5.5 Zw = 4.5 mm	1 Unit	**C30C-FD-R-K01-P5**	**C30C-FDR-R-K01-P5**
		Black						**C30C-FD-S-K01-P5**	**C30C-FDR-S-K01-P5**
		Without button plate						**C30C-FD-X-K01-P5**	**C30C-FDR-X-K01-P5**
	1	Green	1NO	—	1 4	0 3.15 5.5	1 Unit	**C30C-FD-G-K10-P5**	**C30C-FDR-G-K10-P5**
		White						**C30C-FD-W-K10-P5**	**C30C-FDR-W-K10-P5**
		Without button plate						**C30C-FD-X-K10-P5**	**C30C-FDR-X-K10-P5**
Cable (Black) with M8 Plug, 4-Pole	1	Red	—	1NC ⊖	1 4	0 2.2 5.5 Zw = 4.5 mm	1 Unit	**C30C-FD-R-K01-P32**	**C30C-FDR-R-K01-P32**
		Black						**C30C-FD-S-K01-P32**	**C30C-FDR-S-K01-P32**
		Without button plate						**C30C-FD-X-K01-P32**	**C30C-FDR-X-K01-P32**
	1	Green	1NO	—	1 4	0 3.15 5.5	1 Unit	**C30C-FD-G-K10-P32**	**C30C-FDR-G-K10-P32**
		White						**C30C-FD-W-K10-P32**	**C30C-FDR-W-K10-P32**
		Without button plate						**C30C-FD-X-K10-P32**	**C30C-FDR-X-K10-P32**

Notes

① ⊖ = Safety function implemented with positive opening as defined in IEC/EN 60947-5-1.

② Contact sequence: ■ = contact closed; □ = contact open.

30 mm Flat Front—Metal Bezel, continued

IP66, IP67, IP69K (at front), IP65 (at rear)
Flush

Cable (Black) with M12A Plug, 4-Pole

Cable Length (m)	Button Plate	Contact Configuration ① NO = Normally Open Contact	NC = Normally Closed Contact	Contact Sequence ②	Contact Diagram	Std. Pack	Momentary Catalog Number	Maintained Catalog Number
1	Red	—	1NC ⊖	BN / BK	0 2.2 5.5; Zw = 4.5 mm	1 Unit	C30C-FD-R-K01-P62	C30C-FDR-R-K01-P62
	Black						C30C-FD-S-K01-P62	C30C-FDR-S-K01-P62
	Without button plate						C30C-FD-X-K01-P62	C30C-FDR-X-K01-P62
			2NC ⊖	BN WH / BK BU	0 2.2 5.5; Zw = 4.5 mm		C30C-FD-X-K02-P62	C30C-FDR-X-K02-P62
		1NO	1NC ⊖	BN WH / BK BU	3.15; 0 2.2 5.5		C30C-FD-X-K11-P62	C30C-FDR-X-K11-P62
	Green	1NO	—	BN / BK	0 3.15 5.5	1 Unit	C30C-FD-G-K10-P62	C30C-FDR-G-K10-P62
	White						C30C-FD-W-K10-P62	C30C-FDR-W-K10-P62
	Without button plate						C30C-FD-X-K10-P62	C30C-FDR-X-K10-P62
		2NO		BN WH / BK BU	0 3.15 5.5		C30C-FD-X-K20-P62	C30C-FDR-X-K20-P62
3.5	Red	—	1NC ⊖	BN / BK	0 2.2 5.5; Zw = 4.5 mm	1 Unit	C30C-FD-R-K01-P65	C30C-FDR-R-K01-P65
	Black						C30C-FD-S-K01-P65	C30C-FDR-S-K01-P65
	Without button plate						C30C-FD-X-K01-P65	C30C-FDR-X-K01-P65
			2NC ⊖	BN WH / BK BU	0 2.2 5.5; Zw = 4.5 mm		C30C-FD-X-K02-P65	C30C-FDR-X-K02-P65
		1NO	1NC ⊖	BN WH / BK BU	3.15; 0 2.2 5.5		C30C-FD-X-K11-P65	C30C-FDR-X-K11-P65
	Green	1NO	—	BN / BK	0 3.15 5.5	1 Unit	C30C-FD-G-K10-P65	C30C-FDR-G-K10-P65
	White						C30C-FD-W-K10-P65	C30C-FDR-W-K10-P65
	Without button plate						C30C-FD-X-K10-P65	C30C-FDR-X-K10-P65
		2NO		BN WH / BK BU	0 3.15 5.5		C30C-FD-X-K20-P65	C30C-FDR-X-K20-P65

Notes

① ⊖ = Safety function implemented with positive opening as defined in IEC/EN 60947-5-1.
② Contact sequence: ■ = contact closed; □ = contact open.

1

Indicating Lights

30 mm Flat Front—Metal Bezel

LED Rated Operating Voltage: 24 Vac/Vdc
IP66, IP67, IP69K (at Front), IP65 (at Rear)

	Connection Type	Cable Length (m)	Lens	LED	Contact Sequence	Std. Pack	Catalog Number
C30C-FL-B-24-P5	Cable (Black) with M12A Plug 4-Pole	1				1 Unit	**C30C-FL-B-24-P5**
							C30C-FL-G-24-P5
							C30C-FL-R-24-P5
							C30C-FL-W-24-P5
							C30C-FL-Y-24-P5
C30C-FL-B-24-P32	Cable (Black) with M8 Plug 4-Pole	1				1 Unit	**C30C-FL-B-24-P32**
							C30C-FL-G-24-P32
							C30C-FL-R-24-P32
							C30C-FL-W-24-P32
							C30C-FL-Y-24-P32
C30C-FL-B-24-P62	Cable (Black) with Unterminated End 4-Pole	1				1 Unit	**C30C-FL-B-24-P62**
							C30C-FL-G-24-P62
							C30C-FL-R-24-P62
							C30C-FL-W-24-P62
							C30C-FL-Y-24-P62
		3.5				1 Unit	**C30C-FL-B-24-P65**
							C30C-FL-G-24-P65
							C30C-FL-R-24-P65
							C30C-FL-W-24-P65
							C30C-FL-Y-24-P65

Illuminated Pushbutton Actuators

30 mm Flat Front—Metal Bezel

LED Rated Operating Voltage: 24 Vac/Vdc
IP66, IP67, IP69K (at Front), IP65 (at Rear)
Flush

	Cable Length (m)	Button Plate	LED	Contact Configuration ① NO = Normally Open Contact	NC = Normally Closed Contact	Contact Sequence ②	Contact Diagram	Std. Pack	Momentary Catalog Number	Maintained Catalog Number
Cable (Black) with M12A Plug, 4-Pole	1			—	1NC ⊖		0 2.2 5.5 Zw = 4.5 mm	1	C30C-FDL-RK01-24P5	C30C-FDRL-RK01-24P5
				1NO	—		0 3.15 5.5		C30C-FDL-BK10-24P5	C30C-FDRL-BK10-24P5
									C30C-FDL-GK10-24P5	C30C-FDRL-GK10-24P5
									C30C-FDL-WK10-24P5	C30C-FDRL-WK10-24P5
Cable (Black) with M8 Plug, 4-Pole	1			—	1NC ⊖		0 2.2 5.5 Zw = 4.5 mm	1	C30C-FDL-RK01-24P32	C30C-FDRL-RK01-24P32
				1NO	—		0 3.15 5.5		C30C-FDL-BK10-24P32	C30C-FDRL-BK10-24P32
									C30C-FDL-GK10-24P32	C30C-FDRL-GK10-24P32
									C30C-FDL-WK10-24P32	C30C-FDRL-WK10-24P32
Cable (Black) with Unterminated End, 4-Pole	1			—	1NC ⊖		0 2.2 5.5 Zw = 4.5 mm	1	C30C-FDL-RK01-24P62	C30C-FDRL-RK01-24P62
				1NO	—		0 3.15 5.5		C30C-FDL-BK10-24P62	C30C-FDRL-BK10-24P62
									C30C-FDL-GK10-24P62	C30C-FDRL-GK10-24P62
									C30C-FDL-WK10-24P62	C30C-FDRL-WK10-24P62
	1			—	1NC ⊖		0 2.2 5.5 Zw = 4.5 mm	1	C30C-FDL-RK01-24P65	C30C-FDRL-RK01-24P65
				1NO	—		0 3.15 5.5		C30C-FDL-BK10-24P65	C30C-FDRL-BK10-24P65
									C30C-FDL-GK10-24P65	C30C-FDRL-GK10-24P65
									C30C-FDL-WK10-24P65	C30C-FDRL-WK10-24P65

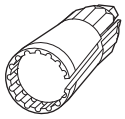

Mounting Ring Tool

Description	Std. Pack	Catalog Number
For threaded ring; can be used with cordless screwdriver.	1 Unit	C22-MS

Notes

① ⊖ = Safety function implemented with positive opening as defined in IEC/EN 60947-5-1.
② Contact sequence: ■ = contact closed; □ = contact open.

1

Technical Data

Global Compact 30 mm Pilot Devices—C30 Flat with Pigtail

Description		Unit	Controlled stop/ emergency switching off buttons	(Illuminated) pushbuttons Momentary/ maintained	Selector switches	Key-operated buttons	Indicator lights
General							
Standards			IEC/EN 60947-5-5 VDE 0660	IEC/EN 60947-5-1 VDE 0660	IEC/EN 60947-5-1 VDE 0660	IEC/EN 60947-5-1 VDE 0660	IEC/EN 60947-5-1 VDE 0660
Lifespan, mechanical	Operations	x 10^6	0.05	5/1	1	0.1	—
Operating frequency	Operations/h		300	3600	2000	100	—
Operating force		N	50	5	—	—	—
Operating torque		Nm	—	—	0.3	0.5	—
Plug tightening torque		Nm	M12 = 1, M8 = 0.6	M12 = 1, M8 = 0.6	M12 = 1, M8 = 0.6	M12 = 1, M8 = 0.6	M12 = 1, M8 = 0.6
Threaded ring tightening torque		Nm	2	2	2	2	2
Climatic proofing							
Damp heat, constant			As defined in IEC 60068-2-78	As defined in IEC 60068-2-78	As defined in IEC 60068-2-78	As defined in IEC 60068-2-78	As defined in IEC 60068-2-78
Damp heat, cyclic			As defined in IEC 60068-2-30	As defined in IEC 60068-2-30	As defined in IEC 60068-2-30	As defined in IEC 60068-2-30	As defined in IEC 60068-2-30
Degree of protection			IP66, IP67, IP69K (at front) IP65 (at rear)	IP66, IP67, IP69K (at front) IP65 (at rear)	IP66, IP67, IP69K (at front) IP65 (at rear)	IP66, IP67, IP69K (at front) IP65 (at rear)	IP66, IP67, IP69K (at front) IP65 (at rear)
Ambient air temperature ①							
Open		°C	–30 – +70	–30 – +70	–30 – +70	–30 – +70	–25 – +70
Storage		°C	–30 – +80	–30 – +80	–30 – +80	–30 – +80	–30 – +80
Mounting position			Any	Any	Any	Any	Any
Mechanical shock resistance for a shock duration of 11 ms		g	>30	>30	>30	>30	>30
Contacts							
Rated impulse withstand voltage	U_{imp}	Vac	M12A/unterminated: 4000 M8: 800	M12A/unterminated: 4000 M8: 800	M12A/unterminated: 4000 M8: 800	M12A/unterminated: 4000 M8: 800	M12A/unterminated: 4000 M8: 800
Rated insulation voltage	U_i	V	M12A/unterminated: 250 M8: 30	M12A/unterminated: 250 M8: 30	M12A/unterminated: 250 M8: 30	M12A/unterminated: 250 M8: 30	M12A/unterminated: 250 M8: 30
Overvoltage category/degree of pollution			III/3	III/3	III/3	III/3	III/3
Control circuit reliability at 17 Vdc/7 mA	HF						
NO (statistically determined)			1 failure per 17 x 10^6 operations	1 failure per 17 x 10^6 operations	1 failure per 17 x 10^6 operations	1 failure per 17 x 10^6 operations	—
NC (statistically determined)			1 failure per 0.9 x 10^6 operations	1 failure per 0.9 x 10^6 operations	1 failure per 0.9 x 10^6 operations	1 failure per 0.9 x 10^6 operations	—
Fuse	gG/gL	A	4	4	4	4	4
Conditional short-circuit current	I_q	kA	1	1	1	1	1
Switching capacity							
Rated operational current	I_e	A					
AC-15: 24 V	I_e	A	4	4	4	4	—
DC-13: 24 V	I_e	A	3	3	3	3	—
Cable characteristics							
Versions			M12A/ unterminated	M12A/M8/ unterminated	M12A/M8/ unterminated	M12A/M8/ unterminated	M12A/M8/ unterminated
Material			PUR	PUR	PUR	PUR	PUR
Diameter	∅	mm	4.7	4.7	4.7	4.7	4.7
Actuator travel and actuation force as per DIN EN 60947-5-1, K.5.4.1			—	—	—	—	—
Positive opening sequence		mm	4.65	4.65	4.65	4.65	—
Maximum travel		mm	5.11	5.7	5.7	5.7	—
Minimum force for positive opening		N	K01 = 15/ K11 = 20/K02 = 34	K01 = 15/ K11 = 20/K02 = 30	K01 = 15/ K11 = 20/K02 = 35	K01 = 15/ K11 = 20/K02 = 36	—

Note

① Applicable for C22 with pigtail options.

Dimensions

Approximate Dimensions in mm [inches]

Pushbuttons, M12A

C30C-FD(R)(L)-…-P5

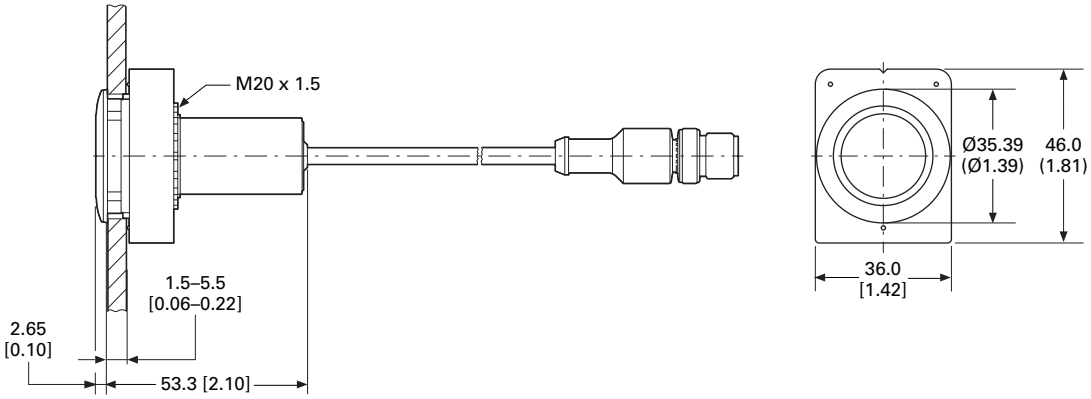

Pushbuttons, M8

C30C-FD(R)(L)-…-P32

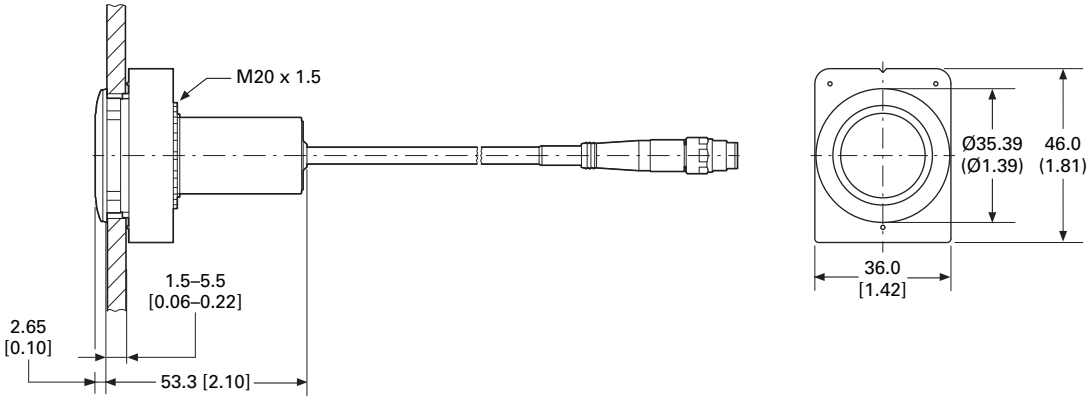

Pushbuttons, Unterminated Cable End

C30C-FD(R)(L)-…-P62/-65

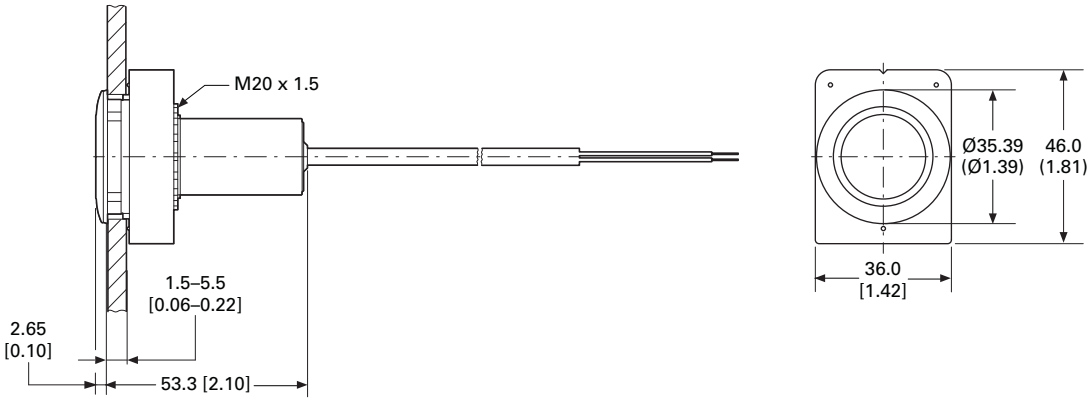

Approximate Dimensions in mm [inches]

Indicator Lights, M12A

C30C-FL-…-P5

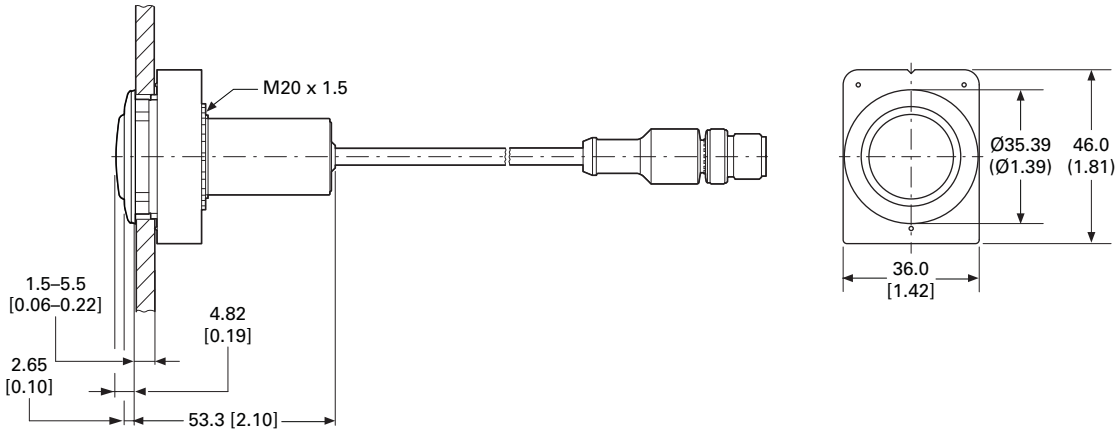

Indicator Lights, M8

C30C-FL-…-P32

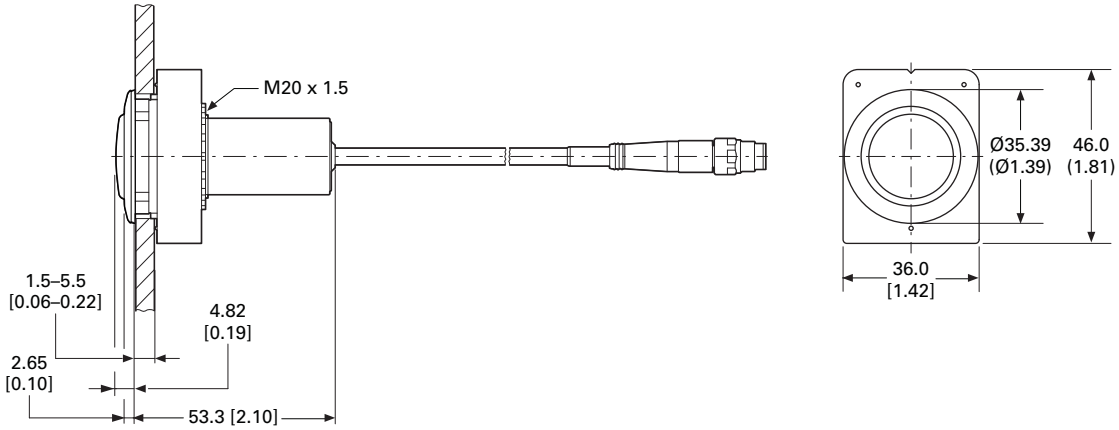

Indicator Lights, Unterminated Cable End

C30C-FL-…-24-P62/-P65

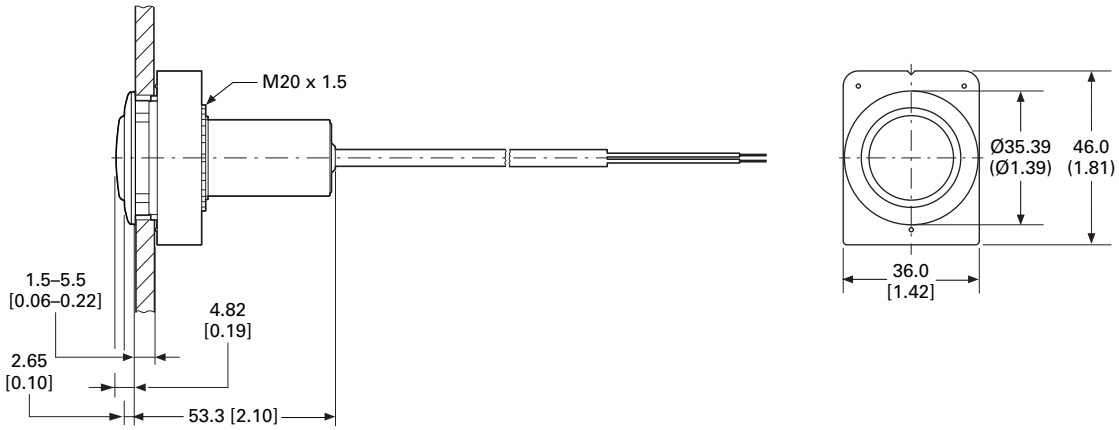

30.5 mm Square Multifunction Watertight/Oiltight—E30

Contents

Description	*Page*
30.5 mm Square Multifunction Watertight/Oiltight—E30	
Product Identification	**V7-T1-196**
Product Selection	
Operators	**V7-T1-197**
Operator Components	**V7-T1-200**
Accessories	**V7-T1-206**
Options	**V7-T1-207**
Replacement Parts	**V7-T1-210**
Technical Data and Specifications	**V7-T1-211**
Dimensions	**V7-T1-212**

Product Description

The E30 industrial pushbutton and indicating light line from Eaton's Electrical Sector features a wide selection of square, multifunction operators which conveniently mount in a standard 30.5 mm (1-13/64 in) diameter panel hole. Up to six input and indicating functions can be grouped into a single operating head, saving valuable panel space. Attractive square operator styling, coupled with custom legending of colored buttons and lenses and many special function accessories, makes E30 components ideally suited for use on control consoles and for a variety of industrial OEM applications.

Features

Type E30 control units consist of a basic operator with one or more buttons and lenses and contact block selection dependent on the specific operator configuration.

- **Pushbutton operators** will accommodate up to four single depth stackable contact blocks behind each operating button, up to eight circuits maximum.
- **Indicating lights** are supplied complete with either a transformer light unit up to 600 Vac supply line voltage or full voltage light unit up to 120 Vac/Vdc supply line voltage.
- **Combination pushbutton with indicating light** operators are supplied complete with a transformer or full voltage unit. Contact blocks must be ordered separately, up to four circuits maximum.

Die Cast Construction

Each operator has high pressure type seals to prevent the passage of oil and other contaminants through the operator into the contact structure or panel interior. Each operator uses a Buna N cork gasket between the mounting flange on the operator and the panel to maintain oiltightness.

Standards and Certifications

- UL Listed—File No. E131568
- CSA Certified—File No. LR68551

Ingress Protection

- Single and dual indicating lights
  - UL (NEMA) Type 1, 2, 3, 3R, 3S, 4, 4X, 12, 13
- All other operators
  - UL (NEMA) Type 3, 3R, 4, 4X, 12, 13

1

Product Identification

30.5 mm Square Multifunction Watertight/Oiltight

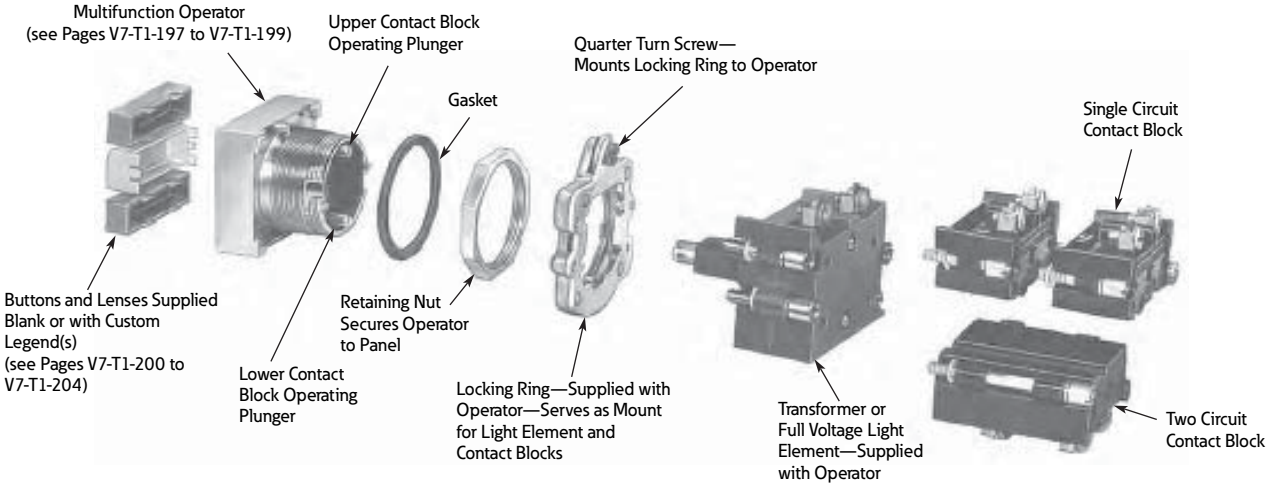

Product Selection

Operators

When Ordering a Complete E30 Control Unit Specify

Catalog Number of …	Ordering Example (E30AB)	
Operator	E30KB130	"START"
Button(s)	E30KB231	"STOP"
Contact block(s)	E30KLA1	1NO
Accessories (if required)	E30KLA2	1NC

Square Multifunction Operators

UL (NEMA) Type 3, 3R, 4, 4X, 12, 13

Single Button Operator

Shown with Extended Button

Single Button Operator/without Button (Order Button Separately)

Button Type Required ①	Operation	Special Features	Catalog Number
	Momentary	—	**E30AA**

Two Button Operator

Shown with Extended Buttons

Two Button Operator/without Buttons (Order Buttons Separately)

Button Types Required ①	Operation Top Button	Bottom Button	Special Features	Catalog Number
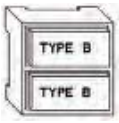	Momentary	Momentary	—	**E30AB**
	Momentary	Momentary	With mechanical interlock	**E30AC**
	Maintained (all contacts)	Release (all contacts)	—	**E30AD** ②
	Maintained (all contacts)	Release (all contacts)	With mechanical interlock	**E30AP** ②③

Two Button Operator

Shown with Long Release Bar

Two Button Operator with Long (OFF) Release Bar—Includes OFF Bar/Button (Order Other Buttons Separately)

Button Types Required ④⑤	Operation Top Button	Bottom Button	Special Features	Catalog Number
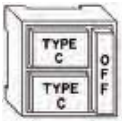	Maintained	Maintained	—	**E30AF**
	Maintained	Maintained	With mechanical interlock	**E30AG**
	Maintained	Momentary	With mechanical interlock	**E30AH**
	Maintained (all contacts)	Maintained (bottom contacts only)	Top button operates both top and bottom contacts	**E30AK** ⑥

Notes

① Order from table on **Page V7-T1-200**.
② Limited to two single circuit, one double circuit 600V or two 120V (E30KLA9) contact blocks behind each button.
③ Buttons are interlocked so that one of the two is maintained at all times.
Depressing the other button releases the maintained button and maintains the depressed button.
④ Operators are supplied as standard with red extended bar(s) marked "OFF" as shown in sketch.
For other colors or markings, contact your nearest Eaton Distributor or call our Customer Service Center 1-800-356-1243.
For replacement of standard red release bar, order **E30KR100.**
⑤ Order from table on **Page V7-T1-201**.
⑥ Limited to two single circuit, one double circuit 600V or two 120V (E30KLA9) contact blocks behind each button.

1

Square Multifunction Operators and Indicating Lights

UL (NEMA) Type 3, 3R, 4, 4X, 12, 13

Two Button Operator with (OFF) Release—Includes OFF Bar/Button(s) (Order Other Buttons Separately)

Two Button Operator

Shown with Release Bar for Top Button

Two Button Operator

Shown with Release Bars for Each Button

Button Types Required ①②	Operation Top Button	Bottom Button	Special Features	Catalog Number
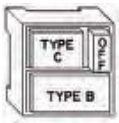	Maintained	Momentary	Release bar for top button	**E30AL**
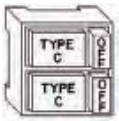	Maintained	Maintained	Individual release bars for each button	**E30AN**
	Maintained with interlock	Maintained with interlock	Individual release bars for each button	**E30AM**

Single Indicating Light Unit

Shown with Lens

Single Indicating Light Unit/without Lens (Order Lens Separately)

Lens Type Required ③	Type of Light Element: Transformer (60/50 Hertz AC) Voltage	Lamp Number ④	Catalog Number	Full Voltage (60/50 Hertz AC or DC) Voltage	Lamp Number ④	Catalog Number
	120	#259	**E30BA**	24	24PSB	**E30BJ**
				120	120PSB	**E30BM**

Dual Indicating Light Unit

Shown with Lens

Dual Indicating Light Unit/without Lenses (Order Lenses Separately)

Lens Types Required ⑤	Type of Light Element: Transformer (60/50 Hertz AC) Voltage	Lamp Number ④	Catalog Number	Full Voltage (60/50 Hertz AC or DC) Voltage	Lamp Number ④	Catalog Number
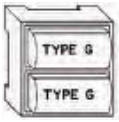	120	6PSB	**E30CA**	24	24PSB	**E30CJ**
				120	120PSB	**E30CM**

Notes

① Order from table on **Page V7-T1-201**.

② Operators are supplied as standard with red extended release bar(s) marked "OFF" as shown in sketch. For other colors or markings, contact your nearest Eaton Distributor or call our Customer Service Center 1-800-356-1243. For replacement of standard red release bar, order **E30KR101**.

③ Order from table on **Page V7-T1-202**.

④ Light units will also accept LED lamps. For LED part numbers, see table on **Page V7-T1-210**.

⑤ Order from table on **Page V7-T1-203**.

UL (NEMA) Type 3, 3R, 4, 4X, 12, 13

Single Button Operator and Indicating Light

Shown with Button and Lens

Single Button Operator with Indicating Light/without Button or Lens (Order Button and Lens Separately)

Button and Lens Types Required ①	Operation (Bottom Button)	Type of Light Element: Transformer (60/50 Hertz AC) Voltage	Lamp Number ②	Catalog Number	Full Voltage (60/50 Hertz AC or DC) Voltage	Lamp Number ②	Catalog Number
	Momentary	120	6PSB	**E30DA**	24	24PSB	**E30DX3**
					120	120PSB	**E30DF**

Single Button Operator with Release Bar and Indicating Light

Shown with Button and Lens

Single Button Operator with (OFF) Release Bar and Indicating Light—Includes OFF Bar/Button (Order Other Button and Lens Separately)

Button and Lens Types Required ①	Operation (Bottom Button)	Type of Light Element: Transformer (60/50 Hertz AC) Voltage	Lamp Number ③	Catalog Number	Full Voltage (60/50 Hertz AC or DC) Voltage	Lamp Number ②	Catalog Number
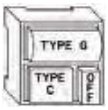	Maintained	120	6PSB	**E30DG**	24	24PSB	**E30DX13**
					120	120PSB	**E30DM**

Two Button Operator with Indicating Light

Shown with Button and Lens

Two Button Operator with Indicating Light/without Buttons or Lens (Order Buttons and Lens Separately)

Button and Lens Types Required ④	Button Operation	Type of Light Element: Transformer (60/50 Hertz AC) Voltage	Lamp Number ②	Catalog Number	Full Voltage (60/50 Hertz AC or DC) Voltage	Lamp Number ②	Catalog Number
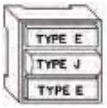	Momentary	120	6PSB	**E30EA**	24	24PSB	**E30EX3**
					120	120PSB	**E30EF**
	Momentary with interlock	120	6PSB	**E30EG**	24	24PSB	**E30EX13**
					120	120PSB	**E30EM**

Two Button Operator with Dual Indicating Lights

Shown with Button and Lens

Two Button Operator with Dual Indicating Lights/without Buttons and Lens

Button and Lens Types Required ①	Button Operation	Type of Light Element: Transformer (60/50 Hertz AC) Voltage	Lamp Number ②	Catalog Number	Full Voltage (60/50 Hertz AC or DC) Voltage	Lamp Number ②	Catalog Number
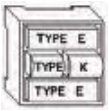	Momentary	120	6PSB	**E30JA**	24	24PSB	**E30JX3**
					120	120PSB	**E30JF**

Notes

① Order from tables on **Pages V7-T1-200** to **V7-T1-204**.

② Light units will also accept LED lamps. For LED part numbers, see table on **Page V7-T1-210**.

③ Operators are supplied as standard with red extended release bar(s) marked "OFF" as shown in sketch. For other colors or markings, contact your nearest Eaton Distributor or call our Customer Service Center 1-800-356-1243. For replacement of standard red release bar, order **E30KR101**.

④ Order from tables on **Pages V7-T1-202** and **V7-T1-203**.

1

Operator Components

Operating Buttons Only

Type A Extended Button

Type A Buttons with Standard Markings ①

Button Application	Color	Marking	Extended Button Catalog Number	Short Button Catalog Number	Color	Marking	Extended Button Catalog Number	Short Button Catalog Number
	Black	Blank	**E30KA100**	**E30KA150**	Green	START	**E30KA330**	**E30KA380**
		START	—	**E30KA180**	Yellow	Blank	**E30KA400**	**E30KA450**
	Red	Blank	**E30KA200**	**E30KA250**	White	Blank	**E30KA500**	**E30KA550**
		EMERG. STOP	**E30KA204**	—	Gray	Blank	**E30KA600**	**E30KA650**
		OFF	**E30KA218**	**E30KA268**	Brown	Blank	**E30KA700**	**E30KA750**
		STOP	**E30KA231**	**E30KA281**	Orange	Blank	**E30KA800**	**E30KA950**
	Green	Blank	**E30KA300**	**E30KA350**	Blue	Blank	**E30KA900**	**E30KA950**

Type B Extended Button

Type B Buttons with Standard Markings ②

Button Application	Color	Marking	Extended Button Catalog Number	Short Button Catalog Number	Color	Marking	Extended Button Catalog Number	Short Button Catalog Number
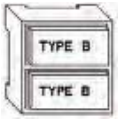	Black	Blank	**E30KB100**	**E30KB150**	Black	REVERSE	**E30KB125**	**E30KB175**
		AUTO	**E30KB101**	**E30KB151**		RUN	**E30KB126**	**E30KB176**
		CLOSE	**E30KB102**	**E30KB152**		SLOW	**E30KB128**	**E30KB178**
		DOWN	**E30KB103**	**E30KB153**		START	**E30KB130**	**E30KB180**
		FAST	**E30KB105**	**E30KB155**		TEST	**E30KB132**	**E30KB182**
		FORWARD	**E30KB107**	**E30KB157**		UP	**E30KB134**	**E30KB184**
		HIGH	**E30KB109**	**E30KB159**	Red	Blank	**E30KB200**	**E30KB250**
		IN	**E30KB110**	**E30KB160**		EMERG. STOP	**E30KB204**	—
		INCH	**E30KB111**	**E30KB161**		OFF	**E30KB218**	**E30KB268**
		JOG	**E30KB112**	**E30KB162**		STOP	**E30KB231**	**E30KB281**
		JOG FOR.	**E30KB113**	**E30KB163**	Green	Blank	**E30KB300**	**E30KB350**
		JOG REV.	**E30KB114**	**E30KB164**		START	**E30KB330**	**E30KB380**
		LOW	**E30KB115**	**E30KB165**	Yellow	Blank	**E30KB400**	**E30KB450**
		LOWER	**E30KB116**	**E30KB166**	White	Blank	**E30KB500**	**E30KB550**
		MAN	**E30KB117**	**E30KB167**		AUTO	**E30KB501**	—
		ON	**E30KB119**	**E30KB169**		HAND	**E30KB508**	—
		OPEN	**E30KB120**	**E30KB170**	Gray	Blank	**E30KB600**	**E30KB650**
		OUT	**E30KB121**	**E30KB171**	Brown	Blank	**E30KB700**	**E30KB750**
		RAISE	**E30KB122**	**E30KB172**	Orange	Blank	**E30KB800**	**E30KB850**
		RESET	**E30KB124**	**E30KB174**	Blue	Blank	**E30KB900**	**E30KB950**

Notes

① Use with operator E30AA, legend characters 3/16 in (4.8 mm) high.

② Use with operators E30AB thru AE, AL and DA thru DF, legend characters 3/16 in (4.8 mm) high.

Type C Extended Button

Type C Buttons with Standard Markings ①

Button Application	Color	Marking	Extended Button Catalog Number	Short Button Catalog Number
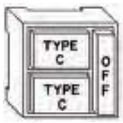	Black	Blank	**E30KC100**	**E30KC150**
		AUTO	**E30KC101**	**E30KC151**
		CLOSE	**E30KC102**	**E30KC152**
		DOWN	**E30KC103**	**E30KC153**
		FAST	**E30KC105**	**E30KC155**
		FORWARD	**E30KC107**	**E30KC157**
		HAND	**E30KC108**	**E30KC158**
		HIGH	**E30KC109**	**E30KC159**
		IN	**E30KC110**	**E30KC160**
		INCH	**E30KC111**	**E30KC161**
		JOG	**E30KC112**	**E30KC162**
		JOG FOR.	**E30KC113**	**E30KC163**
		JOG REV.	**E30KC114**	**E30KC164**
		LOW	**E30KC115**	**E30KC165**
		LOWER	**E30KC116**	**E30KC166**
		MAN	**E30KC117**	**E30KC167**
		ON	**E30KC119**	**E30KC169**
		OPEN	**E30KC120**	**E30KC170**
		OUT	**E30KC121**	**E30KC171**
		RAISE	**E30KC122**	**E30KC172**

Color	Marking	Extended Button Catalog Number	Short Button Catalog Number
Black	RESET	**E30KC124**	**E30KC174**
	REVERSE	**E30KC125**	**E30KC175**
	RUN	**E30KC126**	**E30KC176**
	SLOW	**E30KC128**	**E30KC178**
	START	**E30KC130**	**E30KC180**
	TEST	**E30KC132**	**E30KC182**
	UP	**E30KC134**	**E30KC184**
Red	Blank	**E30KC200**	**E30KC250**
	OFF	**E30KC218**	—
	STOP	**E30KC231**	**E30KC281**
Green	Blank	**E30KC300**	**E30KC350**
	START	**E30KC330**	**E30KC380**
Yellow	Blank	**E30KC400**	**E30KC450**
White	Blank	**E30KC500**	**E30KC550**
Gray	Blank	**E30KC600**	**E30KC650**
Brown	Blank	**E30KC700**	**E30KC750**
Orange	Blank	**E30KC800**	**E30KC850**
Blue	Blank	**E30KC900**	**E30KC950**

Note

① Use with operators E30AF thru AK, AL thru AM and DG thru DM, legend characters 1/8 in (3.2 mm) high.

1

Operating Buttons and Lens Only

Standard Color Buttons and Lens Marking ①

Black lettering on — White, Amber, Yellow and Clear.
White lettering on — Green, Red, Blue, Brown, Black, Orange and Gray.

Type E Button

Type E Buttons with Standard Markings ②

Button Application	Color	Marking	Extended Button Catalog Number	Color	Marking	Extended Button Catalog Number
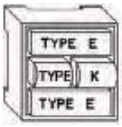	Black	Blank	**E30KE100**	Black	RESET	**E30KE124**
		CLOSE	**E30KE102**		REVERSE	**E30KE125**
		DOWN	**E30KE103**		RUN	**E30KE126**
		FAST	**E30KE105**		SLOW	**E30KE128**
		FORWARD	**E30KE107**		START	**E30KE130**
		HIGH	**E30KE109**		TEST	**E30KE132**
		IN	**E30KE110**		UP	**E30KE134**
		INCH	**E30KE111**	Red	Blank	**E30KE200**
		JOG	**E30KE112**		OFF	**E30KE218**
		JOG FOR.	**E30KE113**		STOP	**E30KE231**
		JOG REV.	**E30KE114**	Green	Blank	**E30KE300**
		LOW	**E30KE115**		START	**E30KE330**
		LOWER	**E30KE116**	Yellow	Blank	**E30KE400**
		ON	**E30KE119**	White	Blank	**E30KE500**
		OPEN	**E30KE120**	Gray	Blank	**E30KE600**
		OUT	**E30KE121**	Brown	Blank	**E30KE700**
		PHASE	**E30KE122**	Orange	Blank	**E30KE800**
				Blue	Blank	**E30KE900**

Type F Lens

Type F Lenses with Standard Markings ③

Button Application	Color	Marking	Catalog Number	Color	Marking	Catalog Number
	Red	Blank	**E30KF10**	Green	OFF	**E30KF22**
		MOTOR RUN	**E30KF11**	Amber	Blank	**E30KF30**
		ON	**E30KF12**	Blue	Blank	**E30KF40**
		POWER ON	**E30KF13**	Clear	Blank	**E30KF50**
	Green	Blank	**E30KF20**	White	Blank	**E30KF60**
		MOTOR STOP	**E30KF21**			
		MOTOR RUN	**E30KF23**			

Notes

① For lenses with special markings or with standard markings but in a different color, refer to instructions on **Pages V7-T1-207** to **V7-T1-209**.
② Use with operators E30EA thru EM, FA thru FM and JA thru JM, legend characters 1/8 in (3.2 mm) high.
③ Use with operators E30BA thru BY, legend characters 3/16 in (4.8 mm) high.

Operating Lens Only

Standard Color Buttons and Lens Marking ①

Black lettering on — White, Amber, Yellow and Clear.
White lettering on — Green, Red, Blue, Brown, Black, Orange and Gray.

Type G Lens

Type G Lenses with Standard Markings ②

Lens Application	Color	Marking	Catalog Number	Color	Marking	Catalog Number
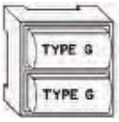	Red	Blank	**E30KG10**	Green	OFF	**E30KG22**
		MOTOR RUN	**E30KG11**		READY	**E30KG23**
		ON	**E30KG12**	Amber	Blank	**E30KG30**
		POWER ON	**E30KG13**	Blue	Blank	**E30KG40**
	Green	Blank	**E30KG20**	Clear	Blank	**E30KG50**
		MOTOR RUN	**E30KG24**	White	Blank	**E30KG60**
		MOTOR STOP	**E30KG21**			

Type J Lens

Type J Lenses with Standard Markings ③

Lens Application	Color	Marking	Catalog Number	Color	Marking	Catalog Number
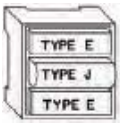	Red	Blank	**E30KJ10**	Green	OFF	**E30KJ22**
		MOTOR RUN	**E30KJ11**		ON	**E30KJ24**
		ON	**E30KJ12**	Amber	Blank	**E30KJ30**
		POWER ON	**E30KJ13**	Blue	Blank	**E30KJ40**
		MOTOR STOP	**E30KJ14**	Clear	Blank	**E30KJ50**
	Green	Blank	**E30KJ20**	White	Blank	**E30KJ60**
		MOTOR STOP	**E30KJ21**			
		MOTOR RUN	**E30KJ23**			

Type K Lenses

Type K Lenses with Standard Markings (Sold in Pairs Only) ④

Lens Application	Color Left Hand Lens	Color Right Hand Lens	Marking Left Hand Lens	Marking Right Hand Lens	Catalog Number
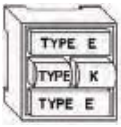	Red	Red	ON	ON	**E30KK12**
		Green	ON	OFF	**E30KK13**
	Green		OFF	OFF	**E30KK22**
		Red	OFF	ON	**E30KK23**

Notes

① For lenses with special markings or with standard markings but in a different color, refer to instructions on **Pages V7-T1-207** to **V7-T1-209**.
② Use with operators E30CA thru CM and DA thru DM, legend characters 3/16 in (4.8 mm) high except MOTOR RUN, POWER ON and MOTOR STOP are 1/8 in (3.2 mm) high.
③ Use with operators E30EA thru EM, FA thru FM and GA thru GM, legend characters 1/8 in (3.2 mm) high.
④ Use with operators E30JA thru JW, legend characters 1/8 in (3.2 mm) high

1

Type K Lenses

Type K Lenses—Blank (Sold in Pairs Only)

Color Left Hand Lens	Right Hand Lens	Catalog Number	Color Left Hand Lens	Right Hand Lens	Catalog Number
Red	Red	**E30KK10**	Blue	Red	**E30KK41**
	Green	**E30KK11**		Green	**E30KK42**
	Amber	**E30KK17**		Amber	**E30KK43**
	Blue	**E30KK14**		Blue	**E30KK40**
	Clear	**E30KK15**		Clear	**E30KK45**
	White	**E30KK16**		White	**E30KK46**
Green	Red	**E30KK21**	Clear	Red	**E30KK51**
	Green	**E30KK20**		Green	**E30KK52**
	Amber	**E30KK27**		Amber	**E30KK53**
	Blue	**E30KK24**		Blue	**E30KK54**
	Clear	**E30KK25**		Clear	**E30KK50**
	White	**E30KK26**		White	**E30KK56**
Amber	Red	**E30KK31**	White	Red	**E30KK61**
	Green	**E30KK32**		Green	**E30KK62**
	Amber	**E30KK30**		Amber	**E30KK63**
	Blue	**E30KK34**		Blue	**E30KK64**
	Clear	**E30KK35**		Clear	**E30KK65**
	White	**E30KK36**		White	**E30KK60**

Contact Blocks

Standard Contact Blocks—Molded, phenolic construction. Enclosed silver contacts with reliability "nibs" that improve the reliability of switching performance under dry circuit, corrosive atmosphere and fine dust conditions. For more extreme conditions, the logic level contact blocks described below are recommended.

Logic Level Contact Blocks—Feature palladium contacts. Palladium, which is more inert than gold, is well suited for voltages and currents approaching zero. When mounted in an enclosure rated for highly corrosive environments, logic level contact blocks can be used where exposure to chemicals may cause failure to other types of materials.

Mounting Limitations

See the contact block mounting limitations for Type E30 pushbutton and combination pushbutton and light operators on this page. Mounting positions 1 thru 8 indicate single depth contact blocks. Each of these positions can represent either a single circuit 600 volt block or a two-circuit 120 volt block. The two-circuit 600 volt block requires two of the numbered positions shown.

Mounting Positions

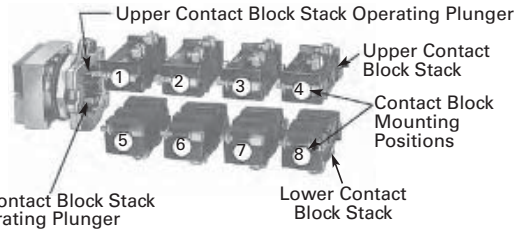

Catalog Number of Operator	Contact Blocks Can Be Mounted in Positions Listed Below: Upper Stack	Lower Stack
E30AA thru **E30AM** ①	1-2-3-4	5-6-7-8
E30BA thru **E30CM**	None	None
E30DA thru **E30DM**	None	5-6-7-8
E30EA thru **E30GM**	2-3-4	6-7-8
E30JA thru **E30JM**	3-4	7-8

Contact Block Selection

Contact Block Type ②

Single Circuit, Screw Terminals

Two Circuit, Screw Terminals

Two Circuit, Quick Connect Terminals

120 Vac Only—Two Circuit

Circuit		Pressure Terminals Standard Catalog Number	Pressure Terminals Logic Level Catalog Number	Quick Connect Terminals ③ Standard Catalog Number
	1NO	**600 Vac, 250 Vdc—Single Circuit**		
		E30KLA1	**E30KLAE1**	**E30KLB1**
	1NC	**E30KLA2**	**E30KLAE2**	**E30KLB2**
	1NO-1NC	**600 Vac, 250 Vdc—Two Circuit**		
		E30KLA3	**E30KLAE3**	**E30KLB3**
	2NO	**E30KLA4**	**E30KLAE4**	**E30KLB4**
	2NC	**E30KLA5**	**E30KLAE5**	**E30KLB5**
Special Contact Operation				
	1NO-1NC Overlapping	**E30KLA6** ④	—	**E30KLB6** ④
	2NO (One early closing)	**E30KLA7** ④	—	**E30KLB7** ④
	2NC (One late opening)	**E30KLA8**	—	**E30KLB8**
	1NO-1NC	**120 Vac Only—Two Circuit**		
		E30KLA9 ⑤	—	**E30KLB9** ⑤

Notes

① Except operator E30AD, AJ or AK which will accommodate contact blocks 1, 2, 5 and 6 only. (See Mounting Positions above.)
② Individually boxed contact blocks master packed 10 per carton.
③ Supplied with non-stacking screws. Limited to 2 contact blocks mounted in positions 1 and 5.
④ Do not use with maintained operators.
⑤ Contacts must be same polarity.

1

Accessories

Accessories

	Description	Color/Type	Catalog Number
E30KR_	**Collar**—Snap on mounting for assembly in the field. Permits color coding of operator heads. Size: 1-19/32 x 1-19/32 x 9/16 in.	Black	**E30KR1**
		Red	**E30KR2**
		Green	**E30KR3**
		Yellow	**E30KR4**
		White	**E30KR5**
		Gray	**E30KR6**
		Orange	**E30KR8**
		Blue	**E30KR9**
		Brown	**E30KR10**
E30KT_ *Full Shroud* *Half Shroud*	**Shroud**—Similar to collar above except for extension above the face of button to prevent accidental actuation of button. Half shroud with an extension on only half the collar may be positioned to protect top or bottom button.	Full shroud (gray)	**E30KT6**
		Half shroud (gray)	**E30KT7**
E30KR3_	**Guard**—Two collars deep, removable slide prevents accidental operation. White slide can be marked with grease pencil.	Red with white slide	**E30KR31**
		Red with clear slide	**E30KR32**
E30KR30	**Terminal Block**—2 terminals, each will accommodate 2-wire terminations.		**E30KR30**
E30KT_	**Padlock Attachment** for locking single button and bottom button of multi-function operators in the depressed position. Locks NC contacts open or early closing NO contacts closed. Cannot be used in conjunction with collar, shroud or boot.	Short button	**E30KT1**
		Extended button	**E30KT2**
E30KT3	**Transparent Boot**—Guards against ingress of foreign material and freezing rain. **Note:** If this boot is used in conjunction with operator types AD or AE, an extended type button must be used in the top position and a short button in the lower position.		**E30KT3** ①
E30KT_	**Square Hole Plug**— Gray enameled		**E30KT4**
	Stainless steel		**E30KT5**
E30KV1	**Lamp and Lens Removal Tool**—Will not fit Cat. No. E30B light units listed on **Page V7-T1-198**.		**E30KV1**
E22CW	**Octagonal Wrench** for mounting operators to panel.		**E22CW**
E30KV2	**Button and Lens Removal Tool**		**E30KV2**

Note

① Color coordinating collars, padlock attachments or legend plates cannot be used with operators equipped with a transparent boot.

Options

Markings and Legend Plates

Buttons or Lenses with Non-Standard Horizontal Markings

Markings not listed as Standard Markings below are considered non-standard. If more than one marking is required on a button or lens, order non-standard markings.

Ordering Instructions

- Specify catalog number of blank button or lens of desired color, plus suffix "STAMP" for non-standard or "STD" for standard markings in order notes. See **Pages V7-T1-200** to **V7-T1-204**.
- Specify size, legend desired and location in order notes by alphas as shown in example.
- Do not exceed maximum number of legend characters per line.

Ordering Example

Green Type B button to be marked with non-standard legend "ALL ELEVATORS DOWN."

Catalog No.: **E30KB300STAMP**
Letter Size: 1/8 in
Pos. A—ALL
Pos. C—ELEVATORS
Pos. F—DOWN

How to Use the Legend Location Figure

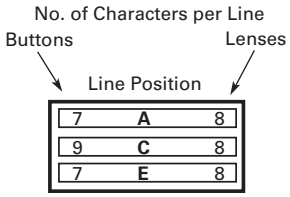

Legend Locations

Type **A** buttons and Type **F** lenses

1/8 in (3 mm) High Char.

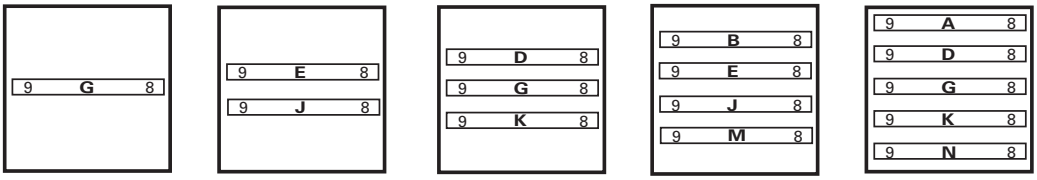

3/16 in (5 mm) High Char.

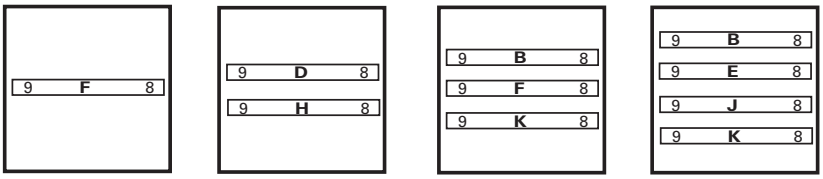

Type **F** lens only

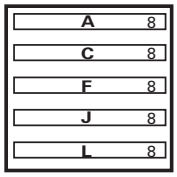

Type **B** buttons and Type **G** lenses

1/8 in (3 mm) High Char.

3/16 in (5 mm) High Char.

Type **C** buttons

1/8 in (3 mm) High Char.

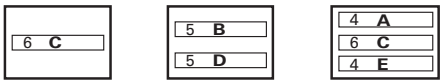

3/16 in (5 mm) High Char.

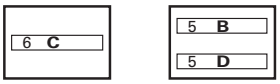

Type **D** buttons

1/8 in (3 mm) High Char.

3/16 in (5 mm) High Char.

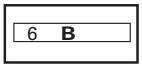

Type **K** buttons

1/8 in (3 mm) High Char.

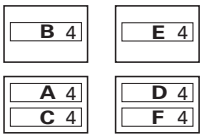

3/16 in (5 mm) High Char.

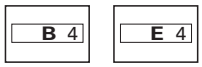

Type **E** buttons and Type **J** lenses

1/8 in (3 mm) High Char.

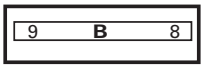

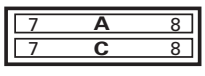

3/16 in (5 mm) High Char.

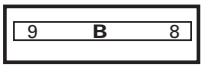

Standard Markings

AUTO	EMERG. STOP	HAND	INCH	JOG REV.	MAN.	OPEN	RESET	SLOW	TEST	MOTOR STOP
CLOSE	FAST	HIGH	JOG	LOW	OFF	OUT	REVERSE	START	UP	POWER ON
DOWN	FORWARD	IN	JOG FOR.	LOWER	ON	RAISE	RUN	STOP	MOTOR RUN	READY

Legend Arrangements and Legend Locations

Legend plates
E30KM1 or KM11

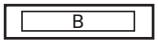

Legend plates
E30KM4 or KM14

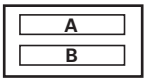

Legend plates
E30KM3 or KM13

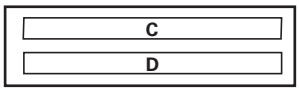

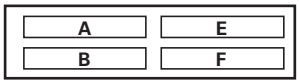

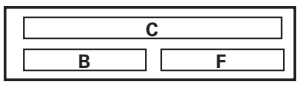

Legend plates
E30KM5 or KM15

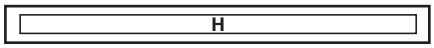

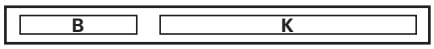

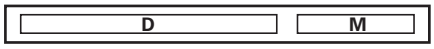

Legend plates
E30KM2 or KM12

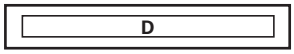

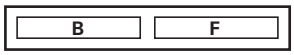

Legend plates
E30KM6 or KM16

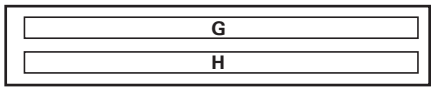

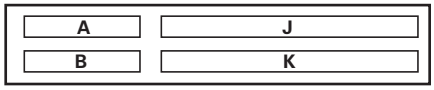

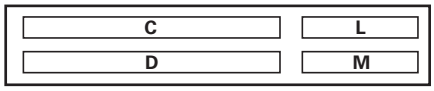

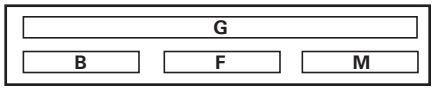

Legend Plates E30KN76 or KN76B

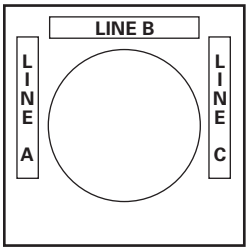

Legend plates
E30KN76 or KN76B
1/8 in character
size only with a maximum
of six characters.

Maximum Number and Size of Permissible Legend Characters of Custom Stamped Legend Plates

		Size and Maximum Number of Characters Per Line								
		One Span			Two Span			Three Span		
Type	**No.of Lines**	**3/32 in (2.5 mm)**	**1/8 in (3 mm)**	**3/16 in (5 mm)**	**3/32 in (2.5 mm)**	**1/8 in (3 mm)**	**3/16 in (5 mm)**	**3/32 in (2.5 mm)**	**1/8 in (3 mm)**	**3/16 in (5 mm)**
Standard	1	13	10	10	30	22	22	47	34	34
Large	1	13	10	10	30	23	23	47	36	36
	2	13	10	10	30	23	23	47	36	36

Characters available for non-standard markings
3/32 in (2.5 mm)—1/8 in (3 mm)—3/16 in (5 mm)

A B C D E F G H I J K L M N O P Q R S T U V W X Y Z	**. / — ,**	**1 2 3 4 5 6 7 8 9 0**

Buttons or Lenses with Non-Standard Vertical Markings

Ordering Instructions

- Specify catalog number of blank button or lens of desired color, selected from listings on **Pages V7-T1-200** to **V7-T1-204**.
- Specify size, legend desired, location and state "vertically marked" in order notes.

Note: Specify either 1/8 or 3/16 in (3.2 or 4.8 mm) character height. Do not exceed maximum number of characters as outlined in table below.

Ordering Example:

Green Type K button to be marked with "RUN" "ON."

Catalog No.: **E30KK20STAMP**
Letter Size: 3/16 in (4.8 mm)
Vertically Marked
Pos. B—RUN
Pos. E—ON

Legend Plates

Legend plates for Type E30 compact pushbutton and indicating light operators hook directly onto the operator and are clamped in place when the operator locking nut behind the panel is secured.

Two and three span plates are designed for use where two or more operators are mounted adjacent to each other **on minimum horizontal mounting centers.** These legend plates mount in the same manner as single span units.

Maximum Number of Characters

Description	Type	Maximum Number of Characters 1/8 in (3.2 mm)	3/16 in (4.8 mm)
Buttons	A	7	5
	B	7	5
	C	4	3
	D	5	3
	E	7	5
Lenses	F	7	5
	G	7	5
	J	7	5
	K	3	2

When Ordering Legend Plates with Markings

- Catalog number of blank legend plate
- Insert the following in order notes:
  - Legends required
  - Size of characters—3/32, 1/8, 3/16 in (2.4, 3.2, 4.8 mm)
  - Positions of legends on one line standard and two line large legend plates by alphas as shown in sketches on following page.

Ordering Example:

Three span legend plate to be marked "MASTER CONTROL", "STATION A" and "STATION B."

Catalog No.: **E30KM3STAMP**
Letter Size: 1/8 in (3.2 mm)
Pos. C—MASTER CONTROL
Pos. B—STATION A
Pos. F—STATION B

Blank Legend Plates and Legend Plates with Markings

	Type	One Span Catalog Number
	Black	
Standard— One Span	Standard	**E30KM1**
Large—One Span	Large	**E30KM4**

1

Replacement Parts

Replacement Light Units for E30 Components

Voltage AC and DC	Part Numbers—Receptacles without Lamps: Single Indicating Light	Dual Indicating Light	Single Light Single Pushbutton	Single Light Dual Pushbutton	Dual Light Dual Pushbutton
Full Voltage Type					
6V	**57-2579-3A**	**57-2568A**	**57-2568A**	**57-2579-3A**	**57-2567**
12V	**57-2579-3A**	**57-2568A**	**57-2568A**	**57-2579-3A**	**57-2567**
18/24V	**57-2579-3A**	**57-2568A**	**57-2568A**	**57-2579-3A**	**57-2567**
28V	**57-2579-3A**	**57-2568A**	**57-2568A**	**57-2579-3A**	**57-2567**
32V	**57-2579-3A**	**57-2568-2A**	**57-2568-2A**	—	**57-2567**
48V	**57-2579-3A**	**57-2568A**	**57-2568A**	**57-2579-3A**	**57-2567**
120V	**57-2579-3A**	**57-2568A**	**57-2568A**	**57-2579-3A**	**57-2567**
Transformer Type					
120V	**42-2672A**	**42-2663A**	**42-2663A**	**42-2671A**	**42-2664A**
208V	**42-2672-2A**	**42-2663-2A**	**42-2663-2A**	**42-2671-2A**	**42-2664-2A**
240V	**42-2672-3A**	**42-2663-3A**	**42-2663-3A**	**42-2671-3A**	**42-2664-3A**
380V	**42-2672-4A**	**42-2663-4A**	**42-2663-4A**	**42-2671-4A**	**42-2664-4A**
480V	**42-2672-5A**	**42-2663-5A**	**42-2663-5A**	**42-2671-5A**	**42-2664-5A**
600V	**42-2672-6A**	**42-2663-6A**	**42-2663-6A**	**42-2671-6A**	**42-2664-6A**
Description and Part Numbers—Related Parts					
Inner lens	**28-1008**	**28-1010**	**28-1010**	**28-1010**	**28-1010**
Retaining nut	**15-1885**	**15-1885**	**15-1885**	**15-1885**	**15-1885**
Gasket	**16-2092**	**16-2092**	**16-2092**	**16-2092**	**16-2092**
Locking ring	**52-1116**	**52-1116**	**52-1116**	**52-1116**	**52-1116**

Replacement Lamps for E30 Illuminated Operators

Mfg. Lamp Type	Voltage	Base Style	Application	Part Number
6PSB	6V	T2 slide	E30 transformer and full voltage	**28-1022**
12PSB	12V	T2 slide	E30 full voltage	**28-1025**
24PSB	24V	T2 slide	E30 full voltage	**28-1026**
28PSB	28V	T2 slide	E30 full voltage	**28-1027**
48PSB	48V	T2 slide	E30 full voltage	**28-1028**
60PSB	60V	T2 slide	E30 full voltage	**28-1598**
120PSB	120V	T2 slide	E30 full voltage	**28-1029**
#259	6.3V	T3-1/4 wedge	E30 single transformer	**28-949**

Replacement Lamps—Incandescent and LED

	Incandescent Lamps			LED Lamps Eaton's Part Number			
Lamp Voltage	Manufacturer's Part Number	Base Style	Eaton's Part Number	Red	Green	Yellow	Blue ①
6	6PSB	T2 slide	**28-1022**	**35-1523**	**35-1523-2**	**35-1523-3**	**35-1523-17**
12	12PSB	T2 slide	**28-1025**	**35-1523-11**	**35-1523-12**	**35-1523-13**	**35-1523-18**
24	24PSB	T2 slide	**28-1026**	**35-1523-4**	**35-1523-5**	**35-1523-6**	**35-1523-19**
28	28PSB	T2 slide	**28-1027**	**35-1523-4**	**35-1523-5**	**35-1523-6**	**35-1523-19**
48	48PSB	T2 slide	**28-1028**	**35-1523-14**	**35-1523-15**	**35-1523-16**	**35-1523-20**
120	120PSB	T2 slide	**28-1029**	**35-1523-7**	**35-1523-8**	**35-1523-9**	**35-1523-21**

Note

① E30 blue LED bulbs may not provide sufficient intensity for some applications.

Technical Data and Specifications

Operator Specifications

Description	Specification
Climate Conditions	
Operating	–20° to 150°F (–29° to 65°C)
Terminals	
Light units	Terminals are saddle clamp type for 2 stranded or solid wires up to 12 AWG (4.0 mm^2) Torque—7 lb-in (0.8 Nm)
Contact block	Terminals are saddle clamp type for 2 stranded or solid wires up to 12 AWG (4.0 mm^2) Torque—7 lb-in (0.8 Nm)
Materials	
Operator	Zinc base die casting with a copper-nickel-chrome plated finish Withstands the 200 hr. salt spray test in accordance with MIL Spec. QQ-M-151A and NEMA 4X testing.
Internal parts	Including shafts, washers and springs, are made of stainless steel
Buttons and lenses	Colorfast, wear resistant, molded acetal resin
Contact blocks	Made of molded, heat resistant, mineral filled phenolic Contact block plungers are molded of nylon filled phenolic Contacts are silver
Reliability nibs	These nibs combine a scrubbing action with high pressure density when the contacts are closed They push through particles and films found on contact surfaces in industrial environments Reliability nibs self-adjust to the application—dry circuit, normal or heavy-duty

Reliability Nibs

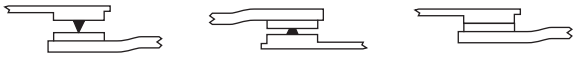

Dry Circuit Medium Duty Heavy-Duty

Electrical Ratings

Contact Blocks

Meet or Exceed NEMA Contact Rating Designation A600 and P300

	Vac A600				Vdc P300		
Description	**120V**	**240V**	**480V**	**600V**	**24/28V**	**125V**	**250V**
Make and emergency interrupting capacity (Amps)	60	30	15	12	5.73	1.1	0.55
Normal load break (Amps)	6	3	1.5	1.2	5.73	1.1	0.55
Continuous current (Amps)	10	10	10	10	5	5	5

- UL A600/P300 nominal connect 10A
- 1NO, 1NC, 2NO, 2NC, 1NO-1NC, early make, late break and overlapping configurations
- Mechanical positive drive operation on NC contacts
- Palladium alloy contact for logic level or highly corrosive environments

Maximum Ratings for Logic Level and Hostile Atmosphere Application

Description	Specification
Maximum amperes	0.5A ①
Maximum volts	120 Vac/Vdc

Light Unit

Description	Specification
Bulbs—Average Life	
Transformer type	20,000 hrs.
Resistor/direct voltage type	2,500 hrs. min. at rated voltage
LED	60,000 to 100,000 hrs.

Note

① Logic level contact blocks are UL A600/P500 rated per table above.

1

Dimensions

Approximate Dimensions in Inches (mm)

Pushbutton Operators

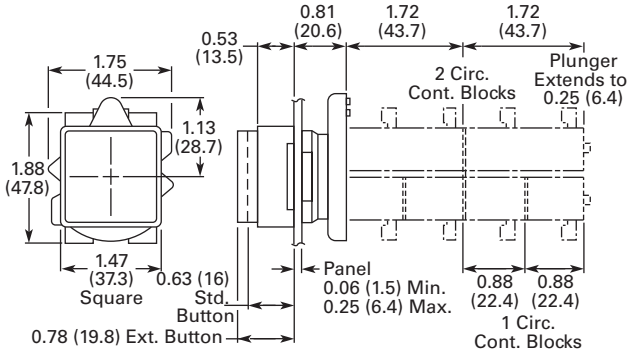

Combination Pushbutton and Indicating Light Operators

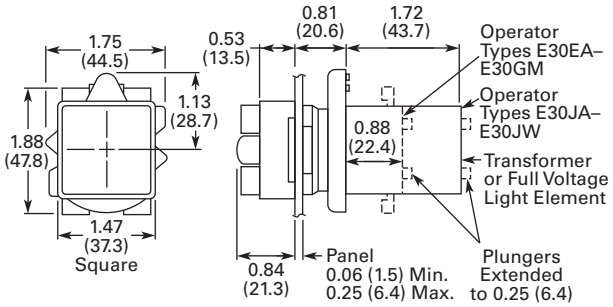

Combination Pushbutton and Indicating Light Operators

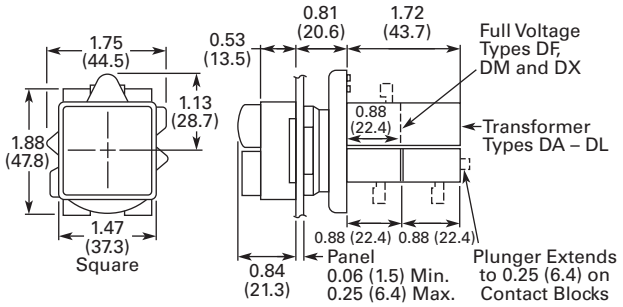

Indicating Light Operators

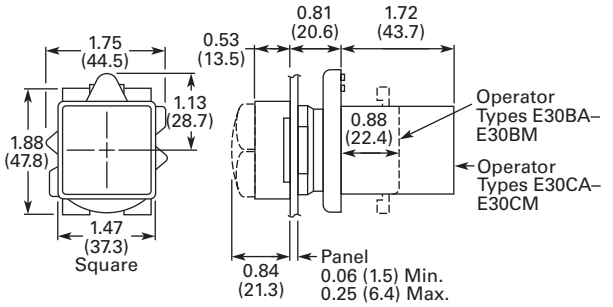

Padlocking Attachment and Half Shroud E30KT7

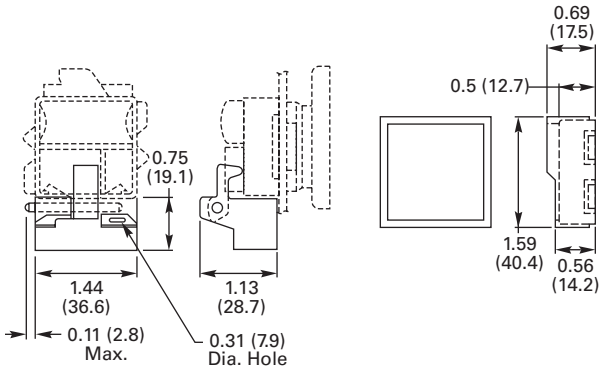

Drilling Dimensions—Minimum Spacing ①②

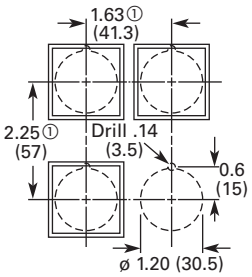

Notes

① Dimensions shown allow adequate space for the addition of one or two high legend plates and color coordinating collars.

② Locating nib hole or notch is 0.136 in (3.5 mm) drill. Alternate to drilling mounting holes use Greenlee Tool Co. punch (No. 730-S) to punch the hole and (No. 730-K) to punch the notch.

Legend Plates

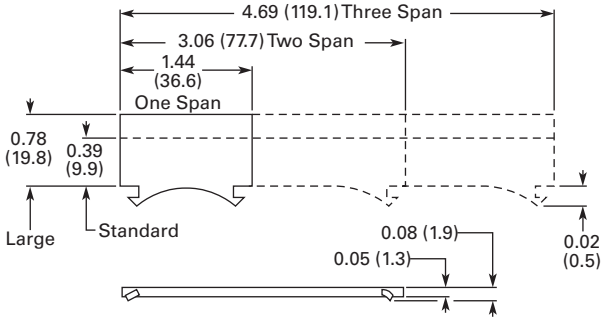

30.5 mm Heavy-Duty Watertight/Oiltight—10250T

Contents

Description	*Page*
30.5 mm Heavy-Duty Watertight/Oiltight—10250T	
Product Overview	**V7-T1-214**
Product Identification	**V7-T1-214**
Catalog Number Selection	**V7-T1-215**
Product Selection	
Point-of-Purchase Packaging	**V7-T1-217**
Non-Illuminated Momentary Pushbutton Units	**V7-T1-218**
Pushbuttons	**V7-T1-219**
Illuminated Momentary Pushbutton Units	**V7-T1-222**
Indicating Light Units	**V7-T1-223**
Illuminated Pushbuttons and Indicating Lights	**V7-T1-224**
Push-Pull Emergency Stop	**V7-T1-226**
Illuminated Push-Pull Units	**V7-T1-229**
Potentiometers	**V7-T1-232**
Push-Pull Operators	**V7-T1-233**
Selector Switch Units	**V7-T1-237**
Selector Switch Selection	**V7-T1-238**
Selector Switch Operators	**V7-T1-241**
Illuminated Selector Switch Operators	**V7-T1-244**
Joystick Units	**V7-T1-245**
Joysticks	**V7-T1-246**
Roto-Push Units	**V7-T1-249**
Roto-Push Operators	**V7-T1-250**
Accessories	**V7-T1-255**
Options	**V7-T1-260**
Replacement Parts	**V7-T1-269**
Technical Data and Specifications	**V7-T1-271**
Dimensions	**V7-T1-274**

Drawings Online

Product Description

The 30.5 mm pushbutton line features a zinc die cast construction with chrome-plated housing and mounting nut. The same durable construction is also available with the corrosive resistant E34 line of pushbuttons. See E34 section on **Pages V7-T1-284** to **V7-T1-325**.

Features

- Heavy-duty zinc die cast construction
- Enclosed silver contacts with reliability nibs
- Diaphragm seals with drainage holes
- Grounding nibs on the operator casing

Benefits

- Reliability nibs improve contact reliability even under dry circuit and fine dust conditions
- Drainage holes prevent buildup of liquid inside the operator which can prevent operation in freezing environments
- Grounding nibs bit through paint and other coatings to provide secure ground

Application Description

Contact Operation

Slow make and break. All normally closed contacts have positive opening operation, i.e., normally closed contacts are forced open in the event of contact weld or spring breakage.

Standards and Certifications

- CE EN 60947-5-1 and 60947-5-5
- UL 508—File No. 131568
- CSA C22.2 No. 14—File No. LR68551

Ingress Protection

When mounted in similarly rated enclosure—

- Standard indicating lights
  - UL (NEMA) Type 1, 2, 3, 3R, 3S, 4, 4X, 12, 13
  - IEC IP65
- Most other operators
  - UL (NEMA) Type 1, 2, 3, 3R, 4, 4X, 12, 13
  - IEC IP65

1

Product Overview

Reliability Nibs

Eaton's contact blocks feature enclosed silver contacts with pointed "reliability nibs" for reliable performance from logic level up to 600V. To ensure reliable switching, nibs bite through oxide which can form on silver contacts, eliminating the need for expensive logic level blocks for most applications.

Reliability Nibs

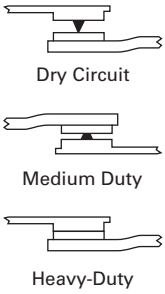

Reliability nibs improve performance in dry circuit, corrosive, fine dust and other contaminated atmospheres. Under normal environmental conditions, the minimum operational voltage is 5V and the minimum operational current is 1 mA, AC/DC. For operation under a wider range of environmental conditions, logic level contact blocks with inert palladium tipped contacts are recommended.

Grounding Nibs

10250T line operators have "grounding nibs"—four metal points on the operator casting designed to bite through most paints and other coatings on metal panels to enhance the ground connection when the operator is securely tightened.

Grounding Nibs

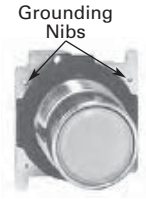

Diaphragm Seal with Drainage Holes

Liquid Drainage

Eaton's pushbutton operators offer front of panel drainage via holes in the operator bushing. Hidden from view by the mounting nut, these holes prevent buildup of liquid inside the operator, which can prevent operation in freezing environments. The holes also provide a route for escaping liquid in high pressure washdowns, effectively relieving pressure from the internal diaphragm seal, ensuring reliable sealing in applications even beyond NEMA 4.

Diaphragm Seal

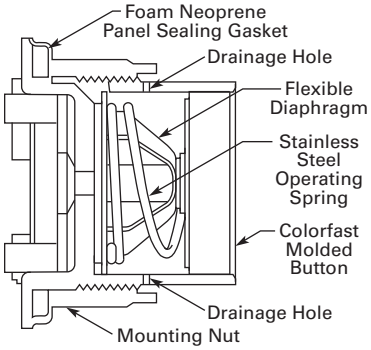

Product Identification

30.5 mm Heavy-Duty Watertight/Oiltight—10250T Series

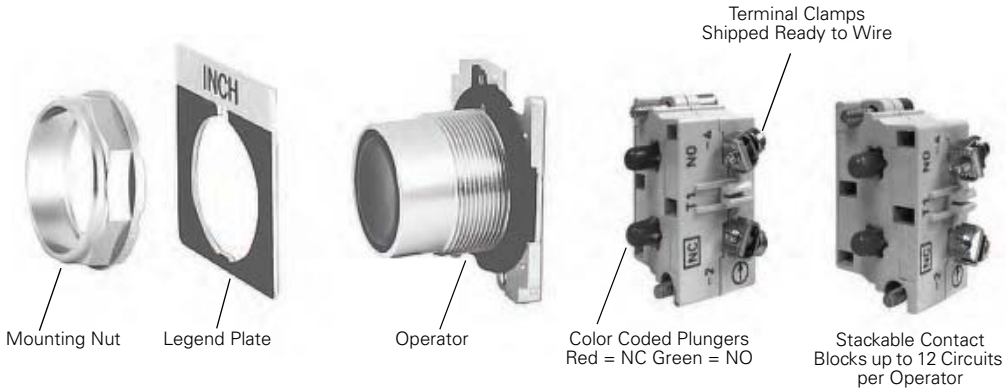

Catalog Number Selection

Catalog Number Selection is for illustrative purposes only and not to be used to create new catalog numbers.

Non-Illuminated Pushbuttons

10250T 10 1 – 1 ①

Operator
10 = Flush
11 = Extended
12 = 40 mm mushroom
17 = 65 mm mushroom
50 = 1/2 shroud vertical mount
51 = 1/2 shroud horizontal mount

Button Color	
1 = Black	**5** = Gray
2 = Red	**6** = White
3 = Green	**8** = Blue
4 = Yellow	**9** = Orange

Circuit
Blank = Operator only
1 = 1NO-1NC
2 = 2NO
3 = 2NC
51 = 1NC
53 = 1NO

Illuminated and Non-Illuminated Push-Pulls

10250T 5 63 C47 ___ – 1 ①

Operator
5 = Two-position maintained
4 = Three-position mom push-mom pull
9 = Three-position mt push-mom pull
10 = Three-position mom push-mom pull

Incandescent Light Unit	LED Light Unit
Blank = Non-illuminated	**Blank** = Non-illuminated
89 = 24V/XFR	**89L** = 24V/XFR
63 = 120V/XFR	**63L** = 120V/XFR
64 = 208V/XFR	**64L** = 208V/XFR
65 = 240V/XFR	**65L** = 240V/XFR
82 = 277V/XFR	**82L** = 277V/XFR
66 = 380V/XFR	**66L** = 380V/XFR
67 = 480V/XFR	**67L** = 480V/XFR
68 = 600V/XFR	**68L** = 600V/XFR
69 = 6V/FV	**97L** = Full voltage
70 = 12V/FV	
79 = 24V/FV	
83 = 32V/FV	
80 = 120V/RES	
81 = 240V/RES	

LED Voltage
Blank = Non-illuminated
Blank = Incandescent
06 = 6 Vac/Vdc
12 = 12 Vac/Vdc
24 = 24 Vac/Vdc
48 = 48 Vac/Vdc
60 = 60 Vac/Vdc
2A = 120 Vac
2D = 120 Vdc

Circuit
Blank = Operator only
1 = 1NO-1NC
2 = 2NO
3 = 2NC
51 = 1NC
53 = 1NO

Non-Illuminated	Illuminated		
Button	Incandescent	LED	Lens Type
B60 = Black 40 mm	**C47** =	**RD** =	Red 40 mm
B62 = Red 40 mm	**C53** =	**ED** =	Red 40 mm—"E" STOP
B63 = Red 40 mm—"E" STOP	**C48** =	**GD** =	Green 40 mm
B61 = Green 40 mm	**C49** =	**LD** =	Blue 40 mm
B64 = Blue 40 mm	**C50** =	**AD** =	Amber 40 mm
J60 = Black 65 mm	**C51** =	**WD** =	White 40 mm
J62 = Red 65 mm	**C52** =	**—** =	Clear 40 mm
J63 = Red 65 mm—"E" STOP	**C57** =	**RS** =	Red side light
J61 = Green 65 mm	**C63** =	**ES** =	Red side light—"E" STOP
J64 = Yellow 65 mm	**C58** =	**GS** =	Green side light
	C59 =	**LS** =	Blue side light
	C64 =	**AS** =	Amber side light
	C60 =	**YS** =	Yellow side light
	C61 =	**WS** =	White side light
	C62 =	**—** =	Clear side light
	C65 =	**RH** =	Red heavy-duty
	C66 =	**GH** =	Green heavy-duty
	C67 =	**AH** =	Amber heavy-duty

Note

① Add **X** at end of catalog number to receive parts assembled from factory.

1

Catalog Number Selection is for illustrative purposes only and not to be used to create new catalog numbers.

Illuminated Pushbuttons

10250T 416 C21 ___ – 1 ①

Incandescent Light Unit	LED Light Unit
416 = 24V/XFR	**397L** = Full voltage
411 = 120V/XFR	**416L** = 24V/XFR
412 = 240V/XFR	**411L** = 120V/XFR
419 = 277V/XFR	**412L** = 240V/XFR
413 = 380V/XFR	**419L** = 277V/XFR
414 = 480V/XFR	**413L** = 380V/XFR
415 = 600V/XFR	**414L** = 480V/XFR
473 = 6V/FV	**415L** = 600V/XFR
474 = 12V/FV	
476 = 24V/FV	
477 = 32V/FV	
478 = 48V/FV	
471 = 120V/RES	
472 = 240V/RES	

Incandescent Lens Color	LED Lens Color
C21 = Red	**RD** = Red
C22 = Green	**GD** = Green
C23 = Yellow	**YD** = Yellow
C26 = White	**WD** = White
C24 = Blue	**LD** = Blue
C43 = Amber	**AD** = Amber
C25 = Clear	

LED Voltage
Blank = Incandescent
06 = 6 Vac/Vdc
12 = 12 Vac/Vdc
24 = 24 Vac/Vdc
48 = 48 Vac/Vdc
60 = 60 Vac/Vdc
2A = 120 Vac
2D = 120 Vdc

Circuit
Blank = Operator only
1 = 1NO-1NC
2 = 2NO
3 = 2NC
51 = 1NC
53 = 1NO

Standard Indicating Lights, PresTest and Master Test

10250T 203N C1N ___ ①

Light Unit Type	
Standard—Incandescent	**Standard—LED**
181N = 120V/XFR	**181L** = 120V/XFR
182N = 240V/XFR	**182L** = 240V/XFR
198N = 277V/XFR	**198L** = 277V/XFR
183N = 380V/XFR	**183L** = 380V/XFR
184N = 480V/XFR	**184L** = 480V/XFR
185N = 600V/XFR	**185L** = 600V/XFR
203N = 6V/FV	**197L** = Full voltage
204N = 12V/FV	**PresTest—LED**
206N = 24V/FV	**221L** = 120V/XFR
207N = 32V/FV	**222L** = 240V/XFR
208N = 48V/FV	**223L** = 380V/XFR
201N = 120V/RES	**224L** = 480V/XFR
202N = 240V/RES	**225L** = 600V/XFR
226N = 120V/neon	**297L** = Full voltage
227N = 240V/neon	
PresTest—Incandescent	
221N = 120V/XFR	
222N = 240V/XFR	
223N = 380V/XFR	
224N = 480V/XFR	
225N = 600V/XFR	
232N = 6V/FV	
233N = 12V/FV	
235N = 24V/FV	
238N = 32V/FV	
239N = 48V/FV	
231N = 120V/RES	
240N = 240V/RES	
Master Test—Incandescent	
187N = 120V/XFR	
189N = 240 Vac—SS	

Plastic	Glass	Lens Color	Plastic	Glass	Lens Color
Standard/Master—Incandescent			**Standard/Master/PresTest—LED**		
C1N =	**C7N** =	Red	**RP** =	**RG** =	Red
C2N =	**C8N** =	Green	**GP** =	**GG** =	Green
C3N =	— =	Yellow	**YP** =	— =	Yellow
C6N =	**C12N** =	White	**WP** =	**WG** =	White
C4N =	**C10N** =	Blue	**LP** =	**LG** =	Blue
C19N =	**C9N** =	Amber	**AP** =	**AG** =	Amber
C5N =	**C11N** =	Clear			
PresTest—Incandescent					
C21 =	**C13N** =	Red			
C22 =	**C14N** =	Green			
C23 =	— =	Yellow			
C26 =	**C18N** =	White			
C24 =	**C16N** =	Blue			
C43 =	**C15N** =	Amber			
C25 =	**C17N** =	Clear			

LED Voltage
Blank = Incandescent
06 = 6 Vac/Vdc
12 = 12 Vac/Vdc
24 = 24 Vac/Vdc
48 = 48 Vac/Vdc
60 = 60 Vac/Vdc
2A = 120 Vac
2D = 120 Vdc

LED Voltage
Blank = Incandescent
06 = 6 Vac/Vdc
12 = 12 Vac/Vdc
24 = 24 Vac/Vdc
48 = 48 Vac/Vdc
60 = 60 Vac/Vdc
2A = 120 Vac

Note

① Add **X** at end of catalog number to receive parts assembled from factory.

Product Selection

Point-of-Purchase Packaging

Point-of-Purchase Packaged Pilot Device

10250T Point-of-Purchase Packaged Pilot Devices

Product	Description	Catalog Number
Emergency Stop Operators		
Red non-illuminated push-pull	1NO-1NC contact block. Also includes two square engraved legend plates: EMERG. STOP and STOP.	**10250T5B62-1-POP**
Red mushroom pushbutton	1NO-1NC contact block. Also includes two square engraved legend plates: EMERG. STOP and STOP.	**10250T32R-POP**
Red jumbo mushroom pushbutton	Engraved EMERG. STOP with 1NO-1NC contact block.	**10250T33-POP**
Momentary Pushbuttons		
Black flush pushbutton	1NO-1NC contact block. Also includes two square engraved legend plates: START and JOG.	**10250T30B-POP**
Green flush pushbutton		**10250T30G-POP**
Red extended pushbutton	1NO-1NC contact block. Also includes one square engraved legend plate: STOP.	**10250T31R-POP**
Indicating Lights		
Red indicating light	Full voltage 24 Vac/Vdc with two extra lenses: Green and amber. Also includes two square engraved legend plates: RUN and JOG.	**10250T206NC1N-POP**
Red indicating light	Resistor 120 Vac/Vdc with two extra lenses: Green and Amber. Also includes one square engraved legend plate: RUN and JOG.	**10250T34R-POP**
Illuminated Pushbuttons		
Red illuminating pushbutton	Full voltage 24 Vac/Vdc with 1NO-1NC contact block and two extra lenses: Green and amber. Also includes one square engraved legend plate: POWER ON.	**10250T476C21-1-POP**
Red illuminating pushbutton	Resistor 120 Vac/Vdc with 1NO-1NC contact block and two extra lenses: Green and amber. Also includes one square engraved legend plate: POWER ON.	**10250T411C21-1-POP**
Selector Switches		
Black knob two-position selector switch	1NO-1NC contact block. Also includes three square engraved legend plates: OFF/ON, HAND/AUTO and RUN/JOG.	**10250T20KB-POP**
Black knob three-position selector switch	2NO-2NC contact blocks. Also includes 1 square engraved legend plate: HAND/OFF/AUTO.	**10250T22KB-POP**
Black knob three-position selector switch	1NO-1NC contact block. Also includes legend plate: HAND/OFF/AUTO	**10250T21KB-POP**

1

Non-Illuminated Momentary Pushbutton Units

UL (NEMA) Type 3, 3R, 4, 4X, 12, 13

Flush Button

Extended Button

Mushroom Button

Jumbo Mushroom

Pushbutton Units—Flush, Extended, Mushroom Head or Jumbo Mushroom Head Operators

Contact Type	Button Color	Flush Button Catalog Number	Extended Button Catalog Number	Mushroom Button Catalog Number	Jumbo Mushroom ① Catalog Number
1NO	Black	**10250T23B**	**10250T25B**	**10250T26B**	**10250T27B**
	Red	**10250T23R**	**10250T112-53**	**10250T122-53**	**10250T172-53**
	Green	**10250T23G**	**10250T25G**	**10250T26G**	**10250T27G**
	Yellow	**10250T23Y**	**10250T25Y**	**10250T26Y**	**10250T27Y**
	Red—Engraved EMERG. STOP	—	—	—	**10250T17213-53**
1NC	Black	**10250T101-51**	**10250T111-51**	**10250T121-51**	**10250T171-51**
	Red	**10250T102-51**	**10250T25R**	**10250T26R**	**10250T27R**
	Green	**10250T103-51**	**10250T113-51**	**10250T123-51**	**10250T173-51**
	Yellow	**10250T104-51**	**10250T120-51**	**10250T124-51**	**10250T174-51**
	Red—Engraved EMERG. STOP	—	—	—	**10250T29**
1NO-1NC	Black	**10250T30B**	**10250T31B**	**10250T32B**	**10250T33B**
	Red	**10250T30R**	**10250T31R**	**10250T32R**	**10250T33R**
	Green	**10250T30G**	**10250T31G**	**10250T32G**	**10250T33G**
	Yellow	**10250T30Y**	**10250T31Y**	**10250T32Y**	**10250T33Y**
	Red—Engraved EMERG. STOP	—	—	—	**10250T33**
2NO	Black	**10250T101-2**	**10250T111-2**	**10250T121-2**	**10250T171-2**
	Red	**10250T102-2**	**10250T112-2**	**10250T122-2**	**10250T172-2**
	Green	**10250T103-2**	**10250T113-2**	**10250T123-2**	**10250T173-2**
	Yellow	**10250T104-2**	**10250T120-2**	**10250T124-2**	**10250T174-2**
	Red—Engraved EMERG. STOP	—	—	—	**10250T17213-2**
2NC	Black	**10250T101-3**	**10250T111-3**	**10250T121-3**	**10250T171-3**
	Red	**10250T102-3**	**10250T112-3**	**10250T122-3**	**10250T172-3**
	Green	**10250T103-3**	**10250T113-3**	**10250T123-3**	**10250T173-3**
	Yellow	**10250T104-3**	**10250T120-3**	**10250T124-3**	**10250T174-3**
	Red—Engraved EMERG. STOP	—	—	—	**10250T17213-3**

Note

① Anodized aluminum head is not suitable for use in ultraviolet light applications.

Pushbuttons

UL (NEMA) Type 3, 3R, 4, 4X, 12, 13

Momentary Pushbutton Operators, Non-illuminated

	Button	Color	Catalog Number	
10250T10_	Flush button ①	Black	**10250T101**	
		Red	**10250T102**	
		Green	**10250T103**	
		Yellow	**10250T104**	
		Gray	**10250T105**	
		White	**10250T106**	
		Blue	**10250T108**	
		Orange	**10250T109**	
10250T11_	Extended button	Black	**10250T111**	
		Red	**10250T112**	
		Green	**10250T113**	
		Yellow	**10250T120**	
		White	**10250T116**	
		Blue	**10250T118**	
		Orange	**10250T119**	
10250T5_	Half shrouded button		**Vertical**	**Horizontal**
		Black	**10250T501**	**10250T511**
		Red	**10250T502**	**10250T512**
		Green	**10250T503**	**10250T513**
		Yellow	**10250T504**	**10250T514**
		Gray	**10250T505**	**10250T515**
		White	**10250T506**	**10250T516**
		Blue	**10250T508**	**10250T518**
		Orange	**10250T509**	**10250T519**
10250T12_	Mushroom button	Black	**10250T121**	
		Red	**10250T122**	
		Green	**10250T123**	
		Yellow	**10250T124**	
		Blue	**10250T129**	
10250T17_	Jumbo mushroom button ②	Black	**10250T171**	
		Red	**10250T172**	
		Red (EMERG. STOP)	**10250T17213**	
		Green	**10250T173**	
		Yellow	**10250T174**	
10250ED1164_	Low operating force—jumbo mushroom ②③	Black	**10250ED1164-2**	
		Red	**10250ED1164-3**	
		Green	**10250ED1164-4**	
		Yellow	**10250ED1164-5**	
		Clear	**10250ED1164**	

Notes

① To order operator with factory assembled extended retaining nut, **10250TA12**, for thick panel applications, add suffix letter **E** to listed catalog number. Example: 10250T101**E**.

② Anodized aluminum head is not suitable for use in ultraviolet light applications.

③ Operating force—Standard = 2.4 lb; low force = 1.6 lb.

Note: To order complete assembled unit using one composite catalog number, add contact block and legend plate suffix to the end of operator catalog number. Example: 10250T101-**1TS33**

Operator 10250T101

+

Contact Block 10250T1

+

Legend Plate 10250TS33

1

UL (NEMA) Type 3, 3R, 4, 4X, 12, 13

10250TA_

Mechanically Interlocked Pushbutton Operators

Description	Catalog Number
Black flush and green flush	**10250TA66**
Black flush and long red	**10250TA67**
Black flush and red mushroom head	**10250TA68**
Black flush and lock-down red mushroom head	**10250TA69** ①
Black flush and red jumbo mushroom head	**10250TA76**
Green flush and long red	**10250TA72**
Black long and long red	**10250TA73**
Green flush and red mushroom head	**10250TA77**
Green flush and black flush	**10250TA75**

Lockout Pushbutton Operators with Padlock Attachments

UL (NEMA) Type 3, 3R, 4, 4X, 12, 13

The following pushbutton and mushroom operators include an integral padlock attachment for applications requiring lockout/tagout of specific machine functions. They are available in styles which allow locking of a button in the down position (stopped position) or locking a button in the up position (to prevent starting). Select the **"Hand"** latch type which functions as a momentary pushbutton until the operator presses the button and moves the padlock attachment into position for locking, or choose the **"Spring Loaded"** latch type where the padlock attachment springs into place when the button is pressed. Units accept a customer supplied 1/4 in padlock.

10250TA16

Padlockable in the Down Position ②

Operator Type	Color	Latch Type	Catalog Number
Flush head	Red	Hand	**10250TA16**
Mushroom head	Red	Hand	**10250TA42**
	Red	Spring loaded	**10250TA45**
Jumbo head ③	Red	Hand	**10250TA52**
	Red	Spring loaded	**10250TA55**
	Red (EMERG. STOP)	Spring loaded	**10250ED952**

Padlockable in the Up Position ②

10250TA4_

10250TA5_

Operator Type	Color	Latch Type	Catalog Number
Mushroom head	Black	Hand	**10250TA41**
	Green	Hand	**10250TA43**
Jumbo mushroom head ③	Black	Hand	**10250TA51**
	Green	Hand	**10250TA53**
	Yellow	Hand	**10250TA54**

Notes

Hand attachment must be manually moved into place for locking. Spring loaded: when operator is pressed—attachment springs into place. Must be moved manually to release button.

① NC contacts must be mounted behind lock-down mushroom head operator to ensure lockout.

② Operators can be latched down without a padlock. Padlock not included.

③ Jumbo mushroom heads are not recommended for use in applications where exposure to ultraviolet light exists.

Key Pushbutton Operator

UL (NEMA) Type 3, 3R, 4, 4X, 12, 13

These devices incorporate an integral locking mechanism which enables locking units in various positions (**Locked Down**), locking units to prevent operation (**Locked Up**) or setting unit to lock when the button is pressed (**Push to Lock**), requiring the key to be inserted to return to normal operation. With the key in the center position, these operators function as a normal momentary pushbutton (**Free**).

Replacement Keys or Dissimilar Locks for Key Operators Below

Listed operators have identical locks and keys (Key Code H661) Catalog Number 10250ED824. For dissimilar lock and key combinations, see listing on **Page V7-T1-242.**

Replacement Keys

Description	Catalog Number
Replacement keys (code H661)	**10250ED824**

10250T43_

Key Pushbutton Operator

Key Position and Pushbutton Operations

↖	↑	↗	Key Removal Positions	Vertical Mounting ① Catalog Number
Three-Position				
Lock up	Free	Lock down	All	**10250T430**
Lock up	Free	Lock down	L and R	**10250T431**
Lock up	Free	Lock down	C and R	**10250T432**
Two-Position				
Lock up	Free	—	L and C	**10250T433**
Lock up	Free	—	L	**10250T434**
—	Free	Lock down	C and R	**10250T435**
—	Free	Lock down	R	**10250T436**
—	Free	Push to lock	C and R	**10250T437**
—	Free	Push to lock	R	**10250T438**

Latch-In, Twist-to-Release Operator

UL (NEMA) Type 3, 3R, 4, 4X, 12, 13

10250ED1043-4

Operator Only with Button

Description	Catalog Number
Latch-in, twist-to-release operator with red mushroom head button	**10250ED1043-4**

Note

① Horizontal mounting available on request.

1

Illuminated Momentary Pushbutton Units

UL (NEMA) Type 3, 3R, 4, 4X, 12, 13

- LED or incandescent
- Full voltage, resistor or transformer type
- Plastic lenses

24V Full Voltage Illuminated Pushbutton

Illuminated Pushbutton Units

Type	Voltage	Color	LED/Lamp Number	Illuminated Pushbutton 1NO Catalog Number	1NO-1NC Catalog Number	1NC Catalog Number
LED Lamp						
Full voltage	24 Vac/Vdc	Red	Bayonet base	**10250T397LRD24-53**	**10250T397LRD24-1**	**10250T397LRD24-51**
		Green		**10250T397LGD24-53**	**10250T397LGD24-1**	**10250T397LGD24-51**
		Amber		**10250T397LAD24-53**	**10250T397LAD24-1**	**10250T397LAD24-51**
		Yellow		**10250T397LYD24-53**	**10250T397LYD24-1**	**10250T397LYD24-51**
		Blue		**10250T397LLD24-53**	**10250T397LLD24-1**	**10250T397LLD24-51**
		White		**10250T397LWD24-53**	**10250T397LWD24-1**	**10250T397LWD24-51**
	120 Vac/Vdc	Red		**10250T397LRD2A-53**	**10250T397LRD2A-1**	**10250T397LRD2A-51**
		Green		**10250T397LGD2A-53**	**10250T397LGD2A-1**	**10250T397LGD2A-51**
		Amber		**10250T397LAD2A-53**	**10250T397LAD2A-1**	**10250T397LAD2A-51**
		Yellow		**10250T397LYD2A-53**	**10250T397LYD2A-2**	**10250T397LYD2A-51**
		Blue		**10250T397LLD2A-53**	**10250T397LLD2A-1**	**10250T397LLD2A-51**
		White		**10250T397LWD2A-53**	**10250T397LWD2A-1**	**10250T397LWD2A-51**
Transformer	120 Vac	Red		**10250T411LRD06-53**	**10250T411LRD06-1**	**10250T411LRD06-51**
		Green		**10250T411LGD06-53**	**10250T411LGD06-1**	**10250T411LGD06-51**
		Amber		**10250T411LAD06-53**	**10250T411LAD06-1**	**10250T411LAD06-51**
		Yellow		**10250T411LYD06-53**	**10250T411LYD06-1**	**10250T411LYD06-51**
		Blue		**10250T411LLD06-53**	**10250T411LLD06-1**	**10250T411LLD06-51**
		White		**10250T411LWD06-53**	**10250T411LWD06-1**	**10250T411LWD06-51**
Incandescent Lamp						
Full voltage	24 Vac/Vdc	Red	#757	**10250T476C21-53**	**10250T476C21-1**	**10250T476C21-51**
		Green		**10250T476C22-53**	**10250T476C22-1**	**10250T476C22-51**
		Amber		**10250T476C43-53**	**10250T476C43-1**	**10250T476C43-51**
		Yellow		**10250T476C23-53**	**10250T476C23-1**	**10250T476C23-51**
		Blue		**10250T476C24-53**	**10250T476C24-1**	**10250T476C24-51**
		Clear		**10250T476C25-53**	**10250T476C25-1**	**10250T476C25-51**
		White		**10250T476C26-53**	**10250T476C26-1**	**10250T476C26-51**
Resistor	120 Vac/Vdc	Red	120MB	**10250T471C21-53**	**10250T471C21-1**	**10250T471C21-51**
		Green		**10250T471C22-53**	**10250T471C22-1**	**10250T471C22-51**
		Amber		**10250T471C43-53**	**10250T471C43-1**	**10250T471C43-51**
		Yellow		**10250T471C23-53**	**10250T471C23-1**	**10250T471C23-51**
		Blue		**10250T471C24-53**	**10250T471C24-1**	**10250T471C24-51**
		Clear		**10250T471C25-53**	**10250T471C25-1**	**10250T471C25-51**
		White		**10250T471C26-53**	**10250T471C26-1**	**10250T471C26-51**
Transformer	120 Vac	Red	#755	**10250T75R** ①	**10250T76R** ①	**10250T77R** ①
		Green		**10250T75G** ①	**10250T76G** ①	**10250T77G** ①
		Amber		**10250T75A** ①	**10250T76A** ①	**10250T77A** ①
		Yellow		**10250T75Y** ①	**10250T76Y** ①	**10250T77Y** ①
		Blue		**10250T75B** ①	**10250T76B** ①	**10250T77B** ①
		Clear		**10250T75C** ①	**10250T76C** ①	**10250T77C** ①
		White		**10250T75W** ①	**10250T76W** ①	**10250T77W** ①

Note

① For flashing module catalog number 10250TFL1, add suffix code **FM** to listed catalog number. Example: 10250T75R**FM**.

Indicating Light Units ①

UL (NEMA) Type 3, 3R, 4, 4X, 12, 13

- LED or incandescent
- Full voltage, resistor or transformer type
- Standard and PresTest types
- Plastic lenses

PresTest—This device incorporates a press-to-test feature whereby depressing the lens disconnects the light from the source being monitored and connects the lamp to a continuously energized circuit for immediate detection of faulty lamps.

24V Full Voltage Illuminated Light

120 Vac Transformer PresTest

Indicating Light Units

Type	Voltage	Color	LED/Lamp Number	Indicating Light Catalog Number	PresTest Catalog Number
LED Lamp					
Full voltage	24 Vac/Vdc	Red	Bayonet base	**10250T197LRP24**	**10250T297LRP24**
		Green		**10250T197LGP24**	**10250T297LGP24**
		Amber		**10250T197LAP24**	**10250T297LAP24**
		Yellow		**10250T197LYP24**	**10250T297LYP24**
		Blue		**10250T197LLP24**	**10250T297LLP24**
		White		**10250T197LWP24**	**10250T297LWP24**
	120 Vac	Red		**10250T197LRP2A**	**10250T297LRP2A**
		Green		**10250T197LGP2A**	**10250T297LGP2A**
		Amber		**10250T197LAP2A**	**10250T297LAP2A**
		Yellow		**10250T197LYP2A**	**10250T297LYP2A**
		Blue		**10250T197LLP2A**	**10250T297LLP2A**
		White		**10250T197LWP2A**	**10250T297LWP2A**
Transformer	120 Vac	Red		**10250T181LRP06**	**10250T221LRP06**
		Green		**10250T181LGP06**	**10250T221LGP06**
		Amber		**10250T181LAP06**	**10250T221LAP06**
		Yellow		**10250T181LYP06**	**10250T221LYP06**
		Blue		**10250T181LLP06**	**10250T221LLP06**
		White		**10250T181LWP06**	**10250T221LWP06**
Incandescent Lamp					
Full voltage	24 Vac/Vdc	Red	#757	**10250T206NC1N**	**10250T235NC21**
		Green		**10250T206NC2N**	**10250T235NC22**
		Amber		**10250T206NC19N**	**10250T235NC43**
		Yellow		**10250T206NC3N**	**10250T235NC23**
		Blue		**10250T206NC4N**	**10250T235NC24**
		Clear		**10250T206NC5N**	**10250T235NC25**
		White		**10250T206NC6N**	**10250T235NC26**
Resistor	120 Vac/Vdc	Red	120MB	**10250T201NC1N**	**10250T231NC21**
		Green		**10250T201NC2N**	**10250T231NC22**
		Amber		**10250T201NC19N**	**10250T231NC43**
		Yellow		**10250T201NC3N**	**10250T231NC23**
		Blue		**10250T201NC4N**	**10250T231NC24**
		Clear		**10250T201NC5N**	**10250T231NC25**
		White		**10250T201NC6N**	**10250T231NC26**
Transformer ②	120 Vac	Red	#755	**10250T34R**	**10250T74NR**
		Green		**10250T34G**	**10250T74NG**
		Amber		**10250T34A**	**10250T74NA**
		Yellow		**10250T34Y**	**10250T74NY**
		Blue		**10250T34B**	**10250T74NB**
		Clear		**10250T34C**	**10250T74NC**
		White		**10250T34W**	**10250T74NW**

Notes

① Standard indicating lights are rated UL (NEMA) 3S as well.

② For flashing lamp add letter **F** to listed catalog number. Example: 10250T34R**F**.

1

Illuminated Pushbuttons and Indicating Lights

- LED or incandescent
- Full voltage, resistor or transformer type

Illuminated Pushbutton

Indicating Light

PresTest

Master Test

Operators without Lens

Type	Voltage	LED/Lamp Number	Illuminated Pushbutton Catalog Number	Indicating Light Catalog Number	PresTest Catalog Number	Master Test Catalog Number
Incandescent Unit						
Full voltage AC/DC	6	#755	**10250T473**	**10250T203N**	**10250T232N**	—
	12	#756	**10250T474**	**10250T204N**	**10250T233N**	—
	24	#757	**10250T476**	**10250T206N**	**10250T235N**	—
	32	#1828	**10250T477**	**10250T207N**	**10250T238N**	—
	48	#1835	**10250T478**	**10250T208N**	**10250T239N**	—
Resistor AC/DC ②	120	120MB	**10250T471**	**10250T201N**	**10250T231N**	—
	240	120MB	**10250T472**	**10250T202N**	**10250T240N**	—
Transformer AC only ③	24	#755	**10250T416**	—	—	—
	120		**10250T411**	**10250T181N**	**10250T221N**	—
	240		**10250T422**	**10250T182N**	**10250T222N**	—
	277		**10250T419**	**10250T198N**	—	—
	380		**10250T413**	**10250T183N**	**10250T223N**	—
	480		**10250T414**	**10250T184N**	**10250T224N**	—
	600		**10250T415**	**10250T185N**	**10250T225N**	—
Neon AC/DC ④	120	NE51H-R22	—	**10250T226N**	—	—
	240	NE51H-R68	—	**10250T227N**	—	—
Solid-state 50/60 Hz only	120	120MB	—	—	—	**10250T189N**
LED (LEDs not included) ①						
Full voltage	—	Bayonet base	**10250T397L**	**10250T197L**	**10250T297L**	—
Transformer AC only	24		**10250T416L**	—	—	—
	120		**10250T411L**	**10250T181L**	**10250T221L**	—
	240		**10250T412L**	**10250T182L**	**10250T222L**	—
	277		**10250T419L**	**10250T198L**	—	—
	380		**10250T413L**	**10250T183L**	**10250T223L**	—
	480		**10250T414L**	**10250T184L**	**10250T224L**	—
	600		**10250T415L**	**10250T185L**	**10250T225L**	—

Notes

① These units do not include lamps. Order LED separately to match lens color. See **Page V7-T1-269** for LED Selection and **Page V7-T1-216** for Catalog Numbering System.

② Resistor units are not available for use with LEDs, choose either transformer or full voltage LED style.

③ For flashing lamp, add letter **F** to listed catalog number. Example: 10250T181N**F.**

④ Resistant to shock and vibration. For best illumination use amber, yellow or clear lens.

Plastic

Glass

Indicating and Master Test Lenses

Color	Plastic Catalog Number	Glass Catalog Number
Red	**10250TC1N**	**10250TC7N**
Green	**10250TC2N**	**10250TC8N**
Amber	**10250TC19N**	**10250TC9N**
Yellow	**10250TC3N**	—
Blue	**10250TC4N**	**10250TC10N**
Clear	**10250TC5N**	**10250TC11N**
White	**10250TC6N**	**10250TC12N**

10250TC2_

Illuminated Pushbutton Lenses

Color	Catalog Number
Red	**10250TC21**
Green	**10250TC22**
Yellow	**10250TC23**
Amber	**10250TC43**
Blue	**10250TC24**
Clear	**10250TC25**
White	**10250TC26**

Plastic

Glass

PresTest Lenses

Color	Plastic Catalog Number	Glass Catalog Number
Red	**10250TC21**	**10250TC13N**
Green	**10250TC22**	**10250TC14N**
Amber	**10250TC43**	**10250TC15N**
Yellow	**10250TC23**	—
Blue	**10250TC24**	**10250TC16N**
Clear	**10250TC25**	**10250TC17N**
White	**10250TC26**	**10250TC18N**

1

Push-Pull Emergency Stops (Compliant with IEC 60947-5-5)

UL (NEMA) Type 3, 3R, 4, 4X, 12, 13

- Two- and three-position
- Non-illuminated
- LONC contact block

10250T579C47-71X

Two-Position Push-Pull Units

Operator Position ①						
Pull	**Push**	**Button Type/Color**	**Lamp**	**Type**	**Voltage**	**Catalog Number**
X	O	40 mm red—illuminated	Incandescent	Transformer	120 Vac/Vdc	**10250T563C47-71X**
X	O	40 mm red—illuminated EMERG. STOP	Incandescent	Transformer	120 Vac/Vdc	**10250T563C53-71X**
X	O	40 mm red—illuminated EMERG. STOP	LED	Transformer	120 Vac/Vdc	**10250T563LED06-71X**
X	O	40 mm red—illuminated	Incandescent	Full voltage	24 Vdc	**10250T579C47-71X**
X	O	40 mm red—illuminated EMERG. STOP	Incandescent	Full voltage	24 Vdc	**10250T579C53-71X**
X	O	40 mm red—illuminated	Incandescent	Resistor	120 Vac/Vdc	**10250T580C47-71X**
X	O	40 mm red—illuminated EMERG. STOP	Incandescent	Resistor	120 Vac/Vdc	**10250T580C53-71X**
X	O	40 mm red—illuminated	Incandescent	Transformer	24 Vac	**10250T589C47-71X**
X	O	40 mm red—illuminated EMERG. STOP	Incandescent	Transformer	24 Vac	**10250T589C53-71X**
X	O	40 mm red—illuminated EMERG. STOP	LED	Transformer	24 Vac	**10250T589LED06-71X**
X	O	40 mm red—illuminated	LED	Transformer	24 Vac	**10250T589LRD06-71X**
X	O	40 mm red—illuminated EMERG. STOP	LED	Full voltage	24 Vdc	**10250T597LED24-71X**
X	O	40 mm red—illuminated EMERG. STOP	LED	Full voltage	120 Vac/Vdc	**10250T597LED2A-71X**
X	O	40 mm red—illuminated	LED	Full voltage	24 Vdc	**10250T597LRD24-71X**
X	O	40 mm red—illuminated	LED	Full voltage	120 Vac/Vdc	**10250T597LRD2A-71X**
X	O	40 mm red	—	—	—	**10250T5B62-71X**
X	O	40 mm red—EMERG. STOP	—	—	—	**10250T5B63-71X**
X	O	65 mm red	—	—	—	**10250T5J62-71X**
X	O	65 mm red—EMERG. STOP	—	—	—	**10250T5J63-71X**

Note

① X = closed circuit, O = open circuit.

UL (NEMA) Type 3, 3R, 4, 4X, 12, 13

Two-Position Push-Pull Units

	Operator Position ① Pull	Push	Button Type/Color ②	Contact Type	Mounting Location A	Mounting Location B	Catalog Number ②
	Two-Position Maintained Push, Maintained Pull						
10250T5B62-1X	O X	X O	40 mm/red	1NO 1NC			**10250T5B62-1X**
10250T5B63-1X	O X	X O	40 mm engraved EMERG. STOP/red	1NO 1NC			**10250T5B63-1X**
10250T5J63-1X	O X	X O	65 mm aluminum engraved EMERG. STOP/red	1NO 1NC			**10250T5J63-1X**
10250ED1080-2	O X	X O	65 mm aluminum engraved EMERG. STOP/red Special security jumbo mushroom head	1NO 1NC			**10250ED1080-2**

Button and Color Selection

	Color	Suffix Code	Catalog Number
Standard	**Standard—40 mm**		
	Red	**B62**	**10250TB62**
	Red (EMERG. STOP)	**B63**	**10250TB63**
	Green	**B61**	**10250TB61**
	Black	**B60**	**10250TB60**
	Blue	**B64**	**10250TB64**
Jumbo Mushroom Head	**Jumbo Mushroom Head ③ (Anodized) Aluminum—65 mm**		
	Red	**J62**	**10250TJ62**
	Red (EMERG. STOP)	**J63**	**10250TJ63**
	Green	**J61**	**10250TJ61**
	Black	**J60**	**10250TJ60**
	Yellow	**J64**	**10250TJ64**

Notes

① X = closed circuit, O = open circuit.

② To order different type or color buttons, substitute the underlined characters with appropriate suffix code from the table. Example: 10250T5**B64**-1X.

③ Anodized aluminum head is not suitable for use in ultraviolet light applications.

1

UL (NEMA) Type 3, 3R, 4, 4X, 12, 13

10250T_

Three-Position Push-Pull Units

Operator Position ① Pull	Intermediate	Push	Button Type/Color ②	Contact Type	Mounting Location A	Mounting Location B	Catalog Number ②
Maintained Push, Momentary Pull							
X	O	O	40 mm/black	1NC			**10250T9B60-3X**
X	X	O	40 mm/red	1NC			**10250T9B62-3X**
			40 mm engraved EMERG. STOP/red				**10250T9B63-3X**
Momentary Push, Momentary Pull							
X	O	O	40 mm/black	1NC			**10250T4B60-3X**
X	X	O	40 mm/red	1NC			**10250T4B62-3X**
O	O	X	40 mm/black	1NO			**10250T10B60-1X**
X	O	O	40 mm/red	1NC			**10250T10B62-1X**

Button and Color Selection

Standard

Jumbo Mushroom Head

Color	Suffix Code	Catalog Number
Standard—40 mm		
Red	**B62**	**10250TB62**
Red (EMERG. STOP)	**B63**	**10250TB63**
Green	**B61**	**10250TB61**
Black	**B60**	**10250TB60**
Blue	**B64**	**10250TB64**
Jumbo Mushroom Head ③ (Anodized) Aluminum—65 mm		
Red	**J62**	**10250TJ62**
Red (EMERG. STOP)	**J63**	**10250TJ63**
Green	**J61**	**10250TJ61**
Black	**J60**	**10250TJ60**
Yellow	**J64**	**10250TJ64**

Notes

① X = closed circuit, O = open circuit.

② To order different type or color buttons, substitute the underlined characters with appropriate suffix code from the table. Example: 10250T5**B64**-1X.

③ Anodized aluminum head is not suitable for use in ultraviolet light applications.

Illuminated Push-Pull Units

UL (NEMA) Type 3, 3R, 4, 4X, 12, 13

- LED or incandescent
- Full voltage, resistor or transformer type
- Two-position maintained

Two-Position Push-Pull Operator

Two-Position Illuminated Maintained Push, Maintained Pull

Operator Position ①

Maintained—Pull	Maintained—Push	Lamp	Type	Voltage	Contact Type	Mounting Location A	Mounting Location B	LED/Lamp Number	Red Standard Push-Pull Catalog Number ②
0	X	LED	Full Voltage	24 Vac/Vdc	1NO			Bayonet base	**10250T597LRD24-1X**
X	0			120 Vac/Vdc	1NC				**10250T597LRD2A-1X**
			Transformer	24 Vac					**10250T589LRD06-1X**
				120 Vac					**10250T563LRD06-1X**
0	X	Incandescent	Full voltage	24 Vac/Vdc	1NO			#757	**10250T579C47-1X**
X	0		Resistor	120 Vac/Vdc	1NC			120MB	**10250T580C47-1X**
			Transformer	24 Vac				#755	**10250T589C47-1X**
				120 Vac					**10250T563C47-1X**

10250ED137_

Jumbo Lens Illuminated E-Stops

Lamp	Button Type/Color	Type	Voltage	Contact Type	Catalog Number
LED	Two-position illuminated maintained push/pull—50 mm jumbo lens/red	Full voltage	24 Vac/Vdc	1NO 1NC	**10250ED1375**
LED	Three-position illuminated momentary push/pull—50 mm jumbo lens/red	Full voltage	24 Vac/Vdc	1NC 1NC	**10250ED1376**
LED	Three-position illuminated momentary push/pull—50 mm jumbo lens/red	Full voltage	24 Vac/Vdc	1NO 1NC	**10250ED1377**
LED	Three-position illuminated maintained push/momentary pull—50 mm lens/red	Full voltage		1NO 1NC	**10250ED1378**

Notes

① X = closed circuit, 0 = open circuit.

② To order different type or color lens, substitute the underlined characters with appropriate suffix code from table on next page. Example: 10250T579**C63**-1X. For LEDs with different voltages see ordering example on **Page V7-T1-235**.

1

UL (NEMA) Type 3, 3R, 4, 4X, 12, 13

Lens and Color Selection

Standard

Side-Lighted Aluminum

Aluminum Transparent Center

Jumbo Lens

Color	Incandescent Suffix Code	LED Suffix Code	Catalog Number
Standard—40 mm			
Red	**C47**	**RD**	**10250TC47**
Red (EMERG. STOP)	**C53**	**ED**	**10250TC53**
Green	**C48**	**GD**	**10250TC48**
Blue	**C49**	**LD**	**10250TC49**
Amber	**C50**	**AD**	**10250TC50**
White	**C51**	**WD**	**10250TC51**
Clear	**C52**	**CD**	**10250TC52**
Side-Lighted Aluminum—40 mm ①			
Red	**C57**	**RS**	**10250TC57**
Red (EMERG. STOP)	**C63**	**ES**	**10250TC63**
Green	**C58**	**GS**	**10250TC58**
Blue	**C59**	**LS**	**10250TC59**
Amber	**C64**	**AS**	**10250TC64**
Yellow	**C60**	**YS**	**10250TC60**
White	**C61**	**WS**	**10250TC61**
Clear	**C62**	**CS**	**10250TC62**
Aluminum Transparent Center—40 mm ①			
Red	**C65**	**RH**	**10250TC65**
Green	**C66**	**GH**	**10250TC66**
Amber	**C67**	**AH**	**10250TC67**
Jumbo Lens—50 mm			
Red	—	—	**10250TC77**

Note

① Clear anodized aluminum and colored lens.

UL (NEMA) Type 3, 3R, 4, 4X, 12, 13

Three-Position Push-Pull Operator

Three-Position Illuminated Momentary Push, Momentary Pull

Operator Position ①

Momentary—Pull	Maintained—Intermediate	Momentary—Push	Lamp	Type	Voltage	Contact Type	Mounting Location A	Mounting Location B	LED/ Lamp Number	Red Standard Push-Pull Catalog Number ③
O	O	X	LED	Full voltage	24 Vac/Vdc	1NO			Bayonet base	**10250T1097LRD24-1X**
X	O	O			120 Vac	1NC				**10250T1097LRD2A-1X**
				Transformer	24 Vac					**10250T1089LRD06-1X**
					120 Vac					**10250T1063LRD06-1X**
X	O	O		Full voltage	24 Vac/Vdc	1NC			Bayonet base	**10250T497LRD24-3X**
X	X	O			120 Vac	1NC				**10250T497LRD2A-3X**
				Transformer	24 Vac					**10250T489LRD06-3X**
					120 Vac					**10250T463LRD06-3X**
O	O	X	Incan-descent	Full voltage	24 Vac/Vdc	1NO			#757	**10250T1079C47-1X**
X	O	O		Resistor	120 Vac	1NC			120MB	**10250T1080C47-1X**
				Transformer	24 Vac				#755	**10250T1089C47-1X**
					120 Vac					**10250T1063C47-1X**
X	O	O		Full voltage	24 Vac/Vdc	1NC			#757	**10250T479C47-3X**
X	X	O		Resistor	120 Vac	1NC			120MB	**10250T480C47-3X**
				Transformer	24 Vac				#755	**10250T489C47-3X**
					120 Vac					**10250T463C47-3X**

Three-Position Push-Pull Operator

Three-Position Illuminated Maintained Push, Momentary Pull

Operator Position ①

Momentary—Pull	Maintained—Intermediate	Momentary—Push	Lamp	Type	Voltage	Contact Type	Mounting Location A	Mounting Location B	LED/ Lamp Number	Red Standard Push-Pull Catalog Number ②
X	O	O	LED	Full voltage	24 Vac/Vdc	1NC			Bayonet base	**10250T997LRD24-3X**
X	X	O			120 Vac	1NC				**10250T997LRD2A-3X**
				Transformer	24 Vac					**10250T989LRD06-3X**
					120 Vac					**10250T963LRD06-3X**
X	O	O	Incan-descent	Full voltage	24 Vac/Vdc	1NC			#757	**10250T979C47-3X**
X	X	O		Resistor	120 Vac	1NC			120MB	**10250T980C47-3X**
				Transformer	24 Vac				#755	**10250T989C47-3X**
					120 Vac					**10250T963C47-3X**

Notes

① X = closed circuit, O = open circuit.

② To order different type or color lens, substitute the underlined characters with appropriate suffix code from table on **Page V7-T1-230.** Example: 10250T1079**C53**-1X. For LEDs with different voltages see ordering example on **Page V7-T1-235**.

③ To order different type or color lens, substitute the underlined characters with appropriate suffix code from table on **Page V7-T1-230**. Example: 10250T979**C53**X. For LEDs with different voltages see ordering example on **Page V7-T1-235**.

1

Potentiometers

UL (NEMA) Type 3, 3R, 4, 4X, 12, 13

Vertical or Horizontal ①
One-Hole Mounting

Potentiometer with Knob and Standard Dial Plate—Linear Type ±10%

Potentiometer Ohms	Catalog Number
2 Watt (60V Max.) Single Potentiometer with Standard Aluminum Dial Plate ②③	
1000	**10250T331**
2500	**10250T332**
5000	**10250T338**
10000	**10250T333**
25000	**10250T334**
50000	**10250T335**
Operator only ④	**10250T330**
Alternative—black plastic large legend with standard markings	**E34LP99**

Notes

① Shown with standard aluminum dial plate.

② Large dial plate with space for legend is available at no charge. To order, add suffix **36** to catalog number. Example: 10250T331**36**. To order separately, see footnote ③ below.

③ Large dial plate has space at top for 15 letters. 3/32 in high. For custom stamped legend plates, order legend plate as separate item **10250TR30** and specify stamping.

④ For use with commercially purchased potentiometers having shaft dimensions per dimension drawing on **Page V7-T1-279**.

Push-Pull Operators

An illuminated push-pull pushbutton unit, arranged for one-hole mounting, can replace two pushbuttons and a pilot light or the non-illuminated form can replace two pushbuttons. These units are available in three basic types:

- **Maintained**—(Two-position). Maintains in the pulled or pushed position until manually actuated to the opposite mode.
- **Momentary**—(Three-position). Spring returns to an intermediate position when pulled or pushed and released.
- **Momentary Pull, Maintained Push**—(Three-position). Spring returns to intermediate position when pulled. Maintains in pushed position until manually returned to intermediate (ready to reset) position. Maintained stop holds circuit open and will prevent other series connected operators from starting the system.

The operators, buttons, contact blocks, etc., are offered as building block components that can be intermixed to satisfy many requirements. This minimizes the need for a varied and costly inventory.

Two-Position Maintained Push-Pull ①

Typical Applications

Control	Line—Diagram	Operator	Circuits	Operator Mode		
Three-wire three-position momentary	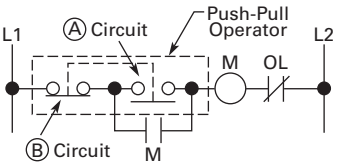	Momentary push and pull 10250T4	2NC contact block 10250T3	START (mom.) 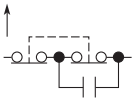	Normal pos. (maint.) 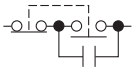	STOP (mom.) 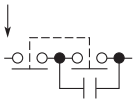
		Momentary push and pull 10250T10	1NO-1NC contact block 10250T1	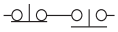	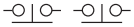	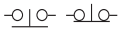
Two-wire two-position maintained	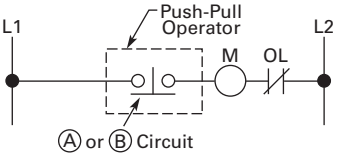	Maintained push and pull 10250T5	1NC contact block 10250T51	START (maint.) 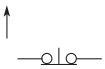	No intermediate position	STOP (maint.)
Three-wire momentary pull maintained push	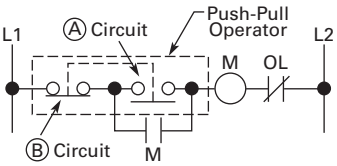	Maintained push and momentary pull 10250T9	2NC contact block 10250T3	START (mom.) 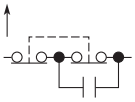	Normal pos. (maint.) 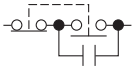	STOP (maint.) 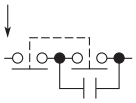

Notes

A and **B** circuits shown in the application illustrations are defined in the "Application Guide" on the following page.

① Shown without button on lens.

1

Application Guide

To assist in the selection of contact blocks, the sketch to the right shows pictorially by symbols **A** and **B** locations of contact circuits after assembly of contact blocks and adapter to the operator. The table below shows the effect of the push and pull operations on either NO or NC contacts. (X = contact closed, O = contact open).

Contact Circuit Locations

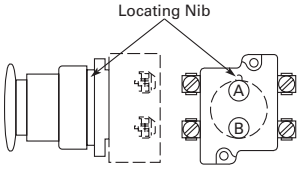

10250T579C47-71X

Push-Pull Operator Components

Type of Operator	Operator Position and Circuit Arrangement: Out—Pull			Intermediate			In—Push			Contact Block ①	Catalog Number
	Contact Block Mounting Location: A		B	A		B	A		B		
Two-Position Operator without Lens											
Maintained push-pull	O X	or	O X	No intermediate position			X O	or	X O	1NO 1NC	**10250T5**
	O X		O X				X O		X O	2NO 2NC	
Maintained push-pull with anti-theft jumbo mushroom	O X	or	O X	No intermediate position			X O	or	X O	1NO 1NC	**10250ED1080**
	O X		O X				X O		X O	2NO 2NC	
Three-Position Operator without Lens											
Momentary push-pull	O X	or	O X	O O	or	O X	X O	or	O O	1NO 1NC	**10250T4** ①
	O X		O X	O O		O X	X O		O O	2NO 2NC	
Maintained push-momentary pull	O X	or	O X	O O	or	O X	X O	or	O O	1NO 1NC	**10250T9** ①
	O X		O X	O O		O X	X O		O O	2NO 2NC	
Momentary push-pull	O X	or	O X	O O	or	O O	X O	or	X O	1NO 1NC	**10250T10** ①
	O X		O X	O O		O O	X O		X O	2NO 2ND	

Note

① Maximum of two blocks, four circuits. Special function contact blocks shown on **Page V7-T1-265** CANNOT be used with three-position push-pull operators 10250T4, 10250T9 or 10250T10.

Push-Pull Light Units, Lenses and Buttons

Ordering Example with One Composite Number

Non-illuminated:
10250T5 + 10250TB62 + 10250T1 = **10250T5B62-1X**

Incandescent:
10250T5 + 10250T79 + 10250TC47 + 10250T1 = **10250T579C47-1X**

LED:
10250T5 + 10250T97L + 10250TC47 + Voltage code + 10250T1 = **10250T597LRD24-1X**

06—6 Vac/Vdc
12—12 Vac/Vdc
24—24 Vac/Vdc
48—48 Vac/Vdc
60—60 Vac/Vdc
2A—120 Vac
2D—120 Vac

Light Units for Illuminated Push-Pull Devices

Light Unit Type	Type	Voltage	LED/Lamp Number	Catalog Number
LED (LEDs not included) ①	Full voltage	—	Bayonet base	**10250T97L**
	Transformer AC only 50/60 Hz	24		**10250T89L**
		120		**10250T63L**
		208		**10250T64L**
		240		**10250T65L**
		277		**10250T82L**
		380		**10250T66L**
		480		**10250T67L**
		600		**10250T68L**
Incandescent	Full voltage AC or DC	6		**10250T69**
		12		**10250T70**
		24/28		**10250T79**
		32		**10250T83**
	Resistor AC or DC	120	120MB	**10250T80**
		240		**10250T81**
	Transformer AC only 50/60 Hz	24	#755	**10250T89**
		120		**10250T63**
		208		**10250T64**
		240		**10250T65**
		277		**10250T82**
		380		**10250T66**
		480		**10250T67**
		600		**10250T68**

Note

① These units do not include lamps. Order LED separately to match lens color, see **Page V7-T1-269**.

Alternate Lenses for Illuminated Push-Pull Devices

Standard

Side-Lighted Anodized Aluminum Ring

Heavy-Duty Aluminum

Jumbo Lens

Lens Color	Incandescent Suffix Code	LED Suffix Code ①	Catalog Number
Standard			
Red	**C47**	**RD**	**10250TC47**
Red (EMERG. STOP)	**C53**	**ED**	**10250TC53**
Green	**C48**	**GD**	**10250TC48**
Blue	**C49**	**LD**	**10250TC49**
Amber	**C50**	**AD**	**10250TC50**
White	**C51**	**WD**	**10250TC51**
Clear	**C52**	**CD**	**10250TC52**
Side-Lighted Anodized Aluminum Ring			
Red	**C57**	**RS**	**10250TC57**
Red (EMERG. STOP)	**C63**	**ES**	**10250TC63**
Green	**C58**	**GS**	**10250TC58**
Blue	**C59**	**LS**	**10250TC59**
Amber	**C64**	**AS**	**10250TC64**
Yellow	**C60**	**YS**	**10250TC60**
White	**C61**	**WS**	**10250TC61**
Clear	**C62**	**CS**	**10250TC62**
Heavy-Duty Aluminum with Transparent Center			
Red	**C65**	**RH**	**10250TC65**
Green	**C66**	**GH**	**10250TC66**
Amber	**C67**	**AH**	**10250TC67**
White	**C68**	—	**10250TC68**
Jumbo Lens—50 mm			
Red	—	—	**10250TC77**

Buttons for Non-Illuminated Push-Pull Devices

Standard

Jumbo Mushroom Head

Color	Suffix Code	Catalog Number
Standard		
Red	**B62**	**10250TB62**
Red (EMERG. STOP)	**B63**	**10250TB63**
Green	**B61**	**10250TB61**
Black	**B60**	**10250TB60**
Blue	**B64**	**10250TB64**
Jumbo Mushroom Head ② (Anodized) Aluminum		
Red	**J62**	**10250TJ62**
Red (EMERG. STOP)	**J63**	**10250TJ63**
Green	**J61**	**10250TJ61**
Black	**J60**	**10250TJ60**
Yellow	**J64**	**10250TJ64**

Notes

① Suffix codes should only be used for assembling composite catalog numbers. To order lens above, order by catalog number.

② Anodized aluminum head is not suitable for use in ultraviolet light applications.

Legend Plates

For a complete listing of available legend plates see **Pages V7-T1-260** to **V7-T1-262**.

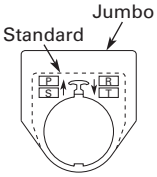

Selector Switch Units

UL (NEMA) Type 3, 3R, 4, 4X, 12, 13

- Two-, three- and four-position maintained
- Non-illuminated and illuminated

Two-Position Maintained Switch

Two-Position Selector Switch

Operator Position ①		Operator Action ②	Contact Type	Mounting Location A	Mounting Location B	Non-Illuminated Black Knob Catalog Number ③	Non-Illuminated Black Lever Catalog Number ③	Illuminated—120V Transformer Red Knob Catalog Number ③	Illuminated—120V Transformer Red Lever Catalog Number ③
X	0	M M	1NC			10250T20K**B**	10250T20L**B**	10250ED1117-K**R**	10250ED1117-L**R**
0	X		1NO						

Three-Position Maintained Switch

Three-Position Selector Switch

Operator Position ①			Operator Action ②	Contact Type	Mounting Location A	Mounting Location B	Non-Illuminated Black Knob Catalog Number ③	Non-Illuminated Black Lever Catalog Number ③	Illuminated—120V Transformer Red Knob Catalog Number ③	Illuminated—120V Transformer Red Lever Catalog Number ③
X	0	0	M M M	1NO			10250T21K**B**	10250T21L**B**	10250ED1117-2K**R**	10250ED1117-2L**R**
0	0	X		1NO						

Three-Position Maintained Switch

X	0	0		1NO			10250T22K**B**	10250T22L**B**	10250ED1117-3K**R**	10250ED1117-3L**R**
0	X	0		2NC (Series)						
0	0	X		1NO						

Three-Position Maintained Switch

Four-Position Selector Switch

Operator Position ①				Operator Action ②	Contact Type	Mounting Location A	Mounting Location B	Non-Illuminated Black Knob Catalog Number ③	Non-Illuminated Black Lever Catalog Number ③	Illuminated—120V Transformer Red Knob Catalog Number ③	Illuminated—120V Transformer Red Lever Catalog Number ③
X	0	0	0	M M M M	1NC			10250T46K**B**	10250T46L**B**	10250ED1117-4K**R**	10250ED1117-4L**R**
0	X	0	0		1NO						
0	0	X	0		1NO						
0	0	0	X		1NC						

Color Selection

Illuminated

Color	Code Letter	Color	Code Letter	Color	Code Letter
Red	**R**	White	**W**	Amber	**A**
Green	**G**	Blue	**B**	Clear	**C**

Non-Illuminated

Color	Code Letter	Color	Code Letter	Color	Code Letter
Black	**B**	Green	**G**	Blue	**L**
Red	**R**	White	**W**	Orange	**O**

Notes

① X = closed circuit, 0 = open circuit.
② M = Maintained.
③ To order different type or color selector switch, substitute the underlined character with appropriate suffix code from the Color Selection table. Example: 10250T20K**G**.

1

Selector Switch Selection

Cam and Contact Block Selection

Selector switches in their varied forms (two-position, three-position and four-position) are a big factor contributing to the great flexibility of control that a well rounded line of "pushbuttons" can achieve. Because of their flexibility, they tend to cause difficulty with product selection and application. The following systematic approach should simplify that task.

Cam and contact block selection is better understood if you:

- Work with each incoming and outgoing wire/circuit separately.
- Recognize the terms NO and NC only identify the type of contact by its mode before mounting to the operator. The "X-O" table (**Page V7-T1-240**) shows how that contact will act after assembly to the operator with the selected cam shape. X = closed circuit, O = open circuit.
- Up to six NO or NC contacts may be mounted behind each plunger location for a total of twelve contacts. Single circuit contact blocks have only one plunger with the other side of the block "open." Therefore, single circuit contact blocks transmit motion to blocks behind them only for the position containing the circuit.
- Each cam has two separate lobes, each of which operates one of the two contact block plungers independently of each other. Those are identified as position A (locating nib side) and position B (opposite of locating nib). The position designations give direction in selecting and mounting of the contact blocks.

Contact Circuit Locations

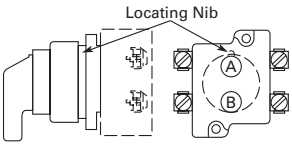

Systematic Approach

Application: **HAND-OFF-AUTO** selector switch. In this circuit, one incoming line is distributed to two other outgoing circuits by the switch. The two circuits can be looked at individually.

Step 1: Elementary Diagram.
Construct on paper, or in your mind, a simple elementary diagram of the switching scheme as follows:

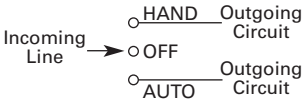

Step 2: "X-O" Pattern.
From the elementary diagram, you can construct an "X-O" diagram which describes when the contacts are to be closed (X) or open (O) in the various positions of the switch. The "X-O" for the **HAND** circuit looks like this:

HAND OFF AUTO
X O O

In this circuit, you want a contact closed on the left (HAND) but open in the center and right.

For the **AUTO** circuit, the "X-O" diagram would look like this:

HAND OFF AUTO
O O X

Putting them together, the complete "X-O" diagram is:

X O O
O O X

Once the "X-O" diagram has been generated the next step is to select the cam and contact block, or blocks, needed to perform the desired "X-O" functions. The selection tables on the following pages list the various types (shapes) of cams by number to choose from and the type of contact and position to achieve the function outlined in your "X-O" diagram.

Step 3: Cam Selection.
The cam you select determines the operation of all contact blocks mounted to the operator. It is selected on the basis that it provides the simplest circuitry for the desired "X-O" diagram. The selection tables show all the "X-O" combinations. For the purpose of this example, the applicable portion of those tables is shown on this page.

Now to make the cam selection, make a simple worksheet such as:

	Cam 2	Cam 3
X O O	(A)NO-(B)NC	**(A)NO**
O O X	(B)NO	**(B)NO**

It becomes immediately obvious that cam 3 is the better choice for two reasons, (1) the series combination can be avoided making it simpler to wire, (2) only two contacts are required, which is less expensive than the three contacts required by cam 2.

Step 4: Contact Block Selection.
Having selected the cam, contact block selection is simply a matter of gathering the A position and B position circuits into pairs which make up the most convenient contact block arrangement. If there is an imbalance in the number of circuits under A or B, then single circuit blocks must be selected for these leftover circuits.

Back to the worksheet, having selected cam 3 do this:

Step 5: Selector Switch Operator.
Lastly, you have to choose from the many types of operators—knob and lever in various colors or keyed. Also what combinations of maintained and spring return functions are required. Selection of these operators can be found on **Page V7-T1-242**. For the example in step 4 you may want a three-position maintained black knob, cam 3—Catalog Number 10250T1323.

The Complete Switch:
10250T1323 with one 10250T2 or, for one composite catalog number, 10250T21KB found on **Page V7-T1-237.**

Diagrams
Circuits shown illustrate connections to obtain a selector switch circuit combination and are shown with their appropriate line diagrams. Field wiring of jumper connections required as shown.

X = Closed circuit
O = Open circuit

Wiring of Jumper Connections

Series Connection

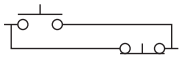
Parallel Connection

Four-position selector switches are limited to four contact blocks.

Contact Blocks
For selection and number of available contact blocks per operator, see **Pages V7-T1-265** to **V7-T1-268**.

Example Selection Table

No.	"X-O" Pattern			Cam Code #2 Top A	Cam Code #2 Bottom B	Cam Code #3 Top A	Cam Code #3 Bottom B
1	X	O	O	① NO	NC	NO	—
4	O	O	X	—	NO	—	NO

Two-Position Selector Switch Contact Block Selection

No.	Desired Circuit and Operator Position		Contact Blocks Required to Accomplish Circuit Function: Top Plunger A		Bottom Plunger B
1	X	O	NC	or	NC
2	O	X	NO	or	NO

Note
① Wired in series.

1

Three-Position Switch—Cam and Contact Block Selection

No.	Desired Circuit and Operator Position			Contact Blocks Required to Accomplish Circuit Function (Jumpers must be installed where indicated) — Operator with Cam Code #2, Mounting Location: Top Plunger A	Operator with Cam Code #2, Mounting Location: Bottom Plunger B	Operator with Cam Code #3, Mounting Location: Top Plunger A	Operator with Cam Code #3, Mounting Location: Bottom Plunger B
1	X	0	0	NO	NC	NO	
2	X	X	0		NC		NC
3	X	0	X	NO		NO	NO
4	0	0	X		NO		NO
5	0	X	X	NC	NO	NC	
6	0	X	0	NC		NC	NC

Four-Position Switch—Contact Block Selection

No.	Desired Circuit and Operator Position				Contact Blocks Required to Accomplish Circuit Function — Mounting Location: Top Plunger A	Bottom Plunger B
1	X	0	0	0	NC	
2	0	X	0	0		NO
3	0	0	X	0	NO	
4	0	0	0	X		NC
5	X	0	0	X	NC	NC
6	0	X	X	0	NO	NO
7	0	0	X	X	NO	NC
8	X	X	0	0	NC	NO
9	0	X	0	X		NO NC
10	X	0	X	0	NC NO	
11	X	X	X	0	NC NO	NO
12	0	X	X	X	NO	NC NO
13	X	0	X	X	NO NC	NC
14	X	X	0	X	NC	NO NC

Selector Switch Operators

Key Operators

UL (NEMA) Type 3, 3R, 4, 4X, 12, 13

Two-Position Maintained ①

Key Operators with Cam

Positions	Operator Action ②	Cam Code ③	Optional Key Removal Positions ④	Vertical Mounting Catalog Number	Horizontal Mounting Catalog Number
Two-position—60° throw	M M	1	1, 2, 3	**10250T1511_**	**10250T1611_**
	M S	1	2	**10250T1571_**	**10250T1581_**
Three-position—60° throw	M M M	2	1–7	**10250T1522_**	**10250T1622_**
		3		**10250T1523_**	**10250T1623_**
	M S M	2	1, 4, 5	**10250T1532_**	**10250T1632_**
		3		**10250T1533_**	**10250T1633_**
	M S S	2	4	**10250T1542_**	**10250T1642_**
		3		**10250T1543_**	**10250T1643_**
	M M S	2	2, 4, 6	**10250T1652_**	**10250T1662_**
		3		**10250T1653_**	**10250T1663_**
Four-position—40° throw	M M M M	7	7	**10250T1677_**	**10250T1687_**

Notes

① Horizontal mount, key removal #1 keyed selector switch, cam 1 shown.

② M = Maintained. S = Spring return in direction of arrow (R).

③ For selection of the proper cam and contact block to obtain the proper circuit sequence, see selection instructions and tables on **Pages V7-T1-238**, **V7-T1-239** and **V7-T1-240**.

④ Choose key removal position required for application from table on **Page V7-T1-242**. Add key removal code no. to listed catalog number. Example: 10250T1511**2**.

1

Key Removal Positions

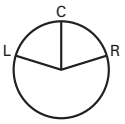

Code Suffix	Key Removal Position
1	Right only
2	Left only
3	Right and left
4	Center only
5	Right and center
6	Left and center
7	All positions

Note: Key removal in "spring return from" positions not recommended.

Replacement Keys or Dissimilar Locks for Key Operators

Operators listed on **Page V7-T1-242** have identical locks and keys (Key Code H661) Catalog Number 10250ED824. For dissimilar lock and key combinations, see listing on this page.

Replacement Key

Description	Catalog Number
Replacement keys (code H661)	**10250ED824**

Selector Switch Operators with Dissimilar Locks and Keys (UL [NEMA] 4, 4X and 13)

The locks in all key operators listed on **Pages V7-T1-221, V7-T1-242** and **V7-T1-379** are identical and use key code number H661. Two keys are supplied with every lock. For additional code number H661 keys, order **Catalog Number 10250ED824**. For others, order 10250ED1130 and designate lock number. When dissimilar locks for each operator or each group of operators are required, select from the lock and key combination listed below. **When Ordering Operator Only** or a complete control unit with a substitute lock, order from table below and add "except Lock and Key Code No. …"

"H" Series Locks without Master Key—with Key Slot Cover

Lock and Key Code Numbers

H501	**H635**	**H663**
H620	**H639**	**H675**
H621	**H643**	**H683**
H634	**H654**	**H688**

"M" Series Locks with Master Key—with Key Slot Cover

Lock and Key Code Numbers

MD1	**MD14**	**ME8**	**MJ6**
MD2	**MD15**	**ME11**	**MJ10**
MD3	**MD16**	**ME16**	**MJ11**
MD4	**MD19**	**ME17**	**MJ13**
MD5	**MD20**	**ME18**	**MJ15**
MD7	**ME2**	**ME19**	**MJ16**
MD9	**ME3**	**MJ1**	**MD17**
MD10	**ME5**	**MJ3**	
MD11	**ME6**	**MJ4**	
MD13	**ME7**	**MJ5**	

Master Keys for Above Locks

Application	Catalog Number
For code:	
MD1–MD20	**10250ED825-3**
ME2–ME18	**10250ED825-4**
MJ1–MJ16	**10250ED825-5**

Selector Switch Operators with Caps

UL (NEMA) Type 3, 3R, 4, 4X, 12, 13

Selector Switch Operators with Caps

	Positions	Operator Action ②	Black Knob Selector Switch—Vertical Mounting ③ Cam Code ④	Black Knob Selector Switch—Vertical Mounting ③ Catalog Number	Black Lever Selector Switch—Vertical Mounting ③ Cam Code ④	Black Lever Selector Switch—Vertical Mounting ③ Catalog Number
Two-Position Maintained ①	Two-position—60° throw	M M	1	**10250T1311**	1	**10250T3011**
		M S	1	**10250T1371**	1	**10250T3071**
Three-Position Maintained ⑤	Three-position—60° throw	M M M	2	**10250T1322**	2	**10250T3022**
			3	**10250T1323**	3	**10250T3023**
		M S M	2	**10250T1332**	2	**10250T3032**
			3	**10250T1333**	3	**10250T3033**
		M S S	2	**10250T1342**	2	**10250T3042**
			3	**10250T1343**	3	**10250T3043**
		M M S	2	**10250T1352**	2	**10250T3052**
			3	**10250T1353**	3	**10250T3053**
	Four-position—40° throw	M M M M	7	**10250T1367**	7	**10250T3067**

Notes

① Black knob selector switch, cam 1 shown.
② M = Maintained. S = Spring return in direction of arrow (R).
③ Field convertible to horizontal mounting or order operator only and separate operator cap.
④ For selection of the proper cam and contact block to obtain the proper circuit sequence, see selection instructions and tables on **Pages V7-T1-238**, **V7-T1-239** and **V7-T1-240**.
⑤ Black lever selector switch, cam 3 shown.

Selector Switch Operators without Caps

Operators can be ordered with caps assembled to them by adding the code number from the table on this page to the end of catalog number below.
Example: 10250T4011**KB**

Two-Position Selector Switch Maintained

Selector Switch Operators without Caps

Positions	Operator Action ①	Cam Code ②	Catalog Number
Two-position—60° throw		1	**10250T4011**
		1	**10250T4081**
Three-position—60° throw		2	**10250T4022**
		3	**10250T4023**
		2	**10250T4032**
		3	**10250T4033**
		2	**10250T4042**
		3	**10250T4043**
		2	**10250T4052**
		3	**10250T4053**
Four-position—40° throw		7	**10250T4067**

Knob

Lever

Lever for Use with Maintained Operators

Coin Slot

Operating Caps

Color	Knob Catalog and Code Number	Lever Catalog and Code Number	Color	Lever ③ Catalog and Code Number	Coin Slot Catalog and Code Number
Black	**10250TKB**	**10250TLB**	Black	**10250TSB**	**10250TCB**
Red	**10250TKR**	**10250TLR**	Red	**10250TSR**	**10250TCR**
Green	**10250TKG**	**10250TLG**	Green	**10250TSG**	**10250TCG**
Yellow	**10250TKY**	**10250TLY**	Yellow	**10250TSY**	**10250TCY**
White	**10250TKW**	**10250TLW**	White	**10250TSW**	**10250TCW**
Gray	**10250TKA**	**10250TLA**	Gray	**10250TSA**	**10250TCA**
Blue	**10250TKL**	**10250TLL**	Blue	**10250TSL**	**10250TCL**
Orange	**10250TKD**	**10250TLO**	Orange	**10250TSO**	**10250TCO**

Notes

① M = Maintained. S = Spring return in direction of arrow (R).
② For selection of the proper cam and contact block to obtain the proper circuit sequence, see selection instructions and tables on **Pages V7-T1-238**, **V7-T1-239** and **V7-T1-240**.
③ Designed for added ingress protection. For use in maintained operators only.

1

Illuminated Selector Switch Operators

Illuminated Selector Switches without Caps

Two-Position Selector Switch Maintained

Operator without Knob or Lever

Positions	Operator Action ①	Transformer Type—50/60 Hz, 6 Volt #755 Lamp: Cam Code ②	Voltage	Code Number and Catalog Number ③	Full Voltage Type—AC or DC ④, Lamps: 6V—#755, 12V—#756, 24V—#757, 48V—#1835, 120/240V—120MB: Cam Code ②	Voltage	Code Number and Catalog Number ③
Two-position—60° throw	M M	1	24	**10250T5961**	1	6	**10250T6201**
			120	**10250T5971**		12	**10250T6211**
			208	**10250T6511**		24	**10250T6221**
			240	**10250T5981**		48	**10250T6231**
			380	**10250T5991**		120	**10250T6361**
			480	**10250T6001**		240 ⑤	**10250T6371**
			600	**10250T6011**			
Three-position—60° throw	M M M	+ 2 or 3	24	**10250T602_**	+ 2 or 3	6	**10250T624_**
			120	**10250T603_**		12	**10250T625_**
			208	**10250T652_**		24	**10250T626_**
			240	**10250T604_**		48	**10250T627_**
			380	**10250T605_**		120	**10250T638_**
			480	**10250T606_**		240 ⑤	**10250T639_**
			600	**10250T607_**			
	M M S	+ 2 or 3	24	**10250T654_**	+ 2 or 3	6	**10250T612_**
			120	**10250T620_**		12	**10250T632_**
			208	**10250T655_**		24	**10250T642_**
			240	**10250T656_**		48	**10250T672_**
			380	**10250T657_**		120	**10250T622_**
			480	**10250T658_**		240	**10250T682_**
			600	**10250T659_**			
	S M M	+ 2 or 3	24	**10250T660_**	+ 2 or 3	6	**10250T613_**
			120	**10250T621_**		12	**10250T633_**
			208	**10250T661_**		24	**10250T643_**
			240	**10250T662_**		48	**10250T673_**
			380	**10250T663_**		120	**10250T623_**
			480	**10250T664_**		240	**10250T683_**
			600	**10250T665_**			
	S M S	+ 2 or 3	24	**10250T614_**	+ 2 or 3	6	**10250T628_**
			120	**10250T615_**		12	**10250T629_**
			208	**10250T653_**		24	**10250T630_**
			240	**10250T616_**		48	**10250T631_**
			380	**10250T617_**		120	**10250T640_**
			480	**10250T618_**		240 ⑤	**10250T641_**
			600	**10250T619_**			
Four-position—40° throw	M M M M	7	24	**10250T6087**	7	6	**10250T6327**
			120	**10250T6097**		12	**10250T6337**
			208	**10250T6547**		24	**10250T6347**
			240	**10250T6107**		48	**10250T6357**
			380	**10250T6117**		120	**10250T6427**
			480	**10250T6127**		240 ⑤	**10250T6437**
			600	**10250T6137**			

Notes

① M = Maintained. S = Spring return in direction of arrow (R).

② For selection of the proper cam and contact block, to obtain the proper circuit sequence, see selection tables on **Pages V7-T1-238**, **V7-T1-239** and **V7-T1-240**.

③ Operator includes lens gasket and lens attachment screws.

④ Full voltage light units can be used at other than listed voltages by changing lamp. Replacement lamps are listed on **Page V7-T1-269**.

⑤ Resistor type. May generate excess heat if used in high density.

Knob

Lever

Illuminated Knobs and Levers

Color ①	Knob Code Number and Catalog Number	Lever Code Number and Catalog Number
Red	**10250TER**	**10250TFR**
Green	**10250TEG**	**10250TFG**
Yellow	**10250TEA**	**10250TFA**
Blue	**10250TEL**	**10250TFL**
Clear	**10250TEC**	**10250TFC**
White	**10250TEW**	**10250TFW**
Amber	**10250TEM**	**10250TFM**

Joystick Units

Two-Position Joystick

Joystick Units—UL (NEMA) Type 3, 3R, 4, 4X, 12, 13

Operator Position ②

Up	Center	Down	Operator Action ③	Contact Type	Mounting Location A	Mounting Location B	Two-Position Assembled Unit Catalog Number ④
X	O	O	M S	1NC			**10250T452-3X**
O	O	X	M S	1NC			

Notes

① Amber, clear and white lenses have a black arrow (pointer), red, green and blue lenses have a white arrow (pointer).
② X = closed circuit, O = open circuit.
③ M = Maintained. S = Spring return in direction of arrow (R).
④ Field convertible momentary to maintained or vice versa.

1

Joysticks

Two-Position Joystick Operators

The device mounts in the standard 30.5 mm mounting hole. Allow sufficient panel space for lever movement.

The maximum travel of the knob operator (full up to full down) is 2.2 in (24°) momentary, 2.5 in (30°) maintained, but ample space for lever operation must be allowed. These operators are field convertible from momentary to maintained operation or vice versa.

The use of NC contacts is preferred because they provide positive drive contact opening and a direct relationship between lever movement and affected terminal, i.e., up movement affects the top terminals.

Application Caution

Joystick operators are not recommended on certain DC applications above 24 Vdc which may involve lightly engaging the contacts (teasing) to achieve speed control, positioning, jogging, etc. Excessive arcing and deterioration of the contacts will occur.

Two-Position Joystick Operator

Two-Position Joystick Operators—UL (NEMA) Type 3, 3R, 4, 4X, 12, 13

Contact Block Limitations	Two-Position Operator Only—AC Applications Only Description ①	Catalog Number
Momentary Mode 4NC contact blocks max. 3NO contact blocks max.	Momentary up and down	**10250T452**
	Maintained up—momentary down	**10250T4521**
	Maintained down—momentary up	**10250T4522**
Maintained Mode 2 contact blocks max.	Maintained up and down	**10250T4525**

Contact Block Operation and Selection

Handle Position ② Up	Center	Down	Contact Block Type ④	Mounting Location ②③ Top A	Bottom B	Catalog Number
X	0	0	1NC			**10250T51**
0	0	X	1NC			**10250T51**
0	X	0	2LONC (Series)			**10250T45**
X	0	0	1NC			**10250T3**
0	0	X	1NC			
X	X	0	1LONC			**10250T45**
0	X	X	1LONC			
X	0	0	1NC			**10250T44** ⑤
0	0	X	1NO			
0	0	X	1NC			
X	0	0	1NO			

A and B Mounting Location

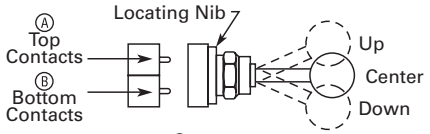

Up	Center	Down
NC Contact at Top Is Closed, NO at Bottom Is Closed	All NC and NO Contacts Are Open (1/2 Way), Late Opening NC Is Closed	NC Contact at Bottom Is Closed, NO at Top Is Closed

Notes

① Field convertible momentary to maintained or vice versa. To expedite shipment of maintained types, order momentary operator 10250T452 which is a stocked device.

② Bolded circuit corresponds to "X-0" circuit selection. X = closed circuit, 0 = open circuit.

③ See above for "A" and "B" mounting location.

④ NO = normally open, NC = normally closed, LONC = late opening normally closed.

⑤ Four circuits in single block depth—rated 300V max.

Four-Position Joystick Operators

The joystick operated control unit is intended for AC application only. For other use, see **Application Caution** on preceding page.

The panel area required for the four-position operator is equivalent to two standard pushbutton operators.

The latch holds the lever in the center position. The trigger latch must be released before lever can moved into any position.

Four-Position Joystick Operator

Four-Position Joystick Operator with Latch

Four-Position Joystick Operators—UL (NEMA) Type 3, 3R, 4, 4X, 12, 13

Contact Block Limitations	Description ①	Catalog Number
Operator Only—AC Application Only		
Four contact blocks max.—two in each position	Four-position—without latch	**10250T451_**
	Four-position—with latch	**10250T461_**
Hole Plug		
Four contact blocks max.—two in each position	To plug unused hole	**10250TA7**

Field Conversion—Gate

The factory assembled four-position operator is assembled with a gate arranged for four handle positions.

Handle Positions

Four-Position Gate

Three additional gates, supplied with every operator, allow on the job conversion to three- or eight-position operation as illustrated.

Two-, Three- or Eight-Position Operation

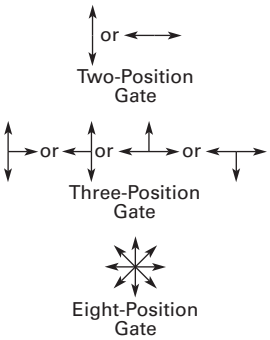

The eight-position gate controls the four functions shown as "Up," "Down," "Left" and "Right." The remaining four diagonal positions each actuate two adjacent functions; for example, "Left Down" actuates both "Left" and "Down." The operator may be arranged for spring return of handle to center position, or maintained in up to eight positions (see description of maintained position operator).

Adjacent Functions

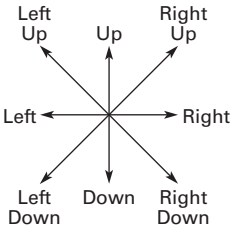

Maintained Position

For maintained position (non-spring return), locate required maintained position or positions of operating lever and add appropriate suffix number to the catalog number selected from the table above.

Maintained Positions

Maintained Positions Up	Down	Left	Right	Suffix Number
X	—	—	—	**1**
—	—	—	—	**2**
—	X	—	—	**3**
—	—	X	—	**4**
—	—	—	—	**5**
X	—	X	—	**6**
X	—	—	X	**7**
—	X	X	—	**8**
—	X	—	X	**9**
—	—	X	X	**10**
X	X	X	—	**11**
X	X	—	X	**12**
X	—	X	X	**13**
—	X	X	X	**14**
X	X	X	X	**15**

On an eight-position gate, when an adjacent vertical and horizontal position are both maintained, the included diagonal position is also maintained.

Note

① Momentary operators—spring return to center. For maintained operators add suffix code from table on this page. Example: 10250T451**10**. Operator without latch, maintained in left and right positions.

Contact Block Operation

Contact blocks mount directly to the back of the operator. For reliable operation, the maximum number of contact blocks that should be installed behind each operator lever is two (four total).

The figure below identifies the circuits activated by each of the eight possible lever positions. Contact block plungers 1, 2, 3, 4 are depressed (change state) when handle is in the position indicated by arrows below.

Circuit Activation

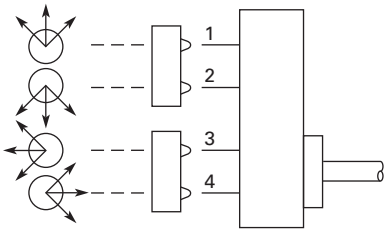

Note: Joystick in its resting state, center position, does not activate contact block plungers.

Ordering Example:

Suppose you are looking for a four-position momentary joystick without a latch and the following circuit arrangements.
X = Closed Circuit, O = Open Circuit.

Example Circuit Arrangements

Circuit	Up	Down	Left	Right
1st	X	X	X	X
2nd	X	O	O	X

The contact blocks and their mounting locations would be as follows:

Example Contact Blocks and Locations

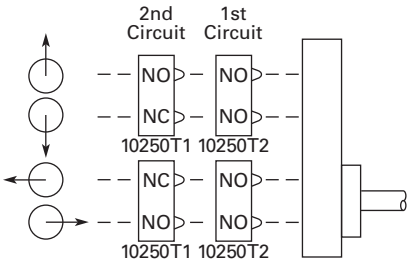

A complete bill of material for this example would include:

Example Order

Qty.	Catalog Number
1	**10250T451**
2	**10250T2**
2	**10250T1**

Blank Legend Plates for Joystick Operators

When ordering engraved legend plates, order by catalog number and insert the following into order notes:

- Legend required
- Size of characters: 3/16, 1/8, 3/32 in (4.8, 3.2, 2.4 mm)
- Location by letter (A–N)

Locations K and M can accommodate up to two lines horizontally; L and N up to two lines vertically.

Maximum number of characters:

- Horizontal
  3/16 in—13, 1/8 in—14, 3/32 in—19
- Vertical
  3/16 in—10, 1/8 in—13, 3/32 in—14

Ordering Example:

Two-position legend plate to be marked "UP" "DOWN."

Catalog No. **10250TJ2S4STAMP**
Letter Size: 3/16 in (4.8 mm)
Pos. K—UP
Pos. M—DOWN

Two-Position

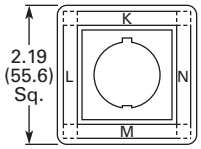

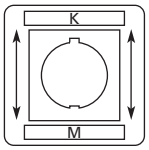

Catalog Number	Catalog Number
Blank Plate	
10250TJS3	**10250TJS4**
Engraved Plate	
10250TJS3STAMP	**10250TJS4STAMP**

Four-Position

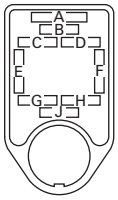

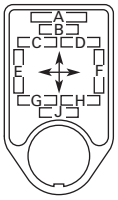

Catalog Number	Catalog Number
Blank Plate	
10250TJS1	**10250TJS2**
Engraved Plate	
10250TJS1STAMP	**10250TJS2STAMP**

Roto-Push Units

Two-Position Momentary

Complete assembled two-position Roto-Push® Units are listed below. These operators have black flush buttons and are arranged for vertical mounting. Order legend plates separately.

Mounting Location

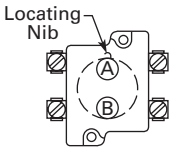

Roto-Push—Black Flush Button

Roto-Push Units—UL (NEMA) Type 3, 3R, 4, 4X, 12, 13

Typical Applications (Most Common Examples)	Operator Position ① Collar Left Normal	Collar Left Depressed	Collar Right Normal	Collar Right Depressed	Contact Type	Mounting Location A	Mounting Location B	Catalog Number ②
Two-Position								
FORWARD/REVERSE; HIGH/LOW; OPEN/CLOSE; UP/DOWN; etc.	0 0	0 X	0 0	X 0	1NO 1NO			**10250T2411-2**
JOG/RUN; MAN./AUTO; etc.	0 0	X 0	0 X	X X	1NO 1NO			**10250T24111-2**
RUN/JOG; START/JOG; etc.	0 X	X X	0 0	X 0	1NO 1NC			**10250T24111-1**
SAFE/RUN; etc.	0 0	0 0	0 X	X X	1NO 1NO			**10250T2415-2**

Two-Position Latched

The two-position Roto-Push Latch Unit is fully assembled and only requires a legend plate for a great variety of applications. When the selector collar is in the extreme left position, the button is in the free or normal position and can be operated as a standard pushbutton. Rotating the collar to the extreme right position automatically depresses and latches the button in the depressed position. The white filled groove in the button indicates the selector collar position. The selector collar has spring return to the left position except when in the extreme right latched position.

Red Long

Rotates to a Latch-Out Mode

Color and Type of Button	Contact Block	Vertical Mounting Catalog Number
Red long	1NC	**10250T72**
	2NC	**10250T73**

Notes

① X = closed circuit, 0 = open circuit.

② Roto-Push assembled with contact blocks.

1

Roto-Push Operators

Roto-Push Components

A Roto-Push control unit combines the function of a pushbutton and a selector switch. The contacts are operated by the combined action of rotating the outer collar and pushing a button contained in the collar.

In selecting the cam and contact blocks for the listed function, the analysis involves considering the function with the collar rotated to the given position with the button free (designated as "N") and then in that same position with the button depressed (designated "D"). This is done for each rotational position of the collar.

When Ordering Specify

- Catalog number of operator with cam code suffix from tables below and on following pages, Example: 10250T241**1**.
- Catalog number(s) for contact blocks and legend plates if required.
- To select the cam and contact blocks needed for two-position and three-position switches, use the tables on following pages.

Operator and Cam

Operator and Cam

Color and Type of Button	Cam Code No. Select from Tables	Vertical Mounting Catalog and Code Number	Horizontal Mounting Catalog and Code Number
Black flush	+ 1 to 18	**10250T241_**	**10250T251_**
Red flush ①		**10250T242_**	**10250T252_**
Green flush		**10250T243_**	**10250T253_**
Black long		**10250T261_**	**10250T271_**
Red long ①		**10250T262_**	**10250T272_**
Green long		**10250T263_**	**10250T273_**

Two-Position Roto-Push Operator—Rotates to a Latch-Out Mode

Special Rotor Latch

This differs from the other Roto-Push operators in that as the collar is rotated to the right it depresses the button and releases the button when rotated left. But the button in the released position can be momentarily pushed independent of the collar or its position. As the button is depressed by rotating the collar, the button also rotates and indicates its mode by a white line on the button face. This button can be used as an emergency stop or latched stop.

Special Roto Latch—Red Long Button

Special Rotor Latch—UL (NEMA) Type 3, 3R, 4, 4X, 12, 13

Color and Type of Button	Vertical Mounting Catalog Number
Red long	**10250T3213**
Black long	**10250T3214**

Note

① Not to be used for emergency stop application.

Cam and Contact Block Selection for Two-Position Roto-Push

Combination Number	Collar Position / Circuit Sequence ① N	D	N	D	Cam Code 1	Cam Code 2	Cam Code 3	Cam Code 4	Cam Code 5	Cam Code 6
1	0	0	0	X	A NO	A NO	—	—	A NO	—
2	0	0	X	0	—	—	—	A NC B NO	A NC B NO	—
3	0	0	X	X	—	—	—	—	B NO	A NO
4	0	X	0	0	B NO	A NC B NO	—	—	—	A NC B NO
5	0	X	0	X	A NO B NO	B NO	—	A NO	—	—
6	0	X	X	0	—	—	—	—	—	—
7	0	X	X	X	—	—	A or B NO	B NO	—	B NO
8	X	0	0	0	—	—	A or B NC	B NC	—	B NC
9	X	0	0	X	—	—	—	—	—	—
10	X	0	X	0	A NC B NC	B NC	—	A NC	—	—
11	X	0	X	X	B NC	A NO B NC	—	—	—	A NO B NC
12	X	X	0	0	—	—	—	—	B NC	A NC
13	X	X	0	0	—	—	—	A NO B NC	A NO B NC	—
14	X	X	X	0	A NC	A NC	—	—	A NC	—

Series and Parallel Connections

A NO
B NC

Series Connection

A NO
B NC

Parallel Connection

The connections are not made at the factory. They are illustrated in the selection table as requirements, but must be made on the job.

Circuit Location

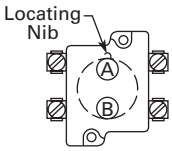

Letters "A" and "B" represent the locations which the two circuits of a contact block will occupy in relation to the locating nib of the operator.

Note

① N = Button in free or normal position. D = Button depressed.

1

Cam and Contact Block Selection for Two-Position Roto-Push, continued

Combination Number	Collar Position / Circuit Sequence ① N	D	N	D	Cam Code 10	Cam Code 11	Cam Code 12	Cam Code 13	Cam Code 14
15	0	0	0	X	—	A NO B NO	—	—	—
16	0	0	X	0	—	A NC B NO	A NC	A or B NC	A NC
17	0	0	X	X	B NO	B NO	—	—	—
18	0	X	0	0	A NO	A NO B NC	—	—	B NO
19	0	X	0	X	—	A NO	B NO	—	—
20	0	X	X	0	—	—	—	—	A NC B NO
21	0	X	X	X	A NO B NO	A NO B NO	A NC B NO	—	—
22	X	0	0	0	A NC B NC	A NC B NC	A NO B NC	—	—
23	X	0	0	X	—	—	—	—	A NO B NC
24	X	0	X	0	—	A NC	B NC	—	—
25	X	0	X	X	A NC	A NO B NO	—	—	B NC
26	X	X	0	0	B NC	B NC	—	—	—
27	X	X	0	0	—	A NO B NC	A NO	A or B NO	A NO
28	X	X	X	0	—	A NC B NC	—	—	—

Series and Parallel Connections

A NO
B NC

Series Connection

A NO
B NC

Parallel Connection

The connections are not made at the factory. They are illustrated in the selection table as requirements, but must be made on the job.

Circuit Location

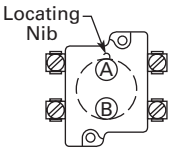

Letters "A" and "B" represent the locations which the two circuits of a contact block will occupy in relation to the locating nib of the operator.

Note

① N = Button in free or normal position. D = Button depressed.

Cam and Contact Block Selection for Three-Position Roto-Push

Collar Position

Combination Number	Circuit Sequence ① N	D	N	D	N	D	Cam Code 7	Cam Code 8	Cam Code 9	Cam Code 15 ②	Cam Code 16	Cam Code 17	Cam Code 18
1	0	0	0	0	0	X	A NO, B NO	A NC, B NO	—	B NO ②	B NO	—	A NC, B NO
2	0	0	0	0	X	X	—	—	B NO	—	—	A NO	—
3	0	0	0	X	0	0	—	—	A NO, B NC	—	—	—	A NO, B NO
4	0	0	0	X	0	X	—	—	—	—	—	—	B NO
5	0	0	0	X	X	X	—	—	A NO ②	—	—	—	—
6	0	0	X	X	0	0	—	A NO, B NO	—	—	—	—	—
7	0	0	X	X	0	X	—	B NO	—	—	—	—	—
8	0	0	X	X	X	0	A NC, B NO	—	—	—	—	—	—
9	0	0	X	X	X	X	B NO	—	—	—	—	—	—
10	0	X	0	0	0	0	A NO, B NC	A NO, B NC	—	A NO ②	A NO	B NO	A NO, B NC
11	0	X	0	0	0	X	A NO	—	—	A NO, B NO	A NO, B NO	—	—
12	0	X	0	0	X	X	—	—	—	—	—	A NO, B NO	—
13	0	X	0	X	0	0	—	—	—	—	—	—	A NO
14	0	X	0	X	0	X	—	—	—	—	—	—	A NO, B NO
15	0	X	X	X	0	0	—	A NO	—	—	—	—	—
16	0	X	X	X	0	X	—	A NO, B NO	—	—	—	—	—
17	0	X	X	X	X	X	A NO, B NO	—	—	—	—	—	—

Series and Parallel Connections

Series Connection

Parallel Connection

The connections are not made at the factory. They are illustrated in the selection table as requirements, but must be made on the job.

Circuit Location

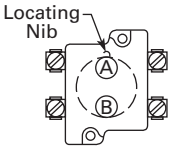

Letters "A" and "B" represent the locations which the two circuits of a contact block will occupy in relation to the locating nib of the operator.

Notes

① N = Button in free or normal position. D = Button depressed.

② Limited to 4 contact blocks. See Note on **Page V7-T1-266**.

1

Cam and Contact Block Selection for Three-Position Roto-Push, continued

Combination Number	Collar Position / Circuit Sequence ① N	D	N	D	N	D	Cam Code 7	Cam Code 8 ②	Cam Code 9	Cam Code 15	Cam Code 16	Cam Code 17	Cam Code 18
18	X	0	0	0	0	0	A NC B NC	—	—	—	—	—	—
19	X	0	0	0	X	X	—	A NC	—	—	—	—	—
20	X	0	0	0	X	0	—	A NC B NC	—	—	—	—	—
21	X	0	X	X	0	0	—	—	—	—	—	A NC B NC	—
22	X	0	X	X	X	X	A NC B NO	A NC B NO	—	—	A NC	B NC	A NC B NO
23	X	0	X	X	X	0	A NC	—	—	—	A NC B NC	—	—
24	X	0	X	0	X	0	—	—	—	A NC B NC	—	—	A NC B NC
25	X	0	X	0	X	X	—	—	—	A NC	—	—	A NC
26	X	X	0	0	0	0	B NC	—	A NC	—	—	—	—
27	X	X	0	0	0	X	A NO B NC	—	—	—	—	—	—
28	X	X	0	0	X	0	—	B NC	—	—	—	—	—
29	X	X	0	0	X	X	—	A NC B NO	A NC B NO	—	—	—	—
30	X	X	X	X	0	0	—	—	B NC	—	—	A NC	—
31	X	X	X	X	X	0	A NC B NC	A NO B NC	—	—	B NC	—	A NO B NC
32	X	X	X	0	X	0	—	—	—	B NC ②	—	—	B NC
33	X	X	X	0	X	X	—	—	—	A NO B NC	—	—	A NC B NC

Series and Parallel Connections

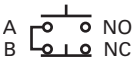

Series Connection

Parallel Connection

The connections are not made at the factory. They are illustrated in the selection table as requirements, but must be made on the job.

Circuit Location

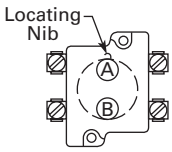

Letters "A" and "B" represent the locations which the two circuits of a contact block will occupy in relation to the locating nib of the operator.

Notes

① N = Button in free or normal position. D = Button depressed.

② Limited to 4 contact blocks. See Note on **Page V7-T1-266.**

Accessories

Padlocks not included with padlocking attachments. For operators with built-in padlock attachment, see **Page V7-T1-220**.

Accessories

	Description	Catalog Number
	Padlock Attachments	
10250TA2	**Padlocking Attachment for Flush Pushbutton Operators** Permits locking NC contacts in open position with 1/4 in padlock. Will not lock NO contact.	**10250TA2**
10250TA26	**Padlocking Attachment for Use with Extended Pushbutton** Permits locking NC contacts in open position with 1/4 in padlock.	**10250TA26**
10250TA36	**Padlocking Cover Guard** Cover locked over flush button makes it unaccessible or on extended button locks NC contacts open. Takes 1/4 in shank size padlock.	**10250TA36**
10250TA38	**Padlock Hasp or Flip-Up Guard** When used with a 1/4 in padlock, makes flush and long button and knob selector switch unaccessible, but not locked down. Without the padlock, it is a flip-up guard. Padlock hasp can be removed before assembly.	**10250TA38**
10250TA63	**Padlocking Attachment for Use with Flexible Weather Resistant Boot** Used on long button operators. Stainless steel. Use only for locking NC contacts open.	**10250TA63**
10250TA64	**Padlock Attachment** For use with illuminated pushbuttons and maintained push-pull operators having standard button or lens only. Use 1/4 in padlock. Locks in down position only.	**10250TA64**
10250TA11	**Padlocking Attachment for Non-Illuminated Knob Selector Switches** Provision for up to 5, 1/4 in padlocks.	**10250TA11**

1

Accessories, continued

	Description	Catalog Number
	Shrouds and Guards	
10250TA6	**Shroud for Mushroom Head Operator** Prevents accidental operation. (Not for push-pull operators.)	**10250TA6**
10250TA12	**Extended Retaining Nut** Replaces standard nut and provides guard for flush head pushbutton operators.	**10250TA12**
10250TA15	**Guard for Illuminated Pushbutton**	**10250TA15**
10250TA56_	**Shroud** For jumbo mushroom head operator.	
	Gray	**10250TA56**
	Yellow	**10250TA56Y**
10250ED1241	**Half Shroud**—Yellow For jumbo mushroom head operator.	**10250ED1241**
10250TA101 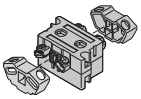	**Fingerproof Shroud**—10 per package Fits new style contact blocks and light units.	**10250TA101**
	Boots	
10250TA_	**Flexible Weather Resistant Boot** For use with button operators (extended buttons preferred). Temperature to –25°F (–32°C). (See **Page V7-T1-259** for 10250TA96 Tightening Tool.)	
	Black	**10250TA3**
	Red	**10250TA4** ①
	Green	**10250TA10**
10250TA25	**Transparent Boot** For regular illuminated pushbutton operators and PresTest— Temperature to –38°F (–39°C). ②	**10250TA25**
10250TA4_	**Boot for Flush Pushbutton**	
	Clear	**10250TA46**
	Black	**10250TA47**
	Red	**10250TA48**
	Green	**10250TA49**

Notes

① Should not be used on flush button for STOP function.

② Not suitable for single contact block depth cast enclosure. Cover is too thick.

Accessories, continued

	Description	Catalog Number
	Hardware and Kits	
10250TK3	**Thrust Washers**— To meet Ford Motor Co. mounting specifications.	**10250TK3**
10250TK5 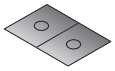	**Contact Block Tape Seal**— Seals plunger openings on last contact block. Order in multiples of 10 pieces.	**10250TK5**
56-9337	**Selector Switch Operator Gasket**— Seals out dust from getting in-between the cam and contact block plungers. Supplied as standard with all selector switches.	**56-9337**
10250TA3_	**Special Retaining Nut**— To accommodate thick panel:	
	Indicating lights	**10250TA30**
	PresTest, pushbuttons and selector switches	**10250TA31**
10250TA62	**Terminal Block**— Two terminals, each will accommodate two wire terminations.	**10250TA62**
10250TA8	**Spacer Ring**— Used when legend plate is not required.	**10250TA8**
10250TA79	**Stacking Screw**— Replaces transformer mounting screws on indicating light so terminal block 10250TA62 can be mounted to light to support and connect a series resistor. This screw also fits all contact blocks. Order in multiples of 10.	**10250TA79**
10250TA2_	**Base Mounting Spacers** ①—	
	Equivalent to contact block in depth (one block deep).	**10250TA22**
	Complete with screws, washers, etc. (two block deep).	**10250TA23**
10250TKG_	**Grounding Kits**— Kits consist of a ring connector and a #6 screw for mounting connector to rear of contact block mounting screw.	
	All components except standard indicating lights and PresTest indicating lights.	**10250TKG1**
	Standard indicating lights	**10250TKG2** ②
	PresTest indicating lights	**10250TKG3** ②
10250TA7_	**Contact Block Terminal Jumpers**— Available in multiples of 100 only.	
	Terminal to terminal—within block (short)	
	100 per pkg.	**10250TA70**
	1000 per pkg.	**10250TA70-2**
	Terminal to terminal—block to block (long)	
	100 per pkg.	**10250TA71**
	1000 per pkg.	**10250TA71-2**

Notes

① Component only. Not to be used for custom built (factory assembled) stations.
② Not suitable for single contact block depth cast enclosure. Cover is too thick.

1

Accessories, continued

	Description	Catalog Number
	Special Operators and Attachments	
10250TA5	**Wobble Stick** Complete with retaining nut—fits standard button.	**10250TA5**
10250TA14	**Lever Operator** For use with two vertically mounted flush pushbuttons.	**10250TA14**
10250TA_	**Maintained Contact Attachment Release Button Assembly** ① Mechanically interlocks with another pushbutton and contact block (not included). Provides mode indication. Minimum hole centers 1.62 in (41.1 mm), maximum 2.313 in (58.8 mm).	
	Black	**10250TA17**
	Red	**10250TA18**
	Green	**10250TA19**
	Yellow	**10250TA20**
	Same with Long Button—Black	**10250TA39**
10250TA1	**Maintained Contact Attachment** ① Mechanically interlocks two buttons and provides position indication for one. Use with two pushbutton operators and one or more contact blocks.	**10250TA1**
10250TA13	**Roto-Push Lever Operator**— Used to provide lever operation for Roto-Push operators.	**10250TA13**
	Special Light Modules	
10250TA79	**Master Test (Dual Input) Module**— Internal Form C relay suitable for either AC or DC applications. Total electrical isolation between monitored and test circuit. Fits all illuminated 10250T, E22, E30 and E34 devices.	
	48 Vdc	**10250TMT8**
10250TFL_	**Flasher Module**— Changes any AC illuminated device to a controlled flashing light. Fits 10250T, E30 and E34 devices.	
	24V	**10250TFL2**
	120V	**10250TFL1**
10250ED986-4	**Flashing Incandescent Lamp**— For use with 120V transformer type or 6V full voltage type indicating lights including PresTest and most E29 devices.	**10250ED986-4**

Note

① Not suitable for single contact block depth cast enclosure. Cover is too thick.

Accessories, continued

	Description	Catalog Number
	Hole Plugs	
10250TA7	**Plug**— For unused holes—steel, painted gray (stainless steel, use **E30KT5**, see **Page V7-T1-206**)	**10250TA7**
	Tools	
10250TA95	Octagonal 10250T (notched to fit over selector switch lever), E29 and E30	**10250TA95**
E22CW	E22, E30, E34 and octagonal 10250T (will not fit over selector switch levers)	**E22CW**
10250TA96	**Tool for Tightening Boots**— Used to install boot Catalog Numbers 10250TA3, A4, A10 and A25.	**10250TA96**
10250TA102	**10250T, E34 Allen Wrench**— Used for removal of jumbo mushroom head.	**10250TA102**
10250TA74	**Lamp Removal Tools**— For transformer type illuminated pushbuttons, push-pull and selector switches. Fits #12 lamp.	**10250TA74**
E30KV1	For full voltage and resistor type illuminated pushbuttons, push-pull and selector switches and E30.	**E30KV1**
E29KLT	Standard indicating lights. Fits #44, #755, #6S6 and #10S6.	**E29KLT**

1

Options

Legend Plates

Legend Plates with Standard Markings

The legend plates listed below are sized for all standard commercial enclosures and Eaton's cast enclosures. For vertical spacing less than 1.75 in, replace the **S** in the catalog number with **MS**, or the **M** with **P** (except push-pull). No change in price. The smaller size legend plates, "MS" or "P" size, have limited space for legend.

Square Legend Plate

1/2 Round Legend Plate

For Pushbutton Operators and Indicating Lights—Standard

Legend	Color of Field	Square ① Catalog Number	1/2 Round Catalog Number	Legend	Color of Field	Square ① Catalog Number	1/2 Round Catalog Number
Blank—see table on Page V7-T1-262.							
Letters on Legend Plates Below are 3/16 in High							
CLAMP	Black	**10250TS90**	**10250TM90**	OFF	Red	**10250TS24**	**10250TM24**
CLOSE		**10250TS73**	**10250TM11**	ON	Black	**10250TS25**	**10250TM25**
DOWN		**10250TS74**	**10250TM12**	OPEN		**10250TS26**	**10250TM26**
EMERG. STOP	Red	**10250TS13**	**10250TM13**	OUT		**10250TS27**	**10250TM27**
FAST	Black	**10250TS75**	**10250TM14**	POWER ON		**10250TS80**	**10250TM80**
FASTER		**10250TS87**	**10250TM87**	RAISE		**10250TS28**	**10250TM28**
FEEDER ON		**10250TS94**	**10250TM94**	READY		**10250TS86**	**10250TM86**
FEEDER OFF		**10250TS95**	**10250TM95**	RESET		**10250TS29**	**10250TM29**
FORWARD		**10250TS15**	**10250TM15**	REVERSE		**10250TS30**	**10250TM30**
HIGH		**10250TS16**	**10250TM16**	RUN		**10250TS31**	**10250TM31**
IN		**10250TS17**	**10250TM17**	SAFE		**10250TS85**	**10250TM85**
INCH		**10250TS18**	**10250TM18**	SLOW		**10250TS32**	**10250TM32**
JOG		**10250TS19**	**10250TM19**	SLOWER		**10250TS88**	**10250TM88**
JOG FOR.		**10250TS20**	**10250TM20**	START		**10250TS33**	**10250TM33**
JOG REV.		**10250TS21**	**10250TM21**	STOP	Red	**10250TS34**	**10250TM34**
LOW		**10250TS22**	**10250TM22**	TEST	Black	**10250TS83**	**10250TM83**
LOWER		**10250TS23**	**10250TM23**	TRANSFER		**10250TS93**	**10250TM93**
LUBE-FAIL		**10250TS92**	**10250TM92**	TRIP		**10250TS84**	**10250TM84**
MOTOR RUN		**10250TS81**	**10250TM81**	UNCLAMP		**10250TS91**	**10250TM91**
MOTOR STOP		**10250TS82**	**10250TM82**	UP		**10250TS35**	**10250TM35**

Blank Plastic Legend Plates—Square

Color Lettering	Field	Standard Catalog Number	Jumbo ② Catalog Number	Extra Large Catalog Number
Black	White or silver ③	**10250TSP76**	**10250TLP76**	**10250TEP76**
White	Red or black ③	**10250TSP77**	**10250TLP77**	**10250TEP77**

Notes

① Square legend plates have a satin aluminum field. Color is on lower portion.

② Cannot be used on cast enclosures except for top row. Suitable for most sheet metal enclosures.

③ If legend plate is to be engraved, specify field color required.

Square Legend Plate

1/2 Round Legend Plate

For Selector Switch and Roto-Push Operators—Standard Size

Legend	Color of Field	Square ① Catalog Number	1/2 Round Catalog Number
Blank—see table on Page V7-T1-262.			
2-Position—5/32 in High Lettering			
FOR. REV.	Black	**10250TS38**	**10250TM38**
HAND AUTO		**10250TS39**	**10250TM39**
HIGH LOW		**10250TS40**	**10250TM40**
JOG RUN		**10250TS41**	**10250TM41**
MAN. AUTO		**10250TS67**	**10250TM67**
OFF ON		**10250TS42**	**10250TM42**
OPEN CLOSE		**10250TS43**	**10250TM43**
RUN JOG		**10250TS44**	**10250TM44**
SAFE RUN		**10250TS45**	**10250TM45**
START JOG		**10250TS46**	**10250TM46**
START STOP		**10250TS47**	**10250TM47**
UP DOWN		**10250TS48**	**10250TM48**

Legend	Color of Field	Square ① Catalog Number	1/2 Round Catalog Number
3-Position—1/8 in High Lettering			
AUTO OFF HAND	Black	**10250TS49**	**10250TM49**
FOR. OFF REV.		**10250TS50**	**10250TM50**
FOR. SAFE REV.		**10250TS69**	**10250TM69**
HAND OFF AUTO		**10250TS51**	**10250TM51**
MAN. OFF AUTO		**10250TS68**	**10250TM68**
OPEN OFF CLOSE		**10250TS53**	**10250TM53**
RUN SAFE JOG		**10250TS70**	**10250TM70**
UP OFF DOWN		**10250TS54**	**10250TM54**
ON STOP SAFE	Red	**10250TS71**	**10250TM71**

70 mm Round—Plastic Legend Plate

45 mm and 70 mm Plastic—Round

Lettering	Color Field	Catalog Number
45 mm		
Blank	Yellow or red ②	**10250TRP78**
70 mm		
Blank	Yellow or red ②	**10250TRP76**
Red EMERG. STOP	Yellow	**10250TRP79**

For Push-Pull Units ③

Legend	Color of Field	Square ① Catalog Number	1/2 Round Catalog Number
Standard Size—Letters on Legend Plates Below are 3/32 in High			
PULL START/PUSH STOP	Green/red	**10250TPP2**	**10250TR2**
PUSH ON/PULL OFF	Black	**10250TPP5**	**10250TR5**
PULL OPEN/PUSH CLOSE	Black	**10250TPP8**	**10250TR8**
PULL UP/PUSH DOWN	Black	**10250TPP11**	**10250TR11**
Jumbo Size—Letters on Legend Plates Below are 1/8 in High			
PULL START/PUSH STOP	Green/red	**10250TPP3**	**10250TR3**
PULL ON/PUSH OFF	Black	**10250TPP6**	**10250TR6**
PULL OPEN/PUSH CLOSE	Black	**10250TPP9**	**10250TR9**
PULL UP/PUSH DOWN	Black	**10250TPP12**	**10250TR12**

Notes

① Square legend plates have a satin aluminum field. Color is on lower portion.
② If legend plate is to be engraved, specify field color required.
③ All push-pull legend plates include the symbols ≠ Ø in the center of the plate.

1

Legend Plates with Non-Standard Markings

When Ordering Specify

- Catalog number of blank plate phase plus Suffix "STAMP."
- Insert the following into Order Notes: legend, letter size and locations (letters A–W)—combine letters for definitive locations as shown.

Ordering Example:

Catalog No.:
10250TS36STAMP
Letter Size: 3/32 in (2.4 mm)
Pos. A—POWER HOUSE
Pos. B—START PUMP 1

Legend Characters Available

A B C D E F G H I J K L M N O P Q R S T U V W X Y Z / - . , 1 2 3 4 5 6 7 8 9 0

Legend characters on black and red plates are white—on satin aluminum plates, characters are black.

Blackening Kit

Solution blackens aluminum exposed by engraving process. Must be applied immediately after engraving. 0.3 oz. bottle—sufficient for approximately 1100 legend plates.

Catalog Number: **10250TBK**

Legend Positions

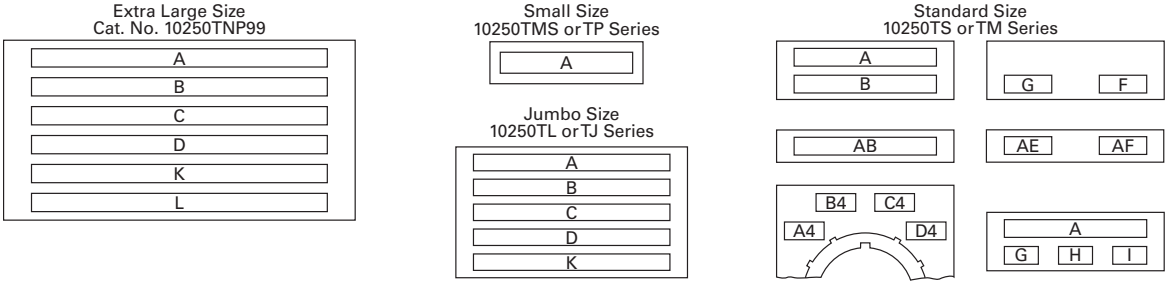

Blank and Custom Engraved Legend Plates

Style	Color	Small Catalog Number	Standard Catalog Number	Jumbo ② Catalog Number	Extra Large ③ Catalog Number	Four-Position Selector Switch Custom ④ Catalog Number	Four-Position Selector Switch Standard Catalog Number	Push-Pull with Symbols ① Standard Catalog Number	Push-Pull with Symbols ① Jumbo ② Catalog Number
Square ⑤	Black	**10250TMS36**	**10250TS36**	**10250TL36**	—	**10250TS76**	**10250TS72**	**10250TPP17**	**10250TPP18**
	Red	**10250TMS37**	**10250TS37**	**10250TL37**	—	—	—	—	—
	Green/red	—	—	—	—	—	—	**10250TPP20**	**10250TPP21**
	Satin alum.	—	—	—	**10250TNP99**	—	—	—	—
1/2 Round	Black	**10250TP36**	**10250TM36**	**10250TJ36**	—	—	**10250TM72**	**10250TR17**	**10250TR18**
	Red	**10250TP37**	**10250TM37**	**10250TJ37**	—	—	—	—	—
	Green/red	—	—	—	—	—	—	**10250TR20**	**10250TR21**
	Satin alum.	—	**10250TM89**	**10250TJ89**	—	—	—	—	—

Maximum Characters per Legend Plate and Approximate Dimensions

Top (Aluminum and Plastic)	Approximate Dimensions in Inches (mm) Width	Height	Style	Character Size 3/32 in High Number of Lines	Number of Characters	1/8 in High Number of Lines	Number of Characters	3/16 in High Number of Lines	Number of Characters
Small ⑥	1.59 (40.4)	1.59 (40.4)	Square	1	17	—	—	—	—
			1/2 Round	1	15	1	12	1	9
Standard and custom	1.75 (44.5)	1.75 (44.5)	Square	2	18	2	13	1	9
			1/2 Round	2	15	2	12	1	9
Jumbo ⑦	2.19 (55.6)	2.19 (55.6)	Square	5	23	3	18	2	12
			1/2 Round	5	19	4	15	2	11
Extra large ③	2.44 (62.0)	2.44 (62.0)	Square	6	25	3	18	3	12

Notes

① All push-pull legend plates include the symbols ≠ Ø in the center of the plate.
② Cannot be used on cast enclosures except for top row. Suitable for most sheet metal enclosures.
③ When used to meet Ford Motor Co. specifications, specify engraved legend. Cannot be used on standard cast or sheet metal enclosures.
④ Slightly larger than standard size for legends requiring more space—fits cast enclosures.
⑤ Square legend plates have a satin aluminum field. Color is on lower portion.
⑥ Recommended only when mounting on minimum centers (less than 1-3/4 in [44.5 mm] vertical centers).
⑦ Can be used on top row only of any enclosure.

Enclosures

Die Cast, Polyester and Stainless Steel Enclosures

Enclosures (Case and Cover)—Surface Mounting ①

	Number of Elements	One Contact Block Depth Catalog Number	Two Contact Block Depth Catalog Number
Die Cast Enclosure	**Die Cast Enclosure—In-Line ②③④ NEMA 4, 4X, 12, 13**		
	1	**10250TN1**	**10250TN11**
	2	**10250TN2**	**10250TN12**
	3	**10250TN3**	**10250TN13**
	4	—	**10250TN14**
Polyester Enclosure	**Polyester ④—In-Line NEMA 3, 4X, 12**		
	1	—	**E34N51**
	2	—	**E34N52**
	3	—	**E34N53**
	4	—	**E34N54**
Stainless Steel Enclosure	**Stainless Steel ④⑤—In-Line NEMA 4, 4X, 12**		
	1	—	**10250TN33**
	2	—	**10250TN34**
	3	—	**10250TN35**
	4	—	**10250TN36**

Dimensions, see **Page V7-T1-276**.

Mounting Instructions

Two-position joystick must be used with two contact block deep enclosures (maximum number of contact blocks = 1). Four-position joysticks cannot be used within these enclosures.

One and Two Contact Block Depth Enclosures

One Contact Block Depth Enclosure

Two Contact Block Depth Enclosure

Enclosure Layouts

Top – For Vertical Mounting

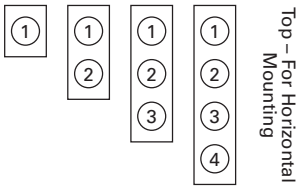

Notes

① For spacing increments, see **Page V7-T1-264.**
② All die cast enclosures can be converted to base mounting of contact blocks, with spacers 10250TA22 or 10250TA23. See listing on **Page V7-T1-257.**
③ When used with E30 pushbuttons, only the one element enclosure can be used.
④ When used with resistor light units, only the 2 contact block depth enclosure can be used.
⑤ 14 gauge, type 304.

1

Die Cast and Stainless Steel—Flush Mount, Covers Only

Flush Mounting Covers

Covers Only—Flush Mounting

Number of Elements	Catalog Number	Catalog Number
Flush Die Cast Covers		
	In-Line Deep Cover	**In-Line Flat Cover**
1	**10250TF11**	**10250TF1**
2	**10250TF12**	**10250TF2**
3	**10250TF13**	**10250TF3**
4	**10250TF14**	**10250TF4**
In-Line Stainless Steel Flush Plates ①		
	With Pullbox	**Without Pullbox**
1	**10250TS10**	**10250TS1**
2	**10250TS11**	**10250TS2**
3	**10250TS12**	**10250TS3**
4	**10250TS14**	**10250TS4**
Dimensions, see **Page V7-T1-277**.		

Spacing Increments

Approximate Dimensions in Inches (mm)

Type	F	G	H
Die cast	2.44 (62.0)	2.5 (63.5)	1.88 (47.8)
Polyester	1.88 (47.8)	Min. 2.13 (54.1)	2.25 (57.2)
Stainless steel	1.69 (42.9)	Min. 1.73 (43.9)	2.25 (57.2)

Spacing Increments for Enclosures

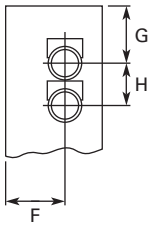

Enclosure Layouts

Top – For Vertical Mounting

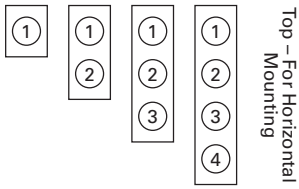

Note

① Not oiltight. NEMA 1 applications only.

Contact Blocks

Standard Contact Blocks

- UL A600/P600 rated
- Color-coded plungers—red/green for NC/NO circuits
- Silver contact tips with "reliability nibs"
- Gray (opaque) or amber (translucent) housings
- Pressure plate or spade terminals
- Fingerproof shrouds (for pressure terminals only)

Logic Level Contact Blocks

- UL A600/P600 rated
- Color-coded plungers
- Inert palladium knife-blade contacts
- Gray (opaque) housings
- Pressure plate or spade terminals

Special Function Contact Blocks

- UL A600/P600 rated
- Color-coded plungers
- Silver contact tips with "reliability nibs"
- Gray (opaque) housings
- Pressure plate terminals only

Special Purpose Contact Block

- Maximum 300V rated
- Black plungers
- Silver contact tips with "reliability nibs"
- Black (opaque) housings
- Pressure plate terminals only
- Fingerproof shrouds not available

Reliability Nibs

Reliability nibs are the hallmark of Eaton's contact blocks. A pointed silver nib on the contact tip ensures reliable switching from logic level (5V) up to 600V applications. Therefore standard contact blocks can be used for most logic level applications where the contacts are not exposed to any harsh environmental conditions.

Palladium Contacts

Palladium, which is more inert than gold, is well suited for voltages and currents approaching zero and is recommended for applications where environmental conditions are a factor.

Maximum Contact Block Mounting per Operator Type

Operator	Max. Stack
Pushbuttons	6
Push-pull operators	2
Roto-push operators	4
Two- or three-position selector switches	6
Four-position selector switches	4
Joysticks	4

1

10250T1

Contact Blocks

Symbol	Circuit	Description ①	Standard Pressure Terminal Catalog Number	Standard Spade Terminal ② Catalog Number	Logic Level Pressure Terminal Catalog Number	Logic Level Spade Terminal ② Catalog Number
Blank No Plunger	1NC	Stack up to six blocks (six circuits) unless otherwise noted.	**10250T51**	**10250T59**	**10250T51E**	**10250T59E**
Blank No Plunger	1NO	Stack up to six blocks six circuits) unless otherwise noted.	**10250T53**	**10250T60**	**10250T53E**	**10250T60E**
	NO-NC	Stack up to six blocks (12 circuits) unless otherwise noted.	**10250T1**	**10250T40**	**10250T1E**	**10250T40E**
	2NC	Stack up to six blocks (12 circuits) unless otherwise noted.	**10250T3**	**10250T42**	**10250T3E**	**10250T42E**
	2NO	Stack up to six blocks (12 circuits) unless otherwise noted.	**10250T2**	**10250T41**	**10250T2E**	**10250T41E**
Special Function Blocks ③						
Blank No Plunger	LONC	Late opening NC. Stack up to six blocks (six circuits) unless otherwise noted.	**10250T71 ③**	—	**10250T71E ③**	—
	ECNO-NC	Early closing NO and standard NC. Stack up to six blocks unless otherwise noted.	**10250T47 ③④**	—	**10250T47E ③**	—
	ECNO-NO	Early closing NO and standard NO. Stack up to four blocks unless otherwise noted.	**10250T57 ③④**	—	**10250T57E ③**	—
	2LONC	Two late opening NC contacts. Stack up to six blocks unless otherwise noted.	**10250T45 ③**	—	**10250T45E ③**	—
	LONC-ECNO	Overlapping contacts. Stack up to four blocks unless otherwise noted.	**10250T55 ③④**	—	**10250T55E ③**	—
Special Purpose Blocks ⑤						
	2NO-2NC	Four circuits in single block depth. Rated 300V max. Stack up to four blocks unless otherwise noted.	**10250T44 ⑤**	—		

Notes

① All 10250T contact blocks shown are suitable for use on standard 10250T and E34 operators. These contact blocks are not suitable for Class I Division 2 type 10250T or E34 devices.

② Contact blocks with spade terminals are limited to a maximum of one contact block per operator and minimum spacing between devices is 2.5 in (63.5 mm). Not suitable for use in 10250T or E34 enclosures. Also available in amber housing. Not available with fingerproof shrouds.

③ Special function contact blocks are not suitable for use with roto-push operators, three-position push-pull operators, or four-position selector switches.

④ ECNO contact blocks are not suitable for use with two-position joysticks or when operators are used with padlock attachments.

⑤ Special purpose 10250T44 contact blocks are not suitable on selector switches or roto-push operators. Okay to use with three-position push-pull operators only on low voltage (30V or less) circuits. Fingerproof shrouds not available.

10250T1CP

Contact Blocks with Fingerproof Shrouds

Symbol	Circuit	Description ①	Standard Pressure Terminal ② Catalog Number	Logic Level Pressure Terminal ② Catalog Number
Blank No Plunger	1NC	Stack up to six blocks (six circuits) unless otherwise noted.	**10250T51P**	**10250T51EP**
Blank No Plunger	1NO	Stack up to six blocks (six circuits) unless otherwise noted.	**10250T53P**	**10250T53EP**
	NO-NC	Stack up to six blocks (12 circuits) unless otherwise noted.	**10250T1P**	**10250T1EP**
	2NC	Stack up to six blocks (12 circuits) unless otherwise noted.	**10250T3P**	**10250T3EP**
	2NO	Stack up to six blocks (12 circuits) unless otherwise noted.	**10250T2P**	**10250T2EP**
Special Function Blocks ③				
Blank No Plunger	LONC	Late opening NC. Stack up to six blocks (six circuits) unless otherwise noted.	**10250T71P** ④	**10250T71EP** ④
	ECNO-NC	Early closing NO and standard NC. Stack up to six blocks unless otherwise noted.	**10250T47P** ③④	**10250T47EP** ④
	ECNO-NO	Early closing NO and standard NO. Stack up to four blocks unless otherwise noted.	**10250T57P** ③④	**10250T57EP** ④
	2LONC	Two late opening NC contacts. Stack up to six blocks unless otherwise noted.	**10250T45P** ④	**10250T45EP** ④
	LONC-ECNO	Overlapping contacts. Stack up to four blocks unless otherwise noted.	**10250T55P** ③④	**10250T55EP** ④

Notes

① All 10250T contact blocks shown are suitable for use on standard 10250T and E34 operators. These contact blocks are not suitable for Class I Division 2 type 10250T or E34 devices.

② To order contact blocks with translucent amber housing, change suffix P to **CP** in catalog number e.g. 10250T51**CP**.

③ ECNO contact blocks are not suitable for use with two-position joysticks or when operators are used with padlock attachments.

④ Special function contact blocks are not suitable for use with roto-push operators, three-position push-pull operators, or four-position selector switches.

1

10250T1C

Amber Contact Blocks

Symbol	Circuit	Description ①	Standard Pressure Terminal ② Catalog Number	Standard Spade Terminal ③ Catalog Number	Logic Level Pressure Terminal ② Catalog Number	Logic Level Spade Terminal ③ Catalog Number
Blank No Plunger	1NC	Stack up to six blocks (six circuits) unless otherwise noted.	**10250T51C**	**10250T59C**	**10250T51EC**	**10250T59EC**
Blank No Plunger	1NO	Stack up to six blocks (six circuits) unless otherwise noted.	**10250T53C**	**10250T60C**	**10250T53EC**	**10250T60EC**
	NO-NC	Stack up to six blocks (12 circuits) unless otherwise noted.	**10250T1C**	**10250T40C**	**10250T1EC**	**10250T40EC**
	2NC	Stack up to six blocks (12 circuits) unless otherwise noted.	**10250T3C**	**10250T42C**	**10250T3EC**	**10250T42EC**
	2NO	Stack up to six blocks (12 circuits) unless otherwise noted.	**10250T2C**	**10250T41C**	**10250T2EC**	**10250T41EC**
Special Function Blocks ③						
Blank No Plunger	LONC	Late opening NC. Stack up to six blocks (six circuits) unless otherwise noted.	**10250T71C ④**	—	**10250T71EC ④**	—
	ECNO-NC	Early closing NO and standard NC. Stack up to six blocks unless otherwise noted.	**10250T47C ④⑤**	—	**10250T47EC ④**	—
	ECNO-NO	Early closing NO and standard NO. Stack up to four blocks unless otherwise noted.	**10250T57C ④⑤**	—	**10250T57EC ④**	—
	2LONC	Two late opening NC contacts. Stack up to six blocks unless otherwise noted.	**10250T45C ④**	—	**10250T45EC ④**	—
	LONC-ECNO	Overlapping contacts. Stack up to four blocks unless otherwise noted.	**10250T55C ④⑤**	—	**10250T55EC ④**	—

Notes

① All 10250T contact blocks shown are suitable for use on standard 10250T and E34 operators. These contact blocks are not suitable for Class I Division 2 type 10250T or E34 devices.

② To order amber contact blocks with fingerproof shrouds, change suffix to **CP** in the catalog number e.g. 10250T51**CP**. Not available with spade terminals.

③ Contact blocks with spade terminals are limited to a maximum of one contact block per operator and minimum spacing between devices is 2.5 in (63.5 mm). Not suitable for use in 10250T or E34 enclosures. Also available in amber housing. Not available with fingerproof shrouds.

④ Special function contact blocks are not suitable for use with roto-push operators, three-position push-pull operators, or four-position selector switches.

⑤ ECNO contact blocks are not suitable for use with two-position joysticks or when operators are used with padlock attachments.

Replacement Parts

Replacement Lamps—For 10250T Illuminated Operators

Mfg. Lamp Type	Voltage	Base Style	Application	Part Number
120MB	120V	T 3-1/4 bayonet	10250T resistor indicating light	**28-3044**
#267	6.3V	T 3-1/4 bayonet	10250T flasher	**10250ED986-4**
#755	6.3V	T 3-1/4 bayonet	10250T transformer, PresTest and full voltage	**28-2202**
#756	12V	T 3-1/4 bayonet	10250T full voltage	**28-5184**
#757	24V	T 3-1/4 bayonet	10250T full voltage	**28-5185**
#1828	32V	T 3-1/4 bayonet	10250T full voltage	**28-5186**
#1835	55V	T 3-1/4 bayonet	10250T resistor	**28-5187**
NE48	120V	T 4-1/2 bayonet	10250T neon	**28-494**
NE51H-R22	120V	T 3-1/4 bayonet	10250T neon	**28-3754**
NE51H-R68	240V	T 3-1/4 bayonet	10250T neon	**28-3755**

Standard LED Lamp

Replacement LED Lamps—For 10250T, E34 and E22 Units

Voltage	Color	Continuous AC/DC Catalog Number	Flashing AC Catalog Number	Flashing DC Catalog Number
6–12V	Red	**E22LED612RN**	**E22LED006RAF**	**E22LED006RDF**
	Orange	**E22LED612ON**	**E22LED006OAF**	**E22LED006ODF**
	Yellow	**E22LED612YN**	**E22LED006YAF**	**E22LED006YDF**
	Green	**E22LED612GN**	**E22LED006GAF**	**E22LED006GDF**
	Blue	**E22LED612BN**	**E22LED006BAF**	**E22LED006BDF**
	White	**E22LED612WN**	**E22LED006WAF**	**E22LED006WDF**
24V	Red	**E22LED024RN**	**E22LED024RAF**	**E22LED024RDF**
	Orange	**E22LED024ON**	**E22LED024OAF**	**E22LED024ODF**
	Yellow	**E22LED024YN**	**E22LED024YAF**	**E22LED024YDF**
	Green	**E22LED024GN**	**E22LED024GAF**	**E22LED024GDF**
	Blue	**E22LED024BN**	**E22LED024BAF**	**E22LED024BDF**
	White	**E22LED024WN**	**E22LED024WAF**	**E22LED024WDF**
48V	Red	**E22LED048RN**	**E22LED048RAF**	**E22LED048RDF**
	Orange	**E22LED048ON**	**E22LED048OAF**	**E22LED048ODF**
	Yellow	**E22LED048YN**	**E22LED048YAF**	**E22LED048YDF**
	Green	**E22LED048GN**	**E22LED048GAF**	**E22LED048GDF**
	Blue	**E22LED048BN**	**E22LED048BAF**	**E22LED048BDF**
	White	**E22LED048WN**	**E22LED048WAF**	**E22LED048WDF**
60V	Red	**E22LED060RN**	**E22LED060RAF**	**E22LED060RDF**
	Orange	**E22LED060ON**	**E22LED060OAF**	**E22LED060ODF**
	Yellow	**E22LED060YN**	**E22LED060YAF**	**E22LED060YDF**
	Green	**E22LED060GN**	**E22LED060GAF**	**E22LED060GDF**
	Blue	**E22LED060BN**	**E22LED060BAF**	**E22LED060BDF**
	White	**E22LED060WN**	**E22LED060WAF**	**E22LED060WDF**
120V	Red	**E22LED120RN**	**E22LED120RAF**	**E22LED120RDF**
	Orange	**E22LED120ON**	**E22LED120OAF**	**E22LED120ODF**
	Yellow	**E22LED120YN**	**E22LED120YAF**	**E22LED120YDF**
	Green	**E22LED120GN**	**E22LED120GAF**	**E22LED120GDF**
	Blue	**E22LED120BN**	**E22LED120BAF**	**E22LED120BDF**
	White	**E22LED120WN**	**E22LED120WAF**	**E22LED120WDF**

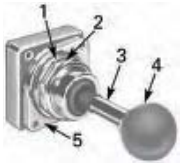

Two-Position Joystick Operator

Flush Head Pushbutton Operator

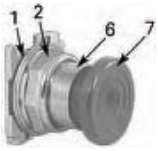

Mushroom Head Pushbutton Operator

Mushroom Head Operator with Padlock Attachment

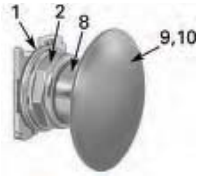

Jumbo Mushroom Head Operator

Knob-Operated Selector Switch Operator

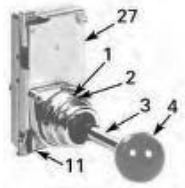

Four-Position Joystick Operator (without Latch)

Illuminated Pushbutton Operator

Full Voltage, Resistor and Transformer Type Illuminated Selector Switch

Transformer Type Indicating Light

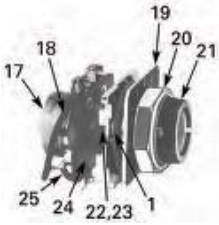

Potentiometers

10250T Style Operator Replacement Parts

Item No.	Description	No. Req.	Part Number
1	Gasket	1	**16-1548**
2	Mounting nut	1	**15-1530**
3	Handle	1	**24-5045**
4	Knob	1	**53-3157**
	Knob (not shown) for joystick operator with latch	1	**53-3159**
5	Common gate (supplied with operator)	2	**16-3400**
6	Set screw (#6-32 x 0.250 in long hollow hex)	2	**11-2014**
7	Mushroom head button (includes [2] Item 6)	1	**As Req. Below**
	Black	—	**53-1317**
	Red	—	**53-1317-2**
	Yellow	—	**53-1317-3**
	Green	—	**53-1317-4**
	Blue	—	**53-1317-22**
8	Set screw (#10-32 x 0.250 in long hollow hex)	2	**11-544**
9	Jumbo mushroom head button (aluminum—includes [2] Item 8)	1	**As Req. Below**
	Red	—	**53-1317-9**
	Black	—	**53-1317-10**
	Yellow	—	**53-1317-11**
	Green	—	**53-1317-12**
10	Jumbo mushroom head button (aluminum—red EMERG. STOP) does not include Item 8	1	**53-1349-18**
11	Position gate:		
	Two-position	1	**54-7278**
	Three-position	1	**54-7173**
	Four-position	1	**54-12278**
	Eight-position	1	**54-12279**
12	Mounting screw (#6-32 x 0.710 in long)	2	**10250TA79**
	Washer	2	**16-2038**
13	Terminal screw and lug (captive)	Req.	**80-5502KIT**

Item No.	Description	No. Req.	Part Number
14	Gasket (supplied with basic unit)	1	**32-803**
15	Round head screw (#4-40 x 0.344 in long) (supplied with basic unit)	2	**11-4553**
16	Mounting screw	2	**11-1632**
17	Simple potentiometer (does not include items 18, 28 or 29)	1	**As Req. Below**
	1,000 ohms	—	**41-782-2**
	2,500 ohms	—	**41-782-3**
	5,000 ohms	—	**41-782-10**
	10,000 ohms	—	**41-782-4**
	25,000 ohms	—	**41-782-5**
	50,000 ohms	—	**41-782-6**
18	Connector (includes screw and lug)	2	**25-1851**
19	Indicating plate	1	**As Req. Above**
	Standard size (without legend)	—	**30-4460**
	Large size (specify legend)	—	**10250TR30**
20	Retaining nut	1	**15-1547**
21	Knob	1	**53-1314**
	Socket set screw (#6-32 x 0.250 in long)	2	**11-2014**
22	Coupling	1	**29-3749-2**
23	Set screw (#6-32 x 0.188 in long)	1	**11-1199**
24	Spacer	2	**56-1066-18**
25	Connector (includes screw and lug)	1	**25-1851-2**
26	Mounting nut	1	**15-1938**
27	Four-position joystick operating mechanism (complete)	1	**24-6565**
28	Four-position joystick operating mechanism (not shown) (with latch) complete	1	**24-6565-2**
29	Spring loaded latch	1	**52-1214-2**
30	Hand operated latch	1	**52-913-3**

Technical Data and Specifications

Mechanical Ratings

Description	Specification
Frequency of Operation	
All pushbuttons	6000 operations/hr.
Key and lever selection switches	3000 operations/hr.
Auto-latch devices	1200 operations/hr.
Life	
Pushbuttons	10 x 10^6 operations
Contact blocks	10 x 10^6 operations
PresTest units	10 x 10^6 operations
Lever and key selector switches	0.25 x 10^6 operations
Twist to release pushbuttons	0.3 x 10^6 operations
Shock Resistance	
Duration	20 ms ≥5g

General Specifications

Description	Specification
Climate Conditions	
Operating temperature	1° to 150°F (–17° to 66°C)
Storage temperature	–40° to 176°F (–40° to 80°C)
Altitude	6,562 ft (2,000m)
Humidity	Max. 95% RH at 60°C
Terminals	
Marking	NC-NO on the contact block to meet the NEMA requirements. Dual marking system 1–2 for normally closed, 3–4 for normally open to meet BS5472 (Cenelec EN50 005).
Clamps	Terminals are saddle clamp type for 1 x 22 AWG (0.34 mm^2) to 2 x 14 AWG (2.5 mm^2) conductors
Torque	7 lb-in (0.8 Nm)
Degree of protection against direct electrical contact	IP2X with fingerproof shroud
Light Units	
Transformers	Will withstand short-circuit for 1 hour per IEC 60997-5-1
Bulbs—average life:	
Transformer type	20,000 hrs.
Resistor/direct voltage type	2500 hrs. minimum at rated voltage
LED	60,000 to 100,000 hrs.

Electrical Ratings

Description	Specification
Insulation	U_i = 660 Vac or Vdc
Thermal	I_{th} = 10A
Short Circuit Coordination to IEC/EN 60947-5-1	
Rated conditional short circuit current	1 kA
Fuse type	GE power controls TIA 10, red spot type gG, 10A, 660 Vac, 460 Vdc, BS88-2, IEC 60269-2-1
UL rating	A600, P600
AC load life duty cycle 1200 operations/hour	
10A	110V pf 0.4—1 x 10^6 operations
5A	250V pf 0.4—1 x 10^6 operations
2A	600V pf 0.4—1 x 10^6 operations
Switching capacity	
AC 15 rated make/break (11 x I_e at 1.1 x U_e)	
6A	120V pf 0.3
4A	240V pf 0.3
2A	660V pf 0.3
DC13 rated make/break (1.1 x I_e at 1.1 x U_e)	
1.0A	125V L/R ≥0.95 at 300 ms
0.55A	250V L/R ≥0.95 at 300 ms
0.1A	660V L/R ≥0.95 at 300 ms
10A	110V pure resistive
Maximum ratings for logic level and hostile atmosphere application	
Maximum amperes	0.5A
Maximum volts	120 Vac/Vdc

Electrical Ratings—Contact Block

	50 Vac or 60 Hz				Vdc		
Description	**120**	**240**	**480**	**600**	**24/28**	**125**	**250**
Meet or Exceed NEMA Rating Designations A600, A300 and B300 for AC and P600 for DC							
Make and emerg. interrupting capacity (amp)	60	30	15	12	5.7	1.1	0.55
Normal load break (amp)	6	3	1.5	1.2	5.7	1.1	0.55
Thermal current (amp)	10	10	10	10	5.0	5.0	5.0
Voltamperes:							
Make and emerg. interrupting capacity	7200	7200	7200	7200	138	138	138
Normal load break	720	720	720	720	138	138	138

Mounting Options

Panel Thickness

- Minimum: 0.06 in (1.6 mm)
- Maximum: 0.25 in (8 mm) including legend plate
- Maximum can be increased to 0.375 in (15.9 mm) using optional retaining nut
  - Indicating light: 10250TA30
  - Pushbutton/selector switch: 10250TA31

Mounting Matrix

Legend Plate	Dimensions in Inches (mm) A	B	C	D
Small	1.63 (41.3)	2.25 (57.2)	2.25 (57.2)	1.63 (41.3)
Medium	1.75 (44.5)	2.25 (57.2)	2.25 (57.2)	1.75 (44.5)
Large	2.25 (57.2)	2.25 (57.2)	2.25 (57.2)	2.25 (57.2)

Mounting Options in Inches (mm)

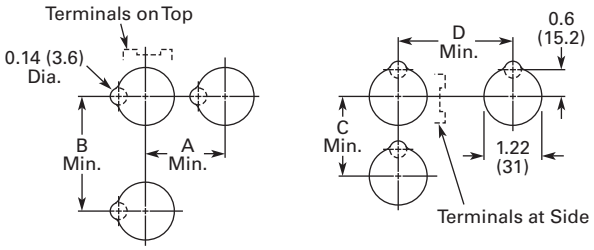

Horizontal Mounting **Vertical Mounting**

Horizontal mounting means terminals are located top and bottom of contact block.
Vertical mounting means terminals are left and right of contact block.
This allows close spacing of adjacent operators with easy access to terminals.

Locating nib hole or notch is 0.14 in (3.6 mm) #29 drill.

Drilling Dimensions in Inches (mm)

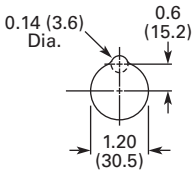

1

Dimensions

Approximate Dimensions in Inches (mm)

Mechanically Interlocked Pushbutton Operators

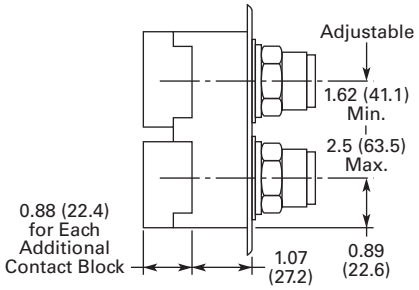

Lockout Pushbutton Operator Padlockable in the Down Position

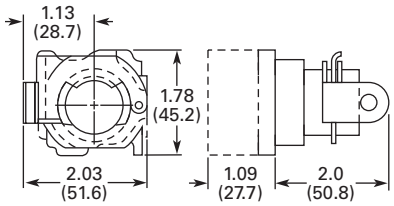

Lockout Pushbutton Operator Padlockable in the Up Position—Mushroom Head

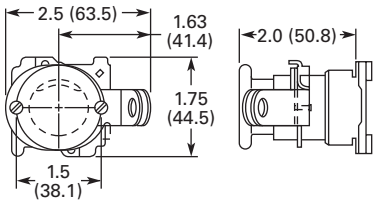

Lockout Pushbutton Operator Padlockable in the Up Position—Jumbo Mushroom Head

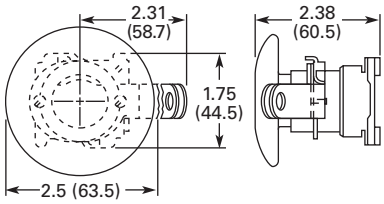

Potentiometer

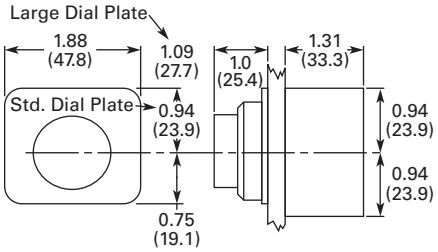

Potentiometer	A	B	C
2 watt single	1.31 (33.3)	0.94 (23.9)	0.94 (23.9)
25 watt—up to 25 mohms	2.38 (60.5)	1.19 (30.2)	0.81 (20.6)
50 mohms	2.56 (65.0)	1.69 (42.9)	1.25 (31.8)

Two-Position Joystick Operator

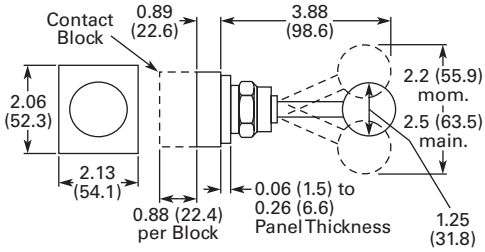

Four-Position Joystick Operator

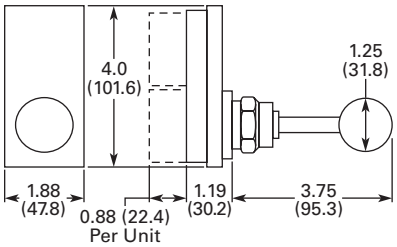

Approximate Dimensions in Inches (mm)

Key Operated Pushbutton Operator

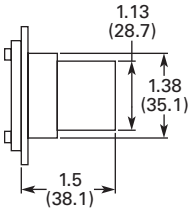

Operator and Cam

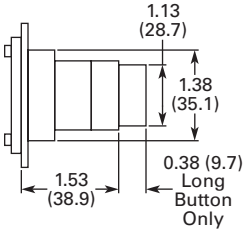

Latch-In, Twist-to-Release Operator Only with Button

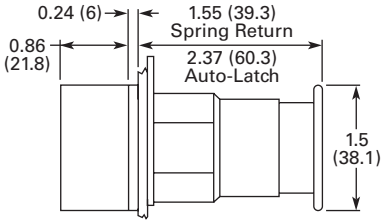

Special Rotor Latch

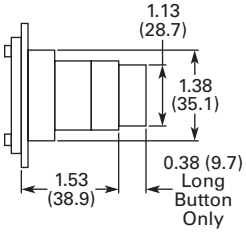

1

Approximate Dimensions in Inches (mm)

Surface Mounting

Die Cast, Polyester and Stainless Steel Enclosures

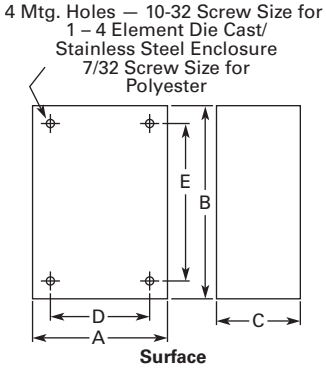

Number of Elements	Element Arrangement	Wide A	High B	Deep C	Mounting D	E	Conduit Entrance
Die Cast							
1	In-line	3.88 (98.6)	4.00 (101.6)	3.00 (76.3) ①	2.69 (68.3)	3.25 (82.6)	3/4
2		3.88 (98.6)	5.88 (149.4)	3.00 (76.3) ①	2.69 (68.3)	5.13 (130.3)	
3		3.88 (98.6)	7.75 (196.9)	3.00 (76.3) ①	2.69 (68.3)	7.00 (177.8)	1
4		3.88 (98.6)	9.63 (244.6)	3.00 (76.3) ①	2.69 (68.3)	8.88 (225.6)	
Polyester							
1	In-line	3.81 (96.8)	6.63 (168.4)	3.38 (85.9)	2.94 (74.7)	4.88 (124.0)	②
2		3.81 (96.8)	6.63 (168.4)	3.38 (85.9)	2.94 (74.7)	4.88 (124.0)	
3		3.81 (96.8)	8.88 (225.6)	3.38 (85.9)	2.94 (74.7)	7.13 (181.1)	
4		3.81 (96.8)	11.13 (282.7)	3.38 (85.9)	2.94 (74.7)	9.38 (238.3)	
Stainless Steel							
1	In-line	3.00 (76.2)	3.50 (88.9)	3.00 (76.2)	1.50 (38.1)	4.25 (108.0)	②
2		3.50 (88.9)	6.75 (171.5)	3.00 (76.2)	1.50 (38.1)	7.50 (190.5)	
3		3.50 (88.9)	9.00 (228.6)	3.00 (76.2)	1.50 (38.1)	9.00 (228.6)	
4		3.50 (88.9)	11.25 (285.8)	3.00 (76.2)	1.50 (38.1)	12.00 (304.8)	

Notes

① Depth given is for two contact block deep stations. One contact block deep stations subtract 3/4 in (19.1 mm).

② No conduit entrance holes provided. Drill as required.

Approximate Dimensions in Inches (mm)

Flush Mounting

Die Cast and Stainless Steel Covers Only

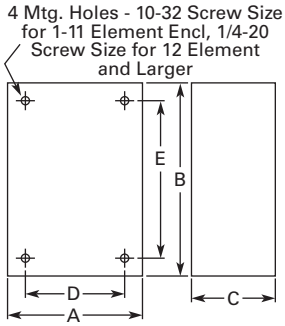

Surface or Pendant

Number of Elements	Wide A	High B	Deep C	Mounting D	E
Die Cast					
1	3.88 (98.6)	4.00 (101.6)	0.25 (6.4) ①	3.50 (88.9)	3.63 (92.2)
2	3.88 (98.6)	5.88 (149.4)	0.25 (6.4) ①	3.50 (88.9)	5.50 (139.7)
3	3.88 (98.6)	7.75 (196.9)	0.25 (6.4) ①	3.50 (88.9)	6.00 (152.4)
4	3.88 (98.6)	9.63 (244.6)	0.25 (6.4) ①	3.50 (88.9)	9.25 (235.0)
Stainless Steel					
1	5.00 (127.0)	5.00 (127.0)	2.50 (63.5) ②	3.25 (82.6)	1.88 (47.8)
2	5.00 (127.0)	6.88 (174.8)	2.50 (63.5) ②	3.25 (82.6)	3.63 (92.2)
3	5.00 (127.0)	8.63 (219.2)	2.50 (63.5) ②	3.25 (82.6)	5.50 (139.7)
4	5.00 (127.0)	10.50 (266.7)	2.50 (63.5) ②	3.25 (82.6)	7.25 (184.2)

Notes

① Depth given is for flat cover. Deep cover is 3/4 in (19.1 mm) deeper.

② Depth given includes pull box.

1

Approximate Dimensions in Inches (mm)

Flush and Long Pushbutton Half Shroud

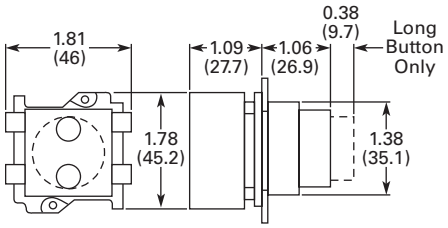

Half Shroud Is Same as Long Pushbutton with Lower Half of Guard Ring Cut Back

Push-Pull Switch

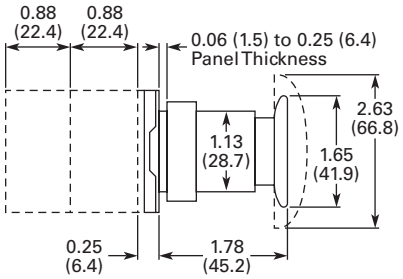

Mushroom and Jumbo Head Pushbutton

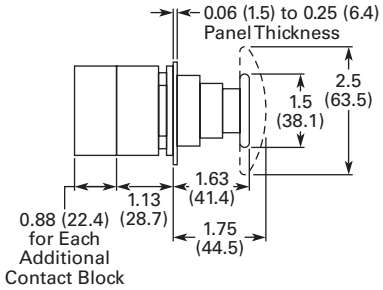

Flush Pushbutton Operator with Padlock Attachment

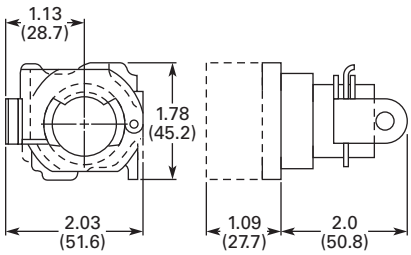

Pushbutton with Cylinder Lock

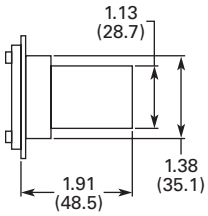

Mushroom Head Pushbutton Operator with Padlock Attachment

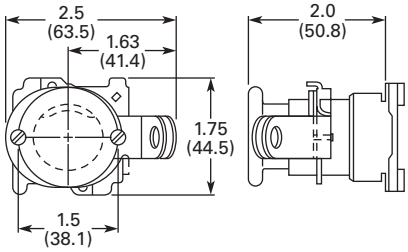

Illuminated Pushbutton

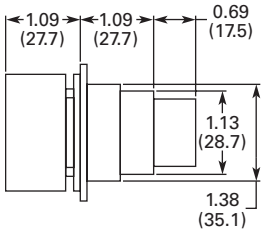

Indicating Light—Transformer Type

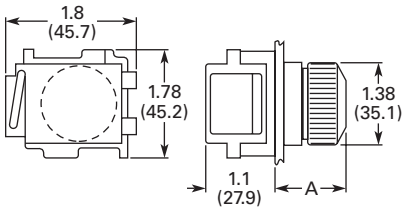

Approximate Dimensions in Inches (mm)

PresTest Indicating Light—Transformer Type

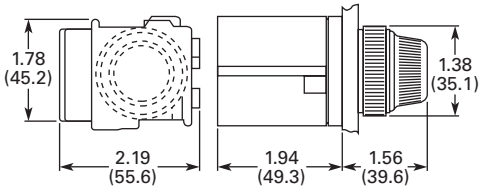

PresTest Indicating Light—Resistor Type

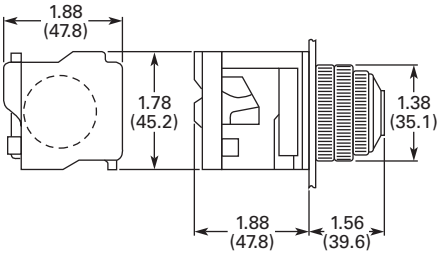

Jumbo Mushroom Head Pushbutton Operator with Padlock Attachment

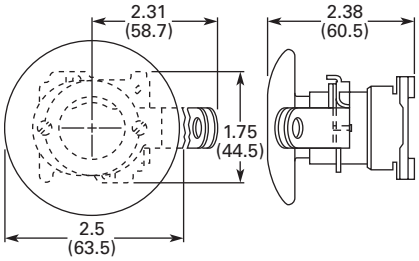

Master Test Indicating Light

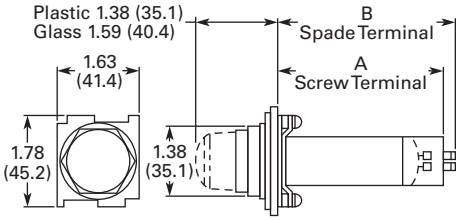

Description	B	C
Relay type	4.38 (111.2)	4.28 (108.7)
Solid-state type	2.94 (74.7)	2.88 (73.2)

Indicating Light—Resistor and Neon Type

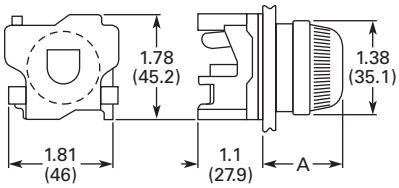

Lens	A
Plastic	1.38 (35.1)
Glass	1.56 (39.6)

Potentiometer Shaft

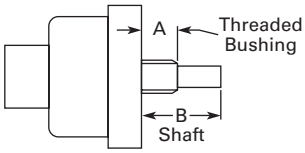

Shaft Dimensions of Potentiometer That C-H Operator Will Accept

Operator Catalog Number	A	B
10250T330	0.38 (9.7) dia. x 0.38 (9.7) long	0.25 (6.4) dia. x 0.63 (16) long

Approximate Dimensions in Inches (mm)

Coin Operated Selector Switch

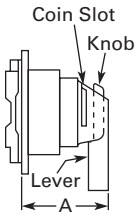

Operator	Dim. A
Knob	1.38 (35.1)
Lever	1.50 (38.1)
Coin slot	1.38 (35.1)

Key Operated Selector Switch

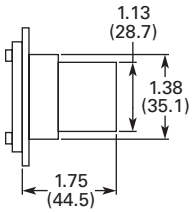

Illuminated Selector Switch

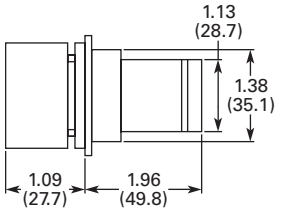

Roto-Push

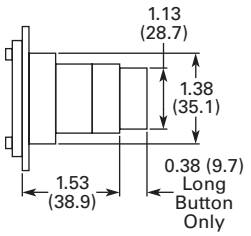

Wobble Stick Catalog No. 10250TA5

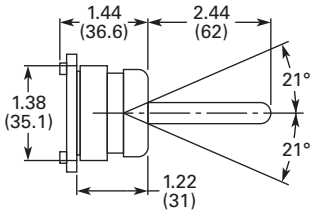

Lever Operator—For Use with Two Vertically Mounted Flush Pushbuttons Catalog No. 10250TA14

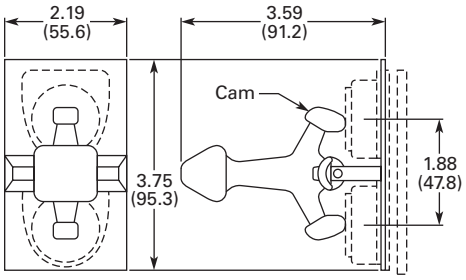

Flexible Boot—For Protecting Flush or Long Pushbutton Catalog No. 10250TA3 Typical

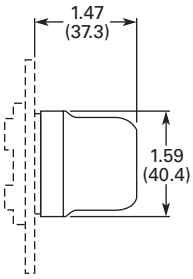

Transparent Flexible Boot—For Illuminated Pushbutton Catalog No. 10250TA25

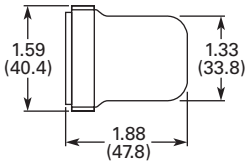

Approximate Dimensions in Inches (mm)

Padlock Attachment—For Knob Selector Switch Catalog No. 10250TA11

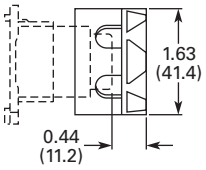

Padlock Attachment—For Flush Pushbutton Catalog No. 10250TA2

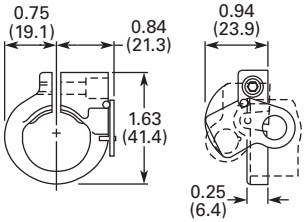

Padlock Attachment—For Extended Pushbutton Catalog No. 10250TA26

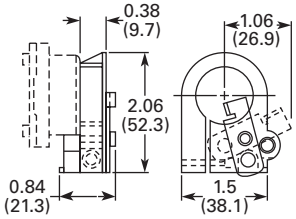

Maintained Pushbutton Catalog No. 10250TA66 Typical

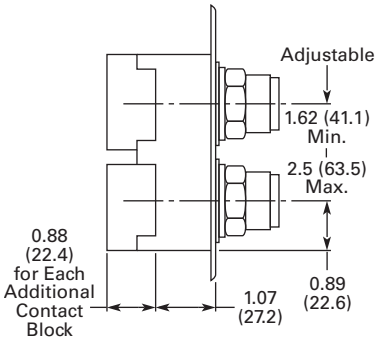

Maintained Contact Attachment Catalog No. 10250TA17 Typical

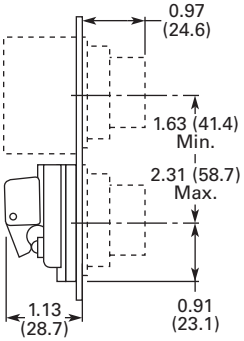

Padlock Cover Guard for Flush Pushbutton Catalog No. 10250TA36

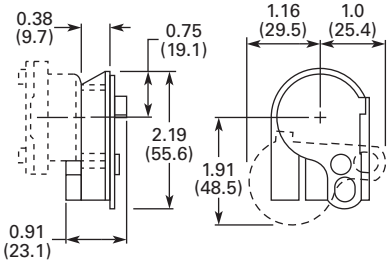

Padlock Attachment for Maintained Push-Pull Operator Catalog No. 10250TA64

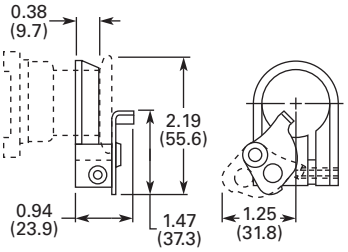

Protecting Shroud for Jumbo Mushroom Head Button Catalog No. 10250TA56

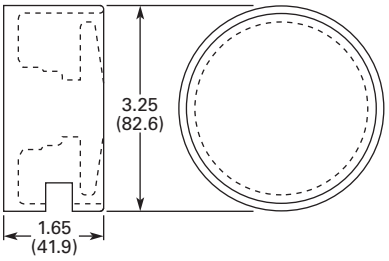

1

Approximate Dimensions in Inches (mm)

Protecting Shroud for Mushroom Head Button Catalog No. 10250TA6

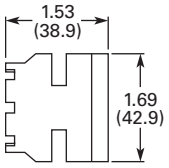

Extended Retaining Nut Catalog No. 10250TA12

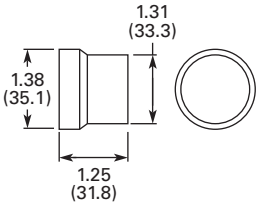

Panel Drilling and Minimum Spacing

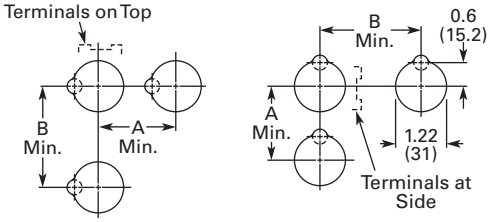

Horizontal Rows **Vertical Rows**

Protecting Shroud for Illuminated Pushbutton Catalog No. 10250TA15

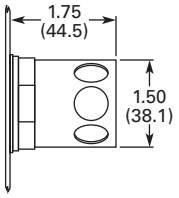

Lever for Roto-Push Operator Catalog No. 10250TA13

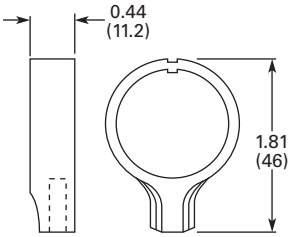

Padlock Hasp or Flip-Up Guard Catalog No. 10250TA38

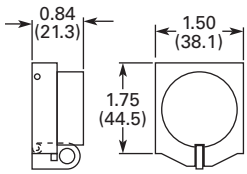

Legend Plate	A Min.	B Min.
1 or 2 Circuit Contact Blocks		
Small or none	1.63 (41.4)	2.25 (57.2)
Standard	1.75 (44.5)	2.25 (57.2)
Jumbo ①	2.25 (57.2)	2.25 (57.2)
Extra large	2.50 (63.5)	2.60 (66.0)
4 Circuit Contact Block 10250T44		
Small or none	1.88 (47.8)	2.25 (57.2)
Standard	1.88 (47.8)	2.25 (57.2)
Jumbo ①	2.25 (57.2)	2.25 (57.2)
Extra large	2.50 (63.5)	2.60 (66.0)

Notes

Locating nib hole or notch is 1.36–1.4 in (34.5–35.6 mm) #29 drill.

① If jumbo plates are to be placed one above the other vertically, add 0.13 (3.3) to minimum dimensions listed.

Approximate Dimensions in Inches (mm)

Multiple Button Guard

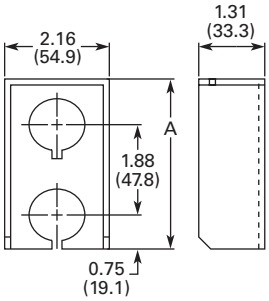

Number of Elements	A
2	4.0 (101.6)
3	5.88 (149.4)
4	7.88 (200.2)
7	13.38 (339.9)

Chain Hook Bracket

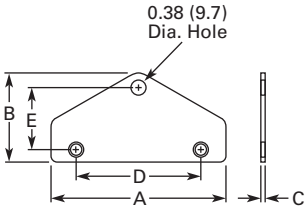

Enclosure Size (No. of Elements)	Wide A	High B	Deep C	Mounting D	E
2, 3 and 4	3.75 (95.3)	1.94 (49.3)	0.13 (3.3)	2.69 (68.3)	1.38 (35.1)
6 and 7	4.0 (101.6)	2.19 (55.6)	0.13 (3.3)	2.88 (73.2)	1.63 (41.4)

Master Test Module, Flasher Module and Legend Plate

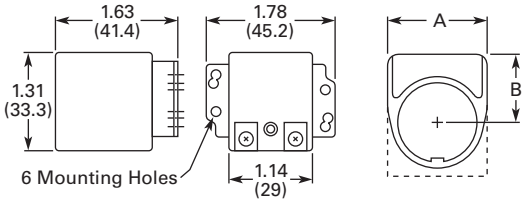

Master Test Module, Flasher Module **Legend Plate**

Legend Plate	A	B
1/2 Round Legend Plates		
Small	1.56 (39.6)	0.91 (23.1)
Standard	1.59 (40.4)	1.07 (27.2)
Jumbo	2.06 (52.3)	1.53 (38.9)
Square Legend Plates		
Small	1.59 (40.4) sq.	0.90 (22.9)
Standard	1.75 (44.5) sq.	1.06 (26.9) ①
Jumbo	2.19 (55.6) sq.	1.50 (38.1)
Extra large	2.44 (62.0) sq.	1.63 (41.4)

Notes

Locating nib hole or notch is 1.36–1.4 in (34.5–35.6 mm) #29 drill.

① For plastic legend plate, Dimension B is 1.12 (28.4).

30.5 mm Corrosion Resistant Watertight/Oiltight—E34

Contents

Description	*Page*
30.5 mm Corrosion Resistant Watertight/Oiltight—E34	
Product Overview	**V7-T1-285**
Product Identification	**V7-T1-286**
Catalog Number Selection	**V7-T1-287**
Ordering Complete Devices	**V7-T1-289**
Product Selection	
Non-Illuminated Momentary Pushbutton Units	**V7-T1-290**
Plastic Lens Indicating Light Units	**V7-T1-290**
Pushbuttons	**V7-T1-291**
Illuminated Pushbuttons and Indicating Lights	**V7-T1-292**
Push-Pull Units	**V7-T1-294**
Illuminated Push-Pull Units	**V7-T1-295**
Potentiometers	**V7-T1-297**
Push-Pull Operators	**V7-T1-298**
Selector Switch Units	**V7-T1-302**
Selector Switch Selection	**V7-T1-303**
Selector Switch Operators	**V7-T1-306**
Key Operators	**V7-T1-306**
Illuminated Selector Switch Operators	**V7-T1-308**
Accessories	**V7-T1-309**
Options	**V7-T1-311**
Replacement Parts	**V7-T1-317**
Technical Data and Specifications	**V7-T1-319**
Dimensions	**V7-T1-322**

Product Description

Eaton's E34 Series 30.5 mm pushbutton line features the same rugged die cast construction of our 10250T line with an additional two-layer 100% solid thermosetting cathodic epoxy coating. This coating provides a flat black smooth, consistent, corrosion resistant surface that has passed a demanding 600 hour salt spray test. (The industry standard for this 4X test requires only 200 hours.)

Features

- Epoxy-coated metal operators
- Corrosion resistant
- Integral ground screw terminal on operators
- FDA approved for sanitary chemical resistance requirements

Standards and Certifications

- CE EN60947-5-1 and 60947-5-5
- UL 508—File No. E131568
- CSA C22.2 No. 14—File No. LR68551
- FDA 3-A Sanitary Standards

Ingress Protection

When mounted in similarly rated enclosure—

- Standard indicating lights
  - UL (NEMA) Type 1, 2, 3, 3R, 3S, 4, 4X, 12, 13
  - IEC IP65
- All other operators
  - UL (NEMA) Type 1, 2, 3, 3R, 4, 4X, 12, 13
  - IEC IP65

Product Overview

Ultraviolet Light

E34 cathodic coating is not recommended for use in applications where exposure to ultraviolet light exists—use NEMA 4X 10250T operators.

Reliability Nibs

Eaton's contact blocks feature enclosed silver contacts with pointed "reliability nibs" for reliable performance from logic level up to 600V. To ensure reliable switching, nibs bite through oxide which can form on silver contacts, eliminating the need for expensive logic level blocks for most applications.

Reliability Nibs

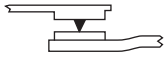

Dry Circuit

Medium Duty

Heavy-Duty

Diaphragm Seal with Drainage Holes

Liquid Drainage

Eaton's pushbutton operators offer front of panel drainage via holes in the operator bushing. Hidden from view by the mounting nut, these holes prevent buildup of liquid inside the operator, which can prevent operation in freezing environments. The holes also provide a route for escaping liquid in high pressure washdowns, effectively relieving pressure from the internal diaphragm seal, ensuring reliable sealing in applications even beyond NEMA 4.

Diaphragm Seal

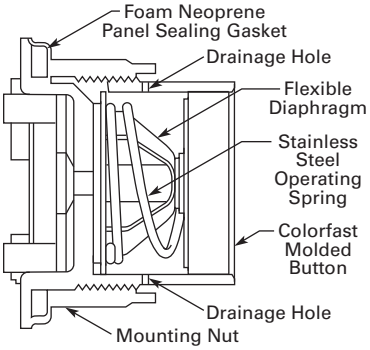

1

Product Identification

30.5 mm Corrosion Resistant Watertight/Oiltight—E34 Series

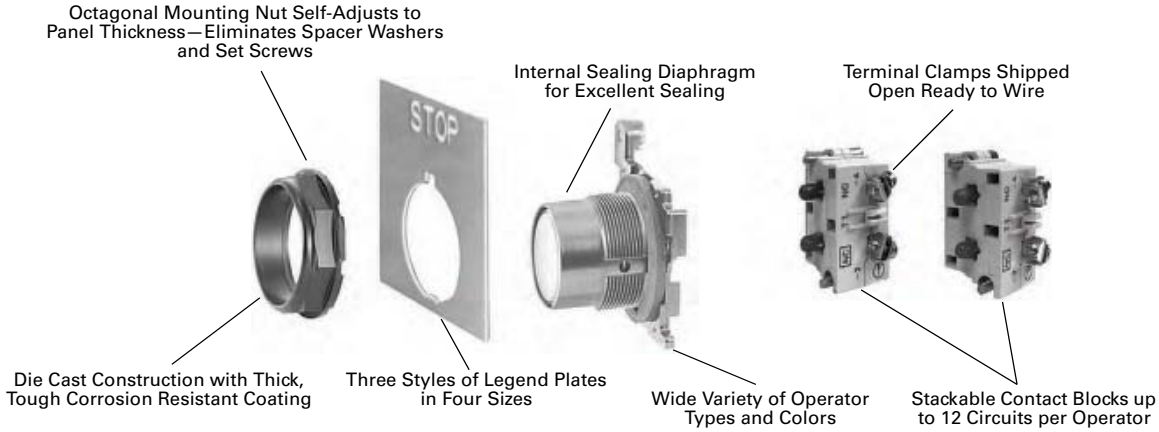

Catalog Number Selection

Catalog Number Selection is for illustrative purposes only and not to be used to create new catalog numbers.

Non-Illuminated Pushbuttons

E34 PB 1 – 1 ①

Operator
PB = Flush
EB = Extended
LB = 40 mm mushroom
JB = 65 mm mushroom
EVB = 1/2 shroud vertical mount
EHB = 1/2 shroud horizontal mount

Button Color	
1 = Black	**7** = Gray
2 = Red	**5** = White
3 = Green	**6** = Blue
4 = Yellow	**8** = Orange

Circuit
Blank = Operator only
1 = 1NO-1NC
2 = 2NO
3 = 2NC
51 = 1NC
53 = 1NO

Illuminated and Non-Illuminated Push-Pulls

E34 GDB 63 M2 __ – 1 ①

Operator
GDB = Two-position maintained
GEB = Three-position mom push-mom pull
GFB = Three-position mt push-mom pull
GHB = Three-position mom push-mom pull

Incandescent Light Unit	LED Light Unit
Blank = Non-illuminated	**Blank** = Non-illuminated
89 = 24V/XFR	**89L** = 24V/XFR
63 = 120V/XFR	**63L** = 120V/XFR
64 = 208V/XFR	**64L** = 208V/XFR
65 = 240V/XFR	**65L** = 240V/XFR
82 = 277V/XFR	**82L** = 277V/XFR
66 = 380V/XFR	**66L** = 380V/XFR
67 = 480V/XFR	**67L** = 480V/XFR
68 = 600V/XFR	**68L** = 600V/XFR
69 = 6V/FV	**97L** = Full voltage
70 = 12V/FV	
79 = 24V/FV	
83 = 32V/FV	
80 = 120V/RES	
81 = 240V/RES	

LED Voltage
Blank = Non-illuminated
Blank = Incandescent
06 = 6 Vac/Vdc
12 = 12 Vac/Vdc
24 = 24 Vac/Vdc
48 = 48 Vac/Vdc
60 = 60 Vac/Vdc
2A = 120 Vac
2D = 120 Vdc

Circuit
Blank = Operator only
1 = 1NO-1NC
2 = 2NO
3 = 2NC
51 = 1NC
53 = 1NO

Non-Illuminated	Illuminated		
Button	Incandescent	LED	Lens Type
C1 = Black 40 mm	**M2** =	**RD** =	Red 40 mm
C2 = Red 40 mm	**M2N8** =	**ED** =	Red 40 mm—"E" STOP
C2N8 = Red 40 mm—"E" STOP	**M3** =	**GD** =	Green 40 mm
C3 = Green 40 mm	**M6** =	**LD** =	Blue 40 mm
C6 = Blue 40 mm	**M9** =	**AD** =	Amber 40 mm
— = Black 65 mm	**M5** =	**WD** =	White 40 mm
J2 = Red 65 mm	**M0** =	**—** =	Clear 40 mm
J2N8 = Red 65 mm—"E" STOP			
— = Green 65 mm			
— = Yellow 65 mm			

Note

① Add **X** at end of catalog number to receive parts assembled from factory.

1

Catalog Number Selection is for illustrative purposes only and not to be used to create new catalog numbers.

Illuminated Pushbuttons

E34 XB 24 V2 ___ – 1 ①

Light Unit Type
XB = Transformer
CB = Full voltage
SB = Resistor

Incandescent Light Unit	LED Light Unit
024 = 24V/XFR	**024L** = 24V/XFR
120 = 120V/XFR	**120L** = 120V/XFR
240 = 240V/XFR	**240L** = 240V/XFR
277 = 277V/XFR	**277L** = 277V/XFR
380 = 380V/XFR	**380L** = 380V/XFR
480 = 480V/XFR	**480L** = 480V/XFR
600 = 600V/XFR	**600L** = 600V/XFR
06 = 6V/FV	**397L** = Full voltage
12 = 12V/FV	
24 = 24V/FV	
32 = 32V/FV	
48 = 48V/FV	
120 = 120V/RES	
240 = 240V/RES	

Incandescent Lens Color	LED Lens Color
V2 = Red	**RD** = Red
V3 = Green	**GD** = Green
V4 = Yellow	**YD** = Yellow
V5 = White	**WD** = White
V6 = Blue	**LD** = Blue
V9 = Amber	**AD** = Amber
V0 = Clear	

LED Voltage	
Blank = Incandescent	**48** = 48 Vac/Vdc
06 = 6 Vac/Vdc	**60** = 60 Vac/Vdc
12 = 12 Vac/Vdc	**2A** = 120 Vac
24 = 24 Vac/Vdc	**2D** = 120 Vdc

Circuit
Blank = Operator only
1 = 1NO-1NC
2 = 2NO
3 = 2NC
51 = 1NC
53 = 1NO

Standard Indicating Lights, PresTest and Master Test

E34 FB06 H2 ___ ①

Light Unit Type	
Standard—Incandescent	**Standard—LED**
TB120 = 120V/XFR	**TB120L** = 120V/XFR
TB240 = 240V/XFR	**TB240L** = 240V/XFR
TB277 = 277V/XFR	**TB277L** = 277V/XFR
TB380 = 380V/XFR	**TB380L** = 380V/XFR
TB480 = 480V/XFR	**TB480L** = 480V/XFR
TB600 = 600V/XFR	**TB600L** = 600V/XFR
FB06 = 6V/FV	**FB197L** = Full voltage
FB12 = 12V/FV	**PresTest—LED**
FB24 = 24V/FV	**TPB120L** = 120V/XFR
FB32 = 32V/FV	**TPB240L** = 240V/XFR
FB48 = 48V/FV	**TPB380L** = 380V/XFR
RB120 = 120V/RES	**TPB480L** = 480V/XFR
RB240 = 240V/RES	**TPB600L** = 600V/XFR
NB120 = 120V/neon	**FPB297L** = Full voltage
NB240 = 240V/neon	
PresTest—Incandescent	
TPB120 = 120V/XFR	
TPB240 = 240V/XFR	
TPB380 = 380V/XFR	
TPB480 = 480V/XFR	
TPB600 = 600V/XFR	
FPB06 = 6V/FV	
FPB12 = 12V/FV	
FPB24 = 24V/FV	
FPB32 = 32V/FV	
FPB48 = 48V/FV	
RPB120 = 120V/RES	
RPB240 = 240V/RES	

Plastic	Glass	Lens Color	Plastic	Glass	Lens Color
Standard/Master—Incandescent			**Standard/Master/PresTest—LED**		
H2 =	**G2** =	Red	**RP** =	**RG** =	Red
H3 =	**G3** =	Green	**GP** =	**GG** =	Green
H4 =	**G4** =	Yellow	**YP** =	**YG** =	Yellow
H5 =	**G5** =	White	**WP** =	**WG** =	White
H6 =	**G6** =	Blue	**LP** =	**LG** =	Blue
H9 =	**G9** =	Amber	**AP** =	**AG** =	Amber
H0 =	**G0** =	Clear			
PresTest—Incandescent					
V2 =	**P2** =	Red			
V3 =	**P3** =	Green			
V4 =	**P4** =	Yellow			
V5 =	**P5** =	White			
V6 =	**P6** =	Blue			
V9 =	**P9** =	Amber			
V0 =	**P0** =	Clear			

LED Voltage
Blank = Incandescent
06 = 6 Vac/Vdc
12 = 12 Vac/Vdc
24 = 24 Vac/Vdc
48 = 48 Vac/Vdc
60 = 60 Vac/Vdc
2A = 120 Vac
2D = 120 Vdc

Note

① Add **X** at end of catalog number to receive parts assembled from factory.

Catalog Number Selection is for illustrative purposes only and not to be used to create new catalog numbers.

Ordering Complete Devices

Complete E34 pushbuttons, indicating lights and/or selector switch operators including contact block(s) and legend plate can be ordered using a single composite catalog number. The individually packaged components will be shipped unassembled in a single overpack carton marked with the composite catalog number.

Ordering Example

Illuminated Pushbutton Device—Catalog Number E34XB120V2-153SP90

For a complete Catalog Number breakdown, see **Pages V7-T1-287** to **V7-T1-288.**

For Complete E34 Device Ordering

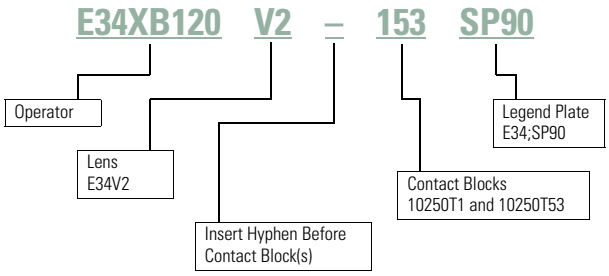

1

Product Selection

Non-Illuminated Momentary Pushbutton Units

UL (NEMA) Type 3, 3R, 4, 4X, 12, 13

Flush Button

Extended Button

Mushroom Button

Jumbo Mushroom

Pushbutton Units

Contact Type	Button Color	Flush Button Catalog Number	Extended Button Catalog Number	Mushroom Button Catalog Number	Jumbo Mushroom ① Catalog Number
1NO	Black	**E34PB1-53X**	**E34EB1-53X**	**E34LB1-53X**	**E34JB1-53X**
	Red	**E34PB2-53X**	**E34EB2-53X**	**E34LB2-53X**	**E34JB2-53X**
	Green	**E34PB3-53X**	**E34EB3-53X**	**E34LB3-53X**	**E34JB3-53X**
	Red—Engraved EMERG. STOP	—	—	—	**E34JB2N8-53X**
1NC	Black	**E34PB1-51X**	**E34EB1-51X**	**E34LB1-51X**	**E34JB1-51X**
	Red	**E34PB2-51X**	**E34EB2-51X**	**E34LB2-51X**	**E34JB2-51X**
	Green	**E34PB3-51X**	**E34EB3-51X**	**E34LB3-51X**	**E34JB3-51X**
	Red—Engraved EMERG. STOP	—	—	—	**E34JB2N8-51X**
1NO-1NC	Black	**E34PB1-1X**	**E34EB1-1X**	**E34LB1-1X**	**E34JB1-1X**
	Red	**E34PB2-1X**	**E34EB2-1X**	**E34LB2-1X**	**E34JB2-1X**
	Green	**E34PB3-1X**	**E34EB3-1X**	**E34LB3-1X**	**E34JB3-1X**
	Red—Engraved EMERG. STOP	—	—	—	**E34JB2N8-1X**

Plastic Lens Indicating Light Units

UL (NEMA) Type 3, 3R, 4, 4X, 12, 13

24V Full Voltage Indicating Light

Indicating Light Units

Type	Voltage	Color	LED/Lamp Number	Indicating Light ① Catalog Number
LED Lamp				
Full voltage	24 Vac/Vdc	Red	Bayonet base	**E34FB197LRP24**
		Green		**E34FB197LGP24**
		Amber		**E34FB197LAP24**
	120 Vac	Red		**E34FB197LRP2A**
		Green		**E34FB197LGP2A**
		Amber		**E34FB197LAP2A**
Incandescent Lamp				
Full voltage	24 Vac/Vdc	Red	#757	**E34FB24H2X**
		Green		**E34FB24H3X**
		Amber		**E34FB24H9X**
Resistor	120 Vac/Vdc	Red	120MB	**E34RB120H2X**
		Green		**E34RB120H3X**
		Amber		**E34RB120H9X**
Transformer	120 Vac 50/60 Hz	Red	#755	**E34TB120H2X**
		Green		**E34TB120H3X**
		Amber		**E34TB120H9X**

Notes

Use NEMA 4X 10250T operators where exposed to ultraviolet light, see **Pages V7-T1-213** to **V7-T1-283**.

① Anodized aluminum head—may not be suitable for some corrosive environments.

Pushbuttons

UL (NEMA) Type 3, 3R, 4, 4X, 12, 13

Momentary Pushbutton Operators, Non-Illuminated

	Button	Color	Catalog Number	
E34PB_	Flush button	Black	**E34PB1**	
		Red	**E34PB2**	
		Green	**E34PB3**	
		Yellow	**E34PB4**	
		White	**E34PB5**	
		Blue	**E34PB6**	
		Gray	**E34PB7**	
		Orange	**E34PB8**	
E34EB_	Extended button	Black	**E34EB1**	
		Red	**E34EB2**	
		Green	**E34EB3**	
		Yellow	**E34EB4**	
		White	**E34EB5**	
		Blue	**E34EB6**	
		Gray	**E34EB7**	
		Orange	**E34EB8**	
E34EHB_	Half shrouded button		**Vertical**	**Horizontal**
		Black	**E34EVB1**	**E34EHB1**
		Red	**E34EVB2**	**E34EHB2**
		Green	**E34EVB3**	**E34EHB3**
		Yellow	**E34EVB4**	**E34EHB4**
		White	**E34EVB5**	**E34EHB5**
		Blue	**E34EVB6**	**E34EHB6**
		Gray	**E34EVB7**	**E34EHB7**
		Orange	**E34EVB8**	**E34EHB8**
E34LB_	Mushroom button	Black	**E34LB1**	
		Red	**E34LB2**	
		Green	**E34LB3**	
		Yellow	**E34LB4**	
		Blue	**E34LB6**	
E34JB_	Anodized aluminum jumbo mushroom button ①	Black	**E34JB1**	
		Red	**E34JB2**	
		Red (Engraved EMERG. STOP)	**E34JB2N8**	
		Green	**E34JB3**	
		Yellow	**E34JB4**	

Notes

Use NEMA 4X 10250T operators where exposed to ultraviolet light, see **Pages V7-T1-213** to **V7-T1-283**.

① Anodized aluminum head—may not be suitable for some corrosive environments.

1

Illuminated Pushbuttons and Indicating Lights

Illuminated Pushbutton

Indicating Light

PresTest

Operators without Lens

Type	Voltage	Lamp Number	Illuminated Pushbutton Catalog Number	Indicating Light Catalog Number	PresTest Catalog Number
LED Lamp (LEDs not included) ①					
Full voltage	—	Bayonet base	**E34CB497L**	**E34FB197L**	**E34FPB297L**
Transformer AC only	24		**E34XB024L**	—	—
	120		**E34XB120L**	**E34TB120L**	**E34TPB120L**
	240		**E34XB240L**	**E34TB240L**	**E34TPB240L**
	277		**E34XB277L**	**E34TB277L**	—
	380		**E34XB380L**	**E34TB380L**	**E34TPB380L**
	480		**E34XB480L**	**E34TB480L**	**E34TPB480L**
	600		**E34XB600L**	**E34TB600L**	**E34TPB600L**
Incandescent Lamp					
Full voltage AC/DC	6	#755	**E34CB06**	**E34FB06**	**E34FPB06**
	12	#756	**E34CB12**	**E34FB12**	**E34FPB12**
	24	#757	**E34CB24**	**E34FB24**	**E34FPB24**
	32	#1828	**E34CB32**	**E34FB32**	**E34FPB32**
	48	#1835	**E34CB48**	**E34FB48**	**E34FPB48**
Resistor AC/DC ②	120	120MB	**E34SB120**	**E34RB120**	**E34RPB120**
	240		**E34SB240**	**E34RB240**	**E34RPB240**
Transformer AC only	24	#755	**E34XB024**	—	—
	120		**E34XB120**	**E34TB120**	**E34TPB120**
	240		**E34XB240**	**E34TB240**	**E34TPB240**
	277		**E34XB277**	**E34TB277**	—
	380		**E34XB380**	**E34TB380**	**E34TPB380**
	480		**E34XB480**	**E34TB480**	**E34TPB480**
	600		**E34XB600**	**E34TB600**	**E34TPB600**
Neon AC/DC	120	NE51H-R-22	—	**E34NB120**	—
	240	NE51H-4-68	—	**E34NB240**	—

Notes

Use NEMA 4X 10250T operators where exposed to ultraviolet light, see **Pages V7-T1-213** to **V7-T1-283**.

① These units do not include lamps. Order LED separately to match lens color, see **Page V7-T1-269** for LED Selection and **Pages V7-T1-287** to **V7-T1-288** for Catalog Numbering Selection.

② Resistor units are not available for use with LEDs, choose either transformer or full voltage LED style.

Plastic

Glass

Indicating Light Lens

Color	Plastic Catalog Number	Glass ① Catalog Number
Red	**E34H2**	**E34G2**
Green	**E34H3**	**E34G3**
Yellow	**E34H4**	**E34G4**
White	**E34H5**	**E34G5**
Blue	**E34H6**	**E34G6**
Ambler	**E34H9**	**E34G9**
Clear	**E34H0**	**E34G0**

E34V_

Illuminated Pushbutton Lens

Color	Catalog Number
Red	**E34V2**
Green	**E34V3**
Yellow	**E34V4**
White	**E34V5**
Blue	**E34V6**
Ambler	**E34V9**
Clear	**E34V0**

Plastic

Glass

PresTest Lens

Color	Plastic Catalog Number	Glass ① Catalog Number
Red	**E34V2**	**E34P2**
Green	**E34V3**	**E34P3**
Yellow	**E34V4**	**E34P4**
White	**E34V5**	**E34P5**
Blue	**E34V6**	**E34P6**
Ambler	**E34V9**	**E34P9**
Clear	**E34V0**	**E34P0**

Note

① Glass lens has black anodized aluminum bezel.

1

Push-Pull Units

UL (NEMA) Type 3, 3R, 4, 4X, 12, 13

- Two- and three-position
- Non-illuminated

Two-Position Push-Pull Unit

Two-Position Push-Pull Units, Non-Illuminated

Operator Position ① Pull	Push	Button Type/Color ②	Contact Type	Mounting Location A	Mounting Location B	Catalog Number
Maintained Push, Maintained Pull						
O	X	40 mm/red	1NO			**E34GDBC2-1X**
X	O	40 mm engraved EMERG. STOP/red	1NC			**E34GDBC2N8-1X**
		65 mm aluminum engraved EMERG. STOP/red				**E34GDBJ2N8-1X**

Three-Position Push-Pull Unit

Three-Position Push-Pull Units, Non-Illuminated

Operator Position ① Pull	Intermediate	Push	Button Type/Color ②	Contact Type	Mounting Location A	Mounting Location B	Catalog Number
Maintained Push, Momentary Pull							
X	O	O	40 mm/black	1NC			**E34GFBC1-3X**
X	X	O	40 mm/red	1NC			**E34GFBC2-3X**
			40 mm engraved EMERG. STOP/red				**E34GFBC2N8-3X**
Momentary Push, Momentary Pull							
X	O	O	40 mm/black	1NC			**E34GEBC1-3X**
X	X	O	40 mm/red	1NC			**E34GEBC2-3X**
O	O	X	40 mm/black	1NO			**E34GHBC1-1X**
X	O	O	40 mm/red	1NC			**E34GHBC2-1X**

Button and Color Selection

Standard

Jumbo Mushroom Head

Color	Suffix Code	Catalog Number
Standard—40 mm		
Black	**C1**	**E34C1**
Red	**C2**	**E34C2**
Red (EMERG. STOP)	**C2N8**	**E34C2N8**
Green	**C3**	**E34C3**
Blue	**C6**	**E34C6**
Jumbo Mushroom Head ③ (Anodized) Aluminum—65 mm		
Red	**J2**	**E34J2**
Red (EMERG. STOP)	**J2N8**	**E34J2N8**

Notes

Use NEMA 4X 10250T operators where exposed to ultraviolet light, see **Pages V7-T1-213** to **V7-T1-283**.

① X = closed circuit, O = open circuit.

② To order different type or color buttons, substitute the underlined characters with appropriate suffix code from the table. Example: E34GDB**C6**-1X.

③ Anodized aluminum may not be suitable for use on some corrosive applications.

Illuminated Push-Pull Units

UL (NEMA) Type 3, 3R, 4, 4X, 12, 13

- Two-position maintained
- Illuminated

Illuminated Push-Pull Unit

Two-Position Illuminated Maintained Push, Maintained Pull

Operator Position ①

Maintained—Pull	Maintained—Intermediate	Lamp	Type	Voltage	Contact Type	Mounting Location A	Mounting Location B	LED/Lamp Number	Red Standard Push-Pull Catalog Number ②
O	X	LED	Full voltage	24 Vac/Vdc	1NO			Bayonet base	**E34GDB97LRD24-1X**
X	O			120 Vac/Vdc	1NC				**E34GDB97LRD2A-1X**
			Transformer	24 Vac					**E34GDB89LRD06-1X**
				120 Vac					**E34GDB63LRD06-1X**
O	X	Incan-descent	Full voltage	24 Vac/Vdc	1NO			#757	**E34GDB79M2-1X**
X	O		Resistor	120 Vac/Vdc	1NC			120MB	**E34GDB80M2-1X**
			Transformer	24 Vac				#755	**E34GDB89M2-1X**
				120 Vac					**E34GDB63M2-1X**

Standard

Lens and Color Selection

Color	Incandescent Suffix Code	LED Suffix Code	Catalog Number
Standard			
Red	**M2**	**RD**	**E34M2**
Red (EMER. STOP)	**M2N8**	**ED**	**E34M2N8**
Green	**M3**	**GD**	**E34M3**
Blue	**M6**	**LD**	**E34M6**
Amber	**M9**	**AD**	**E34M9**
White	**M5**	**WD**	**E34M5**
Clear	**M0**	**CD**	**E34M0**

Notes

Use NEMA 4X 10250T operators where exposed to ultraviolet light, see **Pages V7-T1-213** to **V7-T1-283**.

① X = closed circuit, O = open circuit.

② To order different type or color lens, substitute the underlined characters with appropriate suffix code from Lens and Color Selection table above. Example: E34GDB79**M3**-1X. For LEDs with different voltages see ordering example on **Page V7-T1-301**.

1

UL (NEMA) Type 3, 3R, 4, 4X, 12, 13

- Three-position maintained
- Illuminated

Illuminated Push-Pull Unit

Three-Position Illuminated Momentary Push, Momentary Pull

Operator Position ①

Momentary—Pull	Maintained—Intermediate	Momentary—Push	Lamp	Type	Voltage	Contact Type	Mounting Location A	Mounting Location B	LED/Lamp Number	Red Standard Push-Pull Catalog Number ②
0 X	0 0	X 0	LED	Full voltage	24 Vac/Vdc	1NO			Bayonet base	**E34GHB97LRD24-1X**
					120 Vac	1NC				**E34GHB97LRD2A-1X**
				Trans-former	24 Vac					**E34GHB89LRD06-1X**
					120 Vac					**E34GHB63LRD06-1X**
X X	0 X	0 0		Full voltage	24 Vac/Vdc	1NC			Bayonet base	**E34GEB97LRD24-3X**
					120 Vac	1NC				**E34GEB97LRD2A-3X**
				Trans-former	24 Vac					**E34GEB89LRD06-3X**
					120 Vac					**E34GEB63LRD06-3X**
0 X	0 0	X 0	Incan-descent	Full voltage	24 Vac/Vdc	1NO			#757	**E34GHB79M2-1X**
				Resistor	120 Vac	1NC			120MB	**E34GHB80M2-1X**
				Trans-former	24 Vac				#755	**E34GHB89M2-1X**
					120 Vac					**E34GHB63M2-1X**
X X	0 X	0 0		Full voltage	24 Vac/Vdc	1NC			#757	**E34GEB79M2-3X**
				Resistor	120 Vac	1NC			120MB	**E34GEB80M2-3X**
				Trans-former	24 Vac				#755	**E34GEB89M2-3X**
					120 Vac					**E34GEB63M2-3X**

Notes

Use NEMA 4X 10250T operators where exposed to ultraviolet light, see **Pages V7-T1-213** to **V7-T1-283**.

① X = closed circuit, 0 = open circuit.

② To order different type or color lens, substitute the underlined characters with appropriate suffix code from Lens and Color Selection table on the bottom of **Page V7-T1-295.** Example: E34GEB79**M3**-3X. For LEDs with different voltages see ordering example on **Page V7-T1-301**.

UL (NEMA) Type 3, 3R, 4, 4X, 12, 13

- Three-position—maintained push, momentary pull
- Illuminated

Illuminated Push-Pull Unit

Three-Position Illuminated Maintained Push, Momentary Pull

Operator Position ①

Momentary—Pull	Maintained—Intermediate	Maintained—Push	Lamp	Type	Voltage	Contact Type	Mounting Location A	Mounting Location B	LED/Lamp Number	Red Standard Push-Pull Catalog Number ②
X X	O X	O O	LED	Full voltage	24 Vac/Vdc	1NC			Bayonet base	**E34GFB97LRD24-3X**
					120 Vac	1NC				**E34GFB97LRD2A-3X**
				Trans-former	24 Vac					**E34GFB89LRD06-3X**
					120 Vac					**E34GFB63LRD06-3X**
X X	O X	O O	Incan-descent	Full voltage	24 Vac/Vdc	1NC			#757	**E34GFB79M2-3X**
				Resistor	120 Vac	1NC			120MB	**E34GFB80M2-3X**
				Trans-former	24 Vac				#755	**E34GFB89M2-3X**
					120 Vac					**E34GFB63M2-3X**

Vertical or Horizontal One-Hole Mounting ③

Potentiometers

UL (NEMA) Type 3, 3R, 4, 4X, 12, 13

Potentiometer with Knob and Standard Dial Plate—Linear Type ±10%

Potentiometer Ohms	Catalog Number
2 Watt (60V Max.) Single Potentiometer with Standard Aluminum Dial Plate ④⑤	
1000	**E34PDB1F1**
2500	**E34PDB1F2**
5000	**E34PDB1F5**
10000	**E34PDB1F10**
25000	**E34PDB1F25**
50000	**E34PDB1F50**
Operator only ⑥	**E34PDB1A0**
Alternative—black plastic large legend with standard markings	**E34LP99**

Dimensions, see **Page V7-T1-322**.

Notes

Use NEMA 4X 10250T operators where exposed to ultraviolet light, see **Pages V7-T1-213** to **V7-T1-283**.

① X = closed circuit, O = open circuit.

② To order different type or color lens, substitute the underlined characters with appropriate suffix code from table on the bottom of **Page V7-T1-295**.
Example: E34GFB79**M3**-3X. For LEDs with different voltages see ordering example on **Page V7-T1-301**.

③ Shown with standard aluminum dial plate.

④ Large dial plate with space for legend is available at no charge. To order, add suffix **36** to catalog number.
Example: E34PDB1F1**36**. To order separately, see footnote ⑤ below.

⑤ Large dial plate has space at top for 15 letters. 3/32 in high. For custom stamped legend plates, order legend plate as separate item **10250TR30** and specify stamping.

⑥ For use with commercially purchased potentiometers having shaft dimensions per dimension drawing on **Page V7-T1-274**.

1

Push-Pull Operators

An illuminated push-pull pushbutton unit, arranged for one-hole mounting, can replace two pushbuttons and a pilot light or the non-illuminated form can replace two pushbuttons. These units are available in three basic types:

- **Maintained**—(Two-position). Maintains in the pulled or pushed position until manually actuated to the opposite mode.
- **Momentary**—(Three-position). Spring returns to an intermediate position when pulled or pushed and released.
- **Momentary Pull, Maintained Push**—(Three-position). Spring returns to intermediate position when pulled. Maintains in pushed position until manually returned to intermediate (ready to reset) position. Maintained stop holds circuit open and will prevent other series connected operators from starting the system.

The operators, buttons, contact blocks, etc., are offered as building block components that can be intermixed to satisfy many requirements. This minimizes the need for a varied and costly inventory.

Application Guide

To assist in the selection of contact blocks, the sketch below shows pictorially by symbols **A** and **B** locations of contact circuits after assembly of contact blocks and adapter to the operator. The table below shows the effect of the push and pull operations on either NO or NC contacts. (X = contact closed, O = contact open).

Contact Circuit Locations

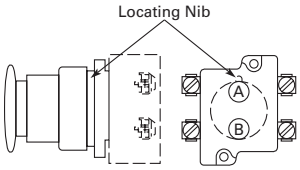

Two-Position Maint. Push-Pull ①

Push-Pull Operator Components

Type of Operator	Operator Position and Circuit Arrangement: Out—Pull A		Out—Pull B	Intermediate A		Intermediate B	In—Push A		In—Push B	Contact Block ②	Catalog Number
Two-Position Operator without Lens											
Maintained push-pull	O X	or	O X	No intermediate position			X O	or	X O	1NO 1NC	**E34GDB**
	O X		O X				X O		X O	2NO 2NC	
Three-Position Operator without Lens											
Momentary push-pull	O X	or	O X	O O	or	O X	X O	or	O O	1NO 1NC	**E34GEB** ②
	O X		O X	O O		O X	X O		O O	2NO 2NC	
Maintained push-momentary pull	O X	or	O X	O O	or	O X	X O	or	O O	1NO 1NC	**E34GFB** ②
	O X		O X	O O		O X	X O		O O	2NO 2NC	
Momentary push-pull	O X	or	O X	O O	or	O O	X O	or	X O	1NO 1NC	**E34GHB** ②
	O X		O X	O O		O O	X O		X O	2NO 2NC	

Notes

Use NEMA 4X 10250T operators where exposed to ultraviolet light, see **Pages V7-T1-213** to **V7-T1-283**.

See Typical Applications on **Page V7-T1-233**.

① Shown without button on lens.

② Maximum of two blocks, four circuits. Special function contact blocks shown on **Page V7-T1-316** CANNOT be used with three-position push-pull operators E34GEB, E34GFB or E34GHB.

Push-Pull Light Units, Lenses and Buttons

Ordering Example with One Composite Number

Non-illuminated:
E34GDB + E34C2 + 10250T1 = **E34GDBC2-1X**

Incandescent:
E34GDB + 10250T79 + E34M2 + 10250T1 = **E34GDB79M2-1X**

LED:
E34GDB + 10250T97L + E34M2 + Voltage Code + 10250T1 = **E34GDB97LRD24-1X**

06—6 Vac/Vdc
12—12 Vac/Vdc
24—24 Vac/Vdc
48—48 Vac/Vdc
60—60 Vac/Vdc
2A—120 Vac
2D—120 Vdc

Light Units for Illuminated Push-Pull Devices

Light Unit Type	Type	Voltage	LED/Lamp Number	Catalog Number
LED (LEDs not included) ①	Full voltage	—	Bayonet base	**10250T97L**
	Transformer AC only 50/60 Hz	24		**10250T89L**
		120		**10250T63L**
		208		**10250T64L**
		240		**10250T65L**
		277		**10250T82L**
		380		**10250T66L**
		480		**10250T67L**
		600		**10250T68L**
Incandescent	Full voltage AC or DC	6	#755 #756 #757 #1828	**10250T69**
		12		**10250T70**
		24/28		**10250T79**
		32		**10250T83**
	Resistor AC or DC	120	120MB	**10250T80**
		240		**10250T81**
	Transformer AC only 50/60 Hz	24	#755	**10250T89**
		120		**10250T63**
		208		**10250T64**
		240		**10250T65**
		277		**10250T82**
		380		**10250T66**
		480		**10250T67**
		600		**10250T68**

Notes

Use NEMA 4X 10250T operators where exposed to ultraviolet light, see **Pages V7-T1-213** to **V7-T1-283**.

① These units do not include lamps. Order LED separately to match lens color from chart on **Page V7-T1-301**

Buttons for Non-Illuminated Push-Pull Devices

Standard

Jumbo Mushroom Head

Color	Incandescent Suffix Code	Catalog Number
Standard Button		
Black	**C1**	**E34C1**
Red	**C2**	**E34C2**
Red (EMERG. STOP)	**C2N8**	**E34C2N8**
Green	**C3**	**E34C3**
Blue	**C6**	**E34C6**
Jumbo Mushroom Head		
Red ①	**J2**	**E34J2**
Red (EMERG. STOP)	**J2N8**	**E34J2N8**

Alternate Lenses for Illuminated Push-Pull Devices

E34M_

Color	Incandescent Suffix Code	LED Suffix Code ②	Catalog Number
Red	**M2**	**RD**	**E34M2**
Red (EMERG. STOP)	**M2N8**	**ED**	**E34M2N8**
Green	**M3**	**GD**	**E34M3**
Blue	**M6**	**LD**	**E34M6**
Amber	**M9**	**AD**	**E34M9**
White	**M5**	**WD**	**E34M5**
Clear	**M0**	—	**E34M0**

Notes

Use NEMA 4X 10250T operators where exposed to ultraviolet light, see **Pages V7-T1-213** to **V7-T1-283**.

① Anodized aluminum may not be suitable for use on some corrosive applications.

② Suffix codes should only be used for assembling composite catalog numbers. To order lens, order by catalog number.

Standard LED Lamp

LED Selection

Voltage	Color	Catalog Number
6 Vac/Vdc suitable for use with transformers	Red	**E22LED006RN**
	Orange	**E22LED006ON**
	Yellow	**E22LED006YN**
	Green	**E22LED006GN**
	Blue	**E22LED006BN**
	White	**E22LED006WN**
12 Vac/Vdc	Red	**E22LED012RN**
	Orange	**E22LED012ON**
	Yellow	**E22LED012YN**
	Green	**E22LED012GN**
	Blue	**E22LED012BN**
	White	**E22LED012WN**
24 Vac/Vdc	Red	**E22LED024RN**
	Orange	**E22LED024ON**
	Yellow	**E22LED024YN**
	Green	**E22LED024GN**
	Blue	**E22LED024BN**
	White	**E22LED024WN**
48 Vac/Vdc	Red	**E22LED048RN**
	Orange	**E22LED048ON**
	Yellow	**E22LED048YN**
	Green	**E22LED048GN**
	Blue	**E22LED048BN**
	White	**E22LED048WN**

Voltage	Color	Catalog Number
60 Vac/Vdc	Red	**E22LED060RN**
	Orange	**E22LED060ON**
	Yellow	**E22LED060YN**
	Green	**E22LED060GN**
	Blue	**E22LED060BN**
	White	**E22LED060WN**
120 Vac	Red	**E22LED120RA**
	Orange	**E22LED120OA**
	Yellow	**E22LED120YA**
	Green	**E22LED120GA**
	Blue	**E22LED120BA**
	White	**E22LED120WA**
120 Vdc	Red	**E22LED120RD**
	Orange	**E22LED120OD**
	Yellow	**E22LED120YD**
	Green	**E22LED120GD**
	Blue	**E22LED120BD**
	White	**E22LED120WD**

1

Selector Switch Units

UL (NEMA) Type 3, 3R, 4, 4X, 12, 13

- Two-, three- and four-position—maintained
- Non-illuminated and illuminated

Two-Position Maint. Switch Knob

Two-Position Selector Switch

Operator Position ①		Operator Action ②	Contact Type	Mounting Location A	Mounting Location B	Cam Code	Non-Illuminated Black Knob Catalog Number ③	Non-Illuminated Black Lever Catalog Number ③	Illuminated—120V Transformer Red Knob Catalog Number ③	Illuminated—120V Transformer Red Lever Catalog Number ③
X	0	M M	1NC			1	E34VFBK1-1X	E34VFBL1-1X	E34VFB120ER-1X	E34VFB120FR-1X
0	X		1NO							

Three-Position Maint. Switch Knob

Three-Position Selector Switch

Operator Position ①			Operator Action ②	Contact Type	Mounting Location A	Mounting Location B	Cam Code	Non-Illuminated Black Knob Catalog Number ③	Non-Illuminated Black Lever Catalog Number ③	Illuminated—120V Transformer Red Knob Catalog Number ③	Illuminated—120V Transformer Red Lever Catalog Number ③
X	0	0	M M M	1NO			3	E34VHBK1-2X	E34VHBL1-2X	E34VHB120TER-2X	E34VHB120TFR-2X
0	0	X		1NO							
X	0	0		1NO			3	E34VHBK1-23X	E34VHBL1-23X	E34VHB120TER-23X	E34VHB120TFR-23X
0	X	0									
0	0	X		2NC (Series)							
				1NO							

Four-Position Maint. Switch Lever

Four-Position Selector Switch

Operator Position ①				Operator Action ②	Contact Type	Mounting Location A	Mounting Location B	Cam Code	Non-Illuminated Black Knob Catalog Number ③	Non-Illuminated Black Lever Catalog Number ③	Illuminated—120V Transformer Red Knob Catalog Number ③	Illuminated—120V Transformer Red Lever Catalog Number ③
X	0	0	0	M M M M	1NC			7	E34VTBK1-23X	E34VTBL1-23X	E34VRB120TER-23X	E34VRB120TFR-23X
0	X	0	0		1NO							
0	0	X	0									
0	0	0	X		1NO							
					1NC							

Color Selection, Non-Illuminated

Color	Code Letter	Color	Code Letter
Black	**1**	White	**5**
Red	**2**	Blue	**6**
Green	**3**	Gray	**7**
Yellow	**4**	Orange	**8**

Notes

For Light Unit Voltage Suffix and Knobs, Levers tables, see **Page V7-T1-308**.

Use NEMA 4X 10250T operators where exposed to ultraviolet light, see **Pages V7-T1-213** to **V7-T1-283**.

① X = closed circuit, 0 = open circuit.

② M = Maintained.

③ To order different type or color selector switch, substitute the underlined character with appropriate suffix code from the Color Selection table. Example: E34VFBK**2**-X1.

Selector Switch Selection

Cam and Contact Block Selection

Selector switches in their varied forms (two-position, three-position and four-position) are a big factor contributing to the great flexibility of control that a well rounded line of "pushbuttons" can achieve. Because of their flexibility, they tend to cause difficulty with product selection and application. The following systematic approach should simplify that task.

Cam and contact block selection is better understood if you:

- Work with each incoming and outgoing wire/circuit separately.
- Recognize the terms NO and NC only identify the type of contact by its mode before mounting to the operator. The "X-O" chart (**Page V7-T1-305**) shows how that contact will act after assembly to the operator with the selected cam shape. X = closed circuit, O = open circuit.
- Up to six NO or NC contacts may be mounted behind each plunger location for a total of twelve contacts. Single circuit contact blocks have only one plunger with the other side of the block "open." Therefore, single circuit contact blocks transmit motion to blocks behind them only for the position containing the circuit.
- Each cam has two separate lobes, each of which operates one of the two contact block plungers independently of each other. Those are identified as position A (locating nib side) and position B (opposite of locating nib). The position designations give direction in selecting and mounting of the contact blocks.

Contact Circuit Locations

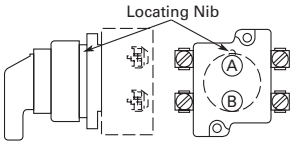

Systematic Approach

Application: **HAND-OFF-AUTO** selector switch. In this circuit, one incoming line is distributed to two other outgoing circuits by the switch. The two circuits can be looked at individually.

Step 1: Elementary Diagram.
Construct on paper, or in your mind, a simple elementary diagram of the switching scheme as follows:

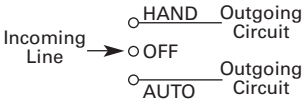

Step 2: "X-O" Pattern.
From the elementary diagram, you can construct an "X-O" diagram which describes when the contacts are to be closed (X) or open (O) in the various positions of the switch. The "X-O" for the **HAND** circuit looks like this:

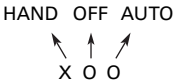

In this circuit, you want a contact closed on the left (HAND) but open in the center and right.

For the **AUTO** circuit, the "X-O" diagram would look like this:

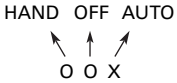

Putting them together, the complete "X-O" diagram is:

X O O
O O X

Once the "X-O" diagram has been generated, the next step is to select the cam and contact block, or blocks, needed to perform the desired "X-O" functions. The selection tables on the following pages list the various types (shapes) of cams by number to choose from and the type of contact and position to achieve the function outlined in your "X-O" diagram.

1

Step 3: Cam Selection.
The cam you select determines the operation of all contact blocks mounted to the operator. It is selected on the basis that it provides the simplest circuitry for the desired "X-O" diagram. The selection tables show all the "X-O" combinations. For the purpose of this example, the applicable portion of those tables is shown on this page.

Now to make the cam selection, make a simple worksheet such as:

	Cam 2	Cam 3
X O O	(A)NO-(B)NC	**(A)NO**
O O X	(B)NO	**(B)NO**

It becomes immediately obvious that cam 3 is the better choice for two reasons, (1) the series combination can be avoided making it simpler to wire, (2) only two contacts are required, which is less expensive than the three contacts required by cam 2.

Step 4: Contact Block Selection.
Having selected the cam, contact block selection is simply a matter of gathering the A position and B position circuits into pairs which make up the most convenient contact block arrangement. If there is an imbalance in the number of circuits under A or B, then single circuit blocks must be selected for these leftover circuits.

Back to the worksheet, having selected cam 3 do this:

X O X
O O X

Step 5: Selector Switch Operator.
Lastly, you have to choose from the many types of operators—knob and lever in various colors or keyed. Also what combinations of maintained and spring return functions are required. Selection of these operators can be found on **Page V7-T1-306**. For the example in step 4, you may want a three-position maintained black knob, cam 3—Catalog Number E34VHBK1.

The Complete Switch:
E34VHBK1 with one 10250T2 or, for one composite catalog number, E34VHBK1-Y1 found on **Page V7-T1-303.**

Diagrams
Circuits shown illustrate connections to obtain a selector switch circuit combination and are shown with their appropriate line diagrams. Field wiring of jumper connections required as shown.

X = Closed circuit
O = Open circuit

Wiring of Jumper Connections

Series Connection

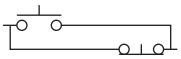

Parallel Connection

Four-position selector switches are limited to four contact blocks.

Contact Blocks
For selection and number of available contact blocks per operator, see **Page V7-T1-315**.

Example Selection Table

No.	"X-O" Pattern			Cam Code #2 Top A	Cam Code #2 Bottom B	Cam Code #3 Top A	Cam Code #3 Bottom B
1	X	O	O	① NO	NC	NO	—
4	O	O	X	—	NO	—	NO

Two-Position Selector Switch Contact Block Selection

No.	Desired Circuit and Operator Position		Contact Blocks Required to Accomplish Circuit Function: Top Plunger A		Bottom Plunger B
1	X	O	NC	or	NC
2	O	X	NO	or	NO

Note
① Wired in series.

Three-Position Switch—Cam and Contact Block Selection

No.	Desired Circuit and Operator Position			Contact Blocks Required to Accomplish Circuit Function (Jumpers must be installed where indicated) — Operator with Cam Code #2, Mounting Location: Top Plunger A	Operator with Cam Code #2, Mounting Location: Bottom Plunger B	Operator with Cam Code #3, Mounting Location: Top Plunger A	Operator with Cam Code #3, Mounting Location: Bottom Plunger B
1	X	0	0	NO	NC	NO	
2	X	X	0		NC		NC
3	X	0	X	NO		NO	NO
4	0	0	X		NO		NO
5	0	X	X	NC	NO	NC	
6	0	X	0	NC		NC	NC

Four-Position Switch—Contact Block Selection

No.	Desired Circuit and Operator Position				Contact Blocks Required to Accomplish Circuit Function — Mounting Location: Top Plunger A	Mounting Location: Bottom Plunger B
1	X	0	0	0	NC	
2	0	X	0	0		NO
3	0	0	X	0	NO	
4	0	0	0	X		NC
5	X	0	0	X	NC	NC
6	0	X	X	0	NO	NO
7	0	0	X	X	NO	NC
8	X	X	0	0	NC	NO
9	0	X	0	X		NO NC
10	X	0	X	0	NC NO	
11	X	X	X	0	NC NO	NO
12	0	X	X	X	NO	NC NO
13	X	0	X	X	NO NC	NC
14	X	X	0	X	NC	NO NC

1

Selector Switch Operators

UL (NEMA) Type 3, 3R, 4, 4X, 12, 13

Two-Position Knob Selector Switch

Operators with Knob Assembled

Positions	Operator Action ①	Black Knob Selector Switch—Vertical Mounting ② Cam Code ③	Catalog Number ④
Two-position—60° throw	M M	1	**E34VFBK1**
	M S	1	**E34VEBK1**
Three-position—60° throw	M M M	2	**E34VGBK1**
		3	**E34VHBK1**
	S M M	2	**E34VJBK1**
		3	**E34VKBK1**
	S M S	2	**E34VLBK1**
		3	**E34VMBK1**
	M M S	2	**E34VNBK1**
		3	**E34VPBK1**
Four-position—40° throw	M M M M	7	**E34VTBK1**

Key Operators

Three-Position Keyed Selector Switch

Key Operators with Cam and Cap

Positions	Operator Action ①	Cam Code ③	Key Removal Positions ⑤	Vertical Mounting Catalog Number	Horiz. Mounting Catalog Number
Two-position—60° throw	M M	1	1, 2, 3	**E34KFB_**	**E34KFHB_**
	M S	1	2	**E34KEB_**	**E34KEHB_**
Three-position—60° throw	M M M	2	1–7	**E34KGB_**	**E34KGHB_**
		3		**E34KHB_**	**E34KHHB_**
	S M M	2	1, 4, 5	**E34KJB_**	**E34KJHB_**
		3		**E34KKB_**	**E34KKHB_**
	S M S	2	4	**E34KLB_**	**E34KLHB_**
		3		**E34KMB_**	**E34KMHB_**
	M M S	2	2, 4, 6	**E34KNB_**	**E34KNHB_**
		3		**E34KPB_**	**E34KPHB_**
Four-position—40° throw	M M M M	7	7	**E34KTB_**	**E34KTHB_**

Notes

Use NEMA 4X 10250T operators where exposed to ultraviolet light, see **Pages V7-T1-213** to **V7-T1-283**.

① M = Maintained. S = Spring return in direction of arrow (R).

② Field convertible to horizontal mounting.

③ For selection of the proper cam and contact block to obtain the proper circuit sequence, see selection instructions and tables on **Pages V7-T1-303** to **V7-T1-305**.

④ For other colors of either the knob or lever, replace the underlined characters of the catalog number with the appropriate suffix code from Alternate Knob and Lever table on **Page V7-T1-307**. Example: E34VFB**L2**.

⑤ Choose key removal position required for application from table on **Page V7-T1-307**. Add key removal code number to listed catalog number. Example: E34KFB**2**.

Key Removal Positions ①

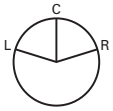

Code Suffix	Key Removal Position
1	Right only
2	Left only
3	Right and left
4	Center only
6	Left and center
7	All positions

Dissimilar Locks and Keys

Listed operators have identical locks and keys (Key Code H661), Catalog Number **10250ED824**. For dissimilar lock and key combinations, see **Page V7-T1-242**.

E34K_

E34L_

E34A_

Alternate Knobs and Levers for Operators ②

	Knob		Lever		Lever Designed for Added Ingress Protection ③	
Color	**Suffix Code**	**Catalog Number**	**Suffix Code**	**Catalog Number**	**Suffix Code**	**Catalog Number**
Black	**K1**	**E34K1**	**L1**	**E34L1**	**A1**	**E34A1**
Red	**K2**	**E34K2**	**L2**	**E34L2**	**A2**	**E34A2**
Green	**K3**	**E34K3**	**L3**	**E34L3**	**A3**	**E34A3**
Yellow	**K4**	**E34K4**	**L4**	**E34L4**	**A4**	**E34A4**
White	**K5**	**E34K5**	**L5**	**E34L5**	**A5**	**E34A5**
Blue	**K6**	**E34K6**	**L6**	**E34L6**	**A6**	**E34A6**
Gray	**K7**	**E34K7**	**L7**	**E34L7**	**A7**	**E34A7**
Orange	**K8**	**E34K8**	**L8**	**E34L8**	**A8**	**E34A8**

Notes

① Key removal in "spring return from" positions not recommended.
② See operators on **Page V7-T1-306**.
③ For use on maintained operators only.

1

Illuminated Selector Switch Operators

120 Vac Transformer Selector Switch, Cam 1

Operator without Knob or Lever

Positions	Operator Action	Transformer Type—50/60 Hz 6V #755 Lamp Catalog Number ③④		Full Voltage Type—AC or DC ① Lamps—#755, #757, #1835, 120MB ② Catalog Number ④	
Two-position—60° throw		**Cam Code 1** ⑤		**Cam Code 1** ⑤	
		E34VFB_		**E34SFB_**	
Three-position—60° throw	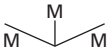	**Cam Code 2** ⑤	**Cam Code 3** ⑤	**Cam Code 2** ⑤	**Cam Code 3** ⑤
		E34VGB_	**E34VHB_**	**E34SGB_**	**E34SHB_**
	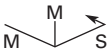	**E34VNB_** ⑥	**E34VPB_** ⑥	**E34SNB_** ⑦	**E34SPB_** ⑦
	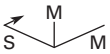	**E34VJB_** ⑥	**E34VKB_** ⑥	**E34SJB_** ⑦	**E34SKB_** ⑦
	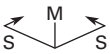	**E34VLB_**	**E34VMB_**	**E34SLB_**	**E34SMB_**
Four-position—40° throw	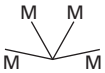	**E34VRB_**	—	**E34SRB_**	—

Knob

Lever

Knobs and Levers

Color ⑨	Knob Catalog Number and Code Number	Lever Catalog Number and Code Number
Red	**10250TER**	**10250TFR**
Green	**10250TEG**	**10250TFG**
Yellow	**10250TEA**	**10250TFA**
Blue	**10250TEL**	**10250TFL**
Clear	**10250TEC**	**10250TFC**
White	**10250TEW**	**10250TFW**
Amber	**10250TEM**	**10250TFM**

Light Unit Voltage Suffix

Add to operator Catalog Number listed in table above.

Type of Light Unit			
Transformer Type 50/60 Hz		Full Voltage Type AC or DC ①	
Voltage	Suffix Code	Voltage	Suffix Code
24	**024**	6	**06**
120	**120**	12	**12**
208	**208**	24	**24**
240	**240**	48	**48**
380	**380**	120	**120**
480	**480**	240 ⑧	**240**
600	**600**		

Notes

Use NEMA 4X 10250T operators where exposed to ultraviolet light, see **Pages V7-T1-213** to **V7-T1-283**.

① Full voltage light units can be used at other than listed voltages by changing lamp. Replacement lamps are listed on **Page V7-T1-269**.
② 120MB lamps are used on both 120V and 240V operators.
③ Operator includes lens gasket and lens attachment screws.
④ Add suffix code for light unit voltage to listed catalog number from Light Unit Voltage Suffix table above.
Example: For 24V transformer type light unit, order E34VFB**024**.
⑤ For selection of the proper cam and contact block required to obtain a specific circuit sequence, see selection tables on **Pages V7-T1-303** to **V7-T1-305**.
⑥ 120 and 240V transformer only.
⑦ 120 full voltage only.
⑧ Resistor type. May generate excess heat if used in high density.
⑨ Amber, clear and white lenses have a black arrow (R). Red, green and blue lenses have a white arrow (R).

Accessories

Accessories

	Description	Catalog Number
E34TA2	**Padlocking Attachment for Flush Pushbutton Operators.** Permits locking NC contacts in open position with 1/4 in padlock. Will not lock NO contact.	**E34TA2**
10250TA_	**Flexible Weather Resistant Boot** for use with flush pushbutton operators.	
	Clear	**10250TA46**
	Black	**10250TA47**
	Red	**10250TA48**
	Green	**10250TA49**
	Flexible Weather Resistant Boot for use with button operators (extended buttons preferred).	
	Black	**10250TA3**
	Red	**10250TA4** ①
	Green	**10250TA10**
	Clear	**10250TA85**
	Transparent Boot for regular, illuminated pushbutton operators and PresTest.	**10250TA25** ②
E34TA3_	**Special Retaining Nut**—to accommodate thick panel.	
	Indicating light	**E34TA30**
	PresTest, pushbuttons and selector switches	**E34TA31**
E34TA6	**Shroud for Mushroom Head Operator**—prevents accidental operation. (Not for push-pull operators.)	**E34TA6**
E34TA12	**Extended Retaining Nut**—replaces standard nut and provides guard for flush type pushbutton operators.	**E34TA12**
E34TA15	**Guard for illuminated pushbutton**	**E34TA15**
E34TA11	**Padlocking Attachment** for non-illuminated knob selector switches—accommodates up to five, 1/4 in padlocks.	**E34TA11**

Notes

① Should not be used on flush button for STOP function.

② Not suitable for single contact block depth cast enclosure. Cover is too thick.

1

Accessories, continued

	Description	Catalog Number
E34TK3	**Thrust Washer**—To meet Ford Motor Company mounting specifications.	**E34TK3**
10250TA7_	**Contact Block Terminal Jumps**—Available in multiples of 100 only.	
	Terminal to terminal—within block (short):	
	100 per package	**10250TA70**
	1000 per package	**10250TA70-2**
	Terminal to terminal—block to block (long):	
	100 per package	**10250TA71**
	1000 per package	**10250TA71-2**
10250TMT8	**Master Test (Dual Input) Module**—Internal Form C relay suitable for either AC or DC applications. Total electrical isolation between monitored and test circuit. Fits all illuminated 10250T, E22, E30 and E34 devices.	
	48 Vdc	**10250TMT8**
10250TFL_	**Flasher Module**—Internal Form C relay suitable for AC applications. One unit required for each operator in master test circuit.	
	24 Vac	**10250TFL2**
	120 Vac	**10250TFL1**
E22CW	**Panel Mounting Nut Wrench**—E22, E30, E34 and octagonal 10250T.	**E22CW**
10250TA101 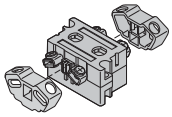	**Fingerproof Shroud**—10 per package Fits new style contact blocks and light units.	**10250TA101**

Options

Legend Plates ①

Field Color

Legend plates can be supplied printed on black, red, silver or white field. To order legend printed on a color other than indicated—add suffix code to the end of the catalog number as follows:

"R" for Red field;
"W" for White field; or
"S" for Silver field.

Example: E34SP26**R**—Standard plate with red field marked OPEN.

Standard

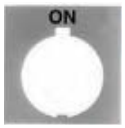

Jumbo

For Pushbutton Operators and Indicating Lights

Legend	Color of Field	Standard ② Catalog Number	Jumbo Catalog Number	Legend	Color of Field	Standard ② Catalog Number	Jumbo Catalog Number
Letters on Legend Plates Below are 3/16 in High							
CLAMP	Black	**E34SP90**	**E34LP90**	OFF	Red	**E34SP24**	**E34LP24**
CLOSE		**E34SP73**	**E34LP73**	ON	Black	**E34SP25**	**E34LP25**
DOWN		**E34SP74**	**E34LP74**	OPEN		**E34SP26**	**E34LP26**
EMERG. STOP	Red	**E34SP13**	**E34LP13**	OUT		**E34SP27**	**E34LP27**
FAST	Black	**E34SP75**	**E34LP75**	POWER ON		**E34SP80**	**E34LP80**
FASTER		**E34SP87**	**E34LP87**	RAISE		**E34SP28**	**E34LP28**
FEEDER ON		**E34SP94**	**E34LP94**	READY		**E34SP86**	**E34LP86**
FEEDER OFF		**E34SP95**	**E34LP95**	RESET		**E34SP29**	**E34LP29**
FORWARD		**E34SP15**	**E34LP15**	REVERSE		**E34SP30**	**E34LP30**
HIGH		**E34SP16**	**E34LP16**	RUN		**E34SP31**	**E34LP31**
IN		**E34SP17**	**E34LP17**	SAFE		**E34SP85**	**E34LP85**
INCH		**E34SP18**	**E34LP18**	SLOW		**E34SP32**	**E34LP32**
JOG		**E34SP19**	**E34LP19**	SLOWER		**E34SP88**	**E34LP88**
JOG FOR.		**E34SP20**	**E34LP20**	START		**E34SP33**	**E34LP33**
JOG REV.		**E34SP21**	**E34LP21**	STOP	Red	**E34SP34**	**E34LP34**
LOW		**E34SP22**	**E34LP22**	TEST	Black	**E34SP83**	**E34LP83**
LOWER		**E34SP23**	**E34LP23**	TRANSFER		**E34SP93**	**E34LP93**
LUBE-FAIL		**E34SP92**	**E34LP92**	TRIP		**E34SP84**	**E34LP84**
MOTOR RUN		**E34SP81**	**E34LP81**	UNCLAMP		**E34SP91**	**E34LP91**
MOTOR STOP		**E34SP82**	**E34LP82**	UP		**E34SP35**	**E34LP35**

Blank Plastic Legend Plates—Square ③

Color Lettering	Field Side 1	Side 2	Standard Catalog Number	Jumbo Catalog Number	Extra Large Catalog Number
Black	White	Silver	**10250TSP76**	**10250TLP76**	**10250TEP76**
White	Red	Black	**10250TSP77**	**10250TLP77**	**10250TEP77**

Notes

① For dimensions, see **Page V7-T1-288**.
② 3/32 in high lettering.
③ Legend plates with non-standard markings or aluminum legend plates see 10250T listing on **Page V7-T1-262**.

1

Standard

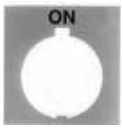

Jumbo

For Selector Switch Operators

Legend	Color of Field	Standard Catalog Number	Jumbo Catalog Number
Two-Position—3/16 in High Lettering			
FOR. REV.	Black	**E34SP38**	**E34LP38**
HAND AUTO		**E34SP39**	**E34LP39**
HIGH LOW		**E34SP40**	**E34LP40**
JOG RUN		**E34SP41**	**E34LP41**
MAN. AUTO		**E34SP67**	**E34LP67**
OFF ON		**E34SP42**	**E34LP42**
OPEN CLOSE		**E34SP43**	**E34LP43**
RUN JOG		**E34SP44**	**E34LP44**
SAFE RUN		**E34SP45**	**E34LP45**
START JOG		**E34SP46**	**E34LP46**
START STOP		**E34SP47**	**E34LP47**
UP DOWN		**E34SP48**	**E34LP48**

Legend	Color of Field	Standard Catalog Number	Jumbo Catalog Number
Three-Position—3/16 in High Lettering			
AUTO OFF HAND	Black	**E34SP49**	**E34LP49**
FOR. OFF REV.		**E34SP50**	**E34LP50**
FOR. SAFE REV.		**E34SP69**	**E34LP69**
HAND OFF AUTO		**E34SP51**	**E34LP51**
MAN. OFF AUTO		**E34SP68**	**E34LP68**
OPEN OFF CLOSE		**E34SP53**	**E34LP53**
RUN SAFE JOG		**E34SP70**	**E34LP70**
UP OFF DOWN		**E34SP54**	**E34LP54**
ON STOP SAFE		**E34SP71**	**E34LP71**

For Push-Pull Units

Legend	Color of Field	Standard ① Catalog Number	Jumbo ② Catalog Number
PULL ON/PUSH OFF	Black	**E34PP5**	**E34R5**
PULL OPEN/PUSH CLOSE	Black	**E34PP8**	**E34R8**
PULL UP/PUSH DOWN	Black	**E34PP11**	**E34R11**

Notes

① 3/32 in (2.4 mm) high lettering.
② 1/8 in (3.2 mm) high lettering.

Enclosures

Die Cast, Polyester and Stainless Steel Enclosures

Die Cast Enclosure

Polyester Enclosure

Stainless Steel Enclosure

Enclosures (Case and Cover)—Surface Mounting ①

Number of Elements	One Contact Block Depth Catalog Number	Two Contact Block Depth Catalog Number
Die Cast Enclosure—In-Line ②③ NEMA 4, 4X, 12, 13		
1	**E34N1**	**E34N11**
2	**E34N2**	**E34N12**
3	**E34N3**	**E34N13**
4	—	**E34N14**
Polyester—In-Line NEMA 3, 4X, 12		
1	—	**E34N51**
2	—	**E34N52**
3	—	**E34N53**
4	—	**E34N54**
Stainless Steel ④—In-Line NEMA 4, 4X, 12		
1	—	**10250TN33**
2	—	**10250TN34**
3	—	**10250TN35**
4	—	**10250TN36**

Dimensions, see **Page V7-T1-322**.

Mounting Instructions

These E34 Die Cast Enclosures feature a corrosion resistant coating identical to finish on the E34 operators except gray in color. Not for use in ultraviolet light applications.

One and Two Contact Block Depth Enclosures

One Contact Block Depth Enclosure

Two Contact Block Depth Enclosure

Enclosure Layouts

Top – For Vertical Mounting

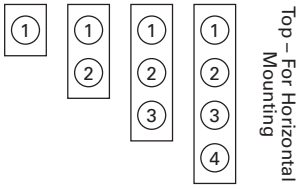

Top – For Horizontal Mounting

Notes

① For spacing increments, see **Page V7-T1-314**.
② All die cast enclosures can be converted to base mounting of contact blocks with spacers 10250TA22 or 10250TA23. See listing on **Page V7-T1-257.**
③ When used with E30 pushbuttons, only the one element enclosure can be used.
④ 14 gauge, type 304.

1

Die Cast and Stainless Steel—Flush Mount, Covers Only ①

Flush Mounting Covers

Covers Only—Flush Mounting

Number of Elements	Catalog Number	Catalog Number
Flush Die Cast Covers		
	In-Line Deep Cover	**In-Line Flat Cover**
1	**E34F11**	**E34F1**
2	**E34F12**	**E34F2**
3	**E34F13**	**E34F3**
4	**E34F14**	**E34F4**
In-Line Stainless Steel Flush Plates ②		
	With Pullbox	**Without Pullbox**
1	**10250TS10**	**10250TS1**
2	**10250TS11**	**10250TS2**
3	**10250TS12**	**10250TS3**
4	**10250TS14**	**10250TS4**
Dimensions, see **Page V7-T1-323**.		

Spacing Increments

Approximate Dimensions in Inches (mm)

Type	F	G	H
Die cast	2.44 (62.0)	2.5 (63.5)	1.88 (47.8)
Polyester	1.88 (47.8)	Min. 2.13 (54.1)	2.25 (57.2)
Stainless steel	1.69 (42.9)	Min. 1.73 (43.9)	2.25 (57.2)

Spacing Increments for Enclosures

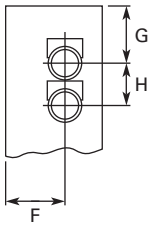

Enclosure Layouts

Top – For Vertical Mounting

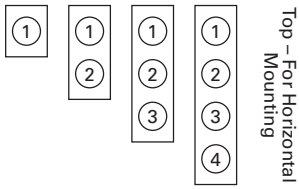

Notes

① These E34 die cast covers feature a corrosion resistant coating identical to the finish on the E34 operators except gray in color.

② Not oiltight. NEMA 1 applications only.

Contact Blocks

Standard Contact Blocks

- UL A600/P600 rated
- Color-coded plungers—red/green for NC/NO circuits
- Silver contact tips with "reliability nibs"
- Black (opaque) or amber (translucent) housings
- Pressure plate or spade terminals
- Fingerproof shrouds (for pressure terminals only)

Logic Level Contact Blocks

- UL A600/P600 rated
- Black plungers
- Inert palladium knife-blade contacts
- Black (opaque) housings
- Pressure plate or spade terminals
- Fingerproof shrouds not available

Special Function Contact Blocks

- UL A600/P600 rated
- Black plungers
- Silver contact tips with "reliability nibs"
- Black (opaque) housings
- Pressure plate terminals only
- Fingerproof shrouds not available

Special Purpose Contact Block

- Maximum 300V rated
- Black plungers
- Silver contact tips with "reliability nibs"
- Black (opaque) housings
- Pressure plate terminals only
- Fingerproof shrouds not available

Reliability Nibs

Reliability nibs are the hallmark of Eaton's contact blocks. A pointed silver nib on the contact tip ensures reliable switching from logic level (5V) up to 600V applications. Therefore standard contact blocks can be used for most logic level applications where the contacts are not exposed to any harsh environmental conditions.

Palladium Contacts

Palladium, which is more inert than gold, is well suited for voltages and currents approaching zero and is recommended for applications where environmental conditions are a factor.

Maximum Contact Block Mounting per Operator Type

Operator	Max. Stack
Pushbuttons	6
Push-pull operators	2
Roto-push operators	4
Two- or three-position selector switches	6
Four-position selector switches	4
Joysticks	4

1

10250T1

Contact Blocks

Symbol	Circuit	Description ①	Standard Pressure Terminal Catalog Number	Standard Spade Terminal ② Catalog Number	Logic Level Pressure Terminal Catalog Number	Logic Level Spade Terminal ② Catalog Number
Blank No Plunger	1NC	Stack up to six blocks (six circuits) unless otherwise noted.	**10250T51**	**10250T59**	**10250T51E**	**10250T59E**
Blank No Plunger	1NO	Stack up to six blocks six circuits) unless otherwise noted.	**10250T53**	**10250T60**	**10250T53E**	**10250T60E**
	NO-NC	Stack up to six blocks (12 circuits) unless otherwise noted.	**10250T1**	**10250T40**	**10250T1E**	**10250T40E**
	2NC	Stack up to six blocks (12 circuits) unless otherwise noted.	**10250T3**	**10250T42**	**10250T3E**	**10250T42E**
	2NO	Stack up to six blocks (12 circuits) unless otherwise noted.	**10250T2**	**10250T41**	**10250T2E**	**10250T41E**
Special Function Blocks ③						
Blank No Plunger	LONC	Late opening NC. Stack up to six blocks (six circuits) unless otherwise noted.	**10250T71 ③**	—	**10250T71E ③**	—
	ECNO-NC	Early closing NO and standard NC. Stack up to six blocks unless otherwise noted.	**10250T47 ③④**	—	**10250T47E ③**	—
	ECNO-NO	Early closing NO and standard NO. Stack up to four blocks unless otherwise noted.	**10250T57 ③④**	—	**10250T57E ③**	—
	2LONC	Two late opening NC contacts. Stack up to six blocks unless otherwise noted.	**10250T45 ③**	—	**10250T45E ③**	—
	LONC-ECNO	Overlapping contacts. Stack up to four blocks unless otherwise noted.	**10250T55 ③④**	—	**10250T55E ③**	—
Special Purpose Blocks ⑤						
	2NO-2NC	Four circuits in single block depth. Rated 300V max. Stack up to four blocks unless otherwise noted.	**10250T44 ⑤**	—		

Notes

① All 10250T contact blocks shown are suitable for use on standard 10250T and E34 operators. These contact blocks are not suitable for Class I Division 2 type 10250T or E34 devices.

② Contact blocks with spade terminals are limited to a maximum of one contact block per operator and minimum spacing between devices is 2.5 in (63.5 mm). Not suitable for use in 10250T or E34 enclosures. Also available in amber housing. Not available with fingerproof shrouds.

③ Special function contact blocks are not suitable for use with roto-push operators, three-position push-pull operators, or four-position selector switches.

④ ECNO contact blocks are not suitable for use with two-position joysticks or when operators are used with padlock attachments.

⑤ Special purpose 10250T44 contact blocks are not suitable on selector switches or roto-push operators. Okay to use with three-position push-pull operators only on low voltage (30V or less) circuits.

10250T1CP

Contact Blocks with Fingerproof Shrouds

Symbol	Circuit	Description ①	Standard Pressure Terminal ② Catalog Number	Logic Level Pressure Terminal ② Catalog Number
Blank No Plunger	1NC	Stack up to six blocks (six circuits) unless otherwise noted.	**10250T51P**	**10250T51EP**
Blank No Plunger	1NO	Stack up to six blocks (six circuits) unless otherwise noted.	**10250T53P**	**10250T53EP**
	NO-NC	Stack up to six blocks (12 circuits) unless otherwise noted.	**10250T1P**	**10250T1EP**
	2NC	Stack up to six blocks (12 circuits) unless otherwise noted.	**10250T3P**	**10250T3EP**
	2NO	Stack up to six blocks (12 circuits) unless otherwise noted.	**10250T2P**	**10250T2EP**
Special Function Blocks ③				
Blank No Plunger	LONC	Late opening NC. Stack up to six blocks (six circuits) unless otherwise noted.	**10250T71P ④**	**10250T71EP ④**
	ECNO-NC	Early closing NO and standard NC. Stack up to six blocks unless otherwise noted.	**10250T47P ③④**	**10250T47EP ④**
	ECNO-NO	Early closing NO and standard NO. Stack up to four blocks unless otherwise noted.	**10250T57P ③④**	**10250T57EP ④**
	2LONC	Two late opening NC contacts. Stack up to six blocks unless otherwise noted.	**10250T45P ④**	**10250T45EP ④**
	LONC-ECNO	Overlapping contacts. Stack up to four blocks unless otherwise noted.	**10250T55P ③④**	**10250T55EP ④**

Replacement Parts

Replacement Lamps—For E34 Illuminated Operators

Mfg. Lamp Type	Voltage	Base Style	Application	Part Number
120MB	120V	T 3-1/4 bayonet	10250T resistor indicating light	**28-3044**
#267	6.3V	T 3-1/4 bayonet	10250T flasher	**10250ED986-4**
#755	6.3V	T 3-1/4 bayonet	10250T transformer, PresTest and full voltage	**28-2202**
#756	12V	T 3-1/4 bayonet	10250T full voltage	**28-5184**
#757	24V	T 3-1/4 bayonet	10250T full voltage	**28-5185**
#1828	32V	T 3-1/4 bayonet	10250T full voltage	**28-5186**
#1835	55V	T 3-1/4 bayonet	10250T resistor	**28-5187**
NE48	120V	T 4-1/2 bayonet	10250T neon	**28-494**
NE51H-R22	120V	T 3-1/4 bayonet	10250T neon	**28-3754**
NE51H-R68	240V	T 3-1/4 bayonet	10250T neon	**28-3755**

Notes

① All 10250T contact blocks shown are suitable for use on standard 10250T and E34 operators. These contact blocks are not suitable for Class I Division 2 type 10250T or E34 devices.

② To order contact blocks with translucent amber housing, change suffix P to **CP** in catalog number, e.g., 10250T51**CP**.

③ ECNO contact blocks are not suitable for use with two-position joysticks or when operators are used with padlock attachments.

④ Special function contact blocks are not suitable for use with roto-push operators, three-position push-pull operators, or four-position selector switches.

Flush Head Pushbutton Operator

Mushroom Head Pushbutton Operator

Jumbo Mushroom Head Operator

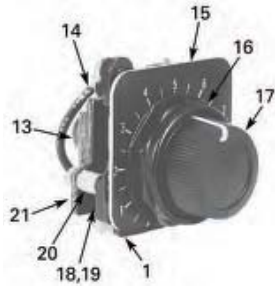

Potentiometers

Illuminated Pushbutton Operator

Transformer Type Indicating Light

Knob-Operated Selector Switch Operator

Full Voltage, Resistor and Transformer Type Illuminated Selector Switch

E34 Style Operator Replacement Parts

Item No.	Description	No. Req.	Part Number
1	Gasket	1	**16-1548**
2	Mounting nut	1	**15-1530-4**
3	Set screw (#6-32 x 0.250 in long hollow hex)	2	**11-2014**
4	Mushroom head button (includes [2] item 5)	1	**As Req. Below**
	Black	—	**53-1317**
	Red	—	**53-1317-2**
	Yellow	—	**53-1317-3**
	Green	—	**53-1317-4**
	Blue	—	**53-1317-22**
5	Set screw (#10-32 x 0.250 in long hollow hex)	2	**11-544**
6	Jumbo mushroom head button (aluminum—includes [2] item 5)	1	**As Req. Below**
	Red	—	**53-1317-9**
	Black	—	**53-1317-10**
	Yellow	—	**53-1317-11**
	Green	—	**53-1317-12**
7	Jumbo mushroom head button (aluminum—red EMERG. STOP) does not include item 5	1	**53-1349-18**
8	Mounting screw (#6-32 x 0.710 in long)	2	**10250TA79**
	Washer	2	**16-2038**
9	Terminal screw and lug (captive)	Req.	**80-5502**
10	Gasket (supplied with basic unit)	1	**32-803**
11	Round head screw (#4-40 x 0.344 in long) (supplied with basic unit)	2	**11-4553**

Item No.	Description	No. Req.	Part Number
12	Mounting screw	2	**11-1632**
13	Simple potentiometer (does not include items 18, 28 or 29)	1	**As Req. Below**
	1,000 ohms	—	**41-782-2**
	2,500 ohms	—	**41-782-3**
	5,000 ohms	—	**41-782-10**
	10,000 ohms	—	**41-782-4**
	25,000 ohms	—	**41-782-5**
	50,000 ohms	—	**41-782-6**
14	Connector (includes screw and lug)	2	**25-1851**
15	Indicating plate	1	**As Req. Above**
	Standard size (without legend)	—	**30-4460**
	Large size (specify legend)	—	**10250TR30**
16	Retaining nut	1	**15-1547-3**
17	Knob	1	**53-1314**
	Socket set screw (#6-32 x 0.250 in long)	1	**11-2014**
18	Coupling	1	**11-2014**
			29-3749-2
19	Set screw (#6-32 x 0.188 in long)	1	**11-1199**
20	Spacer	2	**56-1066-18**
21	Connector (includes screw and lug)	1	**25-1851-2**
22	Mounting nut	1	**15-1938-2**

Technical Data and Specifications

Mechanical Ratings

Description	Specification
Frequency of Operation	
All pushbuttons	6000 operations/hr.
Key and lever selector switches	3000 operations/hr.
Auto-latch devices	1200 operations/hr.
Life	
Pushbuttons	10 x 10^6 operations
Contact blocks	10 x 10^6 operations
PresTest units	10 x 10^6 operations
Lever and key selector switches	0.25 x 10^6 operations
Twist to release pushbuttons	0.3 x 10^6 operations
Shock Resistance	
Duration	210 ms ≥5g

General Specifications

Description	Specification
Climate Conditions	
Operating temperature	1° to 150°F (–17° to 66°C)
Storage temperature	–40° to 176°F (–40° to 80°C)
Altitude	6,562 ft (2,000m)
Humidity	Max. 95% RH at 60°C
Terminals	
Marking	NC-NO on the contact block to meet the NEMA requirements. Dual marking system 1–2 for normally closed, 3–4 for normally open to meet BS5472 (Cenelec EN50 005).
Clamps	Terminals are saddle clamp type for 1 x 22 AWG (0.34 mm^2) to 2 x 14 AWG (2.5 mm^2) conductors
Torque	7 lb-in (0.8 Nm)
Degree of protection against direct electrical contact	IP2X with fingerproof shroud
Light Units	
Transformers	Will withstand short-circuit for 1 hour per IEC 60947-5-1
Bulbs—average life:	
Transformer type	20,000 hrs.
Resistor/direct voltage type	2500 hrs. minimum at rated V
LED	60,000 to 100,000 hrs.

Electrical Ratings

Description	Specification
Insulation	U_i = 660 Vac or Vdc
Thermal	I_{th} = 10A
Short Circuit Coordination to IEC/EN 60947-5-1	
Rated conditional short circuit current	1 kA
Fuse type 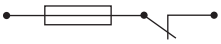	GE power controls TIA 10, red spot type gG, 10A, 660 Vac, 460 Vdc, BS88-2, IEC 60269-2-1
UL rating	A600, P600
AC load life duty cycle 1200 operations/hour	
10A	110V pf 0.4—1 x 10^6 operations
5A	250V pf 0.4—1 x 10^6 operations
2A	600V pf 0.4—1 x 10^6 operations
Switching capacity	
AC 15 rated make/break (11 x I_e at 1.1 x U_e)	
6A	120V pf 0.3
4A	240V pf 0.3
2A	660V pf 0.3
DC13 rated make/break (1.1 x I_e at 1.1 x U_e)	
1.0A	125V L/R ≥0.95 at 300 ms
0.55A	250V L/R ≥0.95 at 300 ms
0.1A	660V L/R ≥0.95 at 300 ms
10A	110V pure resistive
Maximum ratings for logic level and hostile atmosphere application	
Maximum amperes	0.5A
Maximum volts	120 Vac/Vdc
Low voltage switching	Conical shaped points or "reliability nibs" improve performance in dry circuit, corrosive, fine dust and other contaminated atmospheres. Under normal environmental conditions, the minimum operational voltage is 5V and the minimum operational current is 1 mA, Vac/Vdc.
Contact operation	Slow make and break. All normally closed contacts have positive opening operation, i.e., normally closed contacts are forced open in the event of contact weld or spring breakage.

Electrical Ratings—Contact Block

Meet or Exceed NEMA Rating Designations A600, A300 and B300 for AC and P600 for DC

	50 Vac or 60 H				Vdc		
Description	**120**	**240**	**480**	**600**	**24/28**	**125**	**250**
Meet or Exceed NEMA Rating Designations A600, A300 and B300 for AC and P600 for DC							
Make and emerg. interrupting capacity (amp)	60	30	15	12	5.7	1.1	0.55
Normal load break (amp)	6	3	1.5	1.2	5.7	1.1	0.55
Thermal current (amp)	10	10	10	10	5.0	5.0	5.0
Voltamperes:							
Make and emerg. interrupting capacity	7200	7200	7200	7200	138	138	138
Normal load break	720	720	720	720	138	138	138

Mounting Options

Panel Thickness

- Minimum: 0.06 in (1.6 mm)
- Maximum: 0.25 in (8 mm) including legend plate
- Maximum can be increased to 0.375 in (15.9 mm) using optional retaining nut
  - Indicating light: 10250TA30
  - Pushbutton/selector switch: 10250TA31

Mounting Matrix

Legend Plate	Dimensions in Inches (mm) A	B	C	D
Small	1.63 (41.3)	2.25 (57.2)	2.25 (57.2)	1.63 (41.3)
Medium	1.75 (44.5)	2.25 (57.2)	2.25 (57.2)	1.75 (44.5)
Large	2.25 (57.2)	2.25 (57.2)	2.25 (57.2)	2.25 (57.2)

Mounting Options in Inches (mm)

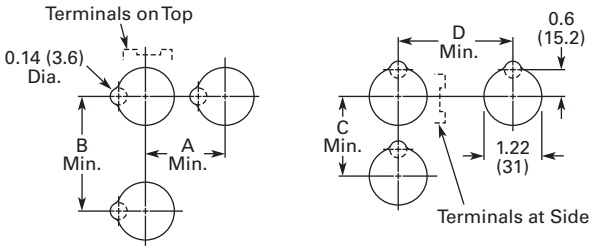

Horizontal Mounting **Vertical Mounting**

Horizontal mounting means terminals are located top and bottom of contact block.
Vertical mounting means terminals are left and right of contact block.
This allows close spacing of adjacent operators with easy access to terminals.

Locating nib hole or notch is 0.14 in (3.6 mm) #29 drill.

Drilling Dimensions in Inches (mm)

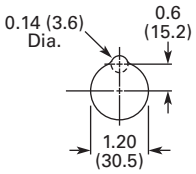

1

Dimensions

Approximate Dimensions in Inches (mm)

Potentiometer

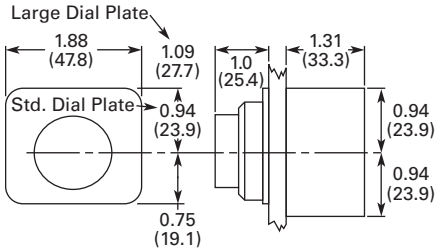

Legend Plates

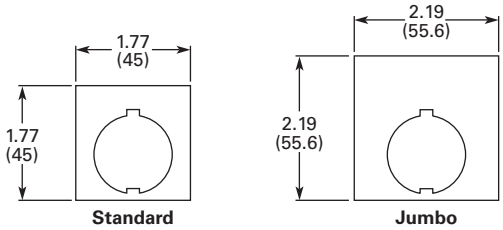

Surface Mounting

Die Cast, Polyester and Stainless Steel Enclosures

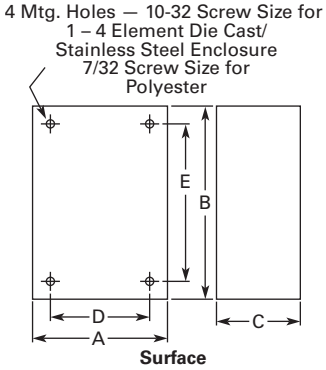

Number of Elements	Element Arrangement	Wide A	High B	Deep C	Mounting D	E	Conduit Entrance
Die Cast							
1	In-line	3.88 (98.6)	4.00 (101.6)	3.00 (76.3) ①	2.69 (68.3)	3.25 (82.6)	3/4
2		3.88 (98.6)	5.88 (149.4)	3.00 (76.3) ①	2.69 (68.3)	5.13 (130.3)	
3		3.88 (98.6)	7.75 (196.9)	3.00 (76.3) ①	2.69 (68.3)	7.00 (177.8)	1
4		3.88 (98.6)	9.63 (244.6)	3.00 (76.3) ①	2.69 (68.3)	8.88 (225.6)	
Polyester							
1	In-line	3.81 (96.8)	6.63 (168.4)	3.38 (85.9)	2.94 (74.7)	4.88 (124.0)	②
2		3.81 (96.8)	6.63 (168.4)	3.38 (85.9)	2.94 (74.7)	4.88 (124.0)	
3		3.81 (96.8)	8.88 (225.6)	3.38 (85.9)	2.94 (74.7)	7.13 (181.1)	
4		3.81 (96.8)	11.13 (282.7)	3.38 (85.9)	2.94 (74.7)	9.38 (238.3)	
Stainless Steel							
1	In-line	3.00 (76.2)	3.50 (88.9)	3.00 (76.2)	1.50 (38.1)	4.25 (108.0)	②
2		3.50 (88.9)	6.75 (171.5)	3.00 (76.2)	1.50 (38.1)	7.50 (190.5)	
3		3.50 (88.9)	9.00 (228.6)	3.00 (76.2)	1.50 (38.1)	9.00 (228.6)	
4		3.50 (88.9)	11.25 (285.8)	3.00 (76.2)	1.50 (38.1)	12.00 (304.8)	

Notes

① Depth given is for two contact block deep stations. One contact block deep stations subtract 3/4 in (19.1 mm).

② No conduit entrance holes provided. Drill as required.

Approximate Dimensions in Inches (mm)

Flush Mounting

Die Cast and Stainless Steel Covers Only

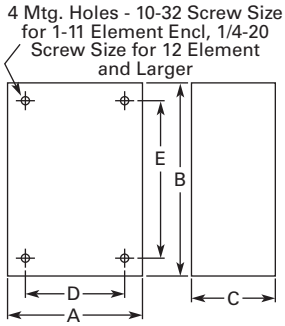

Surface or Pendant

Number of Elements	Wide A	High B	Deep C	Mounting D	E
Die Cast					
1	3.88 (98.6)	4.00 (101.6)	0.25 (6.4) ①	3.50 (88.9)	3.63 (92.2)
2	3.88 (98.6)	5.88 (149.4)	0.25 (6.4) ①	3.50 (88.9)	5.50 (139.7)
3	3.88 (98.6)	7.75 (196.9)	0.25 (6.4) ①	3.50 (88.9)	6.00 (152.4)
4	3.88 (98.6)	9.63 (244.6)	0.25 (6.4) ①	3.50 (88.9)	9.25 (235.0)
Stainless Steel					
1	5.00 (127.0)	5.00 (127.0)	2.50 (63.5) ②	3.25 (82.6)	1.88 (47.8)
2	5.00 (127.0)	6.88 (174.8)	2.50 (63.5) ②	3.25 (82.6)	3.63 (92.2)
3	5.00 (127.0)	8.63 (219.2)	2.50 (63.5) ②	3.25 (82.6)	5.50 (139.7)
4	5.00 (127.0)	10.50 (266.7)	2.50 (63.5) ②	3.25 (82.6)	7.25 (184.2)

Notes

① Depth given is for flat cover. Deep cover is 3/4 in (19.1 mm) deeper.

② Depth given includes pull box.

Approximate Dimensions in Inches (mm)

Padlocking Attachment for Flush Pushbutton Operators

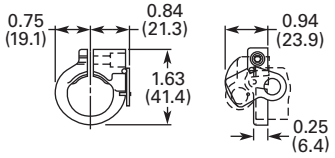

Flexible Weather Resistant Boot

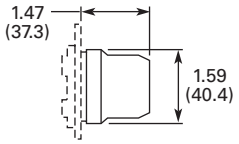

Transparent Boot

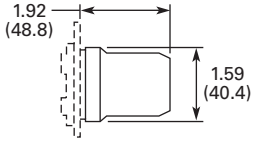

Shroud for Mushroom Head Operator

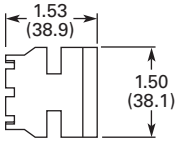

Extended Retaining Nut

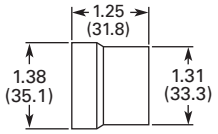

Guard for Illuminated Pushbutton

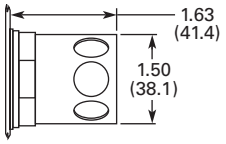

Contact Block Terminal Jumps

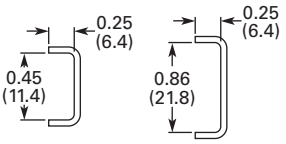

Master Test Module and Flasher Module

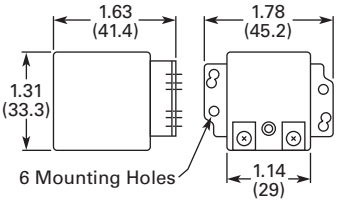

Flush Pushbutton

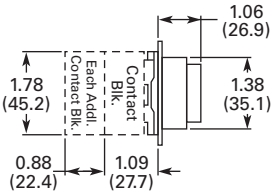

Extended Pushbutton

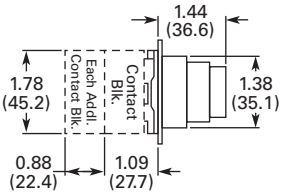

Half Shroud Pushbutton

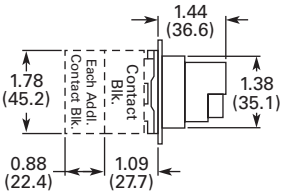

Approximate Dimensions in Inches (mm)

Mushroom Pushbutton

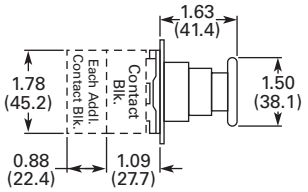

Jumbo Mushroom Pushbutton

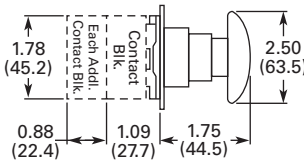

Push-Pull Switch

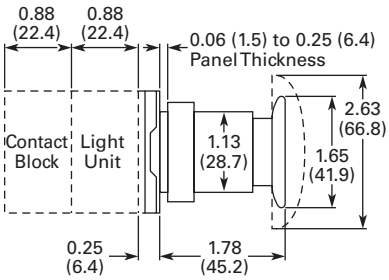

Indicating Light

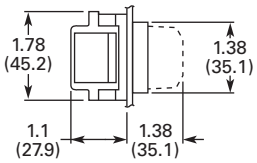

PresTest Indicating Light

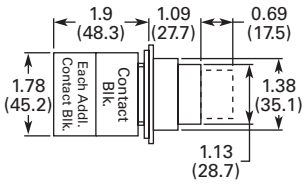

Illuminated Pushbutton

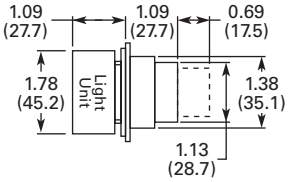

Selector Switch

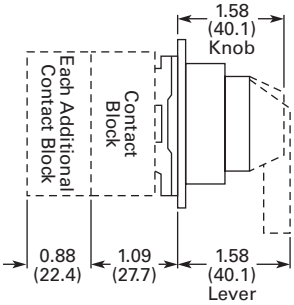

Key Selector Switch

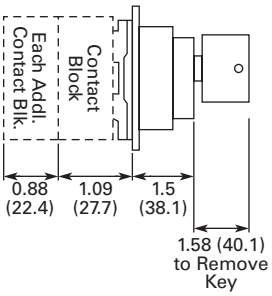

Illuminated Selector Switch

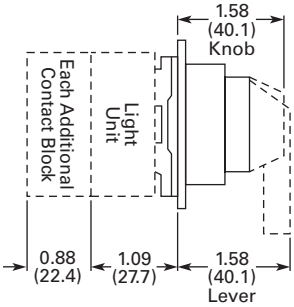

30.5 mm Watertight/Oiltight—HT800

Contents

Description	*Page*
30.5 mm Watertight/Oiltight—HT800	
Catalog Number Selection	**V7-T1-327**
Product Selection	
Momentary Pushbutton Units, Non-Illuminated	**V7-T1-328**
Illuminated Pushbutton Units	**V7-T1-330**
Guarded Illuminated Pushbutton Units	**V7-T1-332**
Indicating Light Units	**V7-T1-334**
Push-Pull Units	**V7-T1-336**
Illuminated Push-Pull Units	**V7-T1-337**
Selector Switch Units	**V7-T1-338**
Selector Switch Contact Block Selection	**V7-T1-340**
Accessories	**V7-T1-341**
Options	**V7-T1-342**
Replacement Parts	**V7-T1-345**
Technical Data and Specifications	**V7-T1-346**
Dimensions	**V7-T1-347**

Product Description

The HT800 Series from Eaton's Electrical Sector is a family of 30.5 mm pushbutton devices which includes momentary, illuminated and mushroom head pushbuttons, selector switches, indicating lights and push-pull switches. The HT800 devices have a familiar appearance found in most industrial applications and are suitable for replacement of several other manufacturers' 30.5 mm pushbutton devices.

Features

- Anodized aluminum mounting rings
- Watertight double V-gasket seals
- Extended height bulbs
- Transparent housing contact blocks
- Color-coded contact blocks
- Gold-plated contacts (on low voltage contact block)
- Reliability ridge on movable contact
- Stackable screw-mounted contact blocks
- Contact blocks can be mounted in left/right or top/bottom positions
- Standard NC contact opens before NO contact closes (break before make operation)
- Bright and long lasting LED indicating lights in six colors
- Field convertible maintained selector switches—from two- to three-position and vice versa
- Field selectable knob/lever mounting positions—at any 22.5° increment

Benefits

- Corrosion resistant NEMA 4X finish
- Watertight and oiltight NEMA 4, 13 ingress protection
- Increased side illumination of indicating lights and illuminated pushbuttons
- Easy visual inspection of contact conditions
- Easily identifiable NO (white) or NC (black) contact blocks
- Gold-plated contacts suitable for logic level circuits
- Reliability ridge penetrates contamination buildup on stationary contacts
- Left/right or top/bottom mounted contact blocks allow correct positioning in retrofit applications
- All-purpose selector switches are convertible and can rotate in 22.5° increments to suit panel layouts

Standards and Certifications

- UL508 per File No. E131568
- CSA C22.2 No. 14 per File No. LR68551

Ingress Protection

- UL (NEMA) Type 1, 2, 3, 3R, 4, 4X, 12 and 13 when mounted in similarly rated enclosures

Catalog Number Selection

Catalog Number Selection is for illustrative purposes only and not to be used to create new catalog numbers.

HT800 Pushbuttons, Push-Pulls and Indicating Lights

HT8 GB R AB T1

Style
Pushbuttons
AA = Flush
AB = Extended
AE = Mushroom head
Illuminated Pushbuttons
GB = Illuminated PB
Push-Pull Operators
CB = Two-position, maintained
Indicating Lights
HF = Full voltage/resistor type
HB = Transformer type
Push-to-Test Operators
GT = All types

Button Color
G = Green
H = Black
R = Red

Lens Color
A = Amber/Orange
B = Blue
C = Clear
G = Green
R = Red
W = White
Y = Yellow

Contact Block Location (viewed from rear) ①	
Left Side	**Right Side**
A = NO	**A5** = NO
A2 = 2NO	**A6** = 2NO
B1 = NC	**B** = NC
B2 = 2NC	**B6** = 2NC
C = NOEM	**C5** = NOEM
C2 = 2 NOEM	**C6** = 2 NOEM
D1 = NCLB	**D** = NCLB
D2 = 2NCLB	**D6** = 2NCLB
E1 = NOEM-NCLB	**E5** = NOEM-NCLB
F1 = NO and NC	**Q1** = NO and NC
F4 = 1NO-1NC	

Light Unit Type/Voltage
F3 = 24V FV, LED
F7 = 120V FV, LED
L1 = 120V transformer, LED
T1 = 120V transformer, incandescent
V3 = 24V FV, incandescent
V7 = 120V res., incandescent

HT800 Selector Switch

HT8 JA H 3A F1Q1

Operator
JA = Two-pos., knob, maint.
JB = Three-pos., knob, maint.
JC = Four-pos., knob, maint.
JD = Two-pos., lever, maint.
JE = Three-pos., lever, maint.
JF = Four-pos., lever, maint.
JK = Two-pos., knob, spr. rtn., left
JL = Two-pos., lever, spr. rtn., left
JN = Two-pos., knob, spr. rtn., right
JP = Two-pos., lever, spr. rtn., right
JR = Three-pos., knob, spr. rtn., left
JS = Three-pos., lever, spr. rtn., left
JU = Three-pos., knob, spr. rtn., right
JV = Three-pos., lever, spr. rtn., right
JX = Three-pos., knob, spr. rtn., both
JY = Three-pos., lever, spr. rtn., both
LN = Four-pos., knob, spr. rtn., pos 1 to 2
LP = Four-pos., lever, spr. rtn., pos 1 to 2
LR = Four-pos., knob, spr. rtn., pos 4 to 3
LS = Four-pos., lever, spr. rtn., pos 4 to 3

Switch Color
H = Black

Cam Location/Type
1D = For all three-pos.
3A = For all two-pos.
8E = For all four-pos.

Contact Block Location (viewed from rear) ②	
Left Side	**Right Side**
A = NO	**A5** = NO
A2 = 2NO	**A6** = 2NO
B1 = NC	**B** = NC
B2 = 2NC	**B6** = 2NC
C = NOEM	**C5** = NOEM
C2 = 2 NOEM	**C6** = 2 NOEM
D1 = NCLB	**D** = NCLB
D2 = 2NCLB	**D6** = 2NCLB
E1 = NOEM-NCLB	**E5** = NOEM-NCLB
F1 = NO and NC	**Q1** = NO and NC
F4 = 1NO-1NC	

Notes

① Maximum of four contact blocks per side or a total of eight contact blocks recommended.

② Maximum of two contact blocks per side or a total of four contacts blocks recommended.

1

Product Selection

Momentary Pushbutton Units, Non-Illuminated

UL (NEMA) Type 3, 3R, 4, 4X, 12 and 13

- Flush, extended or 40 mm mushroom head operators

HT800 Pushbuttons

HT800 Pushbuttons—Point-of-Purchase Units

Description	Catalog Number
Two-position maintained selector switch 1NO/1NC contact block, three square legend plates: OFF ON, MAN. AUTO, UP DOWN	**HT8JAH3AAB-POP**
Three-position maintained selector switch, black knob, 1NO/1NC contact block, three square legend plates: HAND OFF AUTO, FOR. OFF REV., OPEN OFF CLOSE	**HT8JBH1DAB-POP**
Three-position selector switch, spring return from left and right, black knob, 1NO/1NC contact block, three square legend plates: UP OFF DOWN, FOR OFF REV., OPEN OFF CLOSE	**HT8JXH1DAB-POP**
Red push-pull emergency stop, 1NO/1NC contact block, three square legend plates: STOP, EMERG. STOP, OFF	**HT8CBRAB-POP**
Illuminated push-pull maintained red pushbutton, 120V full voltage low profile LED, three square legend plates: STOP, EMERG. STOP, OFF	**HT8FBRABFL7-POP**
Illuminated push-pull maintained red pushbutton, 24V full voltage low profile LED, three square legend plates: STOP, EMERG. STOP, OFF	**HT8FBRABFL3-POP**
Green flush pushbutton, 1NO/1NC contact block, three square legend plates: START, ON, RUN	**HT8AAGAB-POP**
Black flush pushbutton, 1NO/1NC contact block, three square legend plates: RESET, JOG, OPEN	**HT8AAHAB-POP**
Red flush pushbutton, 1NO/1NC contact block, three square legend plates: STOP, CLOSE, OFF	**HT8AARAB-POP**
Red extended pushbutton, 1NO/1NC contact block, three square legend plates: STOP, CLOSE, OFF	**HT8ABRAB-POP**
Black extended pushbutton, 1NO/1NC contact block, three square legend plates: RESET, JOG, OPEN	**HT8ABHAB-POP**
Illuminated green pushbutton, 120V full voltage incandescent, 1NO/1NC contact block, three square legend plates: START, ON, RUN	**HT8GBGABV7-POP**
Illuminated green pushbutton, 24V full voltage incandescent, 1NO/1NC contact block, three square legend plates: START, ON, RUN	**HT8GBGABV3-POP**

Flush Head Operator

Extended Head Operator

40 mm Mushroom Head Operator

Momentary Contact Pushbutton Units, Non-Illuminated

Contact Type	Button Color	Flush Head Catalog Number	Extended Head Catalog Number	Mushroom Head (40 mm) Catalog Number
No contact	Black	**HT8AAH**	**HT8ABH**	**HT8AEH**
	Red	**HT8AAR**	**HT8ABR**	**HT8AER**
	Green	**HT8AAG**	**HT8ABG**	**HT8AEG**
1NO	Black	**HT8AAHA**	**HT8ABHA**	**HT8AEHA**
	Red	**HT8AARA**	**HT8ABRA**	**HT8AERA**
	Green	**HT8AAGA**	**HT8ABGA**	**HT8AEGA**
1NC	Black	**HT8AAHB**	**HT8ABHB**	**HT8AEHB**
	Red	**HT8AARB**	**HT8ABRB**	**HT8AERB**
	Green	**HT8AAGB**	**HT8ABGB**	**HT8AEGB**
1NO-1NC	Black	**HT8AAHAB**	**HT8ABHAB**	**HT8AEHAB**
	Red	**HT8AARAB**	**HT8ABRAB**	**HT8AERAB**
	Green	**HT8AAGAB**	**HT8ABGAB**	**HT8AEGAB**
2NO-2NC	Black	**HT8AAHF1Q1**	**HT8ABHF1Q1**	**HT8AEHF1Q1**
	Red	**HT8AARF1Q1**	**HT8ABRF1Q1**	**HT8AERF1Q1**
	Green	**HT8AAGF1Q1**	**HT8ABGF1Q1**	**HT8AEGF1Q1**

1

Illuminated Pushbutton Units

UL (NEMA) Type 3, 3R, 4, 4X, 12 and 13

- Incandescent or LED
- Full voltage or transformer type
- 24V and 120V

Illuminated Pushbutton Operator

Illuminated Pushbuttons

Type	Volts	Lens Color	Operator Only Catalog Number	1NO Catalog Number	1NC Catalog Number	1NO-1NC Catalog Number	2NO-2NC Catalog Number
Incandescent Lamp							
Full voltage	120 Vac/Vdc	No lens ①	**HT8GBFV**	—	—	—	—
		Red	**HT8GBRV7**	**HT8GBRAV7**	**HT8GBRBV7**	**HT8GBRABV7**	**HT8GBRF1Q1V7**
		Green	**HT8GBGV7**	**HT8GBGAV7**	**HT8GBGBV7**	**HT8GBGABV7**	**HT8GBGF1Q1V7**
		Amber	**HT8GBAV7**	**HT8GBAAV7**	**HT8GBABV7**	**HT8GBAABV7**	**HT8GBAF1Q1V7**
		Clear	**HT8GBCV7**	**HT8GBCAV7**	**HT8GBCBV7**	**HT8GBCABV7**	**HT8GBCF1Q1V7**
		White	**HT8GBWV7**	**HT8GBWAV7**	**HT8GBWBV7**	**HT8GBWABV7**	**HT8GBWF1Q1V7**
		Yellow	**HT8GBYV7**	**HT8GBYAV7**	**HT8GBYBV7**	**HT8GBYABV7**	**HT8GBYF1Q1V7**
		Blue	**HT8GBBV7**	**HT8GBBAV7**	**HT8GBBBV7**	**HT8GBBABV7**	**HT8GBBF1Q1V7**
	24 Vac/Vdc	No lens ①	**HT8GBFV**	—	—	—	—
		Red	**HT8GBRV3**	**HT8GBRAV3**	**HT8GBRBV3**	**HT8GBRABV3**	**HT8GBRF1Q1V3**
		Green	**HT8GBGV3**	**HT8GBGAV3**	**HT8GBGBV3**	**HT8GBGABV3**	**HT8GBGF1Q1V3**
		Amber	**HT8GBAV3**	**HT8GBAAV3**	**HT8GBABV3**	**HT8GBAABV3**	**HT8GBAF1Q1V3**
		Clear	**HT8GBCV3**	**HT8GBCAV3**	**HT8GBCBV3**	**HT8GBCABV3**	**HT8GBCF1Q1V3**
		White	**HT8GBWV3**	**HT8GBWAV3**	**HT8GBWBV3**	**HT8GBWABV3**	**HT8GBWF1Q1V3**
		Yellow	**HT8GBYV3**	**HT8GBYAV3**	**HT8GBYBV3**	**HT8GBYABV3**	**HT8GBYF1Q1V3**
		Blue	**HT8GBBV3**	**HT8GBBAV3**	**HT8GBBBV3**	**HT8GBBABV3**	**HT8GBBF1Q1V3**
Transformer	120 Vac	No lens ①	**HT8GBT1**	—	—	—	—
		Red	**HT8GBRT1**	**HT8GBRAT1**	**HT8GBRBT1**	**HT8GBRABT1**	**HT8GBRF1Q1T1**
		Green	**HT8GBGT1**	**HT8GBGAT1**	**HT8GBGBT1**	**HT8GBGABT1**	**HT8GBGF1Q1T1**
		Amber	**HT8GBAT1**	**HT8GBAAT1**	**HT8GBABT1**	**HT8GBAABT1**	**HT8GBAF1Q1T1**
		Clear	**HT8GBCT1**	**HT8GBCAT1**	**HT8GBCBT1**	**HT8GBCABT1**	**HT8GBCF1Q1T1**
		White	**HT8GBWT1**	**HT8GBWAT1**	**HT8GBWBT1**	**HT8GBWABT1**	**HT8GBWF1Q1T1**
		Yellow	**HT8GBYT1**	**HT8GBYAT1**	**HT8GBYBT1**	**HT8GBYABT1**	**HT8GBYF1Q1T1**
		Blue	**HT8GBBT1**	**HT8GBBAT1**	**HT8GBBBT1**	**HT8GBBABT1**	**HT8GBBF1Q1T1**

Note

① Light unit base operator without lens or bulb.

UL (NEMA) Type 3, 3R, 4, 4X, 12 and 13

Illuminated Pushbutton Operator

Illuminated Pushbuttons, continued

Type	Volts	Lens Color	Operator Only Catalog Number	1NO Catalog Number	1NC Catalog Number	1NO-1NC Catalog Number	2NO-2NC Catalog Number
LED							
Full voltage	120 Vac/Vdc	No lens ①	**HT8GBFV**	—	—	—	—
		Red	**HT8GBRF7**	**HT8GBRAF7**	**HT8GBRBF7**	**HT8GBRABF7**	**HT8GBRF1Q1F7**
		Green	**HT8GBGF7**	**HT8GBGAF7**	**HT8GBGBF7**	**HT8GBGABF7**	**HT8GBGF1Q1F7**
		Amber	**HT8GBAF7**	**HT8GBAAF7**	**HT8GBABF7**	**HT8GBAABF7**	**HT8GBAF1Q1F7**
		Clear	**HT8GBCF7**	**HT8GBCAF7**	**HT8GBCBF7**	**HT8GBCABF7**	**HT8GBCF1Q1F7**
		White	**HT8GBWF7**	**HT8GBWAF7**	**HT8GBWBF7**	**HT8GBWABF7**	**HT8GBWF1Q1F7**
		Yellow	**HT8GBYF7**	**HT8GBYAF7**	**HT8GBYBF7**	**HT8GBYABF7**	**HT8GBYF1Q1F7**
		Blue	**HT8GBBF7**	**HT8GBBAF7**	**HT8GBBBF7**	**HT8GBBABF7**	**HT8GBBF1Q1F7**
	24 Vac/Vdc	No lens ①	**HT8GBFV**	—	—	—	—
		Red	**HT8GBRF3**	**HT8GBRAF3**	**HT8GBRBF3**	**HT8GBRABF3**	**HT8GBRF1Q1F3**
		Green	**HT8GBGF3**	**HT8GBGAF3**	**HT8GBGBF3**	**HT8GBGABF3**	**HT8GBGF1Q1F3**
		Amber	**HT8GBAF3**	**HT8GBAAF3**	**HT8GBABF3**	**HT8GBAABF3**	**HT8GBAF1Q1F3**
		Clear	**HT8GBCF3**	**HT8GBCAF3**	**HT8GBCBF3**	**HT8GBCABF3**	**HT8GBCF1Q1F3**
		White	**HT8GBWF3**	**HT8GBWAF3**	**HT8GBWBF3**	**HT8GBWABF3**	**HT8GBWF1Q1F3**
		Yellow	**HT8GBYF3**	**HT8GBYAF3**	**HT8GBYBF3**	**HT8GBYABF3**	**HT8GBYF1Q1F3**
		Blue	**HT8GBBF3**	**HT8GBBAF3**	**HT8GBBBF3**	**HT8GBBABF3**	**HT8GBBF1Q1F3**
Transformer	120 Vac	No lens ①	**HT8GBT1**	—	—	—	—
		Red	**HT8GBRL1**	**HT8GBRAL1**	**HT8GBRBL1**	**HT8GBRABL1**	**HT8GBRF1Q1L1**
		Green	**HT8GBGL1**	**HT8GBGAL1**	**HT8GBGBL1**	**HT8GBGABL1**	**HT8GBGF1Q1L1**
		Amber	**HT8GBAL1**	**HT8GBAAL1**	**HT8GBABL1**	**HT8GBAABL1**	**HT8GBAF1Q1L1**
		Clear	**HT8GBCL1**	**HT8GBCAL1**	**HT8GBCBL1**	**HT8GBCABL1**	**HT8GBCF1Q1L1**
		White	**HT8GBWL1**	**HT8GBWAL1**	**HT8GBWBL1**	**HT8GBWABL1**	**HT8GBWF1Q1L1**
		Yellow	**HT8GBYL1**	**HT8GBYAL1**	**HT8GBYBL1**	**HT8GBYABL1**	**HT8GBYF1Q1L1**
		Blue	**HT8GBBL1**	**HT8GBBAL1**	**HT8GBBBL1**	**HT8GBBABL1**	**HT8GBBF1Q1L1**

Note

① Light unit base operator without lens or bulb.

1

Guarded Illuminated Pushbutton Units

UL (NEMA) Type 3, 3R, 4, 4X, 12 and 13

- Incandescent or LED
- Full voltage or transformer type
- 24V and 120V

Guarded Illuminated Pushbutton Operator

Guarded Illuminated Pushbuttons

Type	Volts	Lens Color	Operator Only Catalog Number	1NO Catalog Number	1NC Catalog Number	1NO-1NC Catalog Number	2NO-2NC Catalog Number
Incandescent Lamp							
Full voltage	120 Vac/Vdc	No lens ①	**HT8GDFV**	—	—	—	—
		Red	**HT8GDRV7**	**HT8GDRAV7**	**HT8GDRBV7**	**HT8GDRABV7**	**HT8GDRF1Q1V7**
		Green	**HT8GDGV7**	**HT8GDGAV7**	**HT8GDGBV7**	**HT8GDGABV7**	**HT8GDGF1Q1V7**
		Amber	**HT8GDAV7**	**HT8GDAAV7**	**HT8GDABV7**	**HT8GDAABV7**	**HT8GDAF1Q1V7**
		Clear	**HT8GDCV7**	**HT8GDVAV7**	**HT8GDCBV7**	**HT8GDCABV7**	**HT8GDCF1Q1V7**
		White	**HT8GDWV7**	**HT8GDWAV7**	**HT8GDWBV7**	**HT8GDWABV7**	**HT8GDWF1Q1V7**
		Yellow	**HT8GDYV7**	**HT8GDYAV7**	**HT8GDYBV7**	**HT8GDYABV7**	**HT8GDYF1Q1V7**
		Blue	**HT8GDBV7**	**HT8GDBAV7**	**HT8GDBBV7**	**HT8GDBABV7**	**HT8GDBF1Q1V7**
	24 Vac/Vdc	No lens ①	**HT8GDFV**	—	—	—	—
		Red	**HT8GDRV3**	**HT8GDRAV3**	**HT8GDRBV3**	**HT8GDRABV3**	**HT8GDRF1Q1V3**
		Green	**HT8GDGV3**	**HT8GDGAV3**	**HT8GDGBV3**	**HT8GDGABV3**	**HT8GDGF1Q1V3**
		Amber	**HT8GDAV3**	**HT8GDAAV3**	**HT8GDABV3**	**HT8GDAABV3**	**HT8GDAF1Q1V3**
		Clear	**HT8GDCV3**	**HT8GDVAV3**	**HT8GDCBV3**	**HT8GDCABV3**	**HT8GDCF1Q1V3**
		White	**HT8GDWV3**	**HT8GDWAV3**	**HT8GDWBV3**	**HT8GDWABV3**	**HT8GDWF1Q1V3**
		Yellow	**HT8GDYV3**	**HT8GDYAV3**	**HT8GDYBV3**	**HT8GDYABV3**	**HT8GDYF1Q1V3**
		Blue	**HT8GDBV3**	**HT8GDBAV3**	**HT8GDBBV3**	**HT8GDBABV3**	**HT8GDBF1Q1V3**
Transformer	120 Vac	No lens ①	**HT8GDT1**	—	—	—	—
		Red	**HT8GDRT1**	**HT8GDRAT1**	**HT8GDRBT1**	**HT8GDRABT1**	**HT8GDRF1Q1T1**
		Green	**HT8GDGT1**	**HT8GDGAT1**	**HT8GDGBT1**	**HT8GDGABT1**	**HT8GDGF1Q1T1**
		Amber	**HT8GDAT1**	**HT8GDAAT1**	**HT8GDABT1**	**HT8GDAABT1**	**HT8GDAF1Q1T1**
		Clear	**HT8GDCT1**	**HT8GDCAT1**	**HT8GDCBT1**	**HT8GDCABT1**	**HT8GDCF1Q1T1**
		White	**HT8GDWT1**	**HT8GDWAT1**	**HT8GDWBT1**	**HT8GDWABT1**	**HT8GDWF1Q1T1**
		Yellow	**HT8GDYT1**	**HT8GDYAT1**	**HT8GDYBT1**	**HT8GDYABT1**	**HT8GDYF1Q1T1**
		Blue	**HT8GDBT1**	**HT8GDBAT1**	**HT8GDBBT1**	**HT8GDBABT1**	**HT8GDBF1Q1T1**

Note

① Light unit base operator without lens or bulb.

UL (NEMA) Type 3, 3R, 4, 4X, 12 and 13

Guarded Illuminated Pushbutton Operator

Guarded Illuminated Pushbuttons, continued

Type	Volts	Lens Color	Operator Only Catalog Number	1NO Catalog Number	1NC Catalog Number	1NO-1NC Catalog Number	2NO-2NC Catalog Number
LED							
Full voltage	120 Vac/Vdc	No lens ①	**HT8GDFV**	—	—	—	—
		Red	**HT8GDRF7**	**HT8GDRAF7**	**HT8GDRBF7**	**HT8GDRABF7**	**HT8GDRF1Q1F7**
		Green	**HT8GDGF7**	**HT8GDGAF7**	**HT8GDGBF7**	**HT8GDGABF7**	**HT8GDGF1Q1F7**
		Amber	**HT8GDAF7**	**HT8GDAAF7**	**HT8GDABF7**	**HT8GDAABF7**	**HT8GDAF1Q1F7**
		Clear	**HT8GDCF7**	**HT8GDCAF7**	**HT8GDCBF7**	**HT8GDCABF7**	**HT8GDCF1Q1F7**
		White	**HT8GDWF7**	**HT8GDWAF7**	**HT8GDWBF7**	**HT8GDWABF7**	**HT8GDWF1Q1F7**
		Yellow	**HT8GDYF7**	**HT8GDYAF7**	**HT8GDYBF7**	**HT8GDYABF7**	**HT8GDYF1Q1F7**
		Blue	**HT8GDBF7**	**HT8GDBAF7**	**HT8GDBBF7**	**HT8GDBABF7**	**HT8GDBF1Q1F7**
	24 Vac/Vdc	No lens ①	**HT8GDFV**	—	—	—	—
		Red	**HT8GDRF3**	**HT8GDRAF3**	**HT8GDRBF3**	**HT8GDRABF3**	**HT8GDRF1Q1F3**
		Green	**HT8GDGF3**	**HT8GDGAF3**	**HT8GDGBF3**	**HT8GDGABF3**	**HT8GDGF1Q1F3**
		Amber	**HT8GDAF3**	**HT8GDAAF3**	**HT8GDABF3**	**HT8GDAABF3**	**HT8GDAF1Q1F3**
		Clear	**HT8GDCF3**	**HT8GDCAF3**	**HT8GDCBF3**	**HT8GDCABF3**	**HT8GDCF1Q1F3**
		White	**HT8GDWF3**	**HT8GDWAF3**	**HT8GDWBF3**	**HT8GDWABF3**	**HT8GDWF1Q1F3**
		Yellow	**HT8GDYF3**	**HT8GDYAF3**	**HT8GDYBF3**	**HT8GDYABF3**	**HT8GDYF1Q1F3**
		Blue	**HT8GDBF3**	**HT8GDBAF3**	**HT8GDBBF3**	**HT8GDBABF3**	**HT8GDBF1Q1F3**
Transformer	120 Vac	No lens ①	**HT8GDT1**	—	—	—	—
		Red	**HT8GDRL1**	**HT8GDRAL1**	**HT8GDRBL1**	**HT8GDRABL1**	**HT8GDRF1Q1L1**
		Green	**HT8GDGL1**	**HT8GDGAL1**	**HT8GDGBL1**	**HT8GDGABL1**	**HT8GDGF1Q1L1**
		Amber	**HT8GDAL1**	**HT8GDAAL1**	**HT8GDABL1**	**HT8GDAABL1**	**HT8GDAF1Q1L1**
		Clear	**HT8GDCL1**	**HT8GDCAL1**	**HT8GDCBL1**	**HT8GDCABL1**	**HT8GDCF1Q1L1**
		White	**HT8GDWL1**	**HT8GDWAL1**	**HT8GDWBL1**	**HT8GDWABL1**	**HT8GDWF1Q1L1**
		Yellow	**HT8GDYL1**	**HT8GDYAL1**	**HT8GDYBL1**	**HT8GDYABL1**	**HT8GDYF1Q1L1**
		Blue	**HT8GDBL1**	**HT8GDBAL1**	**HT8GDBBL1**	**HT8GDBABL1**	**HT8GDBF1Q1L1**

Note

① Light unit base operator without lens or bulb.

1

Indicating Light Units

UL (NEMA) Type 3, 3R, 4, 4X, 12 and 13

- Incandescent or LED
- Full voltage or transformer type
- Standard and PresTest types
- 24V and 120V

PresTest—This device incorporates a press-to-test feature whereby depressing the lens disconnects the light from the source being monitored and connects the lamp to a continuously energized circuit for immediate detection of faulty lamps.

Indicating Light Unit

PresTest Light Unit

Indicating Light Units

Type	Volts	Lens Color	Indicating Light Catalog Number	PresTest Catalog Number
Incandescent				
Full voltage	120 Vac/Vdc	No lens ①	**HT8HFFV**	**HT8GTFV**
		Red	**HT8HFRV7**	**HT8GTRV7**
		Green	**HT8HFGV7**	**HT8GTGV7**
		Amber	**HT8HFAV7**	**HT8GTAV7**
		Clear	**HT8HFCV7**	**HT8GTCV7**
		White	**HT8HFWV7**	**HT8GTWV7**
		Yellow	**HT8HFYV7**	**HT8GTYV7**
		Blue	**HT8HFBV7**	**HT8GTBV7**
	24 Vac/Vdc	No lens ①	**HT8HFFV**	**HT8GTFV**
		Red	**HT8HFRV3**	**HT8GTRV3**
		Green	**HT8HFGV3**	**HT8GTGV3**
		Amber	**HT8HFAV3**	**HT8GTAV3**
		Clear	**HT8HFCV3**	**HT8GTCV3**
		White	**HT8HFWV3**	**HT8GTWV3**
		Yellow	**HT8HFYV3**	**HT8GTYV3**
		Blue	**HT8HFBV3**	**HT8GTBV3**
Transformer	120 Vac 50/60 Hz	No lens ①	**HT8HBT1**	**HT8GTT1**
		Red	**HT8HBRT1**	**HT8GTRT1**
		Green	**HT8HBGT1**	**HT8GTGT1**
		Amber	**HT8HBAT1**	**HT8GTAT1**
		Clear	**HT8HBCT1**	**HT8GTCT1**
		White	**HT8HBWT1**	**HT8GTWT1**
		Yellow	**HT8HBYT1**	**HT8GTYT1**
		Blue	**HT8HBBT1**	**HT8GTBT1**

Note

① Light unit base operator without lens or bulb.

UL (NEMA) Type 3, 3R, 4, 4X, 12 and 13

Indicating Light Unit

PresTest Light Unit

Indicating Light Units, continued

Type	Volts	Lens Color	Indicating Light Catalog Number	PresTest Catalog Number
LED				
Full voltage	120 Vac/Vdc	No lens ①	**HT8HFFV**	**HT8GTFV**
		Red	**HT8HFRF7**	**HT8GTRF7**
		Green	**HT8HFGF7**	**HT8GTGF7**
		Amber	**HT8HFAF7**	**HT8GTAF7**
		Clear	**HT8HFCF7**	**HT8GTCF7**
		White	**HT8HFWF7**	**HT8GTWF7**
		Yellow	**HT8HFYF7**	**HT8GTYF7**
		Blue	**HT8HFBF7**	**HT8GTBF7**
	24 Vac/Vdc	No lens ①	**HT8HFFV**	**HT8GTFV**
		Red	**HT8HFRF3**	**HT8GTRF3**
		Green	**HT8HFGF3**	**HT8GTGF3**
		Amber	**HT8HFAF3**	**HT8GTAF3**
		Clear	**HT8HFCF3**	**HT8GTCF3**
		White	**HT8HFWF3**	**HT8GTWF3**
		Yellow	**HT8HFYF3**	**HT8GTYF3**
		Blue	**HT8HFBF3**	**HT8GTBF3**
Transformer	120 Vac 50/60 Hz	No lens ①	**HT8HBT1**	**HT8GTT1**
		Red	**HT8HBRL1**	**HT8GTRL1**
		Green	**HT8HBGL1**	**HT8GTGL1**
		Amber	**HT8HBAL1**	**HT8GTAL1**
		Clear	**HT8HBCL1**	**HT8GTCL1**
		White	**HT8HBWL1**	**HT8GTWL1**
		Yellow	**HT8HBYL1**	**HT8GTYL1**
		Blue	**HT8HBBL1**	**HT8GTBL1**

Note

① Light unit base operator without lens or bulb.

1

Push-Pull Units

UL (NEMA) Type 3, 3R, 4, 4X, 12 and 13

- 40 mm mushroom head
- Two-position maintained
- Non-illuminated

Round Head Two-Position Push-Pull Unit

Flat Head Two-Position Push-Pull Unit

Two-Position Push-Pull, Maintained, Non-Illuminated

Contact Type	Operator Position—Maintained Out	In	Button Color	Round Head Mushroom Head Button Catalog Number	Flat Head Mushroom Head Button Catalog Number
No contact	—	—	Black	**HT8CBH**	**HT8DBH**
			Red	**HT8CBR**	**HT8DBR**
			Green	**HT8CBG**	**HT8DBG**
NO	O	X	Black	**HT8CBHA**	**HT8DBHA**
			Red	**HT8CBRA**	**HT8DBRA**
			Green	**HT8CBGA**	**HT8DBGA**
NC	X	O	Black	**HT8CBHB**	**HT8DBHB**
			Red	**HT8CBRB**	**HT8DBRB**
			Green	**HT8CBGB**	**HT8DBGB**
NO-NC	O X	X O	Black	**HT8CBHAB**	**HT8DBHAB**
			Red	**HT8CBRAB**	**HT8DBRAB**
			Green	**HT8CBGAB**	**HT8DBGAB**
NCLB ① NC	X X	O O	Black	**HT8CBHD1B**	**HT8DBHD1B**
			Red	**HT8CBRD1B**	**HT8DBRD1B**
			Green	**HT8CBGD1B**	**HT8DBGD1B**
NCLB ① NCLB ①	X X	O O	Black	**HT8CBHD1D**	**HT8DBHD1D**
			Red	**HT8CBRD1D**	**HT8DBRD1D**
			Green	**HT8CBGD1D**	**HT8DBGD1D**

Note

① NCLB = normally closed late break.

Illuminated Push-Pull Units

UL (NEMA) Type 3, 3R, 4, 4X, 12 and 13

- Incandescent or LED
- Full voltage or transformer type
- 24V and 120V

Illuminated Push-Pull Unit

Illuminated Push-Pull Units

Type	Volts	Lens Color	Operator Only Catalog Number	1NO Catalog Number	1NC Catalog Number	1NO-1NC Catalog Number	2NCLB Catalog Number
Incandescent Lamp							
Full voltage	120 Vac/Vdc	Red	**HT8FBRV7**	**HT8FBRAV7**	**HT8FBRBV7**	**HT8FBRABV7**	**HT8FBRD1DV7**
		Green	**HT8FBGV7**	**HT8FBGAV7**	**HT8FBGBV7**	**HT8FBGABV7**	**HT8FBGD1DV7**
	24 Vac/Vdc	Red	**HT8FBRV3**	**HT8FBRAV3**	**HT8FBRBV3**	**HT8FBRABV3**	**HT8FBRD1DV3**
		Green	**HT8FBGV3**	**HT8FBGAV3**	**HT8FBGBV3**	**HT8FBGABV3**	**HT8FBGD1DV3**
Transformer	120 Vac	Red	**HT8FBRT1**	**HT8FBRAT1**	**HT8FBRBT1**	**HT8FBRABT1**	**HT8FBRD1DT1**
		Green	**HT8FBGT1**	**HT8FBGAT1**	**HT8FBGBT1**	**HT8FBGABT1**	**HT8FBGD1DT1**
LED Lamp							
Full voltage	120 Vac/Vdc	Red	**HT8FBRF7**	**HT8FBRAF7**	**HT8FBRBF7**	**HT8FBRABF7**	**HT8FBRD1DF7**
		Green	**HT8FBGF7**	**HT8FBGAF7**	**HT8FBGBF7**	**HT8FBGABF7**	**HT8FBGD1DF7**
	24 Vac/Vdc	Red	**HT8FBRF3**	**HT8FBRAF3**	**HT8FBRBF3**	**HT8FBRABF3**	**HT8FBRD1DF3**
		Green	**HT8FBGF3**	**HT8FBGAF3**	**HT8FBGBF3**	**HT8FBGABF3**	**HT8FBGD1DF3**
Transformer	120 Vac	Red	**HT8FBRL1**	**HT8FBRAL1**	**HT8FBRBL1**	**HT8FBRABL1**	**HT8FBRD1DL1**
		Green	**HT8FBGL1**	**HT8FBGAL1**	**HT8FBGBL1**	**HT8FBGABL1**	**HT8FBGD1DL1**

Note: Complete illuminated push-pull switches will not fit in a standard 3 in deep enclosure.

Illuminated Push-Pull Units with Low Profile Light Units

Type	Voltage	Color	Fingersafe	Operator Only Catalog Number	1NO Catalog Number	1NC Catalog Number	1NO-1NC Catalog Number	2NCLB Catalog Number	1NO-1NCLB Catalog Number
LED Lamp									
Full voltage	120 Vac/Vdc	Red	Yes	**HT8FBRFL7P**	**HT8FBRAFL7P**	**HT8FBRBFL7P**	**HT8FBRABFL7P**	**HT8FBRD1DFL7P**	**HT8FBRD1BFL7P**
		Red	No	**HT8FBRFL7**	**HT8FBRAFL7**	**HT8FBRBFL7**	**HT8FBRABFL7**	**HT8FBRD1DFL7**	**HT8FBRD1BFL7**
	24 Vac/Vdc	Red	Yes	**HT8FBRFL3P**	**HT8FBRAFL3P**	**HT8FBRBFL3P**	**HT8FBRABFL3P**	**HT8FBRD1DFL3P**	**HT8FBRD1BFL3P**
		Red	No	**HT8FBRFL3**	**HT8FBRAFL3**	**HT8FBRBFL3**	**HT8FBRABFL3**	**HT8FBRD1DFL3**	**HT8FBRD1BFL3**
Incandescent									
Full voltage	120 Vac/Vdc	Red	Yes	**HT8FBRVL7P**	**HT8FBRAVL7P**	**HT8FBRBVL7P**	**HT8FBRABVL7P**	**HT8FBRD1DVL7P**	**HT8FBRD1BVL7P**
		Red	No	**HT8FBRVL7**	**HT8FBRAVL7**	**HT8FBRBVL7**	**HT8FBRABVL7**	**HT8FBRD1DVL7**	**HT8FBRD1BVL7**
	24 Vac/Vdc	Red	Yes	**HT8FBRVL3P**	**HT8FBRAVL3P**	**HT8FBRBVL3P**	**HT8FBRABVL3P**	**HT8FBRD1DVL3P**	**HT8FBRD1BVL3P**
		Red	No	**HT8FBRVL3**	**HT8FBRAVL3**	**HT8FBRBVL3**	**HT8FBRABVL3**	**HT8FBRD1DVL3**	**HT8FBRD1BVL3**

1

Selector Switch Units

UL (NEMA) Type 3, 3R, 4, 4X, 12 and 13

- Two-, three- and four-position
- Non-illuminated

Standard Knob Operator

Standard Lever Operator

Two-Position Selector Switch Units, Non-Illuminated

Contact Type	Operator Position ①		Operating Mode ②		Standard Black Knob Catalog Number	Standard Black Lever Catalog Number
No contacts	—	—	M	M	**HT8JAH3A**	**HT8JDH3A**
			S	M	**HT8JKH3A**	**HT8JLH3A**
			M	S	**HT8JNH3A**	**HT8JPH3A**
1NO	O	X	M	M	**HT8JAH3AA5**	**HT8JDH3AA5**
			S	M	**HT8JKH3AA5**	**HT8JLH3AA5**
			M	S	**HT8JNH3AA5**	**HT8JPH3AA5**
2NO	X O	O X	M	M	**HT8JAH3AAA5**	**HT8JDH3AAA5**
			S	M	**HT8JKH3AAA5**	**HT8JLH3AAA5**
			M	S	**HT8JNH3AAA5**	**HT8JPH3AAA5**
2NO-2NC	X O O X	O X X O	M	M	**HT8JAH3AF1Q1**	**HT8JDH3AF1Q1**
			S	M	**HT8JKH3AF1Q1**	**HT8JLH3AF1Q1**
			M	S	**HT8JNH3AF1Q1**	**HT8JPH3AF1Q1**

Standard Knob Operator

Standard Lever Operator

Three-Position Selector Switch Units, Non-Illuminated

Contact Type	Operator Position ①			Operating Mode ②			Standard Black Knob Catalog Number	Standard Black Lever Catalog Number
No contacts	—	—	—	M	M	M	**HT8JBH1D**	**HT8JEH1D**
				S	M	M	**HT8JRH1D**	**HT8JSH1D**
				M	M	S	**HT8JUH1D**	**HT8JVH1D**
				S	M	S	**HT8JXH1D**	**HT8JYH1D**
2NO	X O	O O	O X	M	M	M	**HT8JBH1DAA5**	**HT8JEH1DAA5**
				S	M	M	**HT8JRH1DAA5**	**HT8JSH1DAA5**
				M	M	S	**HT8JUH1DAA5**	**HT8JVH1DAA5**
				S	M	S	**HT8JXH1DAA5**	**HT8JYH1DAA5**
2NO-2NC ③	X O O	O X O	O O X	M	M	M	**HT8JBH1DF1Q1**	**HT8JEH1DF1Q1**
				S	M	M	**HT8JRH1DF1Q1**	**HT8JSH1DF1Q1**
				M	M	S	**HT8JUH1DF1Q1**	**HT8JVH1DF1Q1**
				S	M	S	**HT8JXH1DF1Q1**	**HT8JYH1DF1Q1**
2NO-2NC	X O O X	O X O X	O X X O	M	M	M	**HT8JBH1DF1Q1**	**HT8JEH1DF1Q1**
				S	M	M	**HT8JRH1DF1Q1**	**HT8JSH1DF1Q1**
				M	M	S	**HT8JUH1DF1Q1**	**HT8JVH1DF1Q1**
				S	M	S	**HT8JXH1DF1Q1**	**HT8JYH1DF1Q1**

Notes

① X = closed circuit, O = open circuit.

② M = Maintained, S = Momentary.

③ For OXO, NC contacts must be wired in series—see Three-Position Selector Switch table on **Page V7-T1-340**.

UL (NEMA) Type 3, 3R, 4, 4X, 12 and 13

Standard Knob Operator

Standard Lever Operator

Four-Position Selector Switch Units, Non-Illuminated

Contact Type	Operator Position ①				Operating Mode ②				Standard Black Knob Catalog Number	Standard Black Lever Catalog Number
No contacts	—	—	—	—	M	M	M	M	**HT8JCH8E**	**HT8JFH8E**
					S	M	M	M	**HT8LNH8E**	**HT8LPH8E**
					M	M	M	S	**HT8LRH8E**	**HT8LSH8E**
2NO-2NC	X 0 0 0	0 X 0 0	0 0 X 0	0 0 0 X	M	M	M	M	**HT8JCH8EF1Q1**	**HT8JFH8EF1Q1**
					S	M	M	M	**HT8LNH8EF1Q1**	**HT8LPH8EF1Q1**
					M	M	M	S	**HT8LRH8EF1Q1**	**HT8LSH8EF1Q1**

Notes

① X = closed circuit, 0 = open circuit.

② M = Maintained, S = Momentary.

1

Selector Switch Contact Block Selection

For Two-, Three- and Four-Position Selector Switches

Two-Position Selector Switch (Cam Code 3A)

Operator Position

		Left		Right
X	O	NO	or	NC
O	X	NC	or	NO

Three-Position Selector Switch (Cam Code 1D)

Operator Position

			Left	Right
X	O	O	NO	—
O	X	O	NC	NC
O	O	X	—	NO
O	X	X	NC	—
X	X	O	—	NC

Four-Position Selector Switch (Cam Code 8E)

Operator Position

				Left	Right
X	O	O	O	NO	—
O	X	O	O	NC	—
O	O	X	O	—	NO
O	O	O	X	—	NC

Accessories

HT800 Accessories

	Description	Catalog Number
HT8A15	**Illuminated Pushbutton Guard**	**HT8A15**
HT8WRENCH	**Wrench Tool**	**HT8WRENCH**
HT8LAMPTOOL	**Lamp/Bulb Removal Tool**	**HT8LAMPTOOL**
HT8X1	**Thrust Washer (Anti-rotation)** (Included with every operator)	**HT8X1**
HT8X2	**Trim Ring** (Included with every operator)	**HT8X2**
HT8X3	**Sealing/Spacer Washer** (Five included with every operator)	**HT8X3**
HT8GR1	**Grounding Kit for Pushbuttons and Selector Switches** (Included with every operator)	**HT8GR1**
HT8GR2	**Grounding Kit for Indicating Lights** (Included with indicating lights)	**HT8GR2**

Light Units

Light Unit

Type	Voltage	Catalog Number
Full voltage	24 Vac/Vdc	**HT8F3V3**
	120 Vac/Vdc	**HT8F7V8**
Transformer	120 Vac	**HT8L1T1**

1

Options

Legend Plates ①

Standard

Jumbo

For Pushbutton Operators and Indicating Lights

Legend	Color of Field	Standard Catalog Number	Jumbo Catalog Number	Legend	Color of Field	Standard Catalog Number	Jumbo Catalog Number
Letters on Legend Plates Below are 3/16 in High							
CLAMP	Black	**HT8SP90**	**HT8LP90**	OFF	Red	**HT8SP24**	**HT8LP24**
CLOSE		**HT8SP73**	**HT8LP73**	ON	Black	**HT8SP25**	**HT8LP25**
DOWN		**HT8SP74**	**HT8LP74**	OPEN		**HT8SP26**	**HT8LP26**
EMERG. STOP		**HT8SP13**	**HT8LP13**	OUT		**HT8SP27**	**HT8LP27**
FAST		**HT8SP75**	**HT8LP75**	POWER ON		**HT8SP80**	**HT8LP80**
FASTER		**HT8SP87**	**HT8LP87**	RAISE		**HT8SP28**	**HT8LP28**
FEEDER ON		**HT8SP94**	**HT8LP94**	READY		**HT8SP86**	**HT8LP86**
FEEDER OFF		**HT8SP95**	**HT8LP95**	RESET		**HT8SP29**	**HT8LP29**
FORWARD		**HT8SP15**	**HT8LP15**	REVERSE		**HT8SP30**	**HT8LP30**
HIGH		**HT8SP16**	**HT8LP16**	RUN		**HT8SP31**	**HT8LP31**
IN		**HT8SP17**	**HT8LP17**	SAFE		**HT8SP85**	**HT8LP85**
INCH		**HT8SP18**	**HT8LP18**	SLOW		**HT8SP32**	**HT8LP32**
JOG		**HT8SP19**	**HT8LP19**	SLOWER		**HT8SP88**	**HT8LP88**
JOG FOR.		**HT8SP20**	**HT8LP20**	START		**HT8SP33**	**HT8LP33**
JOG REV.		**HT8SP21**	**HT8LP21**	STOP	Red	**HT8SP34**	**HT8LP34**
LOW		**HT8SP22**	**HT8LP22**	TEST	Black	**HT8SP83**	**HT8LP83**
LOWER		**HT8SP23**	**HT8LP23**	TRANSFER		**HT8SP93**	**HT8LP93**
LUBE-FAIL		**HT8SP92**	**HT8LP92**	TRIP		**HT8SP84**	**HT8LP84**
MOTOR RUN		**HT8SP81**	**HT8LP81**	UNCLAMP		**HT8SP91**	**HT8LP91**
MOTOR STOP		**HT8SP82**	**HT8LP82**	UP		**HT8SP35**	**HT8LP35**

Standard

Jumbo

For Selector Switch Operators

Legend	Color of Field	Standard Catalog Number	Jumbo Catalog Number	Legend	Color of Field	Standard Catalog Number	Jumbo Catalog Number
Two-Position—3/16 in High Lettering				**Three-Position—3/16 in High Lettering**			
FOR. REV.	Black	**HT8SP38**	**HT8LP38**	AUTO OFF HAND	Black	**HT8SP49**	**HT8LP49**
HAND AUTO		**HT8SP39**	**HT8LP39**	FOR. OFF REV.		**HT8SP50**	**HT8LP50**
HIGH LOW		**HT8SP40**	**HT8LP40**	FOR. SAFE REV.		**HT8SP69**	**HT8LP69**
JOG RUN		**HT8SP41**	**HT8LP41**	HAND OFF AUTO		**HT8SP51**	**HT8LP51**
MAN. AUTO		**HT8SP67**	**HT8LP67**	MAN. OFF AUTO		**HT8SP68**	**HT8LP68**
OFF ON		**HT8SP42**	**HT8LP42**	OPEN OFF CLOSE		**HT8SP53**	**HT8LP53**
OPEN CLOSE		**HT8SP43**	**HT8LP43**	RUN SAFE JOG		**HT8SP70**	**HT8LP70**
RUN JOG		**HT8SP44**	**HT8LP44**	UP OFF DOWN		**HT8SP54**	**HT8LP54**
SAFE RUN		**HT8SP45**	**HT8LP45**	ON STOP SAFE		**HT8SP71**	**HT8LP71**
START JOG		**HT8SP46**	**HT8LP46**				
START STOP		**HT8SP47**	**HT8LP47**				
UP DOWN		**HT8SP48**	**HT8LP48**				

For Push-Pull Units

Legend	Color of Field	Standard ② Catalog Number	Jumbo ③ Catalog Number
ON/OFF	Black	**HT8PP5**	**HT8R5**
OPEN/CLOSE		**HT8PP8**	**HT8R8**
UP/DOWN		**HT8PP11**	**HT8R11**

Blank Plastic Legend Plates—Square

Legend	Color of Field	Standard Catalog Number	Jumbo Catalog Number
Black	White/Silver	**HT8SP76**	**HT8LP76**
White	Red/ Black	**HT8SP77**	**HT8LP77**

Notes

① For dimensions, see **Page V7-T1-350**.

② 3/32 in high lettering.

③ 1/8 in high lettering.

Legend Plates with Non-Standard Markings

When Ordering Specify

- Catalog number of blank plate.
- Insert the following into Order Notes: legend, letter size and locations. See information below.

Ordering Example:

Catalog no.: **HT85P76STAMP**
Letter size: 3/32 in (2.4 mm)
Pos. A—POWER HOUSE
Pos. B—START PUMP 1

Legend Characters Available

A B C D E F G H I J K L M N O
P Q R S T U V W X Y Z / - . , 1
2 3 4 5 6 7 8 9 0

Legend Positions

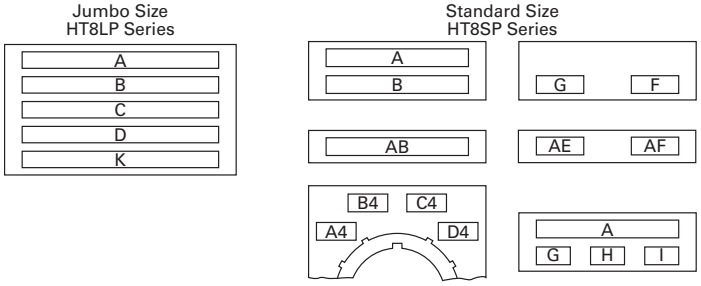

Blank Plastic Legend Plates for Non-Standard Markings—Plastic

Legend	Color of Field	Standard Catalog Number	Jumbo Catalog Number
Black	White/Silver	**HT8SP76STAMP**	**HT8LP76STAMP**
White	Red/Black	**HT8SP77STAMP**	**HT8LP77STAMP**

Maximum Characters per Legend Plate and Approximate Dimensions

		Character Size					
		3/32 in High		1/8 in High		3/16 in High	
Top (Aluminum and Plastic)	Style	Number of Lines	Number of Characters	Number of Lines	Number of Characters	Number of Lines	Number of Characters
Standard	Square	2	18	2	13	1	9
Jumbo ①	Square	5	23	3	18	2	12

Note

① Can be used on top row only of any enclosure.

Contact Blocks

NO Contact Block

NC Contact Block

Contact Blocks ①②

Description/Function	Contact Type	Without Guard Catalog Number	Fingerproof Catalog Number
Standard normally open contact	NO	**HT8A**	**HT8AP**
Standard normally closed contact	NC	**HT8B**	**HT8BP**
Normally open early make contact will make circuit before standard NO contact. DC ratings do not apply.	NOEM	**HT8C**	**HT8CP**
Normally closed late break contact will open after standard NC contact. DC ratings do not apply.	NCLB	**HT8D**	**HT8DP**
Logic level, low voltage NO contact. Gold plated contacts.	NO	**HT8E**	**HT8EP**

Contact Block Location (Viewed from Rear) Suffix Codes ③④

Left Side	Right Side
A = NO	**A5** = NO
A2 = 2NO	**A6** = 2NO
B1 = NC	**B** = NC
B2 = 2NC	**B6** = 2NC
C = NOEM	**C5** = NOEM
C2 = 2 NOEM	**C6** = 2 NOEM
D1 = NCLB	**D** = NCLB
D2 = 2 NCLB	**D6** = 2 NCLB
E1 = NOEM-NCLB	**E5** = NOEM-NCLB
F1 = NO and NC	**Q1** = NO and NC
F4 = 1NO-1NC	

Notes

① See **Page V7-T1-346** for contact block electrical ratings.
② Maximum of four contact blocks per side or a total of eight contact blocks recommended.
③ Maximum of two contact blocks per side or a total of four contact blocks recommended.
④ Standard contact blocks without fingerproof protection.

Replacement Parts

Replacement Bulbs and LEDs

Incandescent Bulb

LED Bulb

Voltage	Color	Catalog Number
Incandescent		
6V	—	**HT8BULBV1**
24V	—	**HT8BULBV3**
120V	—	**HT8BULBV7**
LED		
6–12V (For use with transformers with 6V secondary winding)	Red	**HT8LEDRF1**
	Green	**HT8LEDGF1**
	Amber/orange	**HT8LEDAF1**
	White/clear	**HT8LEDWF1**
	Yellow	**HT8LEDYF1**
	Blue	**HT8LEDBF1**
24V	Red	**HT8LEDRF3**
	Green	**HT8LEDGF3**
	Amber/orange	**HT8LEDAF3**
	White/clear	**HT8LEDWF3**
	Yellow	**HT8LEDYF3**
	Blue	**HT8LEDBF3**
120V	Red	**HT8LEDRF7**
	Green	**HT8LEDGF7**
	Amber/orange	**HT8LEDAF7**
	White/clear	**HT8LEDWF7**
	Yellow	**HT8LEDYF7**
	Blue	**HT8LEDBF7**

Replacement Lenses

Color	Indicating Lights Catalog Number	PresTest Lights Illuminated Pushbuttons Catalog Number
Amber	**HT8LA**	**HT8BA**
Blue	**HT8LB**	**HT8BB**
Clear	**HT8LC**	**HT8BC**
Green	**HT8LG**	**HT8BG**
Red	**HT8LR**	**HT8BR**
White	**HT8LW**	**HT8BW**
Yellow	**HT8LY**	**HT8BY**

Technical Data and Specifications

HT800—Specifications

Description	Specification
Mechanical Ratings	
Frequency of operation	
Pushbuttons	6,000 operations per hour
Selector switches	3,000 operations per hour
Push-pull operators	3,000 operations per hour
Mechanical endurance/life	
Pushbuttons	10 x 10^6 operations 6K ops/hr with 6 NO on left and 6 NC on right
Selector switches	250 x 10^3 operations 3K ops/hr with 2 NO on left and 2 NC on right
Push-pull operators	250 x 10^3 operations 3K ops/hr with 6 NO on left and 6 NC on right
Climatic Conditions	
Operating temperature	10° to 140°F (–12° to 60°C)
Storage temperature	–40° to 176°F (–40° to 80°C)
Altitude	6,562 ft (2,000m)
Humidity	95% RH at 60°C
Terminals	
Contact blocks	#6-32 posidrive saddle clamp type, 1 x 16 AWG to 2 x 14 AWG, 12 in-lbs max.
Light units	#6-32 posidrive saddle clamp type, 1 x 22 AWG to 2 x 14 AWG, 7 in-lbs max.
Electrical Ratings	
Standard contact blocks UL (NEMA) rating	See table below.
Logic level contact block power rating	5V 1 mA (minimum) 28V 500 mA (maximum)

Electrical Ratings—HT800 Standard Contact Blocks, UL Rating

Description/Function	Contact Type	AC	DC	Catalog Number
Standard normally open contact	NO	A600 ①	P600 ②	**HT8A**
Standard normally closed contact	NC	A600 ①	P600 ②	**HT8B**
Normally open early make contact will make circuit before standard NO contact. DC ratings do not apply.	NOEM	A600 ①	—	**HT8C**
Normally closed late break contact will open after standard NC contact. DC ratings do not apply.	NCLB	A600 ①	—	**HT8D**
Logic level, low voltage NO contact. Gold plated contacts.	NO	5V 1 mA (minimum) 28V 500 mA (maximum)		**HT8E**

UL A600 and P600 Ratings

	50 Vac or 60 Hz				Vdc ③		
Description	**120**	**240**	**480**	**600**	**125**	**250**	**600**
Make and emerg. interrupting capacity (amp)	60	30	15	12	1.1	0.55	0.2
Normal load break (amp)	6	3	1.5	1.2	1.1	0.55	0.2
Thermal current (amp)	10	10	10	10	5	5	5
Voltamperes:							
Make and emerg. interrupting capacity	7200	7200	7200	7200	138 ④	138 ④	138 ④
Normal load break	720	720	720	720	138	138	138

Notes

① Heavy-duty.
② Standard-duty.
③ DC ratings do not apply to NOEM (Normally Open Early Make) and NCLB (Normal Closed Late Break) contact blocks HT8C and HT8D.
④ Maximum make or break volt-amperes at 300V or less.

Dimensions

Approximate Dimensions in Inches (mm)

Momentary Pushbuttons—Non-Illuminated

Back, side and bottom views of pushbutton operator with attached contact blocks.

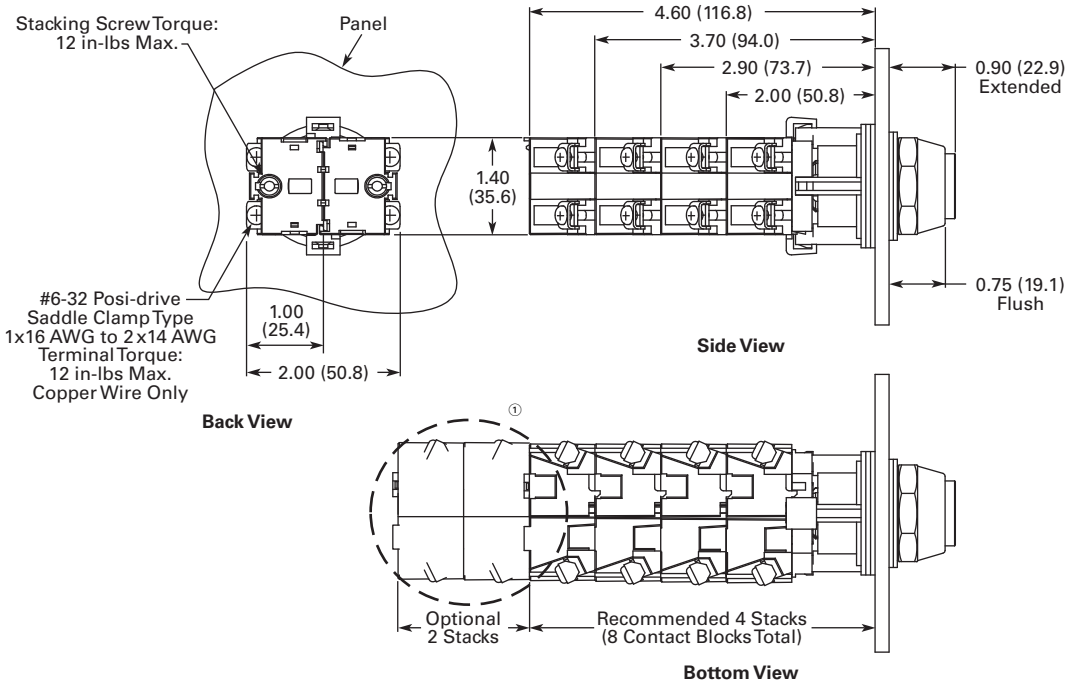

Illuminated Pushbuttons

Back, side and bottom views of pushbutton operator with attached contact blocks.

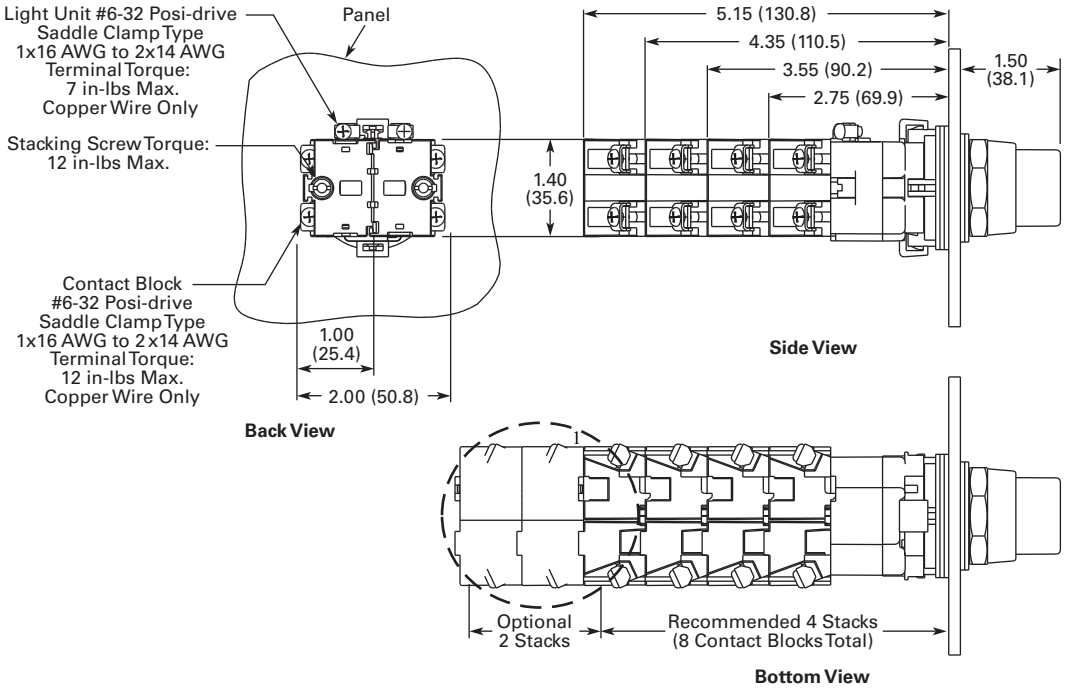

Note

① Recommended maximum of four tandem stacks of contact blocks behind operator. At users' discretion, two additional tandem stacks may be added.

1

Approximate Dimensions in Inches (mm)

Mushroom Head Pushbuttons and Round Head MRH Push-Pull Operators

Back, side and bottom views of mushroom head operator with attached contact blocks.

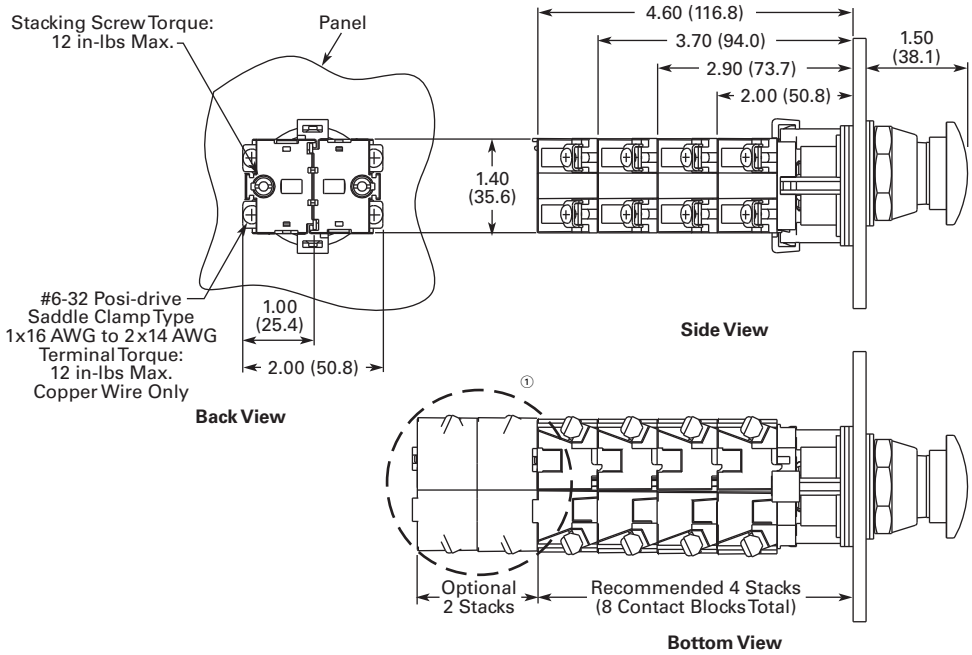

Illuminated and Non-Illuminated Flat Head MRH Push-Pull Operators

Back, side and bottom views of push-pull operator with attached contact blocks.

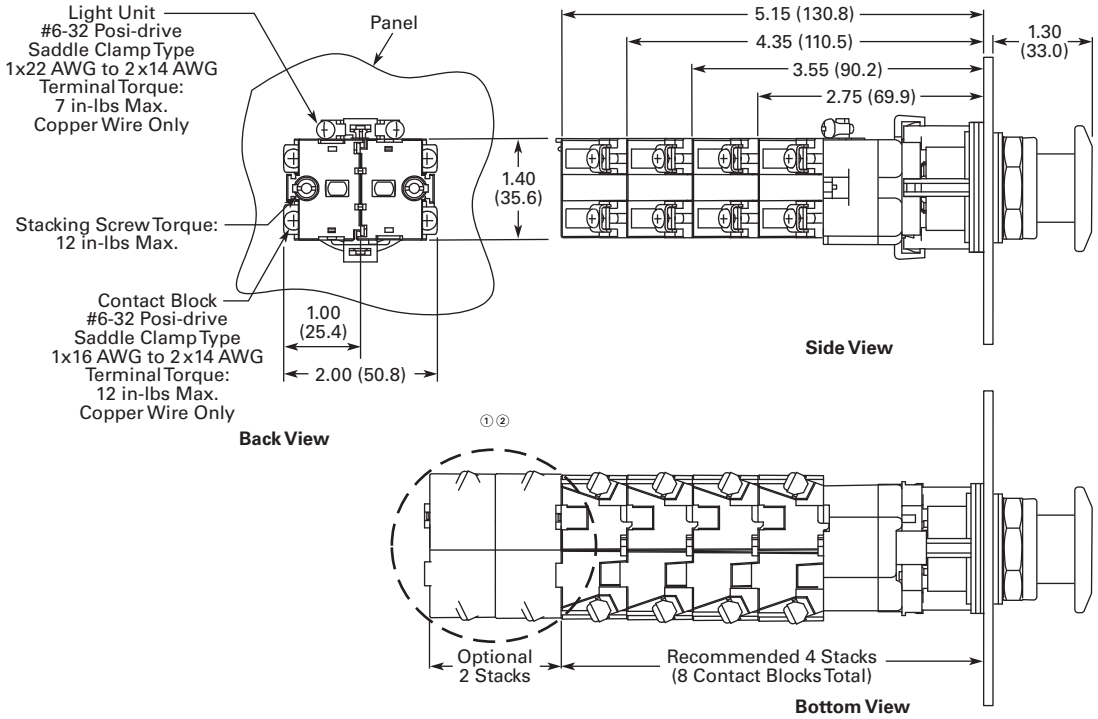

Notes

① Recommended maximum of four tandem stacks of contact blocks behind operator. At users' discretion, two additional tandem stacks may be added.

② Contact blocks mount directly to operator adaptor in non-illuminated version.

Approximate Dimensions in Inches (mm)

Indicating Lights

Back, side and bottom views of indicating light operator with attached contact blocks.

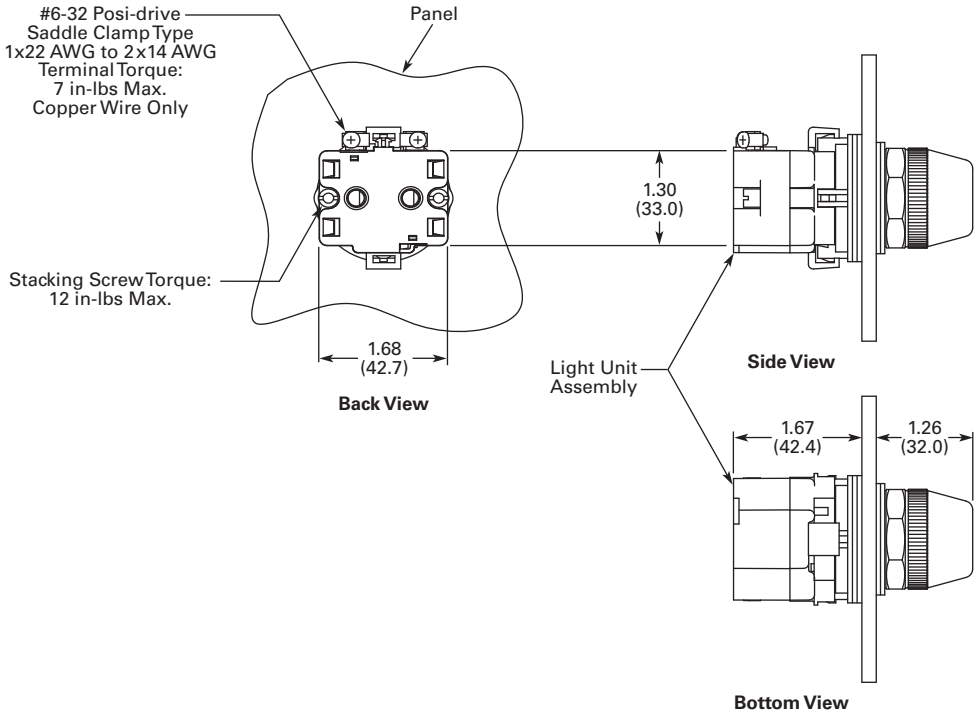

Selector Switches

Back, side and bottom views of selector switch operator with attached contact blocks.

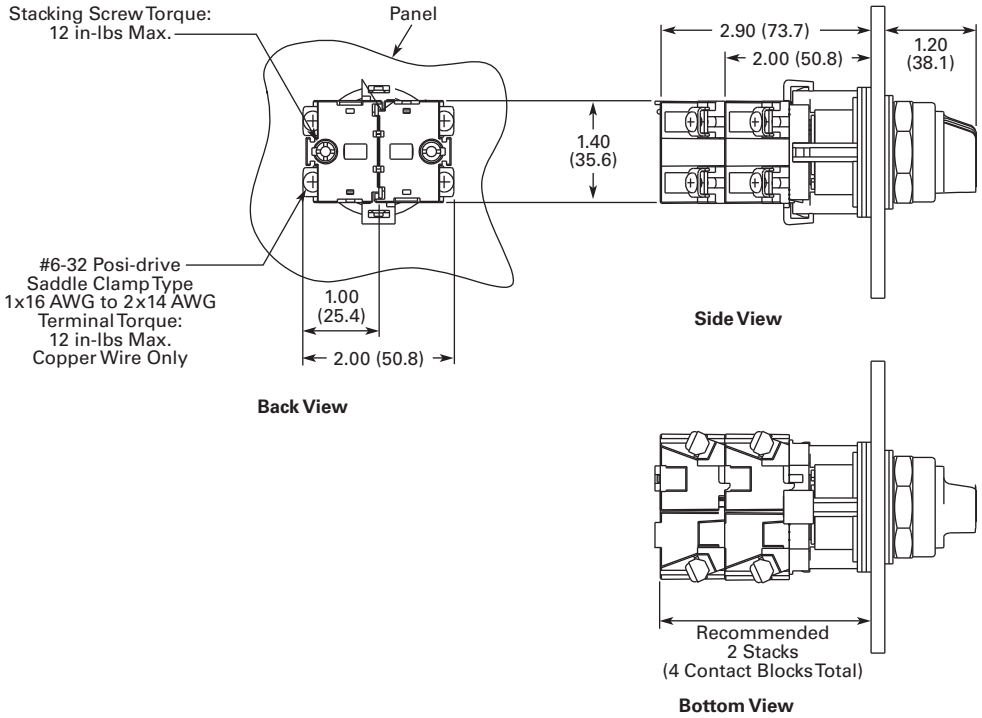

1

Approximate Dimensions in Inches (mm)

Mounting Matrix and Minimum Panel Spacing Requirements

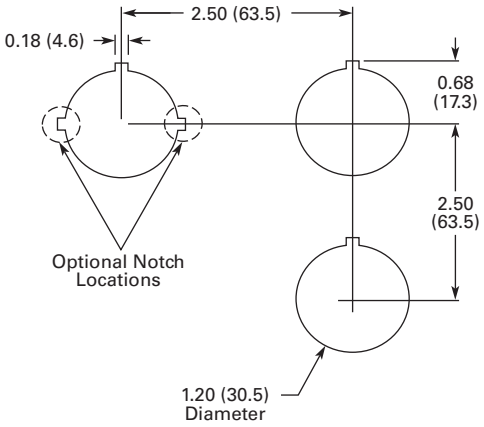

Legend Plates

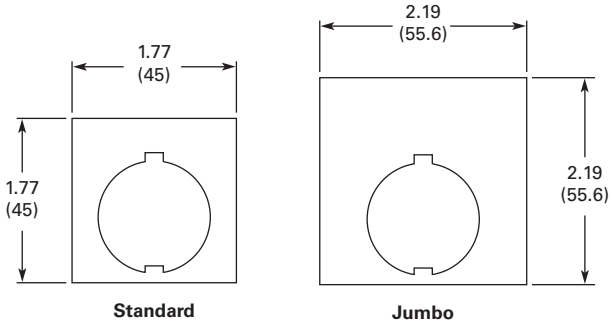

30.5 mm Class I Division 2 Hazardous Locations—10250T/E34

Contents

Description	*Page*
30.5 mm Class I Division 2 Hazardous Locations—10250T/E34	
Product Overview	**V7-T1-352**
Product Identification	**V7-T1-353**
Catalog Number Selection	**V7-T1-353**
Product Selection	
Momentary Pushbutton Units	**V7-T1-354**
Non-Illuminated Pushbutton Units	**V7-T1-358**
Illuminated Pushbutton Units	**V7-T1-360**
Guarded Illuminated Pushbutton Units	**V7-T1-361**
Indicating Light Units	**V7-T1-362**
Illuminated Pushbuttons and Indicating Lights	**V7-T1-363**
Push-Pull Units	**V7-T1-365**
Illuminated Push-Pull Units	**V7-T1-367**
Push-Pull Operators	**V7-T1-370**
Selector Switch Units	**V7-T1-374**
Selector Switch Selection	**V7-T1-376**
Selector Switch Operators	**V7-T1-379**
Illuminated Selector Switch Operators	**V7-T1-382**
Options	**V7-T1-384**
Technical Data and Specifications	**V7-T1-387**
Dimensions	**V7-T1-389**
Ratings	**V7-T1-390**

Product Description

All the Industry-Proven Quality of Eaton's 10250T and E34 Series of Logic Devices, plus Class I Division 2 Certification

The **10250T1H** consists of a normally open-normally closed factory sealed contact block that is UL Listed for use in Class I, Division 2, Groups B, C and D (NEC 500–503)—Class I, Zone 2, IIB + H2 (NEC 505) hazardous locations and is rated for both NEMA A600 and NEMA Q300. 10250T and E34 illuminated components have also been UL Listed for use in Class I, Division 2, Groups B, C and D (NEC 500–503)—Class I, Zone 2, IIB + H2 (NEC 505).

This, combined with the industry-proven Eaton 10250T 30.5 mm pushbutton line, offers a complete solution to Division 2 hazardous location requirements.

Single composite catalog numbers for complete assembled stations and operators for use in Division 2 hazardous locations are featured throughout this section.

Features

- Factory sealed contact blocks
- Heavy-duty zinc die cast construction
- NEMA rated 1, 2, 3, 3R, 4, 4X, 12, 13
- Front-of-panel drainage holes
- Grounding nibs on the operator casing
- Solid thermosetting cathodic epoxy coating on E34
- Corrosion resistance in E34

Benefits

- Pushbutton for hazardous locations
- Drainage holes prevent buildup of liquid inside the operator which can prevent operation in freezing environments
- Grounding nibs bite through paint and other coatings to provide secure ground
- Suitable for corrosive environments (E34 only)
- Earth terminal provides additional grounding point and allows for daisy chain grounding (E34 line)

Standards and Certifications

- UL 508—File No. E131568
- UL 1604—File No. E10323
- CSA Certified C22.2 No.14—File No. LR 68551
- CSA Certified C22.2 No. 213-M1987—File No. LR 20713

Ingress Protection

- Standard indicating lights
  - UL (NEMA) Type 3, 3R, 3S, 4, 4X, 12, 13
  - IEC IP65
- All other operators
  - UL (NEMA) Type 3, 3R, 4, 4X, 12, 13
  - IEC IP65

1

Product Overview

Operator

The 30.5 mm 10250T pushbutton line features a zinc die cast construction with chrome-plated housing and mounting nut.

Eaton's E34 Series 30.5 mm pushbutton line features the same rugged die cast construction of our 10250T line with an additional two-layer 100% solid thermosetting cathodic epoxy coating. This coating provides a flat black smooth, consistent, corrosion resistant surface that has passed a demanding 600 hour salt spray test. (The industry standard for this 4X test requires only 200 hours.)

Ultraviolet Light

E34 epoxy coating is not recommended for use in applications where exposure to ultraviolet light exists—use NEMA 4X 10250T operators.

Ratings

Our Class I Division 2 line of pushbuttons are UL Listed (NEMA type) 1, 2, 3, 3R, 4, 4X, 12 and 13. Our Class I Division 2 E34 line meets IEC 947-1 IP66 standards and the cathodic coating meets FDA 3A sanitary chemical resistance requirements. For a complete listing of all applicable ratings see **Pages V7-T1-387** to **V7-T1-388.**

10250T Grounding Nibs

10250T line operators have "grounding nibs"—four metal points on the operator casting designed to bite through most paints and other coatings on metal panels to enhance the grounding connection when the operator is securely tightened.

10250T Grounding Nibs

E34 Grounding Nibs

E34 line of operators is equipped with a ground screw terminal as part of its die cast construction. This earthing terminal provides an easily accessible point for grounding operators when used in a painted or nonmetallic enclosure and eliminates the need for extra kits when daisy chain grounding is required.

E34 Grounding Nibs

Diaphragm Seal with Drainage Holes

Liquid Drainage

Eaton's pushbutton operators offer front of panel drainage via holes in the operator bushing. Hidden from view by the mounting nut, these holes prevent buildup of liquid inside the operator, which can prevent operation in freezing environments. The holes also provide a route for escaping liquid in high pressure washdowns, effectively relieving pressure from the internal diaphragm seal, ensuring reliable sealing in applications even beyond NEMA 4.

Diaphragm Seal

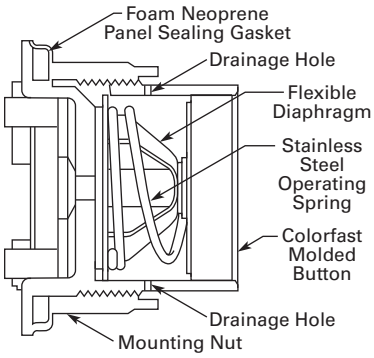

Product Identification

30.5 mm Class I Division 2 Hazardous Locations

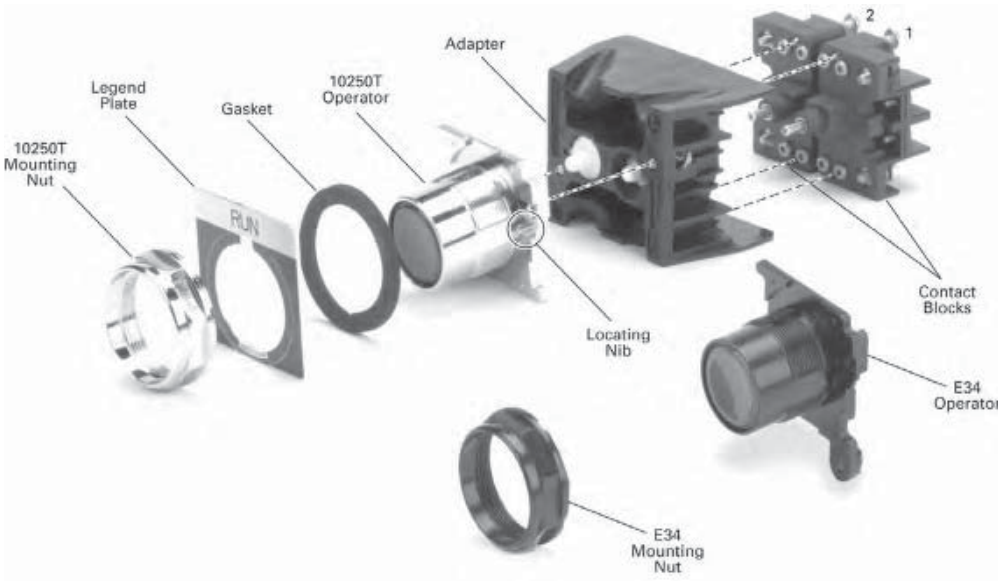

Catalog Number Selection

Catalog Number Selection is for illustrative purposes only and not to be used to create new catalog numbers.

Non-Illuminated Assembled Operators

10250T 718 E J

Operator Type	
10250T =	Heavy-duty oiltight
E34EX =	Corrosion resistant oiltight

Operator and Contact Block			
706 =	Flush 1NO-1NC	**722** =	2P SS MT X0,0X-CAM1
707 =	Flush 2NO-2NC	**723** =	2P SS MT X0,0X,X0,0X-CAM1
708 =	Extended 1NO-1NC	**724** =	2P SS SPR-R X0,0X-CAM1
709 =	Extended 2NO-2NC	**725** =	2P SS SPR-R X0,0X,X0,0X-CAM1
710 =	Mushroom 1NO-1NC	**726** =	3P SS MT X00,00X-CAM3
711 =	Mushroom 2NO-2NC	**727** =	3P SS MT X00,0X0,00X-CAM3
712 =	JMB mushroom 1NO-1NC	**728** =	3P SS SPR-L X00,00X-CAM3
713 =	JMB mushroom 2NO-2NC	**729** =	3P SS SPR-L X00,0X0,00X-CAM3
714 =	2P MT push-pull 1NO-1NC	**730** =	3P SS SPR-L&R X00,00X-CAM3
715 =	2P MT push-pull 2NO-2NC	**731** =	3P SS SPR-L&R X00,0X0,00X-CAM3
716 =	3P MT push-mom pull 1NO-1NC	**732** =	3P SS SPR-R X00,00X-CAM3
717 =	3P MT push-mom pull 2NO-2NC	**733** =	3P SS SPR-R X00,0X0,00X-CAM3
718 =	3P mom push-pull 1NO-1NC	**743** =	4P SS MT X000,0X00,00X0,000X-CAM7
721 =	3P mom push-pull 2NO-2NC		

Button Color	
B =	Black
R =	Red
G =	Green
Y =	Yellow
W =	White
L =	Blue
N =	Orange
E =	Red EMERG. STOP
T =	Keyed-SS

ACC/SS Type	
Blank =	None
J =	JMB push-pull
B =	Booted-FL/EXT
G =	Guarded-FL
K =	Knob-SS
L =	Lever-SS
A =	Lever W/IP-SS
C =	Coin-SS
	Keyed-SS

Cam
1
2
3
7

Key Removal	
1 =	RT only
2 =	LT only
3 =	RT and LT
4 =	CT only
5 =	RT and CT
6 =	LT and CT
7 =	All

1

Product Selection

Momentary Pushbutton Units

UL (NEMA) Type 3, 3R, 4, 4X, 12, 13, NEC Class I Division 2, Groups B, C and D

10250T Flush Button

E34 Flush Button

10250T Extended Button

E34 Extended Button

Non-Illuminated Flush and Extended Pushbuttons

Contact Type	Button Color ①	Flush Button 10250T Catalog Number	Flush Button E34 Catalog Number	Extended Button 10250T Catalog Number	Extended Button E34 Catalog Number
1NO-1NC	Black	**10250T706B**	**E34EX706B**	**10250T708B**	**E34EX708B**
	Red	**10250T706R**	**E34EX706R**	**10250T708R**	**E34EX708R**
	Green	**10250T706G**	**E34EX706G**	**10250T708G**	**E34EX708G**
2NO-2NC	Black	**10250T707B**	**E34EX707B**	**10250T709B**	**E34EX709B**
	Red	**10250T707R**	**E34EX707R**	**10250T709R**	**E34EX709R**
	Green	**10250T707G**	**E34EX707G**	**10250T709G**	**E34EX709G**

Color Selection

Color	Suffix Code	Color	Suffix Code
Black	**B**	White	**W**
Red	**R**	Blue	**L** ②
Green	**G**	Orange ③	**N**
Yellow	**Y**	Red (EMERG. STOP) ④	**E**

Notes

Use NEMA 4X 10250T operators where exposed to ultraviolet light.

① To order different color guarded button, simply substitute the underlined character in catalog number with appropriate suffix code from Color Selection table above. Example: 10250T710**Y**.

② Blue not available on jumbo mushroom pushbutton.

③ Orange is only available on flush or extended pushbuttons.

④ Red with EMERG. STOP engraved on button head for jumbo mushroom pushbutton only.

UL (NEMA) Type 3, 3R, 4, 4X, 12, 13, NEC Class I Division 2, Groups B, C and D

10250T Mushroom Button

E34 Mushroom Button

10250T Jumbo Mushroom Button

E34 Jumbo Mushroom Button

Non-Illuminated Mushroom and Jumbo Mushroom Pushbuttons

		Mushroom Button		Jumbo Mushroom Button	
Contact Type	**Button Color** ①	**10250T Catalog Number**	**E34 Catalog Number**	**10250T** ② **Catalog Number**	**E34** ② **Catalog Number**
1NO-1NC	Black	**10250T710B**	**E34EX710B**	**10250T712B**	**E34EX712B**
	Red	**10250T710R**	**E34EX710R**	**10250T712R**	**E34EX712R**
	Green	**10250T710G**	**E34EX710G**	**10250T712G**	**E34EX712G**
2NO-2NC	Black	**10250T711B**	**E34EX711B**	**10250T713B**	**E34EX713B**
	Red	**10250T711R**	**E34EX711R**	**10250T713R**	**E34EX713R**
	Green	**10250T711G**	**E34EX711G**	**10250T713G**	**E34EX713G**

Color Selection

Color	Suffix Code	Color	Suffix Code
Black	**B**	White	**W**
Red	**R**	Blue	**L** ③
Green	**G**	Orange ④	**N**
Yellow	**Y**	Red (EMERG. STOP) ⑤	**E**

Notes

Use NEMA 4X 10250T operators where exposed to ultraviolet light.

① To order different color guarded button, simply substitute the underlined character in catalog number with appropriate suffix code from Color Selection table above. Example: 10250T710**Y**.

② Anodized aluminum head is not suitable for use in ultraviolet applications.

③ Blue not available on jumbo mushroom pushbutton.

④ Orange is only available on flush or extended pushbuttons.

⑤ Red with EMERG. STOP engraved on button head for jumbo mushroom pushbutton only.

UL (NEMA) Type 3, 3R, 4, 4X, 12, 13, NEC Class I Division 2, Groups B, C and D

- Momentary contact
- Non-illuminated
- Booted or guarded

Booted Flush Button

Booted Extended Button

Guarded Extended Button

10250T Pushbuttons Booted and Guarded

Contact Type	Button Color	Booted Flush Button Catalog Number	Booted Extended Button Catalog Number	Guarded Extended Button ① Catalog Number
1NO-1NC	Black	**10250T706BB**	**10250T708BB**	**10250T706BG**
	Red	**10250T706RB** ②	**10250T708RB**	**10250T706RG**
	Green	**10250T706GB**	**10250T708GB**	**10250T706GG**
2NO-2NC	Black	**10250T707BB**	**10250T709BB**	**10250T707BG**
	Red	**10250T707RB** ②	**10250T709RB**	**10250T707RG**
	Green	**10250T707GB**	**10250T709GB**	**10250T707GG**

Color Selection

Color	Suffix Code	Color	Suffix Code
Black	**B**	White	**W**
Red	**R**	Blue	**L**
Green	**G**	Orange	**N**
Yellow	**Y**		

Notes

Use NEMA 4X 10250T operators where exposed to ultraviolet light.

① To order different color guarded button, simply substitute the underlined character in catalog number with appropriate suffix code from Color Selection table above. Example: 10250T706**Y**G.

② Red booted flush pushbutton is not recommended for STOP function.

UL (NEMA) Type 3, 3R, 4, 4X, 12, 13, NEC Class I Division 2, Groups B, C and D

- Momentary contact
- Non-illuminated
- Booted or guarded

Booted Flush Button

Booted Extended Button

Guarded Extended Button

E34 Pushbuttons Booted and Guarded

Contact Type	Button Color	Booted Flush Button Catalog Number	Booted Extended Button Catalog Number	Guarded Extended Button ① Catalog Number
1NO-1NC	Black	**E34EX706BB**	**E34EX708BB**	**E34EX706BG**
	Red	**E34EX706RB** ②	**E34EX708RB**	**E34EX706RG**
	Green	**E34EX706GB**	**E34EX708GB**	**E34EX706GG**
2NO-2NC	Black	**E34EX707BB**	**E34EX709BB**	**E34EX707BG**
	Red	**E34EX707RB** ②	**E34EX709RB**	**E34EX707RG**
	Green	**E34EX707GB**	**E34EX709GB**	**E34EX707GG**

Color Selection

Color	Suffix Code	Color	Suffix Code
Black	**B**	White	**W**
Red	**R**	Blue	**L**
Green	**G**	Orange	**N**
Yellow	**Y**		

Notes

Use NEMA 4X 10250T operators where exposed to ultraviolet light.

① To order different color guarded button, simply substitute the underlined character in catalog number with appropriate suffix code from Color Selection table above. Example: 10250T706**Y**G.

② Red booted flush pushbutton is not recommended for STOP function.

1

Non-Illuminated Pushbutton Units

UL (NEMA) Type 3, 3R, 4, 4X, 12, and 13

10250T Flush Button

E34 Flush Button

10250T Extended Button

E34 Extended Button

10250T Half Shrouded Button

E34 Half Shrouded Button

Non-Illuminated Pushbuttons, Momentary Contact

	Flush Button		Extended Button		Half Shrouded Button 10250T		Half Shrouded Button E34	
Color	10250T ① Catalog Number	E34 Catalog Number	10250T Catalog Number	E34 Catalog Number	Vertical Catalog Number	Horizontal Catalog Number	Vertical Catalog Number	Horizontal Catalog Number
Black	**10250T101**	**E34PB1**	**10250T111**	**E34EB1**	**10250T501**	**10250T511**	**E34EVB1**	**E34EHB1**
Red	**10250T102**	**E34PB2**	**10250T112**	**E34EB2**	**10250T502**	**10250T512**	**E34EVB2**	**E34EHB2**
Green	**10250T103**	**E34PB3**	**10250T113**	**E34EB3**	**10250T503**	**10250T513**	**E34EVB3**	**E34EHB3**
Yellow	**10250T104**	**E34PB4**	**10250T120**	**E34EB4**	**10250T504**	**10250T514**	**E34EVB4**	**E34EHB4**
Gray	**10250T105**	**E34PB5**	—	**E34EB5**	**10250T505**	**10250T515**	**E34EVB5**	**E34EHB5**
White	**10250T106**	**E34PB6**	**10250T116**	**E34EB6**	**10250T506**	**10250T516**	**E34EVB6**	**E34EHB6**
Blue	**10250T108**	**E34PB7**	**10250T118**	**E34EB7**	**10250T508**	**10250T518**	**E34EVB7**	**E34EHB7**
Orange	**10250T109**	**E34PB8**	**10250T119**	**E34EB8**	**10250T509**	**10250T519**	**E34EVB8**	**E34EHB8**

Notes

Use NEMA 4X 10250T operators where exposed to ultraviolet light.

① To order operator with factory assembled extended retaining nut, 10250TA12, for thick panel applications, add suffix letter **E** to listed catalog number.

UL (NEMA) Type 3, 3R, 4, 4X, 12, and 13

10250T Mushroom Button

E34 Mushroom Button

10250T Jumbo Mushroom Button

E34 Jumbo Mushroom Button

Mushroom Head Non-Illuminated Pushbuttons, Momentary Contact

	Mushroom Button		Anodized Aluminum Jumbo Mushroom Button	
Color	**10250T Catalog Number**	**E34 Catalog Number**	**10250T ① Catalog Number**	**E34 ② Catalog Number**
Black	**10250T121**	**E34LB1**	**10250T171**	**E34JB1**
Red	**10250T122**	**E34LB2**	**10250T172**	**E34JB2**
Red (EMERG. STOP)	—	—	**10250T17213**	**E34JB2N8**
Green	**10250T123**	**E34LB3**	**10250T173**	**E34JB3**
Yellow	**10250T124**	**E34LB4**	**10250T174**	**E34JB4**
Blue	**10250T129**	**E34LB6**	—	—

Notes

Use NEMA 4X 10250T operators where exposed to ultraviolet light.

① Anodized aluminum head is not suitable for use in ultraviolet light applications.

② Anodized aluminum head may not be suitable for some corrosive environments.

1

Illuminated Pushbutton Units

UL (NEMA) Type 3, 3R, 4, 4X, 12, 13, NEC Class I Division 2, Groups B, C and D

- Momentary contact
- Illuminated
- Plastic lenses

10250T8_

E34EX8_

Illuminated Pushbuttons

Type	Voltage	Color	Contact	10250T LED/Lamp Number	Catalog Number ①	E34 LED/Lamp Number	Catalog Number ①
LED Lamp							
Full voltage	24 Vac/Vdc	Red	1NO-1NC	Bayonet base	**10250T828RD24**	Bayonet base	**E34EX828RD24**
		Green			**10250T828GD24**		**E34EX828GD24**
		Amber			**10250T828AD24**		**E34EX828AD24**
	120 Vac	Red	1NO-1NC		**10250T828RD2A**		**E34EX828RD2A**
		Green			**10250T828GD2A**		**E34EX828GD2A**
		Amber			**10250T828AD2A**		**E34EX828AD2A**
Transformer	120 Vac	Red	1NO-1NC		**10250T802RD06**	Bayonet base 6 Vac	**E34EX802RD06**
		Green			**10250T802GD06**		**E34EX802GD06**
		Amber			**10250T802AD06**		**E34EX802AD06**
Incandescent Lamp							
Full voltage	24 Vac/Vdc	Red	1NO-1NC	#757	**10250T818RD**	#757	**E34EX818RD**
		Green			**10250T818GD**		**E34EX818GD**
		Amber			**10250T818AD**		**E34EX818AD**
Resistor	120 Vac/Vdc	Red	1NO-1NC	120MB	**10250T824RD**	120MB	**E34EX824RD**
		Green			**10250T824GD**		**E34EX824GD**
		Amber			**10250T824AD**		**E34EX824AD**
Transformer	120 Vac	Red	1NO-1NC	#755	**10250T802RD**	#755 6 Vac	**E34EX802RD**
		Green			**10250T802GD**		**E34EX802GD**
		Amber			**10250T802AD**		**E34EX802AD**

10250TC_

E34V _

Lens Selection

Color	Suffix Code	Catalog Number	Color	Suffix Code	Catalog Number
10250T			**E34**		
Red	**R**	**10250TC21**	Red	**R**	**E34V2**
Green	**G**	**10250TC22**	Green	**G**	**E34V3**
Yellow	**Y**	**10250TC23**	Yellow	**Y**	**E34V4**
Amber	**A**	**10250TC43**	Amber	**A**	**E34V9**
Blue	**L**	**10250TC24**	Blue	**L**	**E34V6**
Clear	**C**	**10250TC25**	Clear	**C**	**E34V0**
White	**W**	**10250TC26**	White	**W**	**E34V5**

Note

① To order different color lens, simply substitute the underlined character in the catalog number with appropriate suffix code from Lens Selection table above. Example: 10250T828**Y**D24.

Guarded Illuminated Pushbutton Units

UL (NEMA) Type 3, 3R, 4, 4X, 12, 13, NEC Class I Division 2, Groups B, C and D

- Momentary contact
- Guarded illuminated
- Plastic lenses

10250T8_

E34EX8_

Guarded Illuminated Pushbuttons

Type	Voltage	Color	Contact	10250T LED/Lamp Number	Catalog Number ①	E34 LED/Lamp Number	Catalog Number ①
LED Lamp							
Full voltage	24 Vac/Vdc	Red	1NO-1NC	Bayonet base	**10250T828RG24**	Bayonet base	**E34EX828RG24**
		Green			**10250T828GG24**		**E34EX828GG24**
		Amber			**10250T828AG24**		**E34EX828AG24**
	120 Vac	Red	1NO-1NC		**10250T828RG2A**		**E34EX828RG2A**
		Green			**10250T828GG2A**		**E34EX828GG2A**
		Amber			**10250T828AG2A**		**E34EX828AG2A**
Transformer	120 Vac	Red	1NO-1NC		**10250T802RG06**		**E34EX802RG06**
		Green			**10250T802GG06**		**E34EX802GG06**
		Amber			**10250T802AG06**		**E34EX802AG06**
Incandescent Lamp							
Full voltage	24 Vac/Vdc	Red	1NO-1NC	#757	**10250T818RG**	#757	**E34EX818RG**
		Green			**10250T818GG**		**E34EX818GG**
		Amber			**10250T818AG**		**E34EX818AG**
Resistor	120 Vac/Vdc	Red	1NO-1NC	120MB	**10250T824RG**	120MB	**E34EX824RG**
		Green			**10250T824GG**		**E34EX824GG**
		Amber			**10250T824AG**		**E34EX824AG**
Transformer	120 Vac	Red	1NO-1NC	#755	**10250T802RG**	#755 6 Vac	**E34EX802RG**
		Green			**10250T802GG**		**E34EX802GG**
		Amber			**10250T802AG**		**E34EX802AG**

10250TC2_

E34V_

Lens Selection

Color	Suffix Code	Catalog Number	Color	Suffix Code	Catalog Number
10250T			**E34**		
Red	**R**	**10250TC21**	Red	**R**	**E34V2**
Green	**G**	**10250TC22**	Green	**G**	**E34V3**
Yellow	**Y**	**10250TC23**	Yellow	**Y**	**E34V4**
Amber	**A**	**10250TC43**	Amber	**A**	**E34V9**
Blue	**L**	**10250TC24**	Blue	**L**	**E34V6**
Clear	**C**	**10250TC25**	Clear	**C**	**E34V0**
White	**W**	**10250TC26**	White	**W**	**E34V5**

Note

① To order different color lens, simply substitute the underlined character in the catalog number with appropriate suffix code from Lens Selection table above. Example: 10250T828**Y**D24.

1

Indicating Light Units

UL (NEMA) Type 3, 3R, 3S, 4, 4X, 12, 13, NEC Class I Division 2, Groups B, C and D

- Standard
- Plastic lenses

10250T_

E34_

Indicating Lights

Type	Voltage	Color	LED/Lamp Number	10250T Catalog Number ①	E34 Catalog Number ①
LED Lamp					
Full voltage	24 Vac/Vdc	Red	Bayonet base	**10250T197HLRP24**	**E34FB197HLRP24**
		Green		**10250T197HLGP24**	**E34FB197HLGP24**
		Amber		**10250T197HLAP24**	**E34FB197HLAP24**
	120 Vac	Red		**10250T197HLRP2A**	**E34FB197HLRP2A**
		Green		**10250T197HLGP2A**	**E34FB197HLGP2A**
		Amber		**10250T197HLAP2A**	**E34FB197HLAP2A**
Transformer	120 Vac	Red		**10250T181HLRP06**	**E34TB120HLRP06**
		Green		**10250T181HLGP06**	**E34TB120HLGP06**
		Amber		**10250T181HLAP06**	**E34TB120HLAP06**
Incandescent Lamp					
Full voltage	24 Vac/Vdc	Red	#757	**10250T206HRP**	**E34FB24HRP**
		Green		**10250T206HGP**	**E34FB24HGP**
		Amber		**10250T206HAP**	**E34FB24HAP**
Resistor	120 Vac/Vdc	Red	120MB	**10250T201HRP**	**E34RB120HRP**
		Green		**10250T201HGP**	**E34RB120HGP**
		Amber		**10250T201HAP**	**E34RB120HAP**
Transformer	120 Vac	Red	#755	**10250T181HRP**	**E34TB120HRP**
		Green		**10250T181HGP**	**E34TB120HGP**
		Amber		**10250T181HAP**	**E34TB120HAP**

Plastic

Glass

Lens Selection

Color	Plastic Suffix Code	Plastic Catalog Number	Glass Suffix Code	Glass Catalog Number	Color	Plastic Suffix Code	Plastic Catalog Number	Glass Suffix Code	Glass Catalog Number
10250T					**E34**				
Red	**RP**	**10250TC1N**	**RG**	**10250TC7N**	Red	**RP**	**E34H2**	**RG**	**E34G2**
Green	**GP**	**10250TC2N**	**GG**	**10250TC8N**	Green	**GP**	**E34H3**	**GG**	**E34G3**
Amber	**AP**	**10250TC19N**	**AG**	**10250TC9N**	Amber	**AP**	**E34H9**	**AG**	**E34G9**
Yellow	**YP**	**10250TC3N**	—	—	Yellow	**YP**	**E34H4**	**YG**	**E34G4**
Blue	**LP**	**10250TC4N**	**LG**	**10250TC10N**	Blue	**LP**	**E34H6**	**LG**	**E34G6**
Clear	**CP**	**10250TC5N**	**CG**	**10250TC11N**	Clear	**CP**	**E34H0**	**CG**	**E34G0**
White	**WP**	**10250TC6N**	**WG**	**10250TC12N**	White	**WP**	**E34H5**	**WG**	**E34G5**

Notes

Use NEMA 4X 10250T operators where exposed to ultraviolet light.

① To order different color lens, simply substitute the underlined characters in the catalog number with appropriate suffix code from the Lens Selection table above. Example: 10250T201HYP.

Illuminated Pushbuttons and Indicating Lights

NEC Class I Division 2, Groups B, C and D

10250T Illuminated Pushbutton

E34 Illuminated Pushbutton

10250T Indicating Light

E34 Indicating Light

Operators without Lenses

Type	Voltage	LED/Lamp Number	Illuminated Pushbutton 10250T Catalog Number	Illuminated Pushbutton E34 Catalog Number	Indicating Light 10250T Catalog Number	Indicating Light E34 Catalog Number
LED Light Unit Type (LEDs not included) ①						
Full voltage	—	Bayonet base	**10250T397HL**	**E34CB497HL**	**10250T197HL**	**E34FB197HL**
Transformer AC only	24		**10250T416HL**	**E34XB024HL**	—	—
	120		**10250T411HL**	**E34XB120HL**	**10250T181HL**	**E34TB120HL**
	240		**10250T412HL**	**E34XB240HL**	**10250T182HL**	**E34TB240HL**
	277		**10250T419HL**	**E34XB277HL**	**10250T198HL**	**E34TB277HL**
	380		**10250T413HL**	**E34XB380HL**	**10250T183HL**	**E34TB380HL**
	480		**10250T414HL**	**E34XB480HL**	**10250T184HL**	**E34TB480HL**
	600		**10250T415HL**	**E34XB600HL**	**10250T185HL**	**E34TB600HL**
Incandescent Light Unit Type						
Full voltage AC/DC	6	#755	**10250T473H**	**E34CB06H**	**10250T203H**	**E34FB06H**
	12	#756	**10250T474H**	**E34CB12H**	**10250T204H**	**E34FB12H**
	24	#757	**10250T476H**	**E34CB24H**	**10250T206H**	**E34FB24H**
	32	#1828	**10250T477H**	**E34CB32H**	**10250T207H**	**E34FB32H**
	48	#1835	**10250T478H**	**E34CB48H**	**10250T208H**	**E34FB48H**
Resistor ② AC/DC	120	120MB	**10250T471H**	**E34SB120H**	**10250T201H**	**E34RB120H**
	240	120MB	**10250T472H**	**E34SB240H**	**10250T202H**	**E34RB240H**
Transformer AC only	24	#755	**10250T416H**	**E34XB024H**	—	—
	120		**10250T411H**	**E34XB120H**	**10250T181H**	**E34TB120H**
	240		**10250T412H**	**E34XB240H**	**10250T182H**	**E34TB240H**
	277		**10250T419H**	**E34XB277H**	**10250T198H**	**E34TB277H**
	380		**10250T413H**	**E34XB380H**	**10250T183H**	**E34TB380H**
	480		**10250T414H**	**E34XB480H**	**10250T184H**	**E34TB480H**
	600		**10250T415H**	**E34XB600H**	**10250T185H**	**E34TB600H**
Neon AC/DC	120	NE51H-R-22	—	—	**10250T226H**	**E34NB120H**
	240	NE51H-4-68	—	—	**10250T227H**	**E34NB240H**

Notes

Use NEMA 4X 10250T operators where exposed to ultraviolet light.

① These units do not include lamps. Order LED separately to match lens color from the LED Selection table on **Page V7-T1-373.**

② Resister units are not available for use with LEDs, choose either transformer or full voltage LED style.

Indicating Light Lenses

Plastic

*10250TC_*

*E34H_*

Glass

*10250TC_*

*E34G_*

Color	10250T Catalog Number	E34 Catalog Number
Plastic		
Red	**10250TC1N**	**E34H2**
Green	**10250TC2N**	**E34H3**
Amber	**10250TC19N**	**E34H9**
Yellow	**10250TC3N**	**E34H4**
Blue	**10250TC4N**	**E34H6**
Clear	**10250TC5N**	**E34H0**
White	**10250TC6N**	**E34H5**
Glass		
Red	**10250TC7N**	**E34G2**
Green	**10250TC8N**	**E34G3**
Amber	**10250TC9N**	**E34G9**
Yellow	—	**E34G4**
Blue	**10250TC10N**	**E34G6**
Clear	**10250TC11N**	**E34G0**
White	**10250TC12N**	**E34G5**

Illuminated Pushbutton Lenses

10250TC_

E34V_

Color	10250T Catalog Number	E34 Catalog Number
Red	**10250TC21**	**E34V2**
Green	**10250TC22**	**E34V3**
Yellow	**10250TC23**	**E34V4**
Amber	**10250TC43**	**E34V9**
Blue	**10250TC24**	**E34V6**
Clear	**10250TC25**	**E34V0**
White	**10250TC26**	**E34V5**

Push-Pull Units

UL (NEMA) Type 3, 3R, 4, 4X, 12, 13, NEC Class I Division 2, Groups B, C and D

- Two- and three-position
- Non-illuminated

10250T71_

E34EX71_

Two-Position Maintained Push, Maintained Pull

Operator Function (Position) ①

Maintained—Pull	Maintained—Push	Contact Type	Mounting Location ① 1	Mounting Location ① 2	Red Standard Push-Pull ② 10250T Catalog Number	Red Standard Push-Pull ② E34 Catalog Number
0 X	X 0	1NO 1NC			**10250T714R**	**E34EX714R**
0 X 0 X	X 0 X 0	2NO 2NC			**10250T715R**	**E34EX715R**

10250T71_

E34EX71_

Three-Position Maintained Push, Momentary Pull

Operator Function (Position) ①

Momentary—Pull	Maintained—Intermediate	Maintained—Push	Contact Type	Mounting Location ① 1	Mounting Location ① 2	Red Standard Push-Pull ③ 10250T Catalog Number	Red Standard Push-Pull ③ E34 Catalog Number
0 X	0 0	X 0	1NO 1NC			**10250T716R**	**E34EX716R**
X X	0 X	0 0	1NC 1NC			**10250T717R**	**E34EX717R**

Notes

① Bolded circuit corresponds to "X-O" circuit selection. X = closed circuit, O = open circuit.

② To order different type or color buttons, simply substitute underlined character with appropriate suffix code from the Button and Color Selection table on **Page V7-T1-366**. Example: 10250T714**G**.

③ To order different type or color buttons, simply substitute underlined character with appropriate suffix code from the Button and Color Selection table on **Page V7-T1-366**. Example: 10250T716**G**.

1

UL (NEMA) Type 3, 3R, 4, 4X, 12, 13, NEC Class I Division 2, Groups B, C and D

- Two- and three-position
- Non-illuminated

10250T7_

E34EX7_

Three-Position Momentary Push, Momentary Pull

Operator Function (Position) ①

Momentary—Pull	Maintained—Intermediate	Momentary—Push	Contact Type	Mounting Location ① 1	Mounting Location ① 2	Red Standard Push-Pull ② 10250T Catalog Number	Red Standard Push-Pull ② E34 Catalog Number
0 X	0 0	X 0	1NO 1NC			**10250T718R**	**E34EX718R**
X X	0 X	0 0	1NC 1NC			**10250T721R**	**E34EX721R**

Button and Color Selection

Standard

Jumbo Mushroom Head

Color	Suffix Code	10250T Catalog Number	E34 Catalog Number
Standard			
Red	**R**	**10250TB62**	**E34C2**
Red (EMERG. STOP)	**E**	**10250TB63**	**E34C2N8**
Green	**G**	**10250TB61**	**E34C3**
Black	**B**	**10250TB60**	**E34C1**
Blue	**L**	**10250TB64**	**E34C6**
Jumbo Mushroom Head (Anodized) Aluminum			
Red	**RJ**	**10250TJ62**	**E34J2**
Red (EMERG. STOP)	**EJ**	**10250TJ63**	**E34J2N8**
Green	**GJ**	**10250TJ61**	—
Black	**BJ**	**10250TJ60**	—
Yellow	**YJ**	**10250TJ64**	—

Notes

① Bolded circuit corresponds to "X-0" circuit selection. X = closed circuit, 0 = open circuit.

② To order different type or color buttons, simply substitute underlined character with appropriate suffix code from the Button and Color Selection table above. Example: 10250T718**G**.

Illuminated Push-Pull Units

UL (NEMA) Type 3, 3R, 4, 4X, 12, 13, NEC Class I Division 2, Groups B, C and D

- Two-position maintained
- Illuminated

10250T8_

E34EX8_

Two-Position Illuminated Maintained Push, Maintained Pull

Operator Function (Position) ① Maintained—Pull	Maintained—Push	Type	Voltage	Contact Type	Mounting Location ① 1	2	Red Standard Push-Pull ② 10250T Catalog Number	E34 Catalog Number
LED Lamp								
O	X	Full voltage	24 Vac/Vdc	1NO 1NC			**10250T853RD24**	**E34EX853RD24**
X	O		120 Vac				**10250T853RD2A**	**E34EX853RD2A**
		Transformer	24 Vac				**10250T843RD06**	**E34EX843RD06**
			120 Vac				**10250T844RD06**	**E34EX844RD06**
Incandescent Lamp								
O	X	Full voltage	24 Vac/Vdc	1NO 1NC			**10250T849RD**	**E34EX849RD**
X	O	Resistor	120 Vac/Vdc				**10250T851RD**	**E34EX851RD**
		Transformer	24 Vac				**10250T843RD**	**E34EX843RD**
			120 Vac				**10250T844RD**	**E34EX844RD**

Lens and Color Selection

Standard

Side-Lighted (Anodized) Aluminum

HD Aluminum with Transparent Center

Color	10250T Suffix Code	Catalog Number	E34 Suffix Code	Catalog Number
Standard				
Red	**RD**	**10250TC47**	**RD**	**E34M2**
Red (EMERG. STOP)	**ED**	**10250TC53**	**ED**	**E34M2N8**
Green	**GD**	**10250TC48**	**GD**	**E34M3**
Blue	**LD**	**10250TC49**	**LD**	**E34M6**
Amber	**AD**	**10250TC50**	**AD**	**E34M9**
White	**WD**	**10250TC51**	**WD**	**E34M5**
Clear	**CD**	**10250TC52**	**CD**	**E34M0**
Side-Lighted (Anodized) Aluminum				
Red	**RS**	**10250TC57**	—	—
Red (EMERG. STOP)	**ES**	**10250TC63**	—	—
Green	**GS**	**10250TC58**	—	—
Blue	**LS**	**10250TC59**	—	—
Amber	**AS**	**10250TC64**	—	—
Yellow	**YS**	**10250TC60**		
White	**WS**	**10250TC61**	—	—
Clear	**CS**	**10250TC62**	—	—
Heavy-Duty Aluminum with Transparent Center				
Red	**RH**	**10250TC65**	—	—
Green	**GH**	**10250TC66**	—	—
Amber	**AH**	**10250TC67**	—	—

Notes

① Bolded circuit corresponds to "X-O" circuit selection. X = closed circuit, O = open circuit.

② To order different type or color lens, simply substitute the underlined characters with appropriate suffix code from the Lens and Color Selection table above. Example: 10250T851**GS**.

1

UL (NEMA) Type 3, 3R, 4, 4X, 12, 13, NEC Class I Division 2, Groups B, C and D

- Three-position—maintained push, momentary pull
- Illuminated

10250T8_

E34EX8_

Three-Position Illuminated Maintained Push, Momentary Pull

Operator Function (Position) ①								Red Standard Push-Pull ②	
Momentary—Pull	Maintained—Intermediate	Maintained—Push	Type	Voltage	Contact Type	Mounting Location ① 1	Mounting Location ① 2	10250T Catalog Number	E34 Catalog Number
LED Lamp									
0 X	0 0	X 0	Full voltage	24 Vac/Vdc	1NO 1NC			**10250T864RD24**	**E34EX864RD24**
				120 Vac				**10250T864RD2A**	**E34EX864RD2A**
			Transformer	24 Vac				**10250T854RD06**	**E34EX854RD06**
				120 Vac				**10250T855RD06**	**E34EX855RD06**
X X	0 X	0 0	Full voltage	24 Vac/Vdc	1NC 1NC			**10250T875RD24**	**E34EX875RD24**
				120 Vac				**10250T875RD2A**	**E34EX875RD2A**
			Transformer	24 Vac				**10250T865RD06**	**E34EX865RD06**
				120 Vac				**10250T866RD06**	**E34EX866RD06**
Incandescent Lamp									
0 X	0 0	X 0	Full voltage	24 Vac/Vdc	1NO 1NC			**10250T860RD**	**E34EX860RD**
			Resistor	120 Vac				**10250T862RD**	**E34EX862RD**
			Transformer	24 Vac				**10250T854RD**	**E34EX854RD**
				120 Vac				**10250T855RD**	**E34EX855RD**
X X	0 X	0 0	Full voltage	24 Vac/Vdc	1NC 1NC			**10250T871RD**	**E34EX871RD**
			Resistor	120 Vac				**10250T873RD**	**E34EX873RD**
			Transformer	24 Vac				**10250T865RD**	**E34EX865RD**
				120 Vac				**10250T866RD**	**E34EX866RD**

Notes

① Bolded circuit corresponds to "X-O" circuit selection. X = closed circuit, O = open circuit.

② To order different type or color lens, simply substitute the underlined characters with appropriate suffix code from the Lens and Color Selection table on the bottom of **Page V7-T1-367.** Example: 10250T862**AS**.

UL (NEMA) Type 3, 3R, 4, 4X, 12, 13, NEC Class I Division 2, Groups B, C and D

- Three-position—momentary
- Illuminated

10250T8_

E34EX8_

Three-Position Illuminated Momentary Push, Momentary Pull

Operator Function (Position) ①

Momentary—Pull	Maintained—Intermediate	Maintained—Push	Type	Voltage	Contact Type	Mounting Location ① 1	Mounting Location ① 2	Red Standard Push-Pull ② 10250T Catalog Number	Red Standard Push-Pull ② E34 Catalog Number
LED Lamp									
0	0	X	Full voltage	24 Vac/Vdc	1NO			**10250T886RD24**	**E34EX886RD24**
X	0	0		120 Vac	1NC			**10250T886RD2A**	**E34EX886RD2A**
			Transformer	24 Vac				**10250T876RD06**	**E34EX876RD06**
				120 Vac				**10250T877RD06**	**E34EX877RD06**
X	0	0	Full voltage	24 Vac/Vdc	1NC			**10250T897RD24**	**E34EX897RD24**
X	X	0		120 Vac	1NC			**10250T897RD2A**	**E34EX897RD2A**
			Transformer	24 Vac				**10250T887RD06**	**E34EX887RD06**
				120 Vac				**10250T888RD06**	**E34EX888RD06**
Incandescent Lamp									
0	0	X	Full voltage	24 Vac/Vdc	1NO			**10250T882RD**	**E34EX882RD**
X	0	0	Resistor	120 Vac	1NC			**10250T884RD**	**E34EX884RD**
			Transformer	24 Vac				**10250T876RD**	**E34EX876RD**
				120 Vac				**10250T877RD**	**E34EX877RD**
X	0	0	Full voltage	24 Vac/Vdc	1NC			**10250T893RD**	**E34EX893RD**
X	X	0	Resistor	120 Vac	1NC			**10250T895RD**	**E34EX895RD**
			Transformer	24 Vac				**10250T887RD**	**E34EX887RD**
				120 Vac				**10250T888RD**	**E34EX888RD**

Notes

① Bolded circuit corresponds to "X-0" circuit selection. X = closed circuit, 0 = open circuit.

② To order different type or color lens, simply substitute the underlined characters with appropriate suffix code from the Lens and Color Selection table on the bottom of **Page V7-T1-367.** Example: 10250T862**AS**.

1

Push-Pull Operators

An illuminated push-pull pushbutton unit, arranged for one-hole mounting, can replace two pushbuttons and a pilot light or the non-illuminated form can replace two pushbuttons. These units are available in three basic types:

- **Maintained**—(Two-position). Maintains in the pulled or pushed position until manually actuated to the opposite mode.
- **Momentary**—(Three-position). Spring returns to an intermediate position when pulled or pushed and released.
- **Momentary Pull, Maintained Push**—(Three-position). Spring returns to intermediate position when pulled. Maintains in pushed position until manually returned to intermediate (ready to reset) position. Maintained stop holds circuit open and will prevent other series connected operators from starting the system.

The operators, buttons, contact blocks, etc., are offered as building block components that can be intermixed to satisfy many requirements. This minimizes the need for a varied and costly inventory.

Application Guide

To assist in the selection of contact blocks, the sketch below shows pictorially by symbols **1** and **2** locations of contact circuits after assembly of contact blocks and adapter to the operator. The table below shows the effect of the push and pull operations on either NO or NC contacts. (X = contact closed, O = contact open).

Locating Nibs

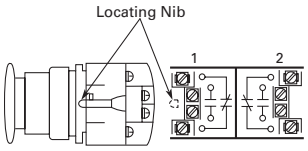

10250T_

E34G_

Push-Pull Operator Components

Type of Operator	Contact Block	Operator Position and Circuit Arrangement: Out—Pull (Contact Block Mounting Location 1)	Out—Pull (Contact Block Mounting Location 2)	Intermediate (Contact Block Mounting Location 1)	Intermediate (Contact Block Mounting Location 2)	In—Push (Contact Block Mounting Location 1)	In—Push (Contact Block Mounting Location 2)	10250T Catalog Number	E34 Catalog Number
Two-Position Operator without Lens									
Maintained push-pull	1NO	O	O	No intermediate position		X	X	**10250T5**	**E34GDB**
	1NC	X	X			O	O		
	2NO	O	O			X	X		
	2NC	X	X			O	O		
Three-Position Operator without Lens									
Momentary push-pull	1NO	O	O	O	O	X	O	**10250T4**	**E34GEB**
	1NC	X	X	O	X	O	O		
Maintained push-momentary pull	2NO	O	O	O	O	X	O	**10250T9**	**E34GFB**
	2NC	X	X	O	X	O	O		
Momentary push-pull	1NO	O	O	O	O	X	X	**10250T10**	**E34GHB**
	1NC	X	X	O	O	O	O		
	2NO	O	O	O	O	X	X		
	2NC	X	X	O	O	O	O		

Note

Use NEMA 4X 10250T operators where exposed to ultraviolet light.

Push-Pull Light Units, Lenses and Buttons
NEC Class I Division 2 Groups B, C and D

Light Units for Illuminated Push-Pull Devices

Light Unit Type	Type	Voltage	LED/Lamp Number	Catalog Number
LED (LEDs not included) ①	Full voltage	—	Bayonet base	**10250T97HL**
	Transformer AC only 50/60 Hz	24		**10250T89HL**
		120		**10250T63HL**
		208		**10250T64HL**
		240		**10250T65HL**
		277		**10250T82HL**
		380		**10250T66HL**
		480		**10250T67HL**
		600		**10250T68HL**
Incandescent	Full voltage AC or DC	6	#755 #756 #757 #1828	**10250T69H**
		12		**10250T70H**
		24/28		**10250T79H**
		32		**10250T83H**
	Resistor AC or DC	120	120MB	**10250T80H**
		240		**10250T81H**
	Transformer AC only 50/60 Hz	24	#755	**10250T89H**
		120		**10250T63H**
		208		**10250T64H**
		240		**10250T65H**
		277		**10250T82H**
		380		**10250T66H**
		480		**10250T67H**
		600		**10250T68H**

Note
① These units do not include lamps. Order LED separately to match lens color from table on **Page V7-T1-373**.

Alternate Lenses for Illuminated Push-Pull Devices

Standard

Side-Lighted (Anodized) Aluminum

HD Aluminum with Transparent Center

Color	10250T Catalog Number	E34 Catalog Number
Standard		
Red	**10250TC47**	**E34M2**
Red (EMERG. STOP)	**10250TC53**	**E34M2N8**
Green	**10250TC48**	**E34M3**
Blue	**10250TC49**	**E34M6**
Amber	**10250TC50**	**E34M9**
White	**10250TC51**	**E34M5**
Clear	**10250TC52**	**E34M0**
Side-Lighted Anodized Aluminum Ring		
Red	**10250TC57**	—
Red (EMERG. STOP)	**10250TC63**	—
Green	**10250TC58**	—
Blue	**10250TC59**	—
Amber	**10250TC64**	—
Yellow	**10250TC60**	—
White	**10250TC61**	—
Clear	**10250TC62**	—
Heavy-Duty Aluminum with Transparent Center		
Red	**10250TC65**	—
Green	**10250TC66**	—
Amber	**10250TC67**	—

Buttons for Non-Illuminated Push-Pull Devices

Standard

Jumbo Mushroom Head

Color	10250T Catalog Number	E34 Catalog Number
Standard		
Red	**10250TB62**	**E34C2**
Red (EMERG. STOP)	**10250TB63**	**E34C2N8**
Green	**10250TB61**	**E34C3**
Black	**10250TB60**	**E34C1**
Blue	**10250TB64**	**E34C6**
Jumbo Mushroom Head (Anodized) Aluminum ①		
Red	**10250TJ62**	**E34J2**
Red (EMERG. STOP)	**10250TJ63**	**E34J2N8**
Green	**10250TJ61**	—
Black	**10250TJ60**	—
Yellow	**10250TJ64**	—

Notes

Use NEMA 4X 10250T operators where exposed to ultraviolet light.

① Anodized aluminum head is not suitable for use with ultraviolet light applications.

Standard LED Lamp

LED Selection

Voltage	Color	Catalog Number
6 Vac/Vdc suitable for use with transformers	Red	**E22LED006RN**
	Orange	**E22LED006ON**
	Yellow	**E22LED006YN**
	Green	**E22LED006GN**
	Blue	**E22LED006BN**
	White	**E22LED006WN**
12 Vac/Vdc	Red	**E22LED012RN**
	Orange	**E22LED012ON**
	Yellow	**E22LED012YN**
	Green	**E22LED012GN**
	Blue	**E22LED012BN**
	White	**E22LED012WN**
24 Vac/Vdc	Red	**E22LED024RN**
	Orange	**E22LED024ON**
	Yellow	**E22LED024YN**
	Green	**E22LED024GN**
	Blue	**E22LED024BN**
	White	**E22LED024WN**
48 Vac/Vdc	Red	**E22LED048RN**
	Orange	**E22LED048ON**
	Yellow	**E22LED048YN**
	Green	**E22LED048GN**
	Blue	**E22LED048BN**
	White	**E22LED048WN**

Voltage	Color	Catalog Number
60 Vac/Vdc	Red	**E22LED060RN**
	Orange	**E22LED060ON**
	Yellow	**E22LED060YN**
	Green	**E22LED060GN**
	Blue	**E22LED060BN**
	White	**E22LED060WN**
120 Vac	Red	**E22LED120RA**
	Orange	**E22LED120OA**
	Yellow	**E22LED120YA**
	Green	**E22LED120GA**
	Blue	**E22LED120BA**
	White	**E22LED120WA**
120 Vdc	Red	**E22LED120RD**
	Orange	**E22LED120OD**
	Yellow	**E22LED120YD**
	Green	**E22LED120GD**
	Blue	**E22LED120BD**
	White	**E22LED120WD**

Note

For a complete listing of all LEDs available, see **Page V7-T1-269**.

1

Selector Switch Units

UL (NEMA) Type 3, 3R, 4, 4X, 12, 13, NEC Class I Division 2, Groups B, C and D

- Two- and three-position
- Non-illuminated

10250T72_

E34EX72_

Two-Position Selector Switch—Non-Illuminated

Operator Position ①		Operator Action ②	Contact Type	Mounting Location ① 1	Mounting Location ① 2	Cam Code	Black Knob—Selector Switch ③ 10250T Catalog Number	Black Knob—Selector Switch ③ E34 Catalog Number
X	0	M M	1NC			1	**10250T722BK**	**E34EX722BK**
0	X		1NO					
		M S					**10250T724BK**	**E34EX724BK**
X	0	M M	1NC			1	**10250T723BK**	**E34EX723BK**
0	X		1NO					
X	0		1NC					
0	X	M S	1NO				**10250T725BK**	**E34EX725BK**

10250T_

Three-Position Selector Switch—Non-Illuminated

Operator Position ①			Operator Action ②	Contact Type	Mounting Location ① 1	Mounting Location ① 2	Cam Code	Black Knob—Selector Switch ④ 10250T Catalog Number	Black Knob—Selector Switch ④ E34 Catalog Number
X	0	0	M M M	1NO			3	**10250T726BK**	**E34EX726BK**
0	0	X		1NO					
			M S M					**10250T728BK**	**E34EX728BK**
			M S S					**10250T730BK**	**E34EX730BK**
			M M S					**10250T732BK**	**E34EX732BK**
X	0	0	M M M	1NO			3	**10250T727BK**	**E34EX727BK**
0	X	0		1NC-1NC (Series)					
0	0	X		1NO					
			M S M					**10250T729BK**	**E34EX729BK**
			M S S					**10250T731BK**	**E34EX731BK**
			M M S					**10250T733BK**	**E34EX733BK**

Notes

① Bolded circuit corresponds to "X-O" circuit selection. X = closed circuit, O = open circuit.

② M = Maintained. S = Spring return in direction of arrow (→).

③ To order different type or color selector switch, simply substitute the underlined characters with appropriate suffix code from the table on **Page V7-T1-375.**
Example: 10250T722**LL**. For keyed selector switch, substitute the underlined characters with **T_ (cam)+_ (key removal position)**. Example: 10250T722**T13**.

④ To order different type or color selector switch, simply substitute the underlined characters with appropriate suffix code from the Switch and Color Selection table on **Page V7-T1-375**.
Example: 10250T726**LL**. For keyed selector switch, substitute the underlined characters with **T_ (cam)+_ (key removal position).** Example: 10250T726**T13**.

UL (NEMA) Type 3, 3R, 4, 4X, 12, 13, NEC Class I Division 2, Groups B, C and D

- Four-position maintained
- Non-illuminated

10250T743_

E34EX743_

Four-Position Selector Switch—Non-Illuminated

Operator Position ①				Operator Action ②	Contact Type	Mounting Location ① 1	Mounting Location ① 2	Cam Code	Black Knob—Selector Switch ③ 10250T Catalog Number	Black Knob—Selector Switch ③ E34 Catalog Number
X	0	0	0	M M	1NC			7	**10250T743BK**	**E34EX743BK**
0	X	0	0		1NO					
0	0	X	0	M M	1NO					
0	0	0	X		1NC					

Knob

Lever

Coin Slot ⑤

Switch and Color Selection

Color	Knob Suffix Code	Lever Suffix Code	Lever ④ Suffix Code	Coin Slot ⑤ Suffix Code
Black	**BK**	**BL**	**BA**	**BC**
Red	**RK**	**RL**	**RA**	**RC**
Green	**GK**	**GL**	**GA**	**GC**
Yellow	**YK**	**YL**	**YA**	**YC**
White	**WK**	**WL**	**WA**	**WC**
Gray	**AK**	**AL**	**AA**	**AC**
Blue	**LK**	**LL**	**LA**	**LC**
Orange	**NK**	**NL**	**NA**	**NC**

Key Operated Selection

Number of Position	Operator Action ⑥	Suffix and Removal Position
2	M M	T1 + 1, 2, 3
	M ← S	T1 + 2
3	M M M	T3 + 1–7
	S → M M	T3 + 1, 4, 5
	S → M ← S	T3 + 4
	M M ← S	T3 + 2, 4, 6
4	MMMM	T7 + 7

Key Removal Positions ⑦

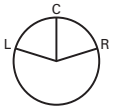

Code Suffix	Key Removal Position
1	Right only
2	Left only
3	Right and left
4	Center only
6	Left and center
7	All positions

Notes

① Bolded circuit corresponds to "X-O" circuit selection. X = closed circuit, O = open circuit.
② M = Maintained.
③ To order different type or color selector switch, simply substitute the underlined characters with appropriate suffix code from the Switch and Color Selection table above. Example: 10250T743**LL**. For keyed selector switch, substitute the underlined characters with **T_ (cam) + _ (key removal position).** Example: 10250T743**T77**.
④ Designed for added ingress protection. For use in maintained operators only.
⑤ 10250T only.
⑥ M = Maintained. S = Spring return in direction of arrow (→).
⑦ Key removal in "spring return from" positions not recommended.

Selector Switch Selection

10250T

E34

Cam and Contact Block Selection

Selector switches in their varied forms (two-position, three-position, and four-position) are a big factor contributing to the great flexibility of control that a well rounded line of "pushbuttons" can achieve. Because of their flexibility, they tend to cause difficulty with product selection and application. The following systematic approach should simplify that task.

Cam and contact block selection is better understood if you:

- Work with each incoming and outgoing wire/circuit separately.
- Recognize the terms NO and NC only identify the type of contact by its mode before mounting to the operator. The "X-O" table (**Page V7-T1-378**) shows how that contact will act after assembly to the operator with the selected cam shape. X = closed circuit, O = open circuit.
- One NO-NC contact block may be mounted behind each plunger of the mounting adapter for a total of four circuits.
- Each cam has two separate lobes, each of which operates one of the two contact block plungers independently of each other. Those are identified as position 1 (locating nib side) and position 2 (opposite of locating nib). The position designations give direction in selecting and mounting of the contact blocks.

Contact Circuit Locations

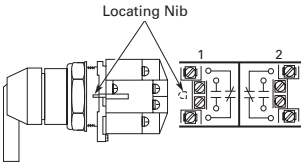

Systematic Approach

Application: **HAND-OFF-AUTO** selector switch. In this circuit, one incoming line is distributed to two other outgoing circuits by the switch. The two circuits can be looked at individually.

Step 1: Elementary Diagram.
Construct on paper, or in your mind, a simple elementary diagram of the switching scheme as follows:

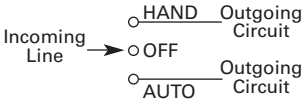

Step 2: "X-O" Pattern.
From the elementary diagram, you can construct an "X-O" diagram which describes when the contacts are to be closed (X) or open (O) in the various positions of the switch. The "X-O" for the **HAND** circuit looks like this:

HAND OFF AUTO
X O O

In this circuit, you want a contact closed on the left (HAND) but open in the center and right.

For the **AUTO** circuit, the "X-O" diagram would look like this:

HAND OFF AUTO
O O X

Putting them together, the complete "X-O" diagram is:

X O O
O O X

Once the "X-O" diagram has been generated, the next step is to select the cam and contact block, or blocks, needed to perform the desired "X-O" functions. The selection tables on the following pages list the various types (shapes) of cams by number to choose from and the type of contact and position to achieve the function outlined in your "X-O" diagram.

Step 3: Cam Selection.
The cam you select determines the operation of all contact blocks mounted to the operator. It is selected on the basis that it provides the simplest circuitry for the desired "X-O" diagram. The selection tables show all the "X-O" combinations. For the purpose of this example, the applicable portion of those tables is shown on this page.

Now to make the cam selection, make a simple worksheet such as below. (1) or (2) = mounting location from chart above:

	Cam 2	Cam 3
X O O	(1)NO-(2)NC ①	**(1)NO**
O O X	(2)NO	**(2)NO**

It becomes obvious that cam 3 is the better choice because the series connection can be avoided, making it simpler to wire.

Step 4: Contact Block Selection.
Having selected the cam, contact block selection is simply a matter of determining if you require one NO-NC contact block (Cat. No 10250T1H) or two. Given the limitations of the factory sealed contact block and the desired "X-O" application, you may have circuits that will not be needed—as seen here with the two additional NC circuits. (1) or (2) = mounting location from chart above.

Qty	Catalog No.	Cam 3	
2	10250TIH	**(1)NO**	(2)NC
		(1)NC	**(2)NO**

Step 5: Selector Switch Operator.
Lastly, you have to choose from the many types of operators—knob and lever in various colors or keyed. Also what combinations of maintained and spring return functions are required. Selection of these operators can be found on **Page V7-T1-379**. For the example in step 4, you may want a three-position maintained black knob, cam 3—Catalog Number 10250T1323 (or 34VHBK1).

The Complete Switch:
10250T1323 (or 34VHBK1) with two 10250T1H or for one composite catalog number—10250T726BK (or E34EX726BK) found on **Page V7-T1-374.**

Diagrams
Circuits shown illustrate connections to obtain a selector circuit combination and are shown with their appropriate line diagrams in **BOLD.** Field wiring of jumper connections required as shown.

X = Closed circuit
O = Open circuit

Example Selection Table

No.	Desired Circuit and Operator Position			Cam Code #2 Contact Blocks and Mounting Location 1	Cam Code #2 Contact Blocks and Mounting Location 2	Cam Code #3 Contact Blocks and Mounting Location 1	Cam Code #3 Contact Blocks and Mounting Location 2
1	X	O	O	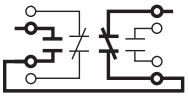 NO	NC ①	NO	—
4	O	O	X	—	NO	—	NO

Note
① Wired in series.

1

Two-Position Selector Switch

Number	Desired Circuit and Operator Position		Cam Code #1 Contact Blocks and Mounting Location 1	2
1	X	0	NC	NC
2	0	X	NO	NO

Three-Position Selector Switch

No.	Desired Circuit and Operator Position			Cam Code #2 Contact Blocks and Mounting Location 1	2	Cam Code #3 Contact Blocks and Mounting Location 1	2
1	X	0	0	NO (Series)	NC	NO	—
2	X	X	0	—	NC	—	NC
3	X	0	X	NO	—	NO (Parallel)	NO
4	0	0	X	—	NO	—	NO
5	0	X	X	NC (Parallel)	NO	NC	—
6	0	X	0	NC	—	NC (Series)	NC

Four-Position Selector Switch

Number	Desired Circuit and Operator Position				Cam Code #7 Contact Blocks and Mounting Location 1	2
1	X	0	0	0	NC	—
2	0	X	0	0	—	NO
3	0	0	X	0	NO	—
4	0	0	0	X	—	NC
5	X	0	0	X	NC (Parallel)	NC
6	0	X	X	0	NO (Parallel)	NO
7	0	0	X	X	NO (Parallel)	NC
8	X	X	0	0	NC (Parallel)	NO
9	0	X	0	X	—	NO/NC (Parallel)
10	X	0	X	0	NO/NC (Parallel)	—

Selector Switch Operators

10250T Selector Switch Operators with Caps

UL (NEMA) Type 3, 3R, 4, 4X, 12, 13

Black Knob Selector Switch

Black Lever Selector Switch

10250T Selector Switch Operators with Caps

Positions	Operator Action ①	Black Knob Selector Switch—Vertical Mounting ② Cam Code ③	Black Knob Selector Switch—Vertical Mounting ② Catalog Number	Black Lever Selector Switch—Vertical Mounting ② Cam Code ③	Black Lever Selector Switch—Vertical Mounting ② Catalog Number
Two-position—60° throw	M M	1	**10250T1311**	1	**10250T3011**
	M S	1	**10250T1371**	1	**10250T3071**
Three-position—60° throw	M M M	2	**10250T1322**	2	**10250T3022**
		3	**10250T1323**	3	**10250T3023**
	M S M	2	**10250T1332**	2	**10250T3032**
		3	**10250T1333**	3	**10250T3033**
	M S S	2	**10250T1342**	2	**10250T3042**
		3	**10250T1343**	3	**10250T3043**
	M M S	2	**10250T1352**	2	**10250T3052**
		3	**10250T1353**	3	**10250T3053**
Four-position—40° throw	M M M M	7	**10250T1367**	7	**10250T3067**

Horizontal Mounting

10250T Key Operators with Cam

Positions	Operator Action ①	Cam Code ③	Optional Key Removal Positions ④	Vertical Mounting Catalog Number ④	Horizontal Mounting Catalog Number ④
Two-position—60° throw	M M	1	1, 2, 3	**10250T1511_**	**10250T1611_**
	M S	1	2	**10250T1571_**	**10250T1581_**
Three-position—60° throw	M M M	2	1–7	**10250T1522_**	**10250T1622_**
		3		**10250T1523_**	**10250T1623_**
	M S M	2	1, 4, 5	**10250T1532_**	**10250T1632_**
		3		**10250T1533_**	**10250T1633_**
	M S S	2	4	**10250T1542_**	**10250T1642_**
		3		**10250T1543_**	**10250T1643_**
	M M S	2	2, 4, 6	**10250T1652_**	**10250T1662_**
		3		**10250T1653_**	**10250T1663_**
Four-position—40° throw	M M M M	7	7	**10250T1677_**	**10250T1687_**

Key Removal Positions

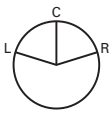

Key Removal Positions ⑤

Code Suffix	Key Removal Position	Code Suffix	Key Removal Position
1	Right only	**5**	Right and center
2	Left only	**6**	Left and center
3	Right and left	**7**	All positions
4	Center only		

Replacement Keys or Dissimilar Locks for Above Key Operators

Listed operators have identical locks and keys (Key Code H661) Catalog Number 10250ED824.

Replacement Keys

Description	Catalog Number
Replacement keys (code **H661**)	**10250ED824**

Notes

① M = Maintained. S = Spring return in direction of arrow (→).
② Field convertible to horizontal mounting or order operator only and separate operator cap.
③ For selection of the proper cam and contact block to obtain the proper circuit sequence, see selection instructions and table on **Pages V7-T1-376** to **V7-T1-378**.
④ Choose key removal position required for application from table above. Add key removal code no. to listed catalog number. Example: 10250T1511**2**.
⑤ Key removal in "spring return from" positions not recommended.

1

UL (NEMA) Type 3, 3R, 4, 4X, 12, 13

Black Knob Selector Switch

E34 Selector Switch Operators with Knob Assembled

Positions	Operator Action ①	Black Knob Selector Switch—Vertical Mounting ② Cam Code ③	Catalog Number ④
Two-position—60° throw	M M	1	**E34VFBK1**
	M S	1	**E34VEBK1**
Three-position—60° throw	M M M	2	**E34VGBK1**
		3	**E34VHBK1**
	S M M	2	**E34VJBK1**
		3	**E34VKBK1**
	S M S	2	**E34VLBK1**
		3	**E34VMBK1**
	M M S	2	**E34VNBK1**
		3	**E34VPBK1**
Four-position—40° throw	M M M M	7	**E34VTBK1**

E34KFB_

E34 Key Operators with Cam and Cap

Positions	Operator Action ①	Cam Code ③	Key Removal Positions ⑤	Vertical Mounting Catalog Number	Horizontal Mounting Catalog Number
Two-position—60° throw	M M	1	1, 2, 3	**E34KFB_**	**E34KFHB_**
	M S	1	2	**E34KEB_**	**E34KEHB_**
Three-position—60° throw	M M M	2	1–7	**E34KGB_**	**E34KGHB_**
		3		**E34KHB_**	**E34KHHB_**
	S M M	2	1, 4, 5	**E34KJB_**	**E34KJHB_**
		3		**E34KKB_**	**E34KKHB_**
	S M S	2	4	**E34KLB_**	**E34KLHB_**
		3		**E34KMB_**	**E34KMHB_**
	M M S	2	2, 4, 6	**E34KNB_**	**E34KNHB_**
		3		**E34KPB_**	**E34KPHB_**
Four-position—40° throw	M M M M	7	7	**E34KTB_**	**E34KTHB_**

Notes

Use NEMA 4X 10250T operators where exposed to ultraviolet light, see **Page V7-T1-379**.

① M = Maintained. S = Spring return in direction of arrow (→).

② Field convertible to horizontal mounting.

③ For selection of the proper cam and contact block to obtain the proper circuit sequence, see selection instructions and table on **Pages V7-T1-376** to **V7-T1-378**.

④ For other colors of either knob or lever, replace the underlined characters of the catalog number with the appropriate suffix code from Alternate Knobs and Levers table on **Page V7-T1-381**. Example: E34VFB**L2**.

⑤ Choose key removal position required for application from table on **Page V7-T1-381**. Add key removal code no. to listed catalog number. Example: E34KFB**2**.

Key Removal Positions

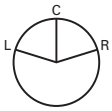

Key Removal Positions

Code Suffix	Key Removal Position	Code Suffix	Key Removal Position
1	Right only	**5**	Right and center
2	Left only	**6**	Left and center
3	Right and left	**7**	All positions
4	Center only		

Knob

Lever

Lever for Added Ingress Protection

Alternate Knobs and Levers for Operators ①

	Knob		Lever		Lever Designed for Added Ingress Protection ②	
Color	**Suffix Code**	**Catalog Number**	**Suffix Code**	**Catalog Number**	**Suffix Code**	**Catalog Number**
Black	**K1**	**E34K1**	**L1**	**E34L1**	**A1**	**E34A1**
Red	**K2**	**E34K2**	**L2**	**E34L2**	**A2**	**E34A2**
Green	**K3**	**E34K3**	**L3**	**E34L3**	**A3**	**E34A3**
Yellow	**K4**	**E34K4**	**L4**	**E34L4**	**A4**	**E34A4**
White	**K5**	**E34K5**	**L5**	**E34L5**	**A5**	**E34A5**
Blue	**K6**	**E34K6**	**L6**	**E34L6**	**A6**	**E34A6**
Gray	**K7**	**E34K7**	**L7**	**E34L7**	**A7**	**E34A7**
Orange	**K8**	**E34K8**	**L8**	**E34L8**	**A8**	**E34A8**

Notes

① Key removal in "spring return from" positions not recommended.
② For use on maintained operators only.

1

Illuminated Selector Switch Operators

Two-Position Maint. Selector Switch

10250T Illuminated Selector Switch Operator Only without Knob or Lever

		Transformer Type—50/60 Hz 6V #755 Lamp			Full Voltage Type—AC or DC ④ Lamps: 6V—#755, 12V—#756, 24V—#757, 48V—#1835, 120/240V—120MB		
Position	**Operator Action ①**	**Cam Code ③**	**Voltage**	**Catalog and Code Number ②**	**Cam Code ③**	**Voltage**	**Catalog and Code Number ②**
Two-position—60° throw	M M	1	24	**10250T5961H**	1	6	**10250T6201H**
			120	**10250T5971H**		12	**10250T6211H**
			208	**10250T6511H**		24	**10250T6221H**
			240	**10250T5981H**		48	**10250T6231H**
			380	**10250T5991H**		120	**10250T6361H**
			480	**10250T6001H**		240 ⑤	**10250T6371H**
			600	**10250T6011H**			
Three-position—60° throw	M M M	+ 2 or 3	24	**10250T602_H**	+ 2 or 3	6	**10250T624_H**
			120	**10250T603_H**		12	**10250T625_H**
			208	**10250T652_H**		24	**10250T626_H**
			240	**10250T604_H**		48	**10250T627_H**
			380	**10250T605_H**		120	**10250T638_H**
			480	**10250T607_H**		240 ⑤	**10250T639_H**
			600	**10250T607_H**			
	M M S	+ 2 or 3	120	**10250T620_H**	+ 2 or 3	120	**10250T622_H**
			240	**10250T656_H**			
	S M M	+ 2 or 3	120	**10250T621_H**	+ 2 or 3	120	**10250T623_H**
			240	**10250T662_H**			
	S M S	+ 2 or 3	24	**10250T614_H**	+ 2 or 3	6	**10250T628_H**
			120	**10250T615_H**		12	**10250T629_H**
			208	**10250T653_H**		24	**10250T630_H**
			240	**10250T616_H**		48	**10250T631_H**
			380	**10250T617_H**		120	**10250T640_H**
			480	**10250T618_H**		240 ⑤	**10250T641_H**
			600	**10250T619_H**			
Four-position—40° throw	M M M M	7	24	**10250T6087H**	7	6	**10250T6327H**
			120	**10250T6097H**		12	**10250T6337H**
			208	**10250T6547H**		24	**10250T6347H**
			240	**10250T6107H**		48	**10250T6357H**
			380	**10250T6117H**		120	**10250T6427H**
			480	**10250T6127H**		240 ⑤	**10250T6437H**
			600	**10250T6137H**			

Knob

Lever

Knobs and Levers

Color ⑥	Knob Catalog and Code Number	Lever Catalog and Code Number	Color ⑥	Knob Catalog and Code Number	Lever Catalog and Code Number
Red	**10250TER**	**10250TFR**	Clear	**10250TEC**	**10250TFC**
Green	**10250TEG**	**10250TFG**	White	**10250TEW**	**10250TFW**
Yellow	**10250TEA**	**10250TFA**	Amber	**10250TEM**	**10250TFM**
Blue	**10250TEL**	**10250TFL**			

Notes

① M = Maintained. S = Spring return in direction of arrow (→).

② For selection of the proper cam and contact block, to obtain the proper circuit sequence, see selection table on **Page V7-T1-378**.

③ Operator includes lens gasket and lens attachment screws.

④ Full voltage light units can be used at other than listed voltages by changing lamp. Replacement lamps are listed on **Page V7-T1-269**.

⑤ Resistor type. May generate excess heat if used in high density.

⑥ Amber, clear and white lenses have a black arrow (pointer), red, green and blue lenses have a white arrow (pointer).

120 Vac Transformer Selector Switch, Cam 1

Illuminated Selector Switch Operator Only without Knob or Lever

Positions	Operator Action	Transformer Type—50/60 Hz 6V #755 Lamp Catalog Number ①②		Full Voltage Type—AC or DC ③ Lamps—#755, #757, #1835, 120MB ④ Catalog Number ②	
Two-position—60° throw		**Cam Code 1** ⑤		**Cam Code 1** ⑤	
		E34VFB_H		**E34SFB_H**	
Three-position—60° throw	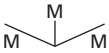	**Cam Code 2** ⑤	**Cam Code 3** ⑤	**Cam Code 2** ⑤	**Cam Code 3** ⑤
		E34VGB_H	**E34VHB_H**	**E34SGB_H**	**E34SHB_H**
	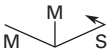	**E34VNB_H** ⑥	**E34VPB_H** ⑥	**E34SNB_H** ⑦	**E34SPB_H** ⑦
	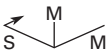	**E34VJB_H** ⑥	**E34VKB_H** ⑥	**E34SJB_H** ⑦	**E34SKB_H** ⑦
	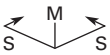	**E34VLB_H**	**E34VMB_H**	**E34SLB_H**	**E34SMB_H**
Four-position—40° throw	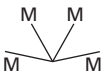	**E34VRB_H**	—	**E34SRB_H**	—

Knob

Lever

Knobs and Levers

Color ⑨	Knob Catalog Number and Code Number	Lever Catalog Number and Code Number
Red	**10250TER**	**10250TFR**
Green	**10250TEG**	**10250TFG**
Yellow	**10250TEA**	**10250TFA**
Blue	**10250TEL**	**10250TFL**
Clear	**10250TEC**	**10250TFC**
White	**10250TEW**	**10250TFW**
Amber	**10250TEM**	**10250TFM**

Light Unit Voltage Suffix

Add to operator catalog number listed in table above.

Type of Light Unit: Transformer Type 50/60 Hz Voltage	Suffix Code	Full Voltage Type AC or DC ③ Voltage	Suffix Code
24	**024**	6	**06**
120	**120**	12	**12**
208	**208**	24	**24**
240	**240**	48	**48**
380	**380**	120	**120**
480	**480**	240 ⑧	**240**
600	**600**		

Notes

Use NEMA 4X 10250T operators where exposed to ultraviolet light, see **Page V7-T1-382**.

① Operator includes lens gasket and lens attachment screws.

② Replace underscore with proper voltage suffix code from Light Unit Voltage Suffix table above. Example: three-position maintained with 120V transformer type light unit: E34VGB**120**H.

③ Full voltage light units can be used at other than listed voltages by changing lamp. Replacement lamps are listed on **Page V7-T1-269**.

④ 120MB lamps are used on both 120V and 240V operators.

⑤ For selection of the proper cam and contact block required to obtain a specific circuit sequence, see selection table on **Page V7-T1-378.**

⑥ 120 and 240V transformer only.

⑦ 120 full voltage only.

⑧ Resistor type. May generate excess heat if used in high density.

⑨ Amber, clear and white lenses have a black arrow (pointer). Red, green and blue lenses have a white arrow (pointer).

1

Options

Contact Blocks and Mounting Adapters

NEC Class I Division 2, Groups B, C and D

Contact Block

Contact Block

Description	Catalog Number
Class I Division 2 factory sealed contact block with 1NO-1NC	**10250T1H**

Dimensions, see **Page V7-T1-389**.

Mounting Adapter

Mounting Adapter

Description	Catalog Number
Mounting adapter for pushbuttons	**10250TD2**
Mounting adapter for selector switches	**10250TD3**

Dimensions, see **Page V7-T1-389**.

Mounting Adapters with Contact Block(s)—Overpacked

Description	Catalog Number
Pushbutton adapter with 1NO-1NC	**10250TD21H**
Pushbutton adapter with 2 (1NO-1NC)	**10250TD21H1H**
Selector switch adapter with 1NO-1NC	**10250TD31H**
Selector switch adapter with 2 (1NO-1NC)	**10250TD31H1H**

Mounting and Assembly

Panel Thickness

- Minimum: 0.06 in (1.6 mm)
- Maximum: 0.25 in (8 mm) including legend plate
- Maximum can be increased to 0.375 in (15.9 mm) using optional retaining nut
  - Indicating light: 10250TA30/E34TA30
  - Pushbutton/selector switch: 10250TA31/E34TA31

Mounting Matrix

Legend Plate	Dimensions in Inches (mm) A	B	C	D
Small	2.87 (72.6)	2.25 (57.2)	2.25 (57.2)	2.87 (72.6)
Jumbo	2.87 (72.6)	2.32 (58.6)	2.32 (58.6)	2.87 (72.6)
Extra large	2.87 (72.6)	2.56 (65.2)	2.52 (64.1)	2.87 (72.6)

Panel Spacing and Drilling

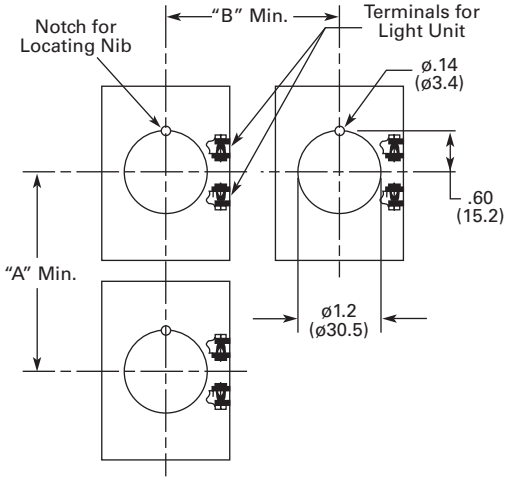

Drilling for One Hole Mounting and Dimensions for Minimum Spacing in Vertical Rows.

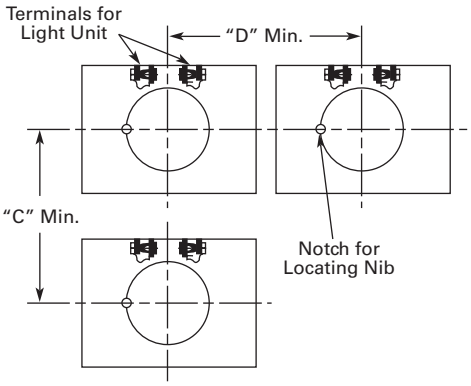

Drilling for One Hole Mounting and Dimensions for Minimum Spacing in Horizontal Rows.

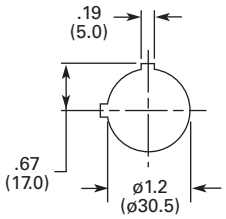

NOTE: Suitable for Use in This Alternate Mounting Hole.

Operator Assembly

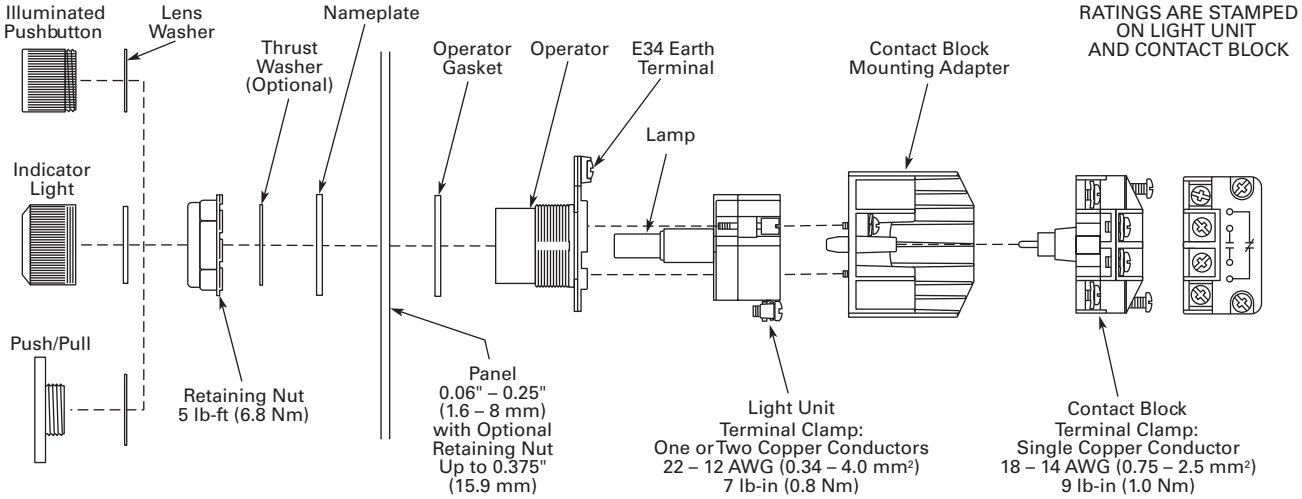

1

Enclosures

Die Cast, Polyester and Stainless Steel Enclosures

Die Cast Enclosure

Polyester Enclosure

Stainless Steel Enclosure

Enclosures (Case and Cover)—Surface Mounting ①

Number of Elements	10250T Catalog Number	E34 Catalog Number
Die Cast Enclosure—Deep Cover—In-Line NEMA 4, 4X, 12, 13		
1	**10250TN11**	**E34N11**
2	**10250TN12**	**E34N12**
3	**10250TN13**	**E34N13**
4	**10250TN14**	**E34N14**
Polyester—In-Line NEMA 3, 4X, 12		
1	—	**E34N51**
2	—	**E34N52**
3	—	**E34N53**
4	—	**E34N54**
Stainless Steel ②—In-Line NEMA 4, 4X, 12		
1	—	**10250TN33**
2	—	**10250TN34**
3	—	**10250TN35**
4	—	**10250TN36**

Dimensions, see **Page V7-T1-389**.

Notes

① For spacing increments, see **Page V7-T1-264**.

② 14 gauge, type 304.

Application Notes:

1. Operators need to be mounted in their horizontal orientation for all enclosures. For die cast enclosures remove locating nib on operators and use thrust washer (Catalog Number 10250TK3).
2. Polyester enclosures must be used when mounting illuminated operators.

Enclosure Layouts

Top – For Vertical Mounting

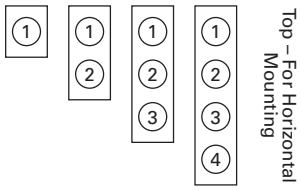

Top – For Horizontal Mounting

Technical Data and Specifications

Mechanical Ratings

Description	Specification
Frequency of Operation	
All pushbuttons	6000 operations/hr.
Key and lever selector switches	3000 operations/hr.
Life	
Pushbuttons	10 x 10^6 operations
Contact block	10 x 10^6 operations
Key and lever selector switches	0.25 x 10^6 operations
Shock Resistance	
Duration/force	20 ms ≥5g

Climatic Conditions

Description	Specification
Operating temperature	32° to 140°F (0° to 66°C)
Storage temperature	–40° to 176°F (–40° to 80°C)
Altitude	6,562 ft (2,000m)
Humidity	Max. 95% RH at 60°C

Terminals

Description	Specification
Light Units	
Clamps	Terminals are saddle clamp type for 1 x 22 AWG (0.34 mm^2) to 2 x 14 AWG (4.0 mm^2) conductors
Torque	7 lb-in (0.8 Nm)
Degree of protection against direct electrical contact	IP2X with fingerproof shroud
Contact Blocks	
Clamps	Terminals are stainless steel saddle clamp type for 1 x 18–14 AWG (0.75–2.5 mm^2) solid or stranded copper conductor
Torque	9 lb-in (1.0 Nm) with size 2 Phillips screwdriver
Degree of protection against direct electrical contact	IP2X with fingerproof shroud

Electrical Ratings

Description	Specification
Light Units	
Bulbs—average life:	
Transformer type	20,000 hrs.
Resistor/direct voltage type	2500 hrs. minimum at rated voltage
LED	60,000 to 100,000 hrs.

Electrical Ratings—Contact Block

Meet or Exceed NEMA Contact Rating Designations A600 and Q300

	A600 (AC)				Q300 (DC)	
Description	**120V**	**240V**	**480V**	**600V**	**125V**	**250V**
Make and emerg. interrupting capacity (amps)	60	30	15	12	0.55	0.27
Normal load break (amps)	6	3	1.5	1.2	0.55	0.27
Thermal current (amps)	10	10	10	10	2.5	2.5
Voltamperes:						
Maximum make	7200	7200	7200	7200	69	69
Maximum break	720	720	720	720	69	69

Temperature Codes

All illuminated devices have operating temperatures below 100°C except for the following catalog numbers with temperature codes per NEC table 500.5(d) and UL 1604:

10250T	E34	Temp. Code
10250T201H	**E34RB120H**	**T3C**
10250T202H	**E34RB240H**	**T3A**
10250T471H	**E34SB120H**	**TC3**
10250T472H	**E34SB240H**	**T3B**
10250T80H	—	**T3C**
10250T81H	—	**T3B**
All selector switches w/120 MB lamp		**T3C**
All illuminated devices with lamp 1835		**T4A**

Note: For additional technical information, see Publication Number **TD.7.4.T.E.04**.

Dimensions

Approximate Dimensions in Inches (mm)

Surface Mounting

Die Cast, Polyester and Stainless Steel Enclosures

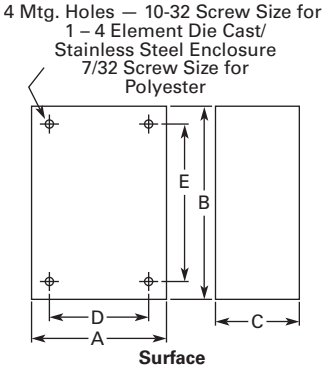

Number of Elements	Element Arrangement	Wide A	High B	Deep C	Mounting D	E	Conduit Entrance
Die Cast							
1	In-line	3.88 (98.6)	4.00 (101.6)	3.00 (76.3)	2.69 (68.3)	3.25 (82.6)	3/4
2		3.88 (98.6)	5.88 (149.4)	3.00 (76.3)	2.69 (68.3)	5.13 (130.3)	
3		3.88 (98.6)	7.75 (196.9)	3.00 (76.3)	2.69 (68.3)	7.00 (177.8)	1
4		3.88 (98.6)	9.63 (244.6)	3.00 (76.3)	2.69 (68.3)	8.88 (225.6)	
Polyester							
1	In-line	3.81 (96.8)	6.63 (168.4)	3.38 (85.9)	2.94 (74.7)	4.88 (124.0)	①
2		3.81 (96.8)	6.63 (168.4)	3.38 (85.9)	2.94 (74.7)	4.88 (124.0)	
3		3.81 (96.8)	8.88 (225.6)	3.38 (85.9)	2.94 (74.7)	7.13 (181.1)	
4		3.81 (96.8)	11.13 (282.7)	3.38 (85.9)	2.94 (74.7)	9.38 (238.3)	
Stainless Steel							
1	In-line	3.00 (76.2)	3.50 (88.9)	3.00 (76.2)	1.50 (38.1)	4.25 (108.0)	①
2		3.50 (88.9)	6.75 (171.5)	3.00 (76.2)	1.50 (38.1)	7.50 (190.5)	
3		3.50 (88.9)	9.00 (228.6)	3.00 (76.2)	1.50 (38.1)	9.00 (228.6)	
4		3.50 (88.9)	11.25 (285.8)	3.00 (76.2)	1.50 (38.1)	12.00 (304.8)	

Contact Block

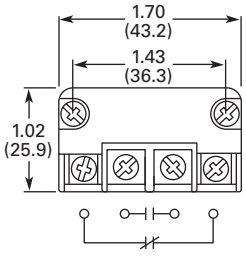

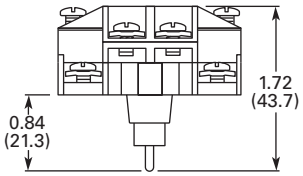

Mounting Adapter

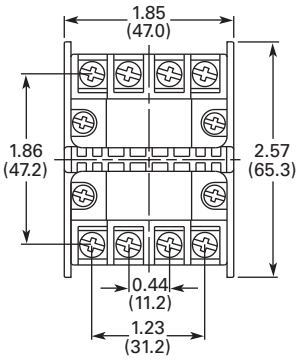

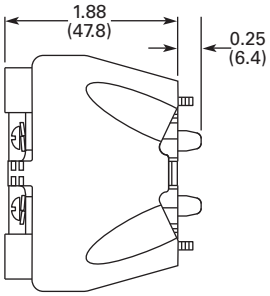

Note

① No conduit entrance holes provided. Drill as required.

1

Ratings

Summary of NEC Article 500

The NEC Article 500 explains in great detail the requirements for the installation of wiring and electrical equipment in hazardous locations. The purpose of this summary is for general reference only, the National Electrical Code along with other applicable authorities having jurisdiction over the site should be the installer's guidelines when wiring or installing electrical equipment in any hazardous or potentially hazardous location.

Class I, Division 2 Definition

Class I, Division 2 covers hazardous locations where flammable gases, vapors or volatile liquids are handled either in a closed system, or confined within suitable enclosures, or where hazardous concentrations are normally prevented by positive mechanical ventilation. Areas adjacent to Division 1 locations, into which gases might occasionally flow, would also belong to Division 2 (NEC (500.5[b])).

Hazardous Location

Any area where there is the possibility of explosion and fire resulting from the presence of flammable vapors, liquids or gas, or combustible dust or fibers.

Summary of NEC Article 505

The NEC also classifies hazardous locations for flammable gases and vapors into zones under NEC 505. This system is more in line with the European Standards, CENELEC and IEC, with the major difference being that NEC 505 only classifies gases and vapors while CENELEC and IEC also include dusts.

Summary of Classifications

NEC 500–503

Class	Division	Group
I. Gas	1. Hazard may exist—May exist in atmosphere under normal operating conditions	A. Acetylene
		B. Hydrogen and manufactured gases containing 30% hydrogen by volume (e.g. butadiene, ethylene oxide, propylene oxide)
		C. Petrochemicals (e.g. carbon monoxide, ether, ethylene, hydrogen sulfide, morpholine, cyclopropane)
		D. Petrochemicals (e.g. gasoline, benzene, butane, propane, acetone, ammonia, vinyl chloride)
	2. Potential hazard—May be present in atmosphere only under abnormal circumstances OR location adjacent to Class I, Division 1 location	A. Acetylene
		B. Hydrogen and manufactured gases containing 30% hydrogen by volume (e.g. butadiene, ethylene oxide, propylene oxide)
		C. Petrochemicals (e.g. carbon monoxide, ether, ethylene, hydrogen sulfide, morpholine, cyclopropane)
		D. Petrochemicals (e.g. gasoline, benzene, butane, propane, acetone, ammonia, vinyl chloride)
II. Dust	1. Hazard may exist—May exist in atmosphere under normal operating conditions	E. Conductive and combustible dust (resistivity $<10^5$ ohm/cm) (metal dusts)
		F. Carbonaceous dusts (resistivity $>10^2$ ohms/cm but $\leq 10^8$ ohms/cm) (e.g. carbon black, coke dust, coal)
		G. Non-conductive combustible dust (resistivity $\geq 10^5$ ohms/cm) (e.g. grain dust, flour, starch, sugar, plastics)
	2. Potential hazard—May be present in atmosphere only under abnormal circumstances	F. Carbonaceous dusts (resistivity $>10^2$ ohms/cm but $\leq 10^8$ ohms/cm) (e.g. carbon black, coke dust, coal)
		G. Non-conductive combustible dust (resistivity $\geq 10^5$ ohms/cm) (e.g. grain dust, flour, starch, sugar, plastics)
III. Fibers	1. Production areas	Easily ignitable fibers or flyings
	2. Handling and storage areas	Easily ignitable fibers or flyings

NEC 505

Class	Zone	Group
I. Gas	0. Continuously present or present for long periods of time	IIC. Acetylene, hydrogen or equivalent hazard
		IIB. Acetaldehyde, ethylene or equivalent hazard
		IIA. Acetone, ammonia, ethyl alcohol, gasoline, methane, propane or equivalent hazard
	1. Likely to exist under normal operating or maintenance conditions or adjacent to Zone 0	IIC. Acetylene, hydrogen or equivalent hazard
		IIB. Acetaldehyde, ethylene or equivalent hazard
		IIA. Acetone, ammonia, ethyl alcohol, gasoline, methane, propane or equivalent hazard
	2. Not likely to occur in normal operation and if they do occur will only exist for short period or adjacent to Zone 1	IIC. Acetylene, hydrogen or equivalent hazard
		IIB. Acetaldehyde, ethylene or equivalent hazard
		IIA. Acetone, ammonia, ethyl alcohol, gasoline, methane, propane or equivalent hazard

Note

For additional information on grouping of compounds, see NFPA 497M-1991 and NFPA 325-1994.

Summary of Basic Methods Available for Class I, Division 2 Locations

Method	Features Configuration	Advantages	Disadvantages
Factory sealed contact block	Closed-ended labyrinth contact block with an incendive circuit incapable of external ignition	Higher continuous carrying amperages—up to 10A Direct drive contacts—contacts can be forced open Suitable for use in all enclosures Best suited for motor control applications	May not be suitable for logic level circuits
Hermetically sealed block	Reed switch sealed against an external atmosphere	Suitable for low energy level circuits Suitable for use in all enclosures	Lower continuous carrying amperages are not suitable for motor control applications (typically 3A to 5A rated) Contacts cannot be forced open Permanent magnet attracts metallic dust and filings that can reduce the electrical creepage distance between live terminals
Explosion proof enclosures (Class I, Division 1 and 2)	Enclosures capable of withstanding an internal explosion while preventing external ignition. Enclosures designed for Class I, Division 1 can safely be used in Class I, Division 2	Higher level of protection than required for Class I Division 2	Higher material and installation costs Conduit sealing is still required Time consuming maintenance

Factory Sealed Contact Blocks

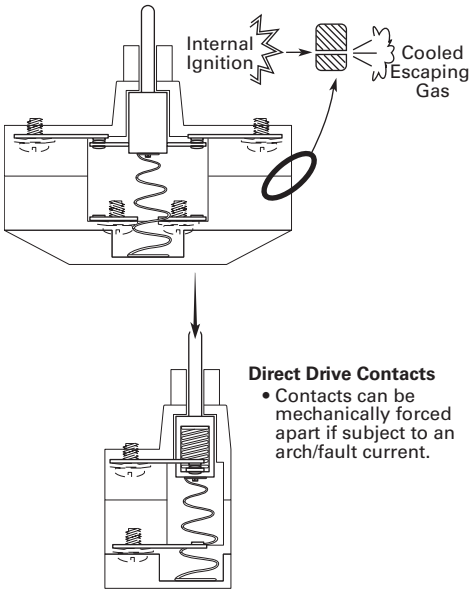

Hermetically Sealed Reed Contact Block

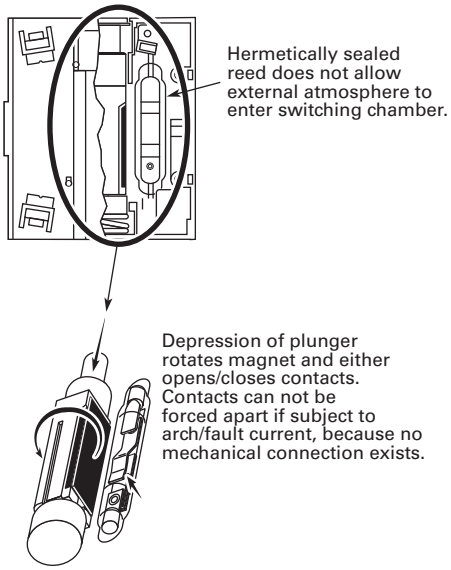

Explosion Proof Enclosure

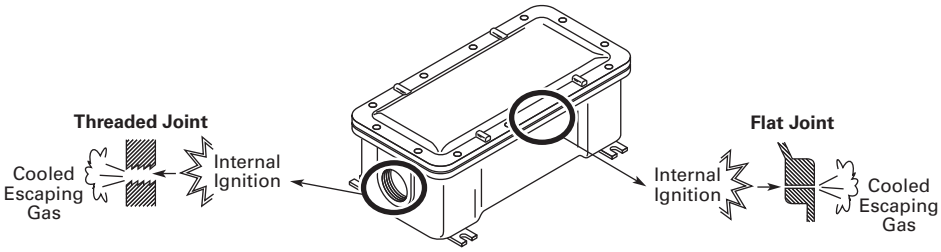

SL Series Stacklights

E26 Series Stacklights

2.1 SL Series

Product Description V7-T2-2
Features V7-T2-2
Benefits V7-T2-2
Standards and Certifications V7-T2-2
Product Overview V7-T2-3
Component Identification—SL7 . . . . . V7-T2-4
Product Selection—SL7 . . . . . V7-T2-6
Component Identification—SL4 . . . . . V7-T2-12
Product Selection—SL4 . . . . . V7-T2-14
Accessories V7-T2-19
Technical Data and Specifications V7-T2-20
Dimensions V7-T2-25

2.2 E26 Series

Product Description V7-T2-32
Features V7-T2-32
Benefits V7-T2-32
Standards and Certifications V7-T2-32
Product Identification V7-T2-33
Catalog Number Selection V7-T2-34
Product Selection V7-T2-35
Replacement Parts V7-T2-40
Technical Data and Specifications V7-T2-41
Ratings V7-T2-42
Mounting Instructions V7-T2-43
Dimensions V7-T2-44

Stacklights—SL Series

Contents

Description	*Page*
SL Series	
Product Overview	**V7-T2-3**
Component Identification—SL7	**V7-T2-4**
Product Selection—SL7	**V7-T2-6**
Component Identification—SL4	**V7-T2-12**
Product Selection—SL4	**V7-T2-14**
Accessories	**V7-T2-19**
Technical Data and Specifications	**V7-T2-20**
Dimensions	**V7-T2-25**

Product Description

The new Eaton SL7 and SL4 stacklights provide reliable control over all key processes and machine availability. Now available in two sizes, 70 mm (SL7) and 40 mm (SL4), the new stacklights are engineered to keep you informed about potential material requirements, downtime and hazards. Modules are available in a wide selection of audible, illuminating and mounting options that are well suited to adapt to any industrial application.

Highly Modular and Versatile Line

- Easily configurable components
- Simple bayonet mounting mechanism for quick assembly
- Flexible mounting and lighting options
- Volume-adjustable alarms

Optimal Performance in Rugged Applications

- All elements have IP66 and UL Type 4/4X/13 ratings for protection against strong jets of water
- Bright and efficient LEDs with a lifespan of up to 100,000 hours
- High-performance LEDs for maximum illumination in direct sunlight
- Acoustic modules with up to 100 dB sound levels
- Operating temperatures: –22° to +140°F (–30° to +60°C)

Features

- Six lens colors: red, amber, yellow, green, blue, white
- Continuous, flashing, strobe and multi-strobe lighting functions
- Mono-tone, dual-tone and multi-tone audible alarms
- LED or incandescent lighting options
- Control up to five modules on a single stack, 10 with dual-arm base
- 24V, 120 Vac and 230 Vac operating voltages

Benefits

- Simplified twist-and-lock assembly, no tools required
- Compact components reduce inventory requirements and increase flexibility
- Versatile hardware for quick installation and minimized downtime
- New slim 40 mm size is ideal for applications with constrained space
- Lean automation with SmartWire-DT connectivity
- Ideal for indoor and outdoor usage

Standards and Certifications

- UL 508—File No. E29184
- IEC/EN 60947-5-1
- CSA C22.2 No. 14-10
- CSA C22.2 No. 94-91
- CSA Class No. NKCR7

Listed

Product Overview

	SL7	SL4
Diameter	**70 mm**	**40 mm**
Acoustic Modules	Page **V7-T2-9**	Page **V7-T2-16**
Light Modules	Continuous light, LED: Page **V7-T2-6**	Continuous light, LED: Page **V7-T2-16**
	Flashing light, LED: Page **V7-T2-7**	Flashing light, LED: Page **V7-T2-15**
	Strobe light, LED: Page **V7-T2-7**	Strobe light, LED: Page **V7-T2-15**
	Continuous light, high-performance LED: Page **V7-T2-8**	Multi-strobe light, LED: Page **V7-T2-17**
	Strobe light, high-performance LED: Page **V7-T2-8**	Continuous light, Incandescent: Page **V7-T2-17**
	Multi-strobe light, high-performance LED: Page **V7-T2-8**	
	Continuous light, Incandescent: Page **V7-T2-8**	
Base Modules	Page **V7-T2-10, V7-T2-11**	Page **V7-T2-17**
Accessories	Page **V7-T2-19**	Page **V7-T2-19**

Component Identification—SL7

Component Identification

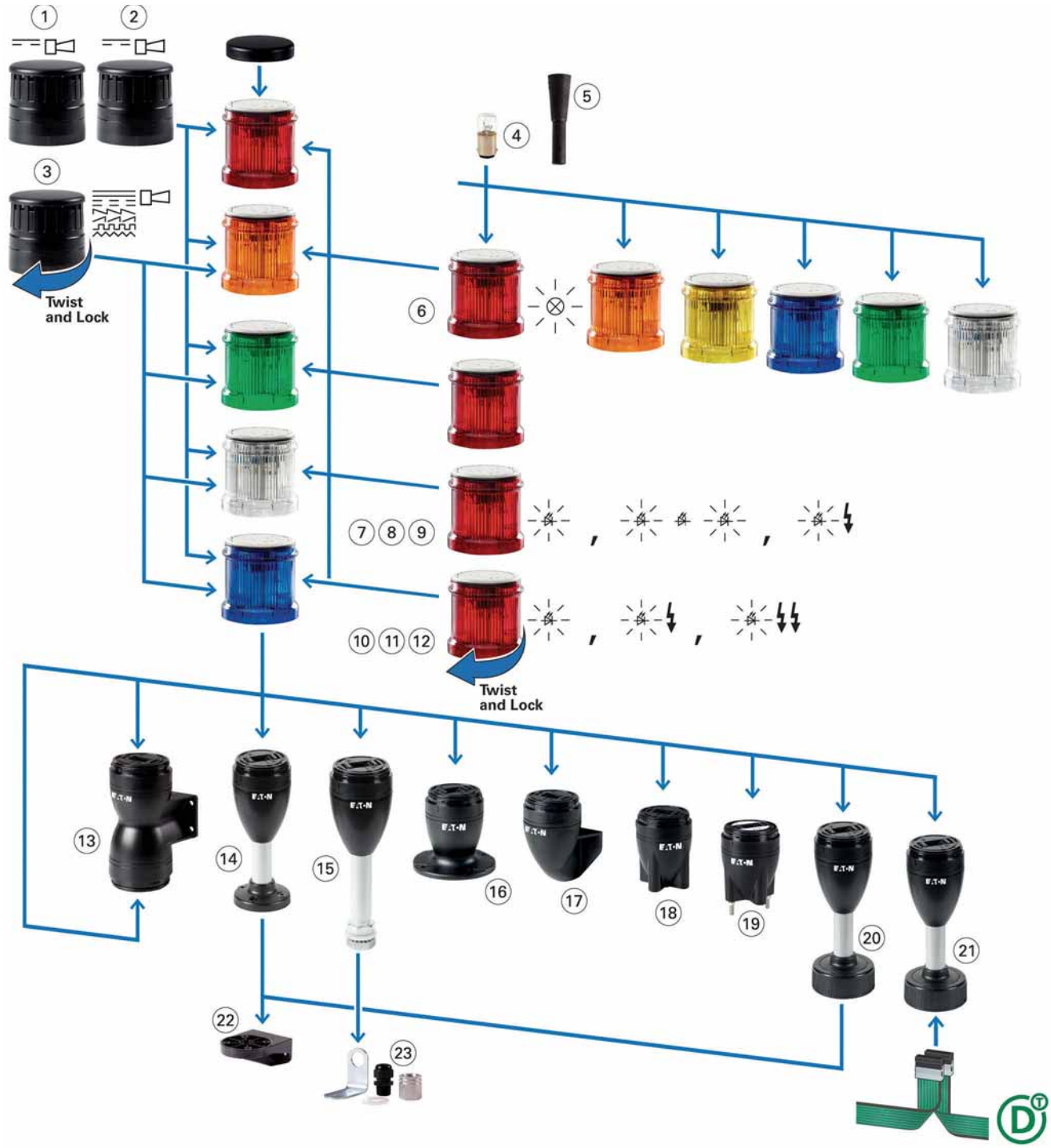

Light Modes

	Continuous	Flashing	Strobe	Multi-Strobe
Incandescent		—	—	—
LED				

SL7—Component Identification Descriptions

Item	Item Number	Description	Page Reference
Acoustic Modules			
Easy mounting with bayonet mount, place at highest position Sound pressure up to 100 dB, adjustable with internal potentiometer Operating mode: 100% DF (duty factor) Degree of protection: UL Type 4/4X/13, IP66 Operational voltages: 24 Vac/Vdc, 110/120 Vac, 230/240 Vac	**1**	Continuous tone or pulsed tone, adjustable with internal DIP switches Frequency: 2800 Hz	**V7-T2-9**
	2	Continuous tone or pulsed tone; can be actuated externally; takes up to two inputs (two modules) Frequency: 2800 Hz	**V7-T2-9**
	3	Multi-tone (eight tones) adjustable with internal DIP switch Frequency 500–2700 Hz	**V7-T2-9**
Incandescent Bulb	**4**	Accessory	**V7-T2-19**
Tool for Replacing Incandescent Bulb	**5**	Accessory	**V7-T2-19**
Light Modules			
Easy mounting with bayonet mount, modules can be arranged in any order Operating mode: 100% DF (duty factor) Degree of protection: UL Type 4/4X/13, IP66 Max. 5 modules per stack or up to 10 via dual-arm base option			
Light Module for Incandescent Bulb			
Continuous light	**6**	BA15d socket, without incandescent bulb	**V7-T2-7**
Light Modules with LED			
Continuous light	**7**		**V7-T2-6**
Flashing light	**8**	Flashing frequency: 2 Hz	**V7-T2-7**
Strobe light	**9**	Flashing frequency: 1.4 Hz	**V7-T2-7**
Light Modules with High-Output LED			
Continuous light	**10**		**V7-T2-8**
Strobe light	**11**	High-performance LED, flashing frequency: 1.4 Hz	**V7-T2-8**
Strobe light, multi-strobe light	**12**	High-performance LED, with various strobe sequences Flashing frequency: 1–2.6 Hz	**V7-T2-8**
Base Modules			
Easy mounting with bayonet mount, includes cover plate, with spring-cage terminals Degree of protection: UL Type 4/4X/13, IP66			
Base for mounting on both sides	**13**	Max. 2 x 5 modules that can be actuated individually	**V7-T2-11**
Base with aluminum tube and plastic foot	**14**	Aluminum tube 100 mm, 250 mm or 400 mm	**V7-T2-10**
Base with aluminum tube and M20 thread	**15**	Aluminum tube 100 mm, 250 mm or 400 mm	**V7-T2-10**
Base with external fixing holes	**16**	—	**V7-T2-10**
Vertical base with bracket	**17**	—	**V7-T2-11**
Base with internal (on the inside) fixing holes	**18**	—	**V7-T2-10**
Base with built-in fixing screws (pre-assembled)	**19**	—	**V7-T2-10**
Base with base adapter for slipping onto place (rapid mounting and wiring system)	**20**	Aluminum tube 100 mm, 250 mm or 400 mm	**V7-T2-10**
Base with base adapter for slipping onto place (rapid mounting and wiring system) and SmartWire-DT™ connection	**21**	Aluminum tube 100 mm	**V7-T2-10**
Mounting Bracket			
Bracket	**22**	Accessory	**V7-T2-19**
Bracket	**23**	Accessory, includes M20 cable gland	**V7-T2-19**

Product Selection—SL7

Complete Devices

2

SL7-100-L-R_

Continuous Light, LED, UL Type 4/4X/13, IP66

Rated Operational Voltage (U_e V)	Number of Modules	Color	Function	Standard Pack	Catalog Number
Base Module with Foot and 100 mm Tube					
24 Vac/Vdc	2	Red/Green		1	**SL7-100-L-RG-24LED**
	3	Red/Amber/ Green			**SL7-100-L-RAG-24LED**

Light Module with LED

SL7-L_

Continuous Light, UL Type 4/4X/13, IP66

Rated Operational Voltage (U_e V)	Color	Function	Standard Pack	Catalog Number
24 Vac/Vdc	Blue		1	**SL7-L24-B**
	Green			**SL7-L24-G**
	Red			**SL7-L24-R**
	White			**SL7-L24-W**
	Yellow			**SL7-L24-Y**
	Amber			**SL7-L24-A**
110/120 Vac	Blue		1	**SL7-L120-B**
	Green			**SL7-L120-G**
	Red			**SL7-L120-R**
	White			**SL7-L120-W**
	Yellow			**SL7-L120-Y**
	Amber			**SL7-L120-A**
230/240 Vac	Blue		1	**SL7-L230-B**
	Green			**SL7-L230-G**
	Red			**SL7-L230-R**
	White			**SL7-L230-W**
	Yellow			**SL7-L230-Y**
	Amber			**SL7-L230-A**

Light Module with LED, continued

SL7-BL_

Flashing Light, UL Type 4/4X/13, IP66, 2 Hz

Rated Operational Voltage (U_e V)	Color	Function	Standard Pack	Catalog Number
24 Vac/Vdc	Blue	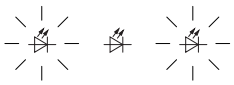	1	**SL7-BL24-B**
	Green			**SL7-BL24-G**
	Red			**SL7-BL24-R**
	White			**SL7-BL24-W**
	Yellow			**SL7-BL24-Y**
	Amber			**SL7-BL24-A**
110/120 Vac	Blue		1	**SL7-BL120-B**
	Green			**SL7-BL120-G**
	Red			**SL7-BL120-R**
	White			**SL7-BL120-W**
	Yellow			**SL7-BL120-Y**
	Amber			**SL7-BL120-A**
230/240 Vac	Blue	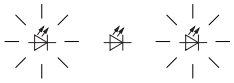	1	**SL7-BL230-B**
	Green			**SL7-BL230-G**
	Red			**SL7-BL230-R**
	White			**SL7-BL230-W**
	Yellow			**SL7-BL230-Y**
	Amber			**SL7-BL230-A**

SL7-FL_

Strobe Light, UL Type 4/4X/13, IP66, 1.4 Hz

Rated Operational Voltage (U_e V)	Color	Function	Standard Pack	Catalog Number
24 Vac/Vdc	Blue		1	**SL7-FL24-B**
	Green			**SL7-FL24-G**
	Red			**SL7-FL24-R**
	White			**SL7-FL24-W**
	Yellow			**SL7-FL24-Y**
	Amber			**SL7-FL24-A**
110/120 Vac	Blue		1	**SL7-FL120-B**
	Green			**SL7-FL120-G**
	Red			**SL7-FL120-R**
	White			**SL7-FL120-W**
	Yellow			**SL7-FL120-Y**
	Amber			**SL7-FL120-A**
230/240 Vac	Blue		1	**SL7-FL230-B**
	Green			**SL7-FL230-G**
	Red			**SL7-FL230-R**
	White			**SL7-FL230-W**
	Yellow			**SL7-FL230-Y**
	Amber			**SL7-FL230-A**

SL7 Light Module with High-Output LED

2

SL7-L24-_

Continuous Light, UL Type 4/4X/13, IP66

Rated Operational Voltage (U_e V)	Color	Function	Standard Pack	Catalog Number
High-Performance LED for Maximum Signaling Effect				
24 Vac/Vdc	Blue		1	**SL7-L24-B-HP**
	Green			**SL7-L24-G-HP**
	Red			**SL7-L24-R-HP**
	White			**SL7-L24-W-HP**
	Yellow			**SL7-L24-Y-HP**
	Amber			**SL7-L24-A-HP**

SL7-FL24-_-HP

Strobe Light, UL Type 4/4X/13, IP66

Rated Operational Voltage (U_e V)	Color	Function	Standard Pack	Catalog Number
High-Performance LED for Maximum Signaling Effect, 1.4 Hz				
24 Vac/Vdc	Blue		1	**SL7-FL24-B-HP**
	Green			**SL7-FL24-G-HP**
	Red			**SL7-FL24-R-HP**
	White			**SL7-FL24-W-HP**
	Yellow			**SL7-FL24-Y-HP**
	Amber			**SL7-FL24-A-HP**

SL7-FL24-_-HPM

Multi-Strobe Light, UL Type 4/4X/13, IP66

Rated Operational Voltage (U_e V)	Color	Function	Standard Pack	Catalog Number
High-Performance LED for Maximum Signaling Effect, 1–2.6 Hz				
24 Vac/Vdc	Blue	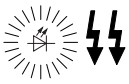	1	**SL7-FL24-B-HPM**
	Green			**SL7-FL24-G-HPM**
	Red			**SL7-FL24-R-HPM**
	White			**SL7-FL24-W-HPM**
	Yellow			**SL7-FL24-Y-HPM**
	Amber			**SL7-FL24-A-HPM**

SL7 Light Module for Incandescent Bulb

SL7-L-_

Continuous Light, UL Type 4/4X/13, IP66

For incandescent bulb selection, see **Page V7-T2-19**.

Rated Operational Voltage (U_e V)	Color	Function	Standard Pack	Catalog Number
Without Light Elements, Incandescent Bulb, Maximum 7W				
<250 Vac/Vdc	Blue		1	**SL7-L-B**
	Green			**SL7-L-G**
	Red			**SL7-L-R**
	White			**SL7-L-W**
	Yellow			**SL7-L-Y**
	Amber			**SL7-L-A**

SL7 Acoustic Modules

SL7-AP_

Continuous Tone or Pulsed Tone, UL Type 4/4X/13, IP66 ①

Adjustable with internal DIP switches.
Sound pressure 100 dB, adjustable with internal potentiometer.
f = 2800 Hz.

Rated Operational Voltage (U_e V)	Rated Operational Current (I_e mA)	Color	Function	Sound Type	Standard Pack	Catalog Number
24 Vac/Vdc	Maximum 92	Black			1	**SL7-AP24**
110/120 Vac	Maximum 41	Black				**SL7-AP120**
230/240 Vac	Maximum 43	Black				**SL7-AP230**

SL7-AP_-E

Continuous Tone or Pulsed Tone, External Actuation, UL Type 4/4X/13, IP66 ①

Assigned two inputs (two modules).
Sound pressure 100 dB, adjustable with internal potentiometer.
f = 2800 Hz.

Rated Operational Voltage (U_e V)	Rated Operational Current (I_e mA)	Color	Function	Sound Type	Standard Pack	Catalog Number
24 Vac/Vdc	Maximum 92	Black			1	**SL7-AP24-E**
110/120 Vac	Maximum 41	Black				**SL7-AP120-E**
230/240 Vac	Maximum 43	Black				**SL7-AP230-E**

SL7-AP_-M

Multi-Tone; Eight Tones, UL Type 4/4X/13, IP66 ①

Adjustable with internal DIP switch.
Sound pressure 100 dB, adjustable with internal potentiometer.
f = 500–2700 Hz.

Rated Operational Voltage (U_e V)	Rated Operational Current (I_e mA)	Color	Function	Sound Type	Standard Pack	Catalog Number
24 Vac/Vdc	Maximum 115	Black			1	**SL7-AP24-M**
110/120 Vac	Maximum 45	Black				**SL7-AP120-M**
230/240 Vac	Maximum 43	Black				**SL7-AP230-M**

Note

① Place only at the highest position on a pole.

SL7 Base Modules

For Horizontal Mounting—Includes Cover, Maximum 5 Modules

	Description	Tube Length	Color	Standard Pack	For use with …	Catalog Number
SL7-CB-_	Base with aluminum tube and plastic foot Spring-loaded terminals	100 mm	Black aluminum color tube	1	SL7-L-… SL7-BL-… SL7-FL-… SL7-AP-…	**SL7-CB-100**
		250 mm				**SL7-CB-250**
		400 mm				**SL7-CB-400**
SL7-CB-T-_	Base with aluminum tube and M20 threaded base Spring-loaded terminals	100 mm	Black aluminum color tube	1	SL7-L-… SL7-BL-… SL7-FL-… SL7-AP-…	**SL7-CB-T-100**
		250 mm				**SL7-CB-T-250**
		400 mm				**SL7-CB-T-400**
SL7-CB-IMH	Base with internal (on the inside) fixing holes Spring-loaded terminals	—	Black	1	SL7-L-… SL7-BL-… SL7-FL-… SL7-AP-…	**SL7-CB-IMH**
SL7-CB-IMS	Base with built-in (pre-assembled) fixing screws Spring-loaded terminals	—	Black	1	SL7-L-… SL7-BL-… SL7-FL-… SL7-AP-…	**SL7-CB-IMS**
SL7-CB-EMH	Base with external fixing holes Spring-loaded terminals	—	Black	1	SL7-L-… SL7-BL-… SL7-FL-… SL7-AP-…	**SL7-CB-EMH**

SL7 Base Modules, continued

For Horizontal Mounting—Includes Cover, Maximum 5 Modules, continued

SL7-FMS_

Description	Tube Length	Color	Standard Pack	For use with …	Catalog Number
Base with base adapter for slipping onto place (rapid mounting and wiring system) Screw terminals	100 mm	Black aluminum color tube	1	SL7-L-… SL7-BL-… SL7-FL-… SL7-AP-…	**SL7-FMS-100**
	250 mm				**SL7-FMS-250**
	400 mm				**SL7-FMS-400**

SL7-SWD

Description	Tube Length	Color	Standard Pack	For use with …	Catalog Number
Base with base adapter for slipping onto place (rapid mounting and wiring system) Blade terminal SWD4-8MF2 Maximum 0.3A per module External power supply connectable (24 Vdc) Configurable with SWD-Assist (planning and ordering help)	100 mm	—	1	SL7-L-… SL7-BL-… SL7-FL-… SL7-AP-…	**SL7-SWD**

SL7-CB-FW

For Vertical Mounting—Includes Cover, Maximum 5 Modules

Description	Color	Standard Pack	For use with …	Catalog Number
Vertical base with bracket Spring-loaded terminals	Black	1	SL7-L-… SL7-BL-… SL7-FL-… SL7-AP-…	**SL7-CB-FW**

SL7-CB-D

For Mounting on Both Sides—Includes Cover, Maximum 2 x 5 Modules

Description	Color	Standard Pack	For use with …	Catalog Number
Base with external fixing holes Spring-loaded terminals	Black	1	SL7-L-… SL7-BL-… SL7-FL-… SL7-AP-…	**SL7-CB-D**

Component Identification—SL4

Component Identification

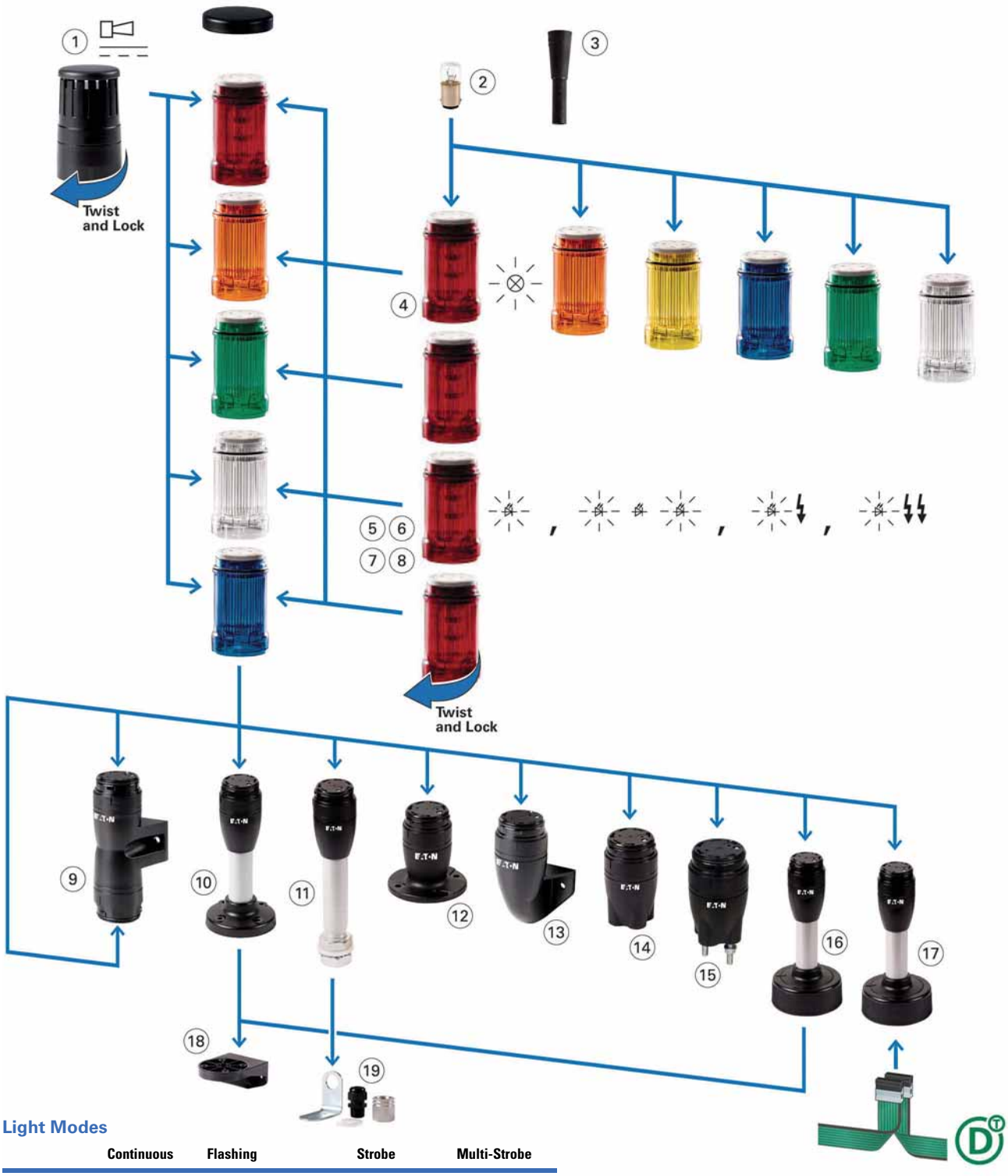

Light Modes

	Continuous	Flashing	Strobe	Multi-Strobe
Incandescent		—	—	—
LED				

SL4—Component Identification Descriptions

Item	Item Number	Description	Page Reference
Acoustic Modules			
Sound pressure 80 dB, adjustable with internal potentiometer, frequency 4000 Hz Easy mounting with bayonet mount, set up as highest module Permanently integrated cover plate Operating mode: 100% DF (duty factor) Degree of protection: UL Type 4/4X/13, IP66	**1**	Continuous tone or pulsed tone, adjustable with internal DIP switches Frequency: 2800 Hz	**V7-T2-16**
Incandescent Bulb	**2**	Accessory	**V7-T2-19**
Tool for Replacing Incandescent Bulb	**3**	Accessory	**V7-T2-19**
Light Modules			
Easy mounting with bayonet mount, modules can be arranged in any order Without light element (incandescent bulb with BA15d socket), easy mounting with bayonet mount. Operating mode: 100% DF (duty factor) Flashing frequency 2 Hz Degree of protection: UL Type 4/4X/13, IP66			
Light Module for Incandescent Bulb			
Continuous light	**4**	BA15d socket, without incandescent bulb	**V7-T2-16**
Light Modules with LED			
Continuous light	**5**		**V7-T2-14**
Flashing light	**6**	Flashing frequency: 2 Hz	**V7-T2-15**
Strobe light	**7**	Flashing frequency: 1.4 Hz	**V7-T2-15**
Strobe light, multi-strobe light	**8**	High-performance LED, with various strobe sequences Flashing frequency: 1–2.6 Hz	**V7-T2-16**
Base Modules			
Easy mounting with bayonet mount, includes cover plate, with spring-cage terminals Degree of protection: UL Type 4/4X/13, IP66			
Base for mounting on both sides	**9**	Max. 2 x 5 modules that can be actuated individually	**V7-T2-17**
Base with aluminum tube and plastic foot	**10**	Aluminum tube 100 mm, 250 mm or 400 mm	**V7-T2-17**
Base with aluminum tube and M20 thread	**11**	Aluminum tube 100 mm, 250 mm or 400 mm	**V7-T2-17**
Base with external fixing holes	**12**	—	**V7-T2-17**
Vertical base with bracket	**13**	—	**V7-T2-17**
Base with internal (on the inside) fixing holes	**14**	—	**V7-T2-17**
Base with built-in fixing screws (pre-assembled)	**15**	—	**V7-T2-17**
Base with base adapter for slipping onto place (rapid mounting and wiring system)	**16**	Aluminum tube 100 mm, 250 mm or 400 mm	**V7-T2-17**
Base with base adapter for slipping onto place (rapid mounting and wiring system) and SmartWire-DT™ connection	**17**	Aluminum tube 100 mm	**V7-T2-17**
Mounting Bracket			
Bracket	**18**	Accessory	**V7-T2-19**
Bracket	**19**	Accessory, includes M20 cable gland	**V7-T2-19**

Product Selection—SL4

Complete Devices

SL4-100-L-R_

Continuous Light, LED, UL Type 4/4X/13, IP66

Rated Operational Voltage (U_e V)	Number of Modules	Color	Function	Standard Pack	Catalog Number
Base Module with Foot and 100 mm Tube					
24 Vac/Vdc	2	Red/Green		1	**SL4-100-L-RG-24LED**
	3	Red/Amber/ Green			**SL4-100-L-RAG-24LED**

Light Module with LED

SL4-L_

Continuous Light, UL Type 4/4X/13, IP66

Rated Operational Voltage (U_e V)	Color	Function	Standard Pack	Catalog Number
24 Vac/Vdc	Blue		1	**SL4-L24-B**
	Green			**SL4-L24-G**
	Red			**SL4-L24-R**
	White			**SL4-L24-W**
	Yellow			**SL4-L24-Y**
	Amber			**SL4-L24-A**
110/120 Vac	Blue		1	**SL4-L120-B**
	Green			**SL4-L120-G**
	Red			**SL4-L120-R**
	White			**SL4-L120-W**
	Yellow			**SL4-L120-Y**
	Amber			**SL4-L120-A**
230/240 Vac	Blue		1	**SL4-L230-B**
	Green			**SL4-L230-G**
	Red			**SL4-L230-R**
	White			**SL4-L230-W**
	Yellow			**SL4-L230-Y**
	Amber			**SL4-L230-A**

Light Module with LED, continued

SL4-BL_

Flashing Light, UL Type 4/4X/13, IP66, 2 Hz

Rated Operational Voltage (U_e V)	Color	Function	Standard Pack	Catalog Number
24 Vac/Vdc	Blue	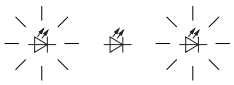	1	SL4-BL24-B
	Green			SL4-BL24-G
	Red			SL4-BL24-R
	White			SL4-BL24-W
	Yellow			SL4-BL24-Y
	Amber			SL4-BL24-A
110/120 Vac	Blue		1	SL4-BL120-B
	Green			SL4-BL120-G
	Red			SL4-BL120-R
	White			SL4-BL120-W
	Yellow			SL4-BL120-Y
	Amber			SL4-BL120-A
230/240 Vac	Blue	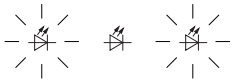	1	SL4-BL230-B
	Green			SL4-BL230-G
	Red			SL4-BL230-R
	White			SL4-BL230-W
	Yellow			SL4-BL230-Y
	Amber			SL4-BL230-A

SL4-FL_

Strobe Light, UL Type 4/4X/13, IP66, 1.4 Hz

Rated Operational Voltage (U_e V)	Color	Function	Standard Pack	Catalog Number
24 Vac/Vdc	Blue		1	SL4-FL24-B
	Green			SL4-FL24-G
	Red			SL4-FL24-R
	White			SL4-FL24-W
	Yellow			SL4-FL24-Y
	Amber			SL4-FL24-A
110/120 Vac	Blue		1	SL4-FL120-B
	Green			SL4-FL120-G
	Red			SL4-FL120-R
	White			SL4-FL120-W
	Yellow			SL4-FL120-Y
	Amber			SL4-FL120-A
230/240 Vac	Blue		1	SL4-FL230-B
	Green			SL4-FL230-G
	Red			SL4-FL230-R
	White			SL4-FL230-W
	Yellow			SL4-FL230-Y
	Amber			SL4-FL230-A

Light Module with LED, continued

2

SL4-FL24-_-M

Multi-Strobe Light, UL Type 4/4X/13, IP66

Rated Operational Voltage (U_e V)	Color	Function	Standard Pack	Catalog Number
LED for Effective Signaling Effect With Various Strobe Sequences, 1–2.6 Hz				
24 Vac/Vdc	Blue	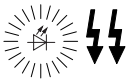	1	**SL4-FL24-B-M**
	Green			**SL4-FL24-G-M**
	Red			**SL4-FL24-R-M**
	White			**SL4-FL24-W-M**
	Yellow			**SL4-FL24-Y-M**
	Amber			**SL4-FL24-A-M**

SL4 Light Module for Incandescent Bulb

SL4-L-_

Continuous Light, UL Type 4/4X/13, IP66

For incandescent bulb selection, see **Page V7-T2-19**.

Rated Operational Voltage (U_e V)	Color	Function	Standard Pack	Catalog Number
Without Light Elements, Incandescent Bulb, Maximum 4W				
<250 Vac/Vdc	Blue		1	**SL4-L-B**
	Green			**SL4-L-G**
	Red			**SL4-L-R**
	White			**SL4-L-W**
	Yellow			**SL4-L-Y**
	Amber			**SL4-L-A**

SL4 Acoustic Modules

SL4-AP_

Continuous Tone or Pulsed Tone, UL Type 4/4X/13, IP66

Adjustable with internal DIP switches.
Sound pressure 80 dB, adjustable with internal potentiometer.
f = 4000 Hz.

Rated Operational Voltage (U_e V)	Rated Operational Current (I_e mA)	Color	Function	Sound Type	Standard Pack	Catalog Number
Place only at the highest position on a pole.						
24 Vac/Vdc	Maximum 39	Black			1	**SL4-AP24**
110/120 Vac	Maximum 21	Black				**SL4-AP120**
230/240 Vac	Maximum 21	Black				**SL4-AP230**

SL4 Base Modules

For Horizontal Mounting—Includes Cover, Maximum 5 Modules

	Description	Tube Length	Color	Standard Pack	For use with …	Catalog Number
SL4-PIB-_	Base with aluminum tube and plastic foot Spring-loaded terminals	100 mm	Black aluminum color tube	1	SL4-L-… SL4-BL-… SL4-FL-… SL4-AP-…	**SL4-PIB-100**
		250 mm				**SL4-PIB-250**
		400 mm				**SL4-PIB-400**
SL4-PIB-T-_	Base with aluminum tube and M20 threaded base Spring-loaded terminals	100 mm	Black aluminum color tube	1	SL4-L-… SL4-BL-… SL4-FL-… SL4-AP-…	**SL4-PIB-T-100**
		250 mm				**SL4-PIB-T-250**
		400 mm				**SL4-PIB-T-400**
SL4-PIB-IMH	Base with internal (on the inside) fixing holes Spring-loaded terminals	—	Black	1	SL4-L-… SL4-BL-… SL4-FL-… SL4-AP-…	**SL4-PIB-IMH**
SL4-PIB-IMS	Base with built-in (pre-assembled) fixing screws Spring-loaded terminals	—	Black	1	SL4-L-… SL4-BL-… SL4-FL-… SL4-AP-…	**SL4-PIB-IMS**
SL4-PIB-EMH	Base with external fixing holes Spring-loaded terminals	—	Black	1	SL4-L-… SL4-BL-… SL4-FL-… SL4-AP-…	**SL4-PIB-EMH**

SL4 Base Modules, continued

For Horizontal Mounting—Includes Cover, Maximum 5 Modules, continued

SL4-FMS_

Description	Tube Length	Color	Standard Pack	For use with …	Catalog Number
Base with base adapter for slipping onto place (rapid mounting and wiring system) Screw terminals	100 mm	Black aluminum color tube	1	SL4-L-… SL4-BL-… SL4-FL-… SL4-AP-…	**SL4-FMS-100**
	250 mm				**SL4-FMS-250**
	400 mm				**SL4-FMS-400**

SL4-SWD

Description	Tube Length	Color	Standard Pack	For use with …	Catalog Number
Base with base adapter for slipping onto place (rapid mounting and wiring system) Blade terminal SWD4-8MF2 Maximum 0.3A per module External power supply connectable (24 Vdc) Configurable with SWD-Assist (planning and ordering help)	100 mm	—	1	SL4-L-… SL4-BL-… SL4-FL-… SL4-AP-…	**SL4-SWD**

SL4-PIB-FW

For Vertical Mounting—Includes Cover, Maximum 5 Modules

Description	Color	Standard Pack	For use with …	Catalog Number
One-sided base with bracket Spring-loaded terminals	Black	1	SL4-L-… SL4-BL-… SL4-FL-… SL4-AP-…	**SL4-PIB-FW**

SL4-PIB-D

For Mounting on Both Sides—Includes Cover, Maximum 2 x 5 Modules

Description	Color	Standard Pack	For use with …	Catalog Number
Base with external fixing holes Spring-loaded terminals	Black	1	SL4-L-… SL4-BL-… SL4-FL-… SL4-AP-…	**SL4-PIB-D**

Accessories

SL7 and SL4 Series

Mounting Brackets

SL7/4-FW

Mounting Brackets for Vertical Mounting, Plastic

Standard Pack	For Use With …	Catalog Number
1	SL4-PIB… SL7-CB...	**SL7/4-FW**

SL7/4-FW-T

M20 Cable Gland for Vertical Mounting, Metal (Includes Mounting Bracket)

Standard Pack	For Use With …	Catalog Number
1	SL4-PIB-T… SL7-CB-T...	**SL7/4-FW-T**

Incandescent Bulb Tool

SL7/4-BET

Tool for Replacing Incandescent Bulb

Standard Pack	For Use With …	Catalog Number
1	SL7-L-… SL4-L-…	**SL7/4-BET**

Incandescent Bulbs

SL7 Series

SL7-L12

Incandescent Bulbs, Mounting: Ba15d

Lifespan (h)	Rated Operational Voltage (U_e V)	Power (Watts)	Standard Pack	For Use With …	Catalog Number
3000	12	5	1	SL7-L-…	**SL7-L12**
	24	6.5			**SL7-L24**
	120	7			**SL7-L120**
	230	6.5			**SL7-L230**

SL4 Series

SL4-L12

Incandescent Bulbs, Mounting: Ba15d

Lifespan (h)	Rated Operational Voltage (U_e V)	Power (Watts)	Standard Pack	For Use With …	Catalog Number
3000	12	4	1	SL4-L-…	**SL4-L12**
	24				**SL4-L24**
	120				**SL4-L120**
	230				**SL4-L230**

Technical Data and Specifications

SL7 Series

SL7 General Specifications

Description	Specification
Standards	IEC/EN 60947-5-1
Lens color	Blue, green, red, clear, yellow, amber
Number of signal elements	Max. 5 with standard base Max. 10 with base for mounting on both sides
Mechanical Ratings	
Shock (IEC 68-2-27)	11 ms, 15g
Vibration (IEC 68-2-6)	20 sweeps 10–150 Hz, 1g
Climate Conditions	
Climatic proofing	Damp heat, constant, to IEC 60068-2-78 Damp heat, cyclic, to IEC 60069-2-30
Operating temperature	–22° to +140°F (–30° to +60°C)
Storage temperature	–22° to +185°F (–30° to +85°C)
Environmental Ratings	
IEC degree of protection	UL Type 4/4X/13, IP66 IEC/EN 60529
Protection type UL	Type 4/4X/13
Materials	
Cover	Polycarbonate
Lenses	Polycarbonate
Stacklight base	Polycarbonate
Tubes	Aluminum
Terminal Capacity	
Solid or flexible conductor	0.13–2.5 mm^2
Flexible with ferrule with plastic collar	0.25–1.5 mm^2 AWG 24–AWG 14
Contacts	
Rated impulse withstand voltage (U_{imp})	4000 Vac
Rated insulation voltage (U_i)	250V
Overvoltage category/pollution degree	III/3

SL7 Light Module Specifications

	Unit	SL7-L-…-…	SL7-BL-…-…	SL7-FL-…-…	SL7-L24-…-HP	SL7-FL24-…-HP	SL7-FL24-…-HPM	SL7-L-…
Type of light		Continuous light	Flashing light	Strobe light	Continuous light	Strobe light	Multi-strobe light	Continuous light
Light elements		LED	LED	LED	High-performance LED	High-performance LED	High-performance LED	Incandescent bulb (max. 7W)
Mounting		—	—	—	—	—	—	Ba15d
Flashing/strobe frequency		—	2 Hz	1.4 Hz	—	1.4 Hz	1–2.6 Hz	—
Transmission angle		360°	360°	360°	360°	360°	360°	360°
Leakage current	A	< 0.003	< 0.003	<0.003	< 0.003	< 0.003	< 0.003	< 0.003
Current-/power consumption								
24 Vac/Vdc	A	0.049–0.054	0.058	0.130–0.135	0.170–0.200	0.260–0.265	0.260–0.265	—
110/120 Vac	A	0.028–0.031	0.028–0.030	0.010	—	—	—	—
230/240 Vac	A	0.027–0.028	0.030–0.031	0.010	—	—	—	—
Power consumption		—	—	—	—	—	—	Max. 7W with the specified voltages
Voltage levels		24 Vac/Vdc ± 10% 110/120 Vac ± 10% 230/240 Vac ± 10%	24 Vac/Vdc ± 10% 110/120 Vac ± 10% 230/240 Vac ± 10%	24 Vac/Vdc ± 10% 110/120 Vac ± 10% 230/240 Vac ± 10%	18–30 Vdc/ 18–26 Vac	18–30 Vdc/ 18–26 Vac	18–30 Vdc/ 18–26 Vac	Up to 250 Vac/Vdc
Lifespan	h	100,000	100,000	100,000	50,000	50,000	50,000	3000
Weight	g	80	80	80	80	80	80	80

SL7 Acoustic Module Specifications

	Unit	SL7-AP…	SL7-AP…-E	SL7-AP…-M
Type of tone		Continuous or pulsed tone	Continuous or pulsed tone	Continuous or pulsed tone Eight types of sound
Types of sound		Two versions, table of sound types	Two versions, table of sound types	Eight versions, table of sound types
Sound setting		Internal; single-pole DIP	Can be externally actuated	Internal; three-pole DIP
Sound pressure	dB	Max.: 100 Min.: 88	Max.: 100 Min.: 88	Max.: 100 Min.: 88
Sound pressure level adjustment		Built-in, potentiometer	Built-in, potentiometer	Built-in, potentiometer
Transmission angle		360°	360°	360°
Current-/power consumption				
24 Vac/Vdc	A	0.092	0.092	0.115
110/120 Vac	A	0.041	0.041	0.045
230/240 Vac	A	0.043	0.043	0.043
Voltage levels		24 Vac/Vdc ± 10% 110/120 Vac ± 10% 230/240 Vac ± 10%	24 Vac/Vdc ± 10% 110/120 Vac ± 10% 230/240 Vac ± 10%	24 Vac/Vdc ± 10% 110/120 Vac ± 10% 230/240 Vac ± 10%
Weight	g	102	102	102

SL7 Table of Sound Types

	Sound Type	Frequency (Hz)	Diagram	Repeat Rate	DIP Switch Position	Maximum Volume at 1M (dB)
SL7-AP…	Continuous tone	Approx. 2800		—	—	100
	Pulsed tone	Approx. 2800		Approx. 2 Hz	—	100
SL7-AP…-E	Continuous tone	Approx. 2800		—	—	100
	Pulsed tone	Approx. 2800		Approx. 2 Hz	—	100
SL7-AP…-M	Continuous tone	2700		—	ON Tone 01	100
	Continuous tone	1350		—	ON Tone 02	100
	Pulsed tone	2700		250 ms on, 250 ms off	ON Tone 03	100
	Pulsed tone	1350		250 ms on, 250 ms off	ON Tone 04	100
	Falling	1200–500		1 Hz	ON Tone 05	98
	Rising	500–1200		Rising 3s, 0.5s off	ON Tone 06	98
	Alternating	800–1000		2 Hz	ON Tone 07	94
	rising/falling	500–1500		10 Hz	ON Tone 08	94

SL4 Series

SL4 General Specifications

Description	Specification
Standards	IEC/EN 60947-5-1
Lens color	Blue, green, red, clear, yellow, orange
Number of signal elements	Max. 5 with standard base Max. 10 with base for mounting on both sides
Mounting position	As required
Mechanical Ratings	
Mechanical shock resistance	>15g according to IEC 60068-2-27 Shock duration 11 ms Sinusoidal
Climate Conditions	
Climatic proofing	Damp heat, constant, to IEC 60068-2-78 Damp heat, cyclic, to IEC 60069-2-30
Ambient temperature	–22°F to +140°F (–30°C to +60°C)
Environmental Ratings	
IEC degree of protection	UL Type 4/4X/13, IP66 IEC/EN 60529
Protection type UL	Type 4/4X/13
Materials	
Enclosure	Polycarbonate (PC), black
Cap	Polycarbonate (PC)
Terminal Capacity	
Solid or flexible conductor	0.2–1.5 mm^2
Solid or flexible conductor, with ferrule	0.25–1.5 mm^2
Flexible with ferrule with plastic collar	0.25–0.75 mm^2 AWG 24–AWG 16
Contacts	
Rated impulse withstand voltage (U_{imp})	4000 Vac
Rated insulation voltage (U_i)	250V
Overvoltage category/pollution degree	III/3

SL4 Light Module Specifications

	Unit	SL4-L…-…	SL4-BL…-…	SL4-FL…-…	SL4-FL24-…-M	SL4-L…
Type of light		Continuous light	Flashing light	Strobe light	Multi-strobe light	Continuous light
Light elements		LED	LED	LED	LED	Incandescent bulb (max. 4W)
Mounting		—	—	—	—	Ba15d
Flashing/strobe frequency		—	2 Hz	1.4 Hz	1–2.6 Hz	—
Transmission angle		360°	360°	360°	360°	360°
Leakage current	A	< 0.003	< 0.003	< 0.003	< 0.003	< 0.003
Current/power consumption						
24 Vac/Vdc	A	0.022–0.033	0.028–0.036	0.035–0.065	0.048–0.068	—
110/120 Vac	A	0.030	0.030	0.10	—	—
230/240 Vac	A	0.030	0.030	0.10	—	—
Power consumption		—	—	—	—	Maximum 4W with the specified voltages
Voltage levels		24 Vac/Vdc ± 10% 110/120 Vac ± 10% 230/240 Vac ± 10%	24 Vac/Vdc ± 10% 110/120 Vac ± 10% 230/240 Vac ± 10%	24 Vac/Vdc ± 10% 110/120 Vac ± 10% 230/240 Vac ± 10%	24 Vac/Vdc ± 10%	Up to 250 Vac/Vdc
Lifespan	h	100,000	100,000	100,000	100,000	100,000
Weight	g	45	45	45	45	45

SL4 Acoustic Module Specifications

	Unit	SL4-AP…
Type of tone		Continuous or pulsed tone
Types of sound		Two versions, table of sound types
Sound setting		Internal; single-pole DIP
Sound pressure	dB	80
Sound pressure level adjustment		—
Sound pressure can be lowered to a minimum of		—
Transmission angle		360°
Current/power consumption		
24 Vac/Vdc	A	0.039
110/120 Vac	A	0.021
230/240 Vac	A	0.021
Voltage levels		24 Vac/Vdc ± 10% 110/120 Vac ± 10% 230/240 Vac ± 10%
Weight	g	43

SL4 Table of Sound Types

	Sound Type	Frequency (Hz)	Diagram	Repeat Rate	Maximum Volume at 1M (dB)
SL4-AP…	Continuous tone	Approx. 4000	———	—	80
	Pulsed tone	Approx. 4000	— — —	Approx. 2 Hz	80

Dimensions

Approximate Dimensions in Inches (mm)

SL7 Series

Complete Devices

SL7-100-L-RG-24LED

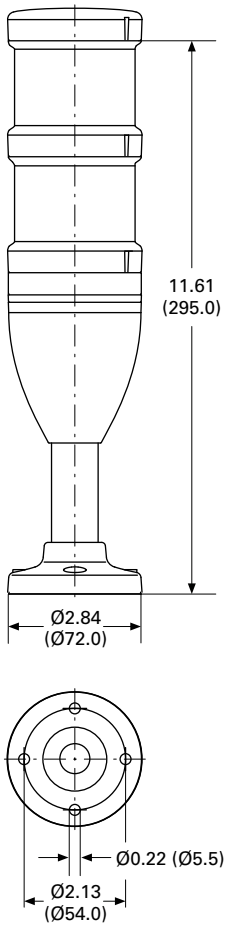

SL7-100-L-RYG-24LED

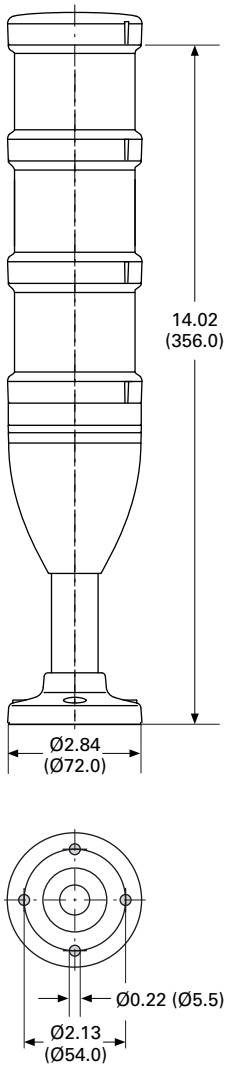

Light Modules

SL7-(B)(F)L…

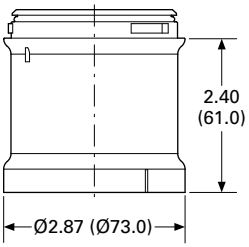

Acoustic Modules

SL7-AP…

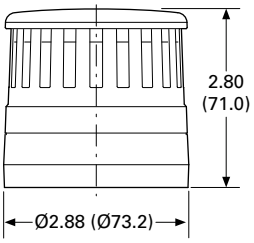

Approximate Dimensions in Inches (mm)

Basic Modules

SL7-CB-...

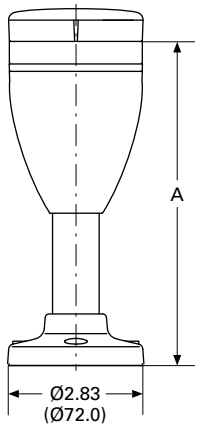

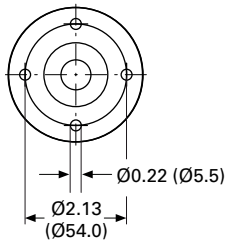

Catalog Number	A
SL7-CB-100	6.73 (171.0)
SL7-CB-250	12.64 (321.0)
SL7-CB-400	18.54 (471.0)

SL7-CB-T...

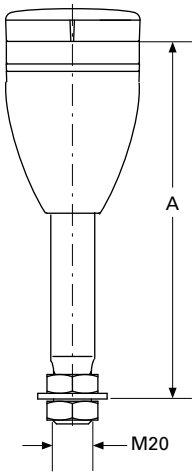

Catalog Number	A
SL7-CB-T-100	7.48 (190.0)
SL7-CB-T-250	13.38 (340.0)
SL7-CB-T-400	19.29 (490.0)

SL7-CB-D

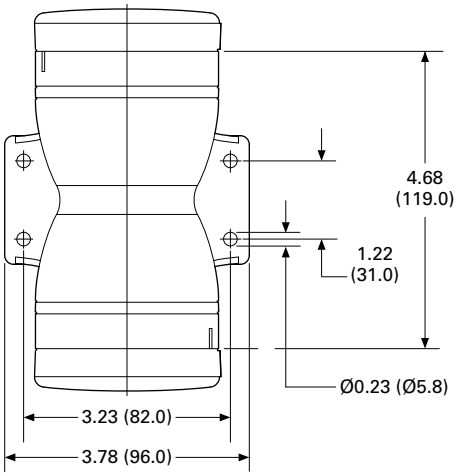

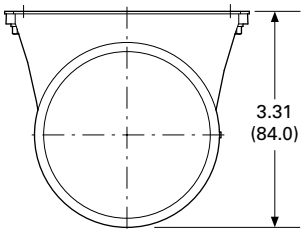

SL7-CB-EMH

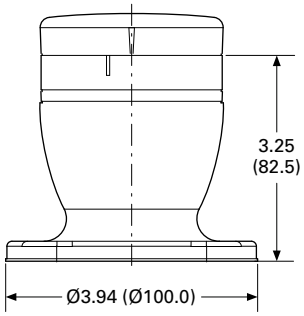

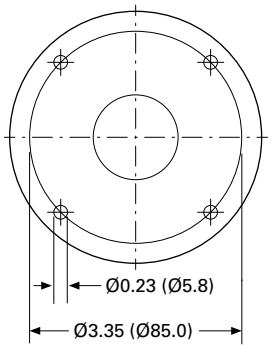

Approximate Dimensions in Inches (mm)

SL7-CB-FW

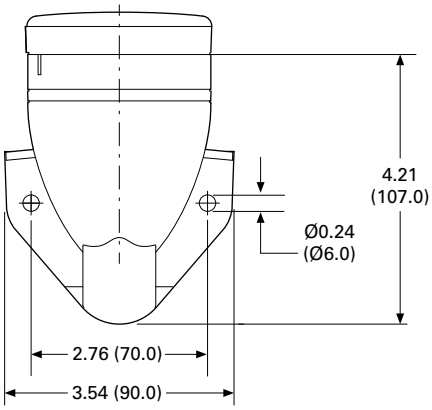

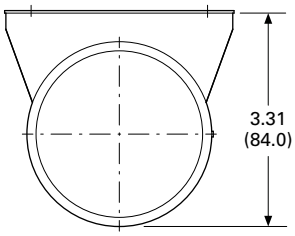

SL7-CB-IMH

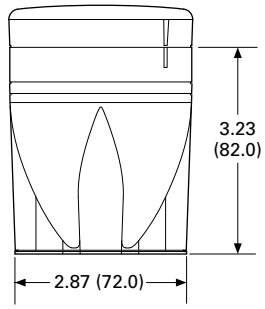

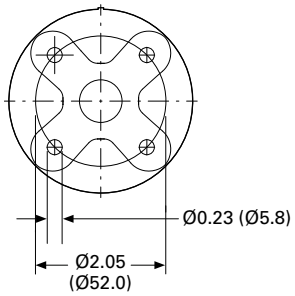

SL7-CB-IMS

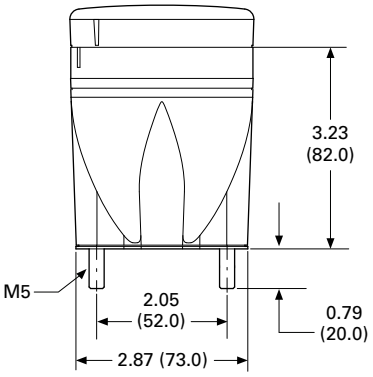

SL7-FMS-...

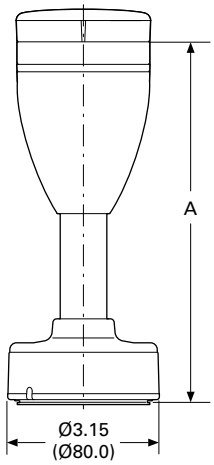

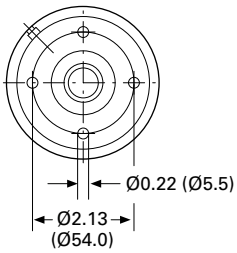

SL7-SWD ①

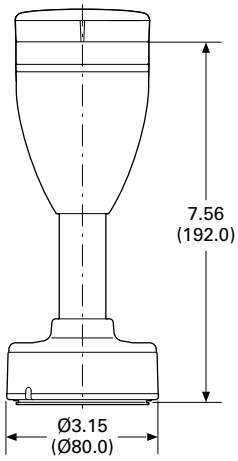

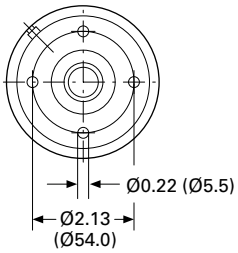

Catalog Number	A
SL7-FMS-100	7.55 (192.0)
SL7-FMS-250	13.46 (342.0)
SL7-FMS-400	19.37 (192.0)

Note

① For connecting to SmartWire-DT.

Approximate Dimensions in Inches (mm)

SL4 Series

Complete Devices

SL4-100-L-RG-24LED

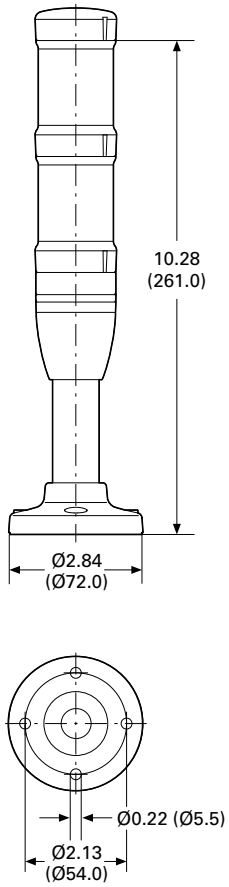

SL4-100-L-RYG-24LED

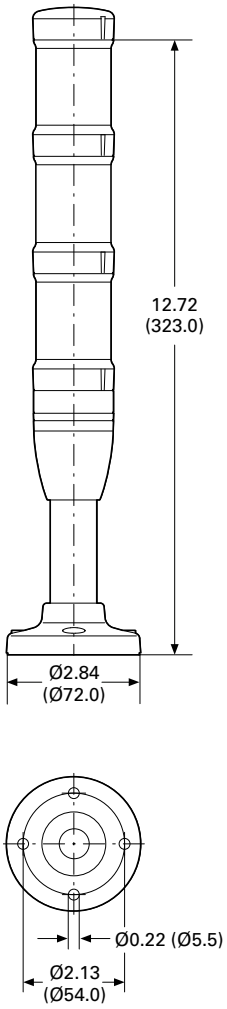

Light Modules

SL4-(B)(F)L…

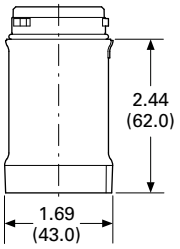

Acoustic Modules

SL4-AP…

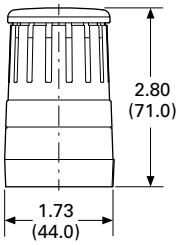

Approximate Dimensions in Inches (mm)

Basic Modules

SL4-PIB-...

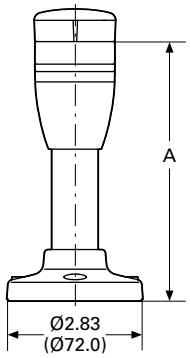

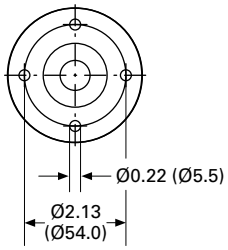

Catalog Number	A
SL4-PIB-100	3.53 (136.0)
SL4-PIB-250	11.26 (286.0)
SL4-PIB-400	17.16 (436.0)

SL4-PIB-T...

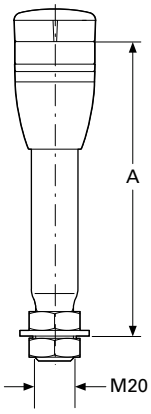

Catalog Number	A
SL4-PIB-T-100	5.90 (150.0)
SL4-PIB-T-250	11.81 (300.0)
SL4-PIB-T-400	17.72 (450.0)

SL4-PIB-D

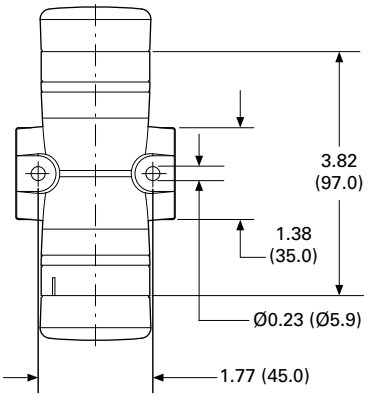

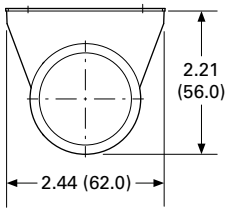

SL4-PIB-EMH

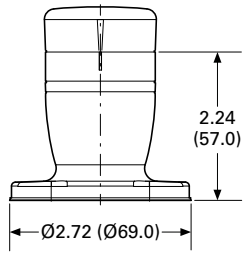

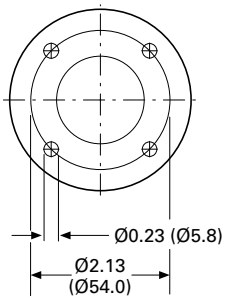

Approximate Dimensions in Inches (mm)

SL4-PIB-FW

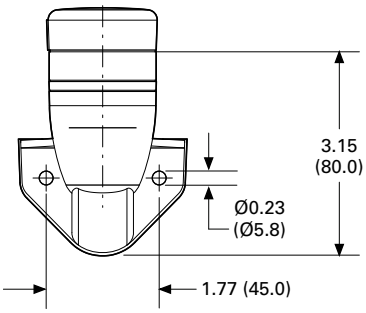

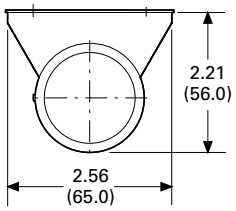

SL4-PIB-IMH

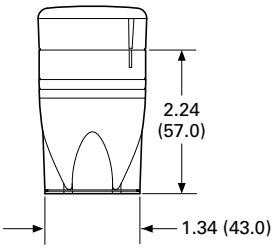

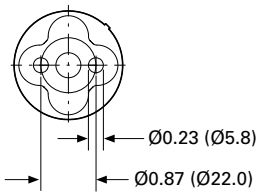

SL4-PIB-IMS

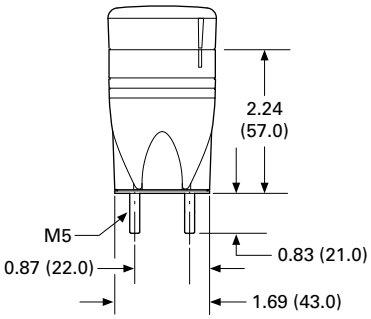

SL4-FMS-...

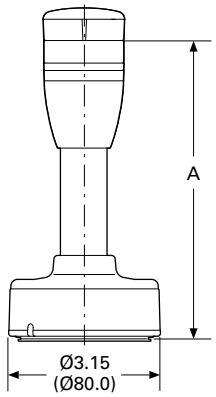

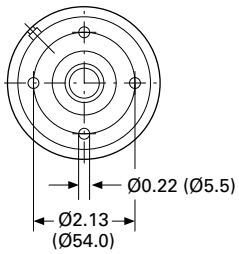

SL4-SWD ①

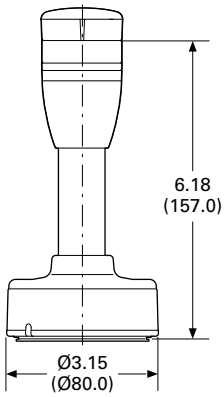

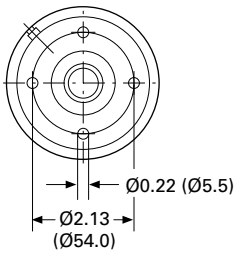

Catalog Number	A
SL4-FMS-100	6.18 (157.0)
SL4-FMS-250	12.09 (307.0)
SL4-FMS-400	17.99 (457.0)

Note

① For connecting to SmartWire-DT.

Approximate Dimensions in Inches (mm)

Mounting Brackets

SL7/4-FW

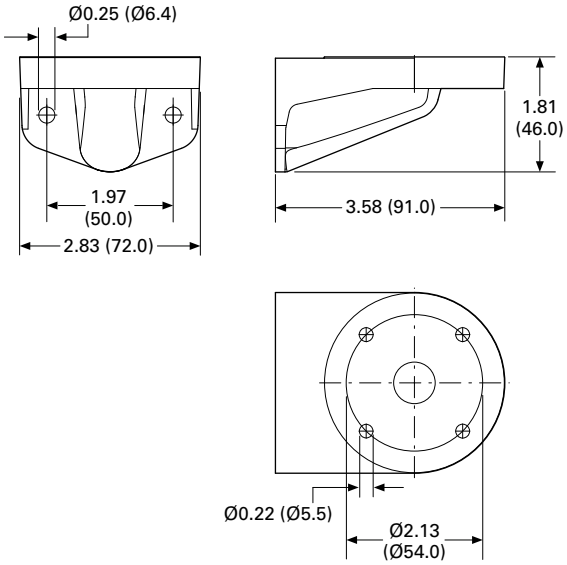

SL7/4-FW-T

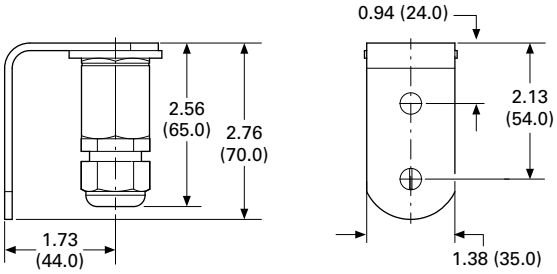

Incandescent Bulbs

SL7-L12 and SL4-L12

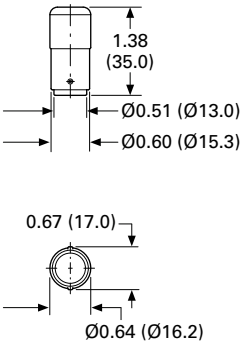

Tool for Replacing Incandescent Bulb

SL7/4-BET

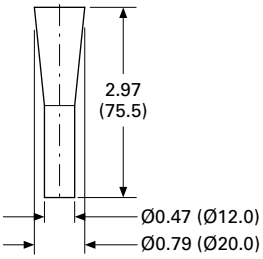

Stacklights—E26 Series

Contents

Description	*Page*
E26 Series	
Product Identification	**V7-T2-33**
Catalog Number Selection	**V7-T2-34**
Product Selection	**V7-T2-35**
Replacement Parts	**V7-T2-40**
Technical Data and Specifications	**V7-T2-41**
Ratings	**V7-T2-42**
Mounting Instructions	**V7-T2-43**
Dimensions	**V7-T2-44**

Product Description

The E26 stacklight unit is a modular system that provides illuminated and audible status indication in all directions. Easily assembled plug-in modular units include constant, flashing and strobe light units, as well as mono-tonal, bi-tonal, intermittent audible alarms. Stacklights may be assembled in a variety of configurations, which are identified in the Maximum Configurations table on **Page V7-T2-33**. Several lamp, color and mounting options further enhance the stacklight's versatility.

Features

- Modular construction
- Six lens colors
- Variety of lamp types and voltages
- Mono-tonal, bi-tonal and intermittent audible alarms

Benefits

- Combination of visible and audible alarms
- Modular components reduce inventory requirements, increase flexibility
- Steady and flashing modes allow one light to signal multiple conditions
- No-tools assembly permits easy lamp replacement

Standards and Certifications

- CE 60947-5-1
- UL 508—File No. E131568
- cUL C22.2 No. 14—File No. E131568

Ingress Protection

- Stacklight base and light units: IP65, NEMA 4, 4X and 13
- Alarm units: IP20, NEMA 1

Electrical Shock Protection

- Stacklight base and light unit: IP2X
- Alarm units: IP0X

Product Identification

Standard Stacklight Base

For use with incandescent or standard LEDs for steady, non-flashing illumination or with flashing LEDs for flashing illumination. Bases include terminal block for wiring, stacklight cover and gasket. See **Page V7-T2-38**.

Flashing Stacklight Base

Allows configuration of each light in the stack for either steady or 60 times per minute flashing illumination. Flashing circuit for use with incandescent lamps only. (Maximum allowable number of light modules is 2 at 12V, 4 at 24V and 6 at 48V and above.) See **Page V7-T2-38.**

For flashing LEDs use standard base with flashing LED light module.

Light Modules

Available in a variety of colors for both incandescent lamps and LED lamps. To maximize illumination and light dispersion, incandescent units include an opal white diffuser while LED diffusers are clear. See **Page V7-T2-36.**

Xenon Strobe

Sets are similar to standard lens/diffuser units, except each set consists of two lens units. The lower unit includes the electronics and is permanently fused to the upper unit which contains the Xenon lamp. Xenon units may be placed in any position in a complete stacklight unit. They will flash 60 times per minute when used with a standard or flashing base. See **Page V7-T2-36.**

Alarms

May be fitted to the top of a complete stacklight unit or directly to the stacklight bases, if desired. Available in three versions, each with adjustable sound levels. See **Page V7-T2-39.**

Complete Stacklight Modules

- Stacklights accept a maximum of six incandescent or LED light modules or two Xenon Flasher modules and can be mounted in any position on the stack.
- Alarm units are mounted in the top most position only.

Maximum Configurations

Incandescent or LED Modules	Xenon Modules	Alarm Modules	Max. Number of Modules
6	—	—	6
5	—	1	6
4	1	—	5
3	1	1	5
2	2	—	4
1	2	1	4

Catalog Number Selection

Stacklight Catalog Numbering System

E26X 9 KM L 39R W – V4

Mounting Base ①		
Code	**Description**	**Component Catalog No.**
W	None (base mount)	—
4	3/4 in NPT hub, chrome	E26S10**4**
8	Standard three-hole	E26S10**8**
9	Standard four-hole	E26S10**9**

Extension Tube ⑤		
Code	**Description**	**Component Catalog No.**
W	None (base mount)	—
Gray Aluminum		
HM	20 mm 3/4 in NPT	E26B**HM**
JM	160 mm 3/4 in NPT	E26B**JM**
KM	360 mm 3/4 in NPT	E26B**KM**
MM	760 mm 3/4 in NPT	E26B**MM**
Black Aluminum		
HU	20 mm 3/4 in NPT	E26B**HU**
JU	160 mm 3/4 in NPT	E26B**JU**
KU	360 mm 3/4 in NPT	E26B**KU**
MU	760 mm 3/4 in NPT	E26B**MU**
RU	Right angle 3/4 in NPT	E26B**RU**

Stacklight Base		
Code	**Description**	**Component Catalog No.** ②
L	Standard	E26B**L**
F	Flashing ⑥	E26B**F**_

Alarm		
Code	**Description**	**Component Catalog No.** ②
W	None	—
Q	Mono-tonal	E26B**Q**_
N	Bi-tonal	E26B**N**_
P	Intermittent	E26B**P**_

Voltage ③	
Code	**Description**
V1	12V
V2	24V
V3	48V
V4	120V
V5 ④	240V

Light Module		
Code	**Description**	**Component Catalog No.** ②
0	Clear incandescent	E26B**0**_
2	Red incandescent	E26B**2**_
3	Green incandescent	E26B**3**_
4	Yellow incandescent	E26B**4**_
6	Blue incandescent	E26B**6**_
9	Amber incandescent	E26B**9**_
W	White cluster LED with clear lens	E26B**W**_
R	Red cluster LED with red lens	E26B**R**_
G	Green cluster LED with green lens	E26B**G**_
Y	Yellow cluster LED with yellow lens	E26B**Y**_
B	Blue cluster LED with blue lens	E26B**B**_
A	Amber cluster LED with amber lens	E26B**A**_
W1	White cylindrical LED with clear lens ④	E26B**W1**_
R1	Red cylindrical LED with red lens ④	E26B**R1**_
G1	Green cylindrical LED with green lens ④	E26B**G1**_
Y1	Yellow cylindrical LED with yellow lens ④	E26B**Y1**_
B1	Blue cylindrical LED with blue lens ④	E26B**B1**_
A1	Amber cylindrical LED with amber lens ④	E26B**A1**_
M	Flashing white cluster LED with clear lens	E26B**M**_
E	Flashing red cluster LED with red lens	E26B**E**_
U	Flashing green cluster LED with green lens	E26B**U**_
V	Flashing yellow cluster LED with yellow lens	E26B**V**_
K	Flashing blue cluster LED with blue lens	E26B**K**_
Z	Flashing amber cluster LED with amber lens	E26B**Z**_
X0	Xenon flasher with clear lens	E26B**X0**_
X2	Xenon flasher with red lens	E26B**X2**_
X3	Xenon flasher with green lens	E26B**X3**_
X4	Xenon flasher with yellow lens	E26B**X4**_
X6	Xenon flasher with blue lens	E26B**X6**_
X9	Xenon flasher with amber lens	E26B**X9**_

Voltage Codes

Voltage Code	Incandescent Lamp	Cluster LED	Cylindrical LED	Xenon Flasher	Flasher Base/Alarm
(Blank)	No lamp supplied	No LED supplied	No LED supplied	—	—
V1	12 Vac/Vdc	12 Vac/Vdc	12 Vac/Vdc	12 Vac/Vdc	12 Vac/Vdc
V2	24 Vac/Vdc	24 Vac/Vdc	24 Vac/Vdc	24 Vac/Vdc	24 Vac/Vdc
V3	48 Vac/Vdc	48 Vac/Vdc	48 Vac/Vdc	48 Vac/Vdc	48 Vac/Vdc
V4	120 Vac/Vdc	120 Vac	120 Vac	120 Vac	120 Vac/Vdc
V5	240 Vac/Vdc	240 Vac	—	240 Vac	240 Vac/Vdc

Notes

① Unless base mount is specified, an extension tube must be selected for a complete unit.
② Component catalog numbers for flashing bases, alarm units and light modules are incomplete and require the addition of a suffix code to specify the required voltage rating. See table above.
③ If no voltage is specified, assembled stacklight will be supplied without lamps or LEDs.
④ 240V not available for cylindrical LEDs.
⑤ For complete length (extension tube and base), see **Page V7-T2-39**.
⑥ Flashing base is for use with incandescent lamps.

Product Selection

Assembled Units

One-, Two- and Three-Light Assembled Stacklights

- Base mountable
- Incandescent or LED versions
- 24V and 120V versions

One-Light Unit Stacklight

Volts AC/DC	Alarm	First Level Color	Illumination Type	Catalog Number
24V	None	Red	Incandescent—steady	**E26XWWL2W-V2**
24V	None	Red	Cylindrical LED—steady	**E26XWWLR1W-V2**
24V	None	Green	Incandescent—steady	**E26XWWL3W-V2**
24V	None	Green	Cylindrical LED—steady	**E26XWWLG1W-V2**
24V	None	Amber	Incandescent—steady	**E26XWWL9W-V2**
24V	None	Amber	Cylindrical LED—steady	**E26XWWLA1W-V2**
120V	None	Red	Incandescent—steady	**E26XWWL2W-V4**
120V ①	None	Red	Cylindrical LED—steady	**E26XWWLR1W-V4**
120V	None	Green	Incandescent—steady	**E26XWWL3W-V4**
120V ①	None	Green	Cylindrical LED—steady	**E26XWWLG1W-V4**
120V	None	Amber	Incandescent—steady	**E26XWWL9W-V4**
120V ①	None	Amber	Cylindrical LED—steady	**E26XWWLA1W-V4**

Two-Light Unit Stacklight

Volts AC/DC	Alarm	First Level Color	Illumination Type	Second Level Color	Illumination Type	Catalog Number
24V	None	Green	Incandescent—steady	Red	Incandescent—steady	**E26XWWL32W-V2**
24V	None	Green	Cylindrical LED—steady	Red	Cylindrical LED—steady	**E26XWWLG1R1W-V2**
120V	None	Green	Incandescent—steady	Red	Incandescent—steady	**E26XWWL32W-V4**
120V ①	None	Green	Cylindrical LED—steady	Red	Cylindrical LED—steady	**E26XWWLG1R1W-V4**

Three-Light Unit Stacklight

Volts AC/DC	Alarm	First Level Color	Illumination Type	Second Level Color	Illumination Type	Third Level Color	Illumination Type	Catalog Number
24V	None	Green	Incandescent—steady	Amber	Incandescent—steady	Red	Incandescent—steady	**E26XWWL392W-V2**
24V	None	Green	Cylindrical LED—steady	Amber	Cylindrical LED—steady	Red	Cylindrical LED—steady	**E26XWWLG1A1R1W-V2**
120V	None	Green	Incandescent—steady	Amber	Incandescent—steady	Red	Incandescent—steady	**E26XWWL392W-V4**
120V ①	None	Green	Cylindrical LED—steady	Amber	Cylindrical LED—steady	Red	Cylindrical LED—steady	**E26XWWLG1A1R1W-V4**

Note

① LED modules have very low current draw and should not be used with triac output devices like PLC triac output modules. It is recommended that dry contact outputs be used to switch 120 Vac modules.

Light and Xenon Strobe Modules

- Light modules include lens diffusers which provide even illumination and eliminate hot spots.
- Xenon strobes emit a bright attention-getting white flashing light. Flash rate = 60/min.
- Xenon strobe modules occupy two positions in the stacklight assembly.

Light/LED Module

Xenon Strobe Module

Light and Xenon Strobe Modules ①

LED/Lamp Voltage	Lens Color	Incandescent Steady or Flashing Catalog Number	Cylindrical LED Steady Only Catalog Number	Cluster LED Steady Catalog Number	Cluster LED Flashing Catalog Number	Xenon Flashing Catalog Number
Without bulb or LED	Red	**E26B2**	**E26B**	**E26BR**	**E26BR**	—
	Green	**E26B3**	**E26BG**	**E26BG**	**E26BG**	—
	Yellow	**E26B4**	**E26BY**	**E26BY**	**E26BY**	—
	Blue	**E26B6**	**E26BB**	**E26BB**	**E26BB**	—
	Amber	**E26B9**	**E26BA**	**E26BA**	**E26BA**	—
	Clear	**E26B0**	**E26BW**	**E26BW**	**E26BW**	—
12 Vac/Vdc	Red	**E26B2V1**	**E26BR1V1**	**E26BRV1**	**E26BEV1**	**E26BX2V1**
	Green	**E26B3V1**	**E26BG1V1**	**E26BGV1**	**E26BUV1**	**E26BX3V1**
	Yellow	**E26B4V1**	**E26BY1V1**	**E26BYV1**	**E26BVV1**	**E26BX4V1**
	Blue	**E26B6V1**	**E26BB1V1**	**E26BBV1**	**E26BKV1**	**E26BX6V1**
	Amber	**E26B9V1**	**E26BA1V1**	**E26BAV1**	**E26BZV1**	**E26BX9V1**
	Clear	**E26B0V1**	**E26BW1V1**	**E26BWV1**	**E26BMV1**	**E26BX0V1**
24 Vac/Vdc	Red	**E26B2V2**	**E26BR1V2**	**E26BRV2**	**E26BEV2**	**E26BX2V2**
	Green	**E26B3V2**	**E26BG1V2**	**E26BGV2**	**E26BUV2**	**E26BX3V2**
	Yellow	**E26B4V2**	**E26BY1V2**	**E26BYV2**	**E26BVV2**	**E26BX4V2**
	Blue	**E26B6V2**	**E26BB1V2**	**E26BBV2**	**E26BKV2**	**E26BX6V2**
	Amber	**E26B9V2**	**E26BA1V2**	**E26BAV2**	**E26BZV2**	**E26BX9V2**
	Clear	**E26B0V2**	**E26BW1V2**	**E26BWV2**	**E26BMV2**	**E26BX0V2**
48 Vac/Vdc	Red	**E26B2V3**	**E26BR1V3**	**E26BRV3**	**E26BEV3**	**E26BX2V3**
	Green	**E26B3V3**	**E26BG1V3**	**E26BGV3**	**E26BUV3**	**E26BX3V3**
	Yellow	**E26B4V3**	**E26BY1V3**	**E26BYV3**	**E26BVV3**	**E26BX4V3**
	Blue	**E26B6V3**	**E26BB1V3**	**E26BBV3**	**E26BKV3**	**E26BX6V3**
	Amber	**E26B9V3**	**E26BA1V3**	**E26BAV3**	**E26BZV3**	**E26BX9V3**
	Clear	**E26B0V3**	**E26BW1V3**	**E26BWV3**	**E26BMV3**	**E26BX0V3**
120 Vac ②	Red	**E26B2V4**	**E26BR1V4**	**E26BRV4**	**E26BEV4**	**E26BX2V4**
	Green	**E26B3V4**	**E26BG1V4**	**E26BGV4**	**E26BUV4**	**E26BX3V4**
	Yellow	**E26B4V4**	**E26BY1V4**	**E26BYV4**	**E26BVV4**	**E26BX4V4**
	Blue	**E26B6V4**	**E26BB1V4**	**E26BBV4**	**E26BKV4**	**E26BX6V4**
	Amber	**E26B9V4**	**E26BA1V4**	**E26BAV4**	**E26BZV4**	**E26BX9V4**
	Clear	**E26B0V4**	**E26BW1V4**	**E26BWV4**	**E26BMV4**	**E26BX0V4**
240 Vac ②	Red	**E26B2V5**	—	**E26BRV5**	**E26BEV5**	**E26BX2V5**
	Green	**E26B3V5**	—	**E26BGV5**	**E26BUV5**	**E26BX3V5**
	Yellow	**E26B4V5**	—	**E26BYV5**	**E26BVV5**	**E26BX4V5**
	Blue	**E26B6V5**	—	**E26BBV5**	**E26BKV5**	**E26BX6V5**
	Amber	**E26B9V5**	—	**E26BAV5**	**E26BZV5**	**E26BX9V5**
	Clear	**E26B0V5**	—	**E26BWV5**	**E26BMV5**	**E26BX0V5**

Notes

① Include lens, diffusers and lamps unless otherwise noted.
② Incandescent bulbs are AC/DC rated, LEDs are AC rated only.

LEDs—Cylindrical or Cluster

Cylindrical Stacklight LED

Cluster LED

Cylindrical or Cluster LEDs

Voltage	Color	Cylindrical LED Steady Only Catalog Number	Cluster LED Steady Catalog Number	Cluster LED Flashing Catalog Number
12 Vac/Vdc	Red	**E26S110**	**E26S15**	**E26S48**
	Green	**E26S114**	**E26S19**	**E26S53**
	Yellow	**E26S112**	**E26S23**	**E26S58**
	Blue	**E26S115**	**E26S27**	**E26S63**
	White	**E26S116**	**E26S71**	**E26S75**
	Amber	**E26S111**	**E26S79**	**E26S84**
24 Vac/Vdc	Red	**E26S117**	**E26S16**	**E26S49**
	Green	**E26S121**	**E26S20**	**E26S54**
	Yellow	**E26S119**	**E26S24**	**E26S59**
	Blue	**E26S122**	**E26S28**	**E26S64**
	White	**E26S123**	**E26S72**	**E26S76**
	Amber	**E26S118**	**E26S80**	**E26S85**
48 Vac/Vdc	Red	**E26S124**	**E26S17**	**E26S50**
	Green	**E26S128**	**E26S21**	**E26S55**
	Yellow	**E26S126**	**E26S25**	**E26S60**
	Blue	**E26S129**	**E26S29**	**E26S65**
	White	**E26S130**	**E26S73**	**E26S77**
	Amber	**E26S125**	**E26S81**	**E26S86**
120 Vac/Vdc	Red	**E26S138**	**E26S18**	**E26S51**
	Green	**E26S142**	**E26S22**	**E26S56**
	Yellow	**E26S140**	**E26S26**	**E26S61**
	Blue	**E26S143**	**E26S30**	**E26S66**
	White	—	**E26S74**	**E26S78**
	Amber	**E26S139**	**E26S82**	**E26S87**
240 Vac/Vdc	Red	—	**E26S44**	**E26S52**
	Green	—	**E26S45**	**E26S57**
	Yellow	—	**E26S46**	**E26S62**
	Blue	—	**E26S47**	**E26S67**
	White	—	**E26S101**	**E26S102**
	Amber	—	**E26S83**	**E26S88**

Mounting Bases Components

Standard Base

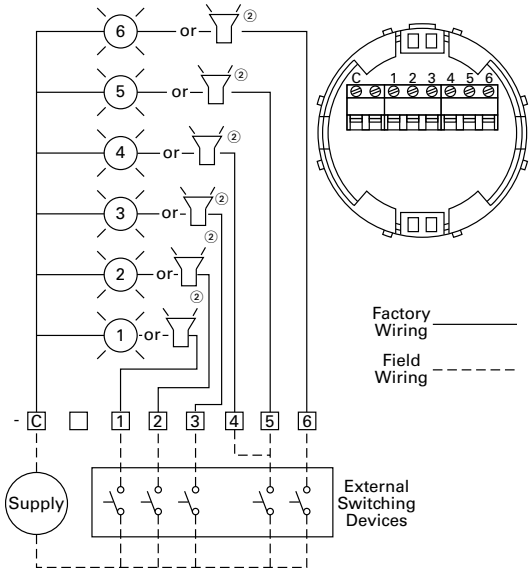

Flashing Base

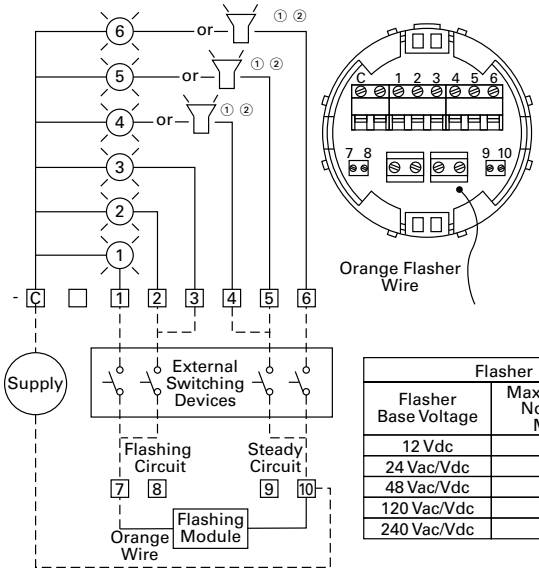

Flasher	
Flasher Base Voltage	Max. Allowable No. of Light Modules
12 Vdc	2
24 Vac/Vdc	4
48 Vac/Vdc	6
120 Vac/Vdc	6
240 Vac/Vdc	6

Description	Voltage	Catalog Number
Standard Base		
For use with steady incandescent or steady/flashing LED	12 Vac/Vdc to 240 Vac/Vdc	**E26BL**
Flashing Base		
Enables configuration of incandescent light modules for steady or flashing operation	12 Vdc	**E26BFV1**
	24 Vac/Vdc	**E26BFV2**
	48 Vac/Vdc	**E26BFV3**
	120 Vac/Vdc	**E26BFV4**
	240 Vac/Vdc	**E26BFV5**

Mounting Bases and Hubs

	Description	Voltage	Catalog Number
Standard Three-Hole Mounting Base	**Mounting Base**		
	Standard three-hole mounting base	—	**E26S108**
Standard Four-Hole Mounting Base	Standard four-hole mounting base	—	**E26S109**
Myers Type Hub	**Myers Type Hub**		
	3/4 in NPT threaded hub	—	**E26S104**

Notes

① Audible alarm units must be wired via the steady circuit on flashing base units.

② Audible alarm units can be wired in positions as shown but only one unit is permitted on each stack and unit must occupy the last or top mounting position.

Alarm Units and Extension Tubes Components

E26B_

Audible Alarm Units-NEMA Type 1 (IP20) ①

Description	Voltage	Catalog Number
Mono-Tonal		
4.5 mA	12 Vac/Vdc	**E26BQV1**
12.6 mA	24 Vac/Vdc	**E26BQV2**
9.4 mA	48 Vac/Vdc	**E26BQV3**
11.5 mA	120 Vac/Vdc	**E26BQV4**
5.1 mA	240 Vac/Vdc	**E26BQV5**
Bi-Tonal		
4.5 mA	12 Vac/Vdc	**E26BNV1**
12.6 mA	24 Vac/Vdc	**E26BNV2**
9.4 mA	48 Vac/Vdc	**E26BNV3**
11.5 mA	120 Vac/Vdc	**E26BNV4**
5.1 mA	240 Vac/Vdc	**E26BNV5**
Intermittent		
4.5 mA	12 Vac/Vdc	**E26BPV1**
12.6 mA	24 Vac/Vdc	**E26BPV2**
9.4 mA	48 Vac/Vdc	**E26BPV3**
11.5 mA	120 Vac/Vdc	**E26BPV4**
5.1 mA	240 Vac/Vdc	**E26BPV5**

Extension Tubes

	Description	Voltage	Catalog Number
Extension Tube 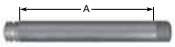	**Extension "A"** ②		
	0.79 in (20 mm) extension	—	**E26BHM**
	6.30 in (160 mm) extension	—	**E26BJM**
	14.17 in (360 mm) extension	—	**E26BKM**
	29.92 in (760 mm) extension	—	**E26BMM**
Extension Tube 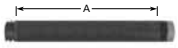	**Extension "A"** ③		
	0.79 in (20 mm) extension	—	**E26BHU**
	6.30 in (160 mm) extension	—	**E26BJU**
	14.17 in (360 mm) extension	—	**E26BKU**
	29.92 in (760 mm) extension	—	**E26BMU**
E26BRU	Right angle extension tube	—	**E26BRU**

Notes

① Volume adjustment range: 64 dB to 90 dB typical current draw (mA).
② For use with standard mounting base or 3/4 in NPT threaded hub—gray aluminum.
③ For use with standard mounting base or 3/4 in NPT threaded hub—black aluminum.

Replacement Parts

Stacklight Replacement Parts

Description	Notes	Number in Diagram	Catalog Number
Replacement cover	Normally included with stacklight base	1	E26S68
Replacement lens O-ring	Normally included with light modules	2	E26S106 ①
Replacement lenses	Clear	3	E26S38
	Red		E26S39
	Green		E26S40
	Yellow		E26S41
	Blue		E26S42
	Amber		E26S43
Replacement Xenon strobe dual high (does not include lenses)	12 Vac/Vdc	4	E26S33
	24 Vac/Vdc		E26S34
	48 Vac/Vdc		E26S35
	120 Vac		E26S36
	240 Vac		E26S37
Replacement diffusers	White — normally supplied with incandescent light modules	4	E26S31
	Clear — normally supplied with LED light modules		E26S32
Replacement lamps ②	12V	5	E26S8
	24V		E26S9
	48V		E26S10
	120V		E26S11
	240V		E26S12
Replacement extension tube O-rings	Normally included with extension tubes	6	E26S107 ③
Replacement mounting gasket ④	Normally included with stacklight base	7	E26S105
Lamp removal tool	For E26 and E22 incandescent lamps		E22BA3

Typical Stacklight Assemblies

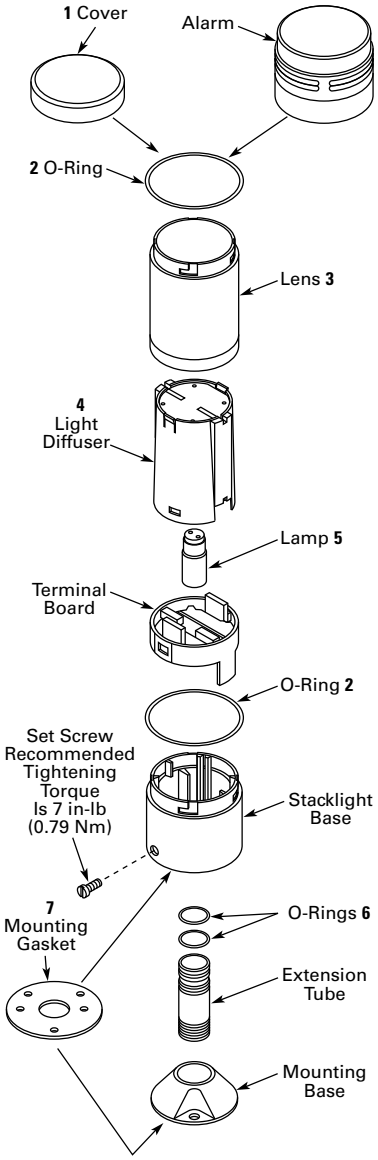

Typical Stacklight Assembly (Exploded View)

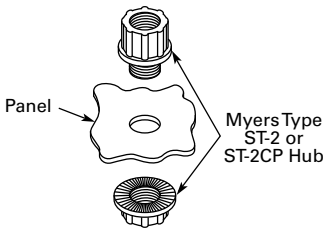

Alternate Conduit Hub

Notes

① Sold in packages of 5 pieces.
② For replacement LEDs, see table on **Page V7-T2-37**.
③ Sold in packages of 10 pieces.
④ Mounting gaskets have two sets of mounting holes—one set with center-to-center spacing of 1.75 in (44.5 mm) and another set with center-to-center spacing of 1.65 in (42 mm).

Technical Data and Specifications

General Specifications

Description	Specification
Mechanical Ratings	
Shock (IEC 68-2-27)	11 ms, 15g
Vibration (IEC 68-2-6)	10 sweeps 10–150 Hz, 2g
Bump (IEC 68-2-29)	1000 pulses, 6 ms, 15g
Climate Conditions	
Operating	Maximum 104°F (40°C) at 95% RH, Temperature –4° to 140°F (–20° to 60°C)
Storage	Temperature –40° to 176°F (–40° to 80°C)
Materials	
Cover	Polycarbonate
Lenses	Polycarbonate
Stacklight base	Nylon
Extension tubes	Aluminum
Mounting base	Zinc die cast
Terminals	
Single conductor	14–30 AWG (2.5–0.05 mm^2)
Two conductors (same size))	18–26 AWG (0.75–0.14 mm^2) Do not mix solid and stranded wire in the same terminal
Recommended tightening torque	4.4–5.3 lb-in (0.5–0.6 Nm)
Electrical Ratings	
Insulation voltage (U_i)	690V
Operational voltage (U_e)	250V
Impulse withstand voltage (U_{imp})	1.5 kV
Bulb Specifications	
Incandescent lamp type	BA15d
Maximum lamp wattage	6W
Bulbs—average life	
Incandescent	7,000 to 12,000 hrs. (based on voltage)
Xenon flasher	20,000 hrs.
LED	60,000 to 100,000 hrs. (based on colors)
LED/Incandescent Comparison	
Incandescent lamps	Average operating life of 7,000 hours Each lamp can be used with any color lens Low cost results in short term savings
LED lamps	Average operating life of 60,000 to 100,000 hours Low power consumption Extended life results in long-term savings

Ratings

Published theoretical lamp lives are based on ideal laboratory conditions and should be used for comparison only.
Actual life may be shorter due to various application conditions.

Stacklight Incandescent Application Data

Type of Light	Lamp Used	Approximate Current, mA per Light	Theoretical Lamp Life, Hours as Applied
12V	BA15d	417	7,000
24V	BA15d	208	7,000
48V	BA15d	104	7,000
110–140V	BA15d	36–50	7,000
220–260V	BA15d	23–27	12,000

Xenon Flasher Application Data

Type of Light	Lamp Used	Approximate Current, mA per Light	Theoretical Lamp Life, Hours as Applied
12V	DC	460 mA	20,000
	AC	780 mA	20,000
24V	DC	190 mA	20,000
	AC	320 mA	20,000
48V	DC	100 mA	20,000
	AC	150 mA	20,000
120V	AC	60 mA ①	20,000
240V	AC	30 mA ①	20,000

LED Application Data

Type of Light	Color	Cluster LED Approximate Current, mA at Rated Volts	Cylindrical LED Approximate Current, mA at Rated Volts	Theoretical Lamp Life, Hours as Applied
Continuous/Flashing Stacklight LED				
12 Vac/Vdc	Red	92	92	100,000
	Amber	92	92	100,000
	Yellow	92	92	100,000
	Green	60	60	80,000
	Blue	60	60	60,000
	White	60	60	60,000
24 Vac/Vdc	Red	47	47	100,000
	Amber	47	47	100,000
	Yellow	47	47	100,000
	Green	59	59	80,000
	Blue	59	59	60,000
	White	59	59	60,000
48 Vac/Vdc	Red	25	25	100,000
	Amber	25	25	100,000
	Yellow	25	25	100,000
	Green	18	18	80,000
	Blue	31	31	60,000
	White	31	31	60,000
60 Vac/Vdc	Red	25	25	100,000
	Amber	25	25	100,000
	Yellow	25	25	100,000
	Green	18	18	80,000
	Blue	17	17	60,000
	White	17	17	60,000
120 Vac/Vdc	Red	24	24	100,000
	Amber	24	24	100,000
	Yellow	24	24	100,000
	Green	17	17	80,000
	Blue	16	16	60,000
	White	16	16	60,000

Note

① Represents average current draw, 1.6A peak for 120V and 0.8A peak at 240V.

Mounting Instructions

Stacklight bases may be mounted without the use of an extension tube or mounting base. If additional height is required, choose 0.8–30 in (20–760 mm) extension tubes that fit between the mounting base and stacklight base. The extension tubes are threaded with 3/4 in NPT threads, allowing for direct connection to conduit fittings or threaded holes without the use of a mounting base.

Base Mounting

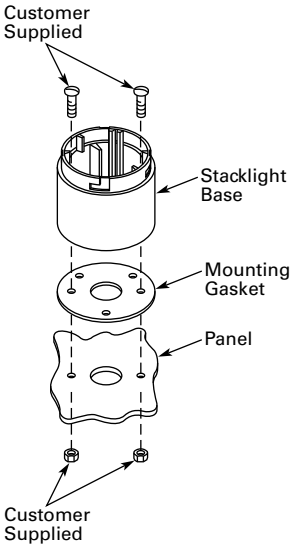

Utilizing Extension Tube and Mounting Base

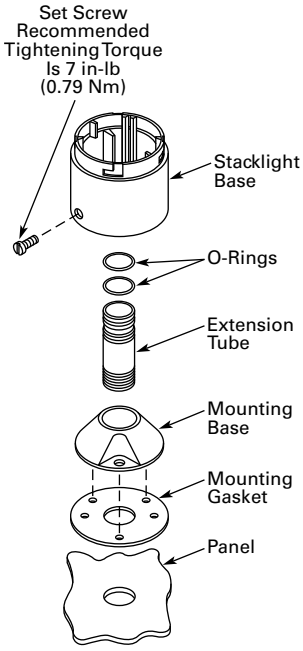

Utilizing Extension Tube and 3/4 In (19.1 mm) Conduit Hub

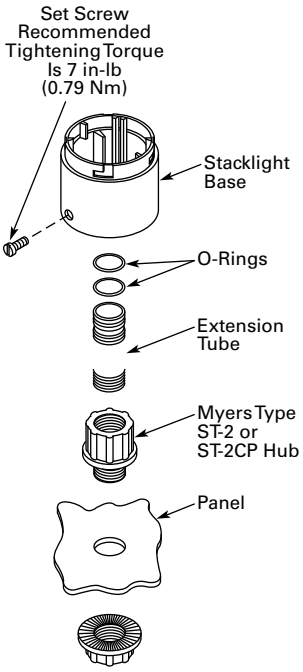

(Use Rubber-Jawed Pliers for Installation to Avoid Scratching the Black Anodized Coating)

Mounting Dimensions

Approximate Dimensions in Inches (mm)

Base Mounting

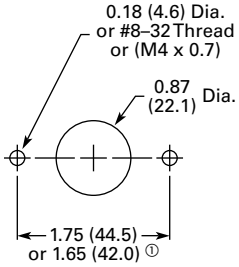

Three-Hole Mounting for E26S108

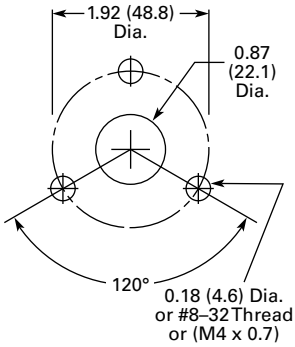

Four-Hole Mounting for E26S109

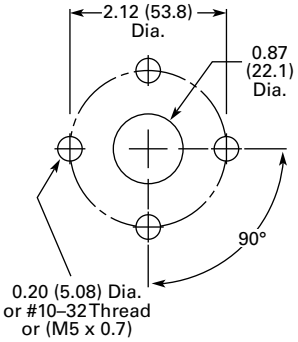

Conduit Hub for E26S104—3/4 In (19.1 mm)

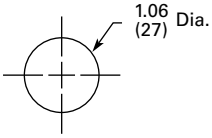

Note

① Stacklight base and gasket are supplied as standard with two sets of base mount holes.
One set with center-to-center spacing of 1.75 in (44.5 mm) and another set with center-to-center spacing of 1.65 in (42 mm).

Dimensions

Approximate Dimensions in Inches (mm)

Standard and Flashing Bases ①

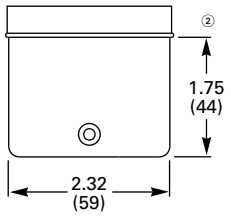

Alarm Units

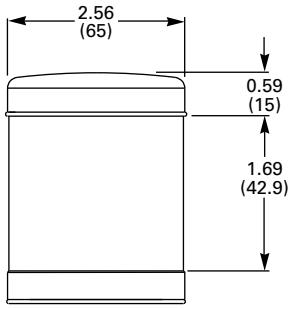

Assembled Extension Tubes

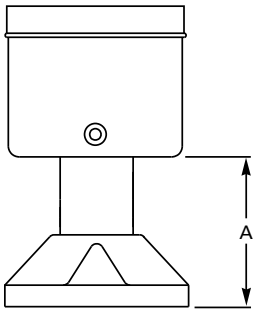

Tube Extension	Height A
0.79 (20)	1.77 (45)
6.30 (160)	7.28 (185)
14.17 (360)	15.16 (385)
29.92 (760)	30.91 (785)

Right Angle Extension Tubes

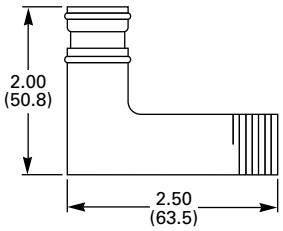

Notes

① Bases also suitable for mounting with extension tubes listed on **Page V7-T2-39**.

② Mounting gasket and cover are supplied as standard with stacklight bases.

Approximate Dimensions in Inches (mm)

One-Light Unit Stacklight

Standard

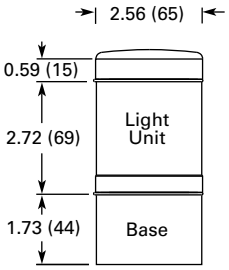

With Alarm

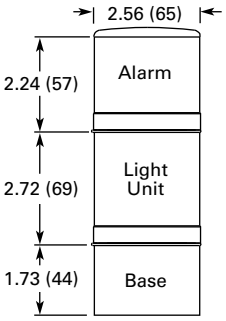

With Xenon Flasher

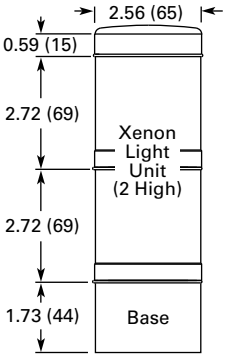

Two-Light Unit Stacklight

Standard

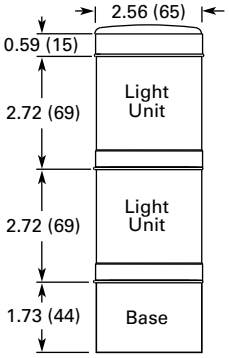

With Alarm

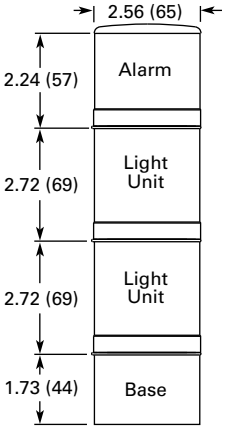

With Xenon Flasher

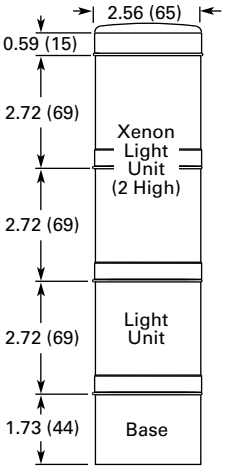

Approximate Dimensions in Inches (mm)

Three-Light Unit Stacklight

Standard

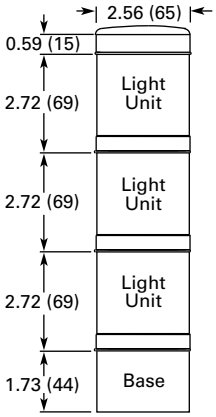

With Alarm

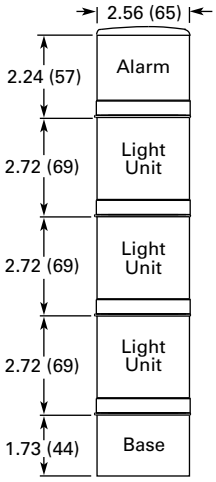

With Xenon Flasher

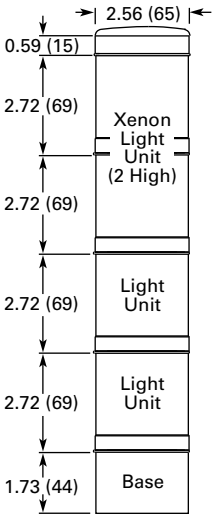

Light Modules

Standard

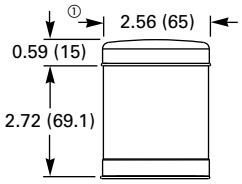

Xenon

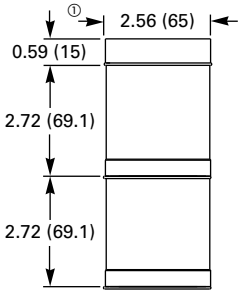

Note

① Cover included with stacklight base.

easyRelay Programmable Relays

D1 Series General Purpose Relay

D96 Series Solid-State Relay

Universal TR Series Timing Relay

Safety Relay

3.1 Relay Products

Control Relays and Timers Comparison **V7-T3-2**

3.2 *XR* Series Terminal Block Relays

Standard, OptoCoupler and High Current

Catalog Number Selection **V7-T3-3**

3.3 Programmable Relays

easy500, easy700, easy800, easy802/806 Relays and MFD-Titan Multi-Function Displays

Product Overview **V7-T3-19**

3.4 General Purpose Plug-In Relays

General Purpose Relays—D1, D2, D3, D4, D5, D7, D8 and D9 Series

Product Selection Guide **V7-T3-49**

3.5 General Purpose Open Style Relays

9575H Series 3000 Relay

9575H Series 3000—Type AA, AC and DC. **V7-T3-118**

3.6 Solid-State Relays

D93, D96 and D99 Series

Product Overview **V7-T3-122**

3.7 Machine Tool Relays

D15, BF/BFD, AR/ARD and D26 Series

Product Overview **V7-T3-141**

3.8 Timing Relays

Universal TR, TR and TMR Series

Product Selection Guide **V7-T3-167**

3.9 Alternating Relays

D85 Series

Product Description **V7-T3-188**

3.10 Safety Relays

ESR5 Series

Product Description **V7-T3-193**

3.11 easySafety

ES4P Series

Product Description **V7-T3-199**

Relay Products

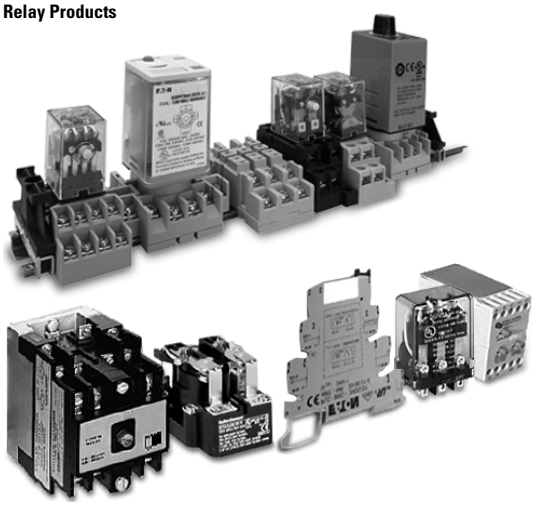

Contents

Description	*Page*
Terminal Block Relays	**V7-T3-3**
Programmable Relays	**V7-T3-19**
General Purpose Plug-In Relays	**V7-T3-49**
General Purpose Type AA Relays	**V7-T3-118**
Solid-State Relays	**V7-T3-122**
Machine Tool Relays	**V7-T3-141**
Timing Relays	**V7-T3-167**
Alternating Relays	**V7-T3-188**
Safety Relays	**V7-T3-193**

Control Relays and Timers Comparison

Selection Guide by Catalog Number Prefix

Relays	Type	Mounting	Contacts	Maximum Amperage (AC)		UL	CSA	CE	Page Number
9575H3	General purpose	Panel mount	Fixed	40 A	—	■	■	■	**V7-T3-119**
AR/ARD	Machine tool	Panel mount	Convertible	10 A	—	■	■	—	**V7-T3-154**
BF/BFD	Machine tool	Panel mount	Fixed	10 A	■	—	■	—	**V7-T3-148**
D2RF	Full featured plug-in	DIN rail / panel mount	Fixed	10 A	■	—	■	■	**V7-T3-59**
D2RR	Standard plug-in	DIN rail / panel mount / flange	Fixed	10 A	■	—	■	■	**V7-T3-59**
D3RF	Full featured plug-in	DIN rail / panel mount	Fixed	16 A	■	—	■	■	**V7-T3-69**
D3RR	Standard plug-in	DIN rail / panel mount	Fixed	16 A	■	—	■	■	**V7-T3-69**
D4PR	Standard plug-in	DIN rail / panel mount	Fixed	10 A	■	—	■	■	**V7-T3-77**
D5RF	Full featured plug-in	DIN rail / panel mount	Fixed	16 A	■	—	■	■	**V7-T3-82**
D5RR	Standard plug-in	DIN rail / panel mount / PC board	Fixed	16 A	■	—	■	■	**V7-T3-82**
D7PF	Full featured plug-in	DIN rail / panel mount	Fixed	20 A	■	—	■	■	**V7-T3-91**
D7PR	Standard plug-in	DIN rail / panel mount / flange	Fixed	20 A	■	—	■	■	**V7-T3-91**
D8PR	Standard plug-in	DIN rail / panel mount / flange	Fixed	30 A	■	—	■	■	**V7-T3-104**
D9PR	Standard plug-in	Panel mounting	Fixed	25 A	■	—	■	—	**V7-T3-109**
D15	Machine tool	DIN rail / panel mount	Fixed	10 A	—	■	■	■	**V7-T3-143**
D26	Machine tool	Panel or channel mount	Convertible	10 A	—	■	■	—	**V7-T3-159**
D85	Alternating relays	DIN rail / panel mount	Fixed	10 A	■	■	—	■	**V7-T3-189**
D1RF	Full featured plug-in	DIN rail / panel mount	Fixed	20 A	■	—	■	■	**V7-T3-54**
D1RR	Standard plug-in	DIN rail / panel mount	Fixed	20 A	■	—	■	■	**V7-T3-54**
easyRelay	Programmable relay	DIN rail	Fixed	8 A	—	■	■	■	**V7-T3-23**
TMR5	Timing relay (non-programmable)	DIN rail / panel mount	Fixed	10 A	■	■	—	■	**V7-T3-180**
TMR6	Timing relay (non-programmable)	DIN rail / panel mount	Fixed	10 A	■	■	—	■	**V7-T3-184**
TR	Timing relay (programmable)	DIN rail / panel mount	Fixed	10 A	—	■	■	—	**V7-T3-177**
Universal TR	Timing relay (programmable)	DIN rail	Fixed	8 A	—	■	■	■	**V7-T3-173**
XR	Terminal block relay	DIN rail	Fixed	6 A, 10 A	■	—	—	■	**V7-T3-5**

Terminal Block Relays

Contents

Description	*Page*
Terminal Block Relays	
Standard Terminal Block Relays	**V7-T3-4**
OptoCoupler Terminal Block Relays	**V7-T3-12**
High Current Terminal Block Relays	**V7-T3-15**
XR Series Accessories	**V7-T3-18**

Catalog Number Selection

XR Series—Overview

XR U 1 D 12 G

Description
XR = ***XR*** terminal block relay

Connection Type
U = Screw
P = Spring
R = Replacement relay

Poles
1 = 1PDT
2 = 2PDT

Type
D = Standard relay
S = Octocoupler (solid-state)
H = High current

Voltage
12 = 12 Vdc
24 = 24 Vdc
24U = 24 Vac/Vdc
120U = 120 Vac/110 Vdc
230U = 230 Vac/220 Vdc

Gold-Flashed Contacts
Blank = No
G = Yes

Standard Terminal Block Relay

Contents

Description	*Page*
Standard Terminal Block Relays	
Product Selection	**V7-T3-5**
Technical Data and Specifications	**V7-T3-6**
Electrical Schematics	**V7-T3-11**
Dimensions	**V7-T3-11**
OptoCoupler Terminal Block Relays	**V7-T3-12**
High Current Terminal Block Relays	**V7-T3-15**
XR Series Accessories	**V7-T3-18**

Standard Terminal Block Relays

Product Description

The ***XR*** Series Terminal Block Relays are ideal for applications that require a high switching capacity and long electrical service life. The relays are plug-in interfaces that connect to basic terminal blocks. The ***XR*** Series uses screw or spring-cage technology, as well as offers quick system wiring, superior safety features, clear labeling and a high level of modularity.

Application Description

Used in automation systems, electromechanical relays guarantee a safe connection between process I/O and electronic controls. The following functions are covered by relay coupling elements:

- Electrical isolation between the input and output circuits
- Independence of the type of switching current (AC and DC)
- High short-term overload resistance in the event of short circuits or voltage peaks
- Low switching losses
- Ease of operation

Features

- Pluggable relay allows for field replacement
- Functional plug-in bridges
- Choice of screw connections or spring-cage connection
- LED status indication
- DIN rail mount
- Only 6.2 mm wide for single-pole versions, 14 mm wide for double-pole
- All common input voltages between 12 Vdc to 120 Vac
- Gold-plated contacts available
- Equipped with a robust, miniature relay:
  - IP67 protection
  - Environmentally friendly, cadmium-free contact material
  - Easy, cost-effective installation and replacement using the engagement lever

Standards and Certifications

- cULus listed
- CE

c UL us Listed CE

Product Selection

XRU1D 24U

Standard Terminal Block Relays

Gold-Plated Contacts	Rated Current	Supply Voltage	Standard Pack	Catalog Number
1PDT Screw Connection				
No	6 A	12 Vdc	10	**XRU1D12**
No	6 A	120 Vac/110 Vdc	10	**XRU1D120U**
Yes	6 A	120 Vac/110 Vdc	10	**XRU1D120UG**
No	6 A	24 Vdc	10	**XRU1D24**
No	6 A	24 Vac/Vdc	10	**XRU1D24U**
Yes	6 A	24 Vac/Vdc	10	**XRU1D24UG**
No	6 A	230 Vac/220 Vdc	10	**XRU1D230U**
1PDT Spring Cage Connection				
No	6 A	12 Vdc	10	**XRP1D12**
No	6 A	120 Vac/110 Vdc	10	**XRP1D120U**
No	6 A	24 Vdc	10	**XRP1D24**
No	6 A	24 Vac/Vdc	10	**XRP1D24U**
No	6 A	230 Vac/220 Vdc	10	**XRP1D230U**
DPDT Screw Connection				
No	6 A	12 Vdc	10	**XRU2D12**
No	6 A	120 Vac/110 Vdc	10	**XRU2D120U**
No	6 A	24 Vdc	10	**XRU2D24**
No	6 A	24 Vac/Vdc	10	**XRU2D24U**
No	6 A	230 Vac/220 Vdc	10	**XRU2D230U**

Standard Replacement Relays

Gold-Plated Contacts	Rated Current	Supply Voltage ①	Standard Pack	Catalog Number
1PDT				
No	6 A	12 Vdc	10	**XRR1D12**
No	6 A	120 Vac/110 Vdc	10	**XRR1D120U**
Yes	6 A	120 Vac/110 Vdc	10	**XRR1D120UG**
No	6 A	24 Vdc	10	**XRR1D24**
Yes	6 A	24 Vdc	10	**XRR1D24G**
DPDT				
No	6 A	12 Vdc	10	**XRR2D12**
No	6 A	120 Vac/110 Vdc	10	**XRR2D120U**
No	6 A	24 Vdc	10	**XRR2D24**
No	6 A	230 Vac/220 Vdc	10	**XRR2D230U**

Note

① Voltage is the rating at the base. It may not match the voltage on the specific replacement relay.

Technical Data and Specifications

Standard 1PDT Screw Connection Terminal Block Relays

Catalog Number Replacement Relay	XRU1D12 XRR1D12	XRU1D24 XRR1D24	XRU1D24U XRR1D24	XRU1D120U XRR1D120U
Input voltage	12 Vdc	24 Vdc	24 Vac/Vdc	120 Vac/110 Vdc
Connection Data				
Rigid solid AWG (mm^2)	26–14 (0.14–2.5)	26–14 (0.14–2.5)	26–14 (0.14–2.5)	26–14 (0.14–2.5)
Flexible stranded AWG (mm^2)	26–14 (0.14–2.5)	26–14 (0.14–2.5)	26–14 (0.14–2.5)	26–14 (0.14–2.5)
Input Data for 1PDT Screw Connection Versions				
Input voltage	12 Vdc	24 Vdc	24 Vac/Vdc	120 Vac/110 Vdc
Permissible range	See **Page V7-T3-10**	See **Page V7-T3-10**	See **Page V7-T3-10**	See **Page V7-T3-10**
Typical input current	15.3 mA	9 mA	11 mA (24 Vac)/8.5 mA (24 Vdc)	3.5 mA (120 Vac)/3 mA (110 Vdc)
Typical response time	5 ms	5 ms	6 ms	6 ms
Typical release time	8 ms	8 ms	15 ms	15 ms
Input protection	Polarity protection diode, free-wheeling diode	Polarity protection diode, free-wheeling diode	Bridge rectifier	Bridge rectifier
Output Data				
Contact type	1PDT	1PDT	1PDT	1PDT
Contact material	AgSnO	AgSnO	AgSnO	AgSnO
Max. switching voltage	250 Vac/Vdc ①	250 Vac/Vdc ①	250 Vac/Vdc ①	250 Vac/Vdc ①
Min. switching voltage	12 Vac/Vdc	12 Vac/Vdc	12 Vac/Vdc	12 Vac/Vdc
Limiting continuous current	6 A	6 A	6 A	6 A
Min. switching current	10 mA	10 mA	10 mA	10 mA
Min. switching power	120 mW	120 mW	120 mW	120 mW
Miscellaneous Data				
Ambient temp range	–4 °F to +140 °F (–20 °C to +60 °C)	–4 °F to +140 °F (–20 °C to +60 °C)	–4 °F to +140 °F (–20 °C to +60 °C)	–4 °F to +140 °F (–20 °C to +60 °C)
Rated operating mode	100% operating factor	100% operating factor	100% operating factor	100% operating factor
Inflammability class	V0, in accordance with UL 94	V0, in accordance with UL 94	V0, in accordance with UL 94	V0, in accordance with UL 94
Mechanical service life	2×10^7 cycles	2×10^7 cycles	2×10^7 cycles	2×10^7 cycles

Note

① The separating plate, XRAPLCESK, should be installed for voltages greater than 250 V (L1, L2, L3) between identical terminal points of adjacent modules. Potential bridging is then possible with the XRAFBST bridge system.

Standard 1PDT Screw Connection Terminal Block Relays with Gold Contacts

Catalog Number Replacement Relay	XRU1D24UG XRR1D24G	XRU1D120UG XRR1D120UG
Input voltage	24 Vac/Vdc	120 Vac/110 Vdc
Connection Data		
Rigid solid AWG (mm^2)	26–14 (0.14–2.5)	26–14 (0.14–2.5)
Flexible stranded AWG (mm^2)	26–14 (0.14–2.5)	26–14 (0.14–2.5)
Input Data for 1PDT Screw Connection Versions with Gold Contacts		
Input voltage	24 Vac/Vdc	120 Vac/110 Vdc
Permissible range	See **Page V7-T3-10**	See **Page V7-T3-10**
Typical input current	11 mA (24 Vac)/8.5 mA (24 Vdc)	3.5 mA (120 Vac)/3 mA (110 Vdc)
Typical response time	6 ms	6 ms
Typical release time	15 ms	15 ms
Input protection	Bridge rectifier	Bridge rectifier
Output Data		
Contact type	1PDT	1PDT
Contact material	AgSnO, gold plated ①	AgSnO, gold plated ①
Max. switching voltage	30 Vac/36 Vdc (250 Vac/Vdc) ②	30 Vac/36 Vdc (250 Vac/Vdc) ②
Min. switching voltage	100 mV (12 Vac/Vdc) ②	100 mV (12 Vac/Vdc) ②
Limiting continuous current	50 mA (6 A) ②	50 mA (6 A) ②
Min. switching current	1 mA (10 mA) ②	1 mA (10 mA) ②
Min. switching power	100 mW (120 mW) ②	100 mW (120 mW) ②
Miscellaneous Data		
Ambient temp range	–4 °F to +140 °F (–20 °C to +60 °C)	–40 °F to +131 °F (–20 °C to +55 °C)
Rated operating mode	100% operating factor	100% operating factor
Inflammability class	V0, in accordance with UL 94	V0, in accordance with UL 94
Mechanical service life	2×10^7 cycles	2×10^7 cycles

Notes

① The separating plate, XRAPLCESK, should be installed for voltages greater than 250 V (L1, L2, L3) between identical terminal points of adjacent modules. Potential bridging is then possible with the XRAFBST bridge system.

② If the maximum values are exceeded, the gold layer is destroyed and the values in parentheses apply.

Standard 1PDT Spring Cage Terminal Block Relays

Catalog Number Replacement Relay	XRP1D12 XRR1D12	XRP1D24 XRR1D24	XRP1D24U XRR1D24	XRP1D120U XRR1D120U
Input voltage	12 Vdc	24 Vdc	24 Vac/Vdc	120 Vac/110 Vdc
Connection Data				
Rigid solid AWG (mm^2)	26–14 (0.14–2.5)	26–14 (0.14–2.5)	26–14 (0.14–2.5)	26–14 (0.14–2.5)
Flexible stranded AWG (mm^2)	26–14 (0.14–2.5)	26–14 (0.14–2.5)	26–14 (0.14–2.5)	26–14 (0.14–2.5)
Input Data for 1PDT Spring Cage Versions				
Input voltage	12 Vdc	24 Vdc	24 Vac/Vdc	120 Vac/110 Vdc
Permissible range	See **Page V7-T3-10**	See **Page V7-T3-10**	See **Page V7-T3-10**	See **Page V7-T3-10**
Typical input current	15.3 mA	9 mA	11 mA (24 Vac)/8.5 mA (24 Vdc)	3.5 mA (120 Vac)/3 mA (110 Vdc)
Typical response time	5 ms	5 ms	6 ms	6 ms
Typical release time	8 ms	8 ms	15 ms	15 ms
Input protection	Polarity protection diode, free-wheeling diode	Polarity protection diode, free-wheeling diode	Bridge rectifier	Bridge rectifier
Output Data				
Contact type	1PDT	1PDT	1PDT	1PDT
Contact material	AgSnO	AgSnO	AgSnO	AgSnO
Max. switching voltage	250 Vac/Vdc ①	250 Vac/Vdc ①	250 Vac/Vdc ①	250 Vac/Vdc ①
Min. switching voltage	12 Vac/Vdc	12 Vac/Vdc	12 Vac/Vdc	12 Vac/Vdc
Limiting continuous current	6 A	6 A	6 A	6 A
Min. switching current	10 mA	10 mA	10 mA	10 mA
Min. switching power	120 mW	120 mW	120 mW	120 mW
Miscellaneous Data				
Ambient temp range	–4 °F to +140 °F (–20 °C to +60 °C)	–4 °F to +140 °F (–20 °C to +60 °C)	–4 °F to +140 °F (–20 °C to +60 °C)	–4 °F to +131 °F (–20 °C to +55 °C)
Rated operating mode	100% operating factor	100% operating factor	100% operating factor	100% operating factor
Inflammability class	V0, in accordance with UL 94	V0, in accordance with UL 94	V0, in accordance with UL 94	V0, in accordance with UL 94
Mechanical service life	2×10^7 cycles	2×10^7 cycles	2×10^7 cycles	2×10^7 cycles

Note

① The separating plate, XRAPLCESK, should be installed for voltages greater than 250 V (L1, L2, L3) between identical terminal points of adjacent modules. Potential bridging is then possible with the XRAFBST bridge system.

Standard DPDT Screw Connection Terminal Block Relays

Catalog Number Replacement Relay	XRU2D12 XRR2D12	XRU2D24 XRR2D24	XRU2D24U XRR2D24	XRU2D120U XRR2D120U
Input voltage	12 Vdc	24 Vdc	24 Vac/Vdc	120 Vac/110 Vdc
Connection Data				
Rigid solid AWG (mm^2)	26–14 (0.14–2.5)	26–14 (0.14–2.5)	26–14 (0.14–2.5)	26–14 (0.14–2.5)
Flexible stranded AWG (mm^2)	26–14 (0.14–2.5)	26–14 (0.14–2.5)	26–14 (0.14–2.5)	26–14 (0.14–2.5)
Input Data for 1PDT Spring Cage Versions				
Input voltage	12 Vdc	24 Vdc	24 Vac/Vdc	120 Vac/110 Vdc
Permissible range	See **Page V7-T3-10**	See **Page V7-T3-10**	See **Page V7-T3-10**	See **Page V7-T3-10**
Typical input current	33 mA	18 mA	17.5 mA	4.5 mA (120 Vac)/4.2 mA (110 Vdc)
Typical response time	8 ms	8 ms	8 ms	7 ms
Typical release time	10 ms	10 ms	10 ms	10 ms
Input protection	Polarity protection diode, free-wheeling diode	Polarity protection diode, free-wheeling diode	Bridge rectifier	Bridge rectifier
Output Data				
Contact type	2PDT	Single contact, 2PDT	Single contact, 2PDT	Single contact, 2PDT
Contact material	AgNi	AgNi	AgNi	AgNi
Max. switching voltage	250 Vac/Vdc ①	250 Vac/Vdc ①	250 Vac/Vdc ①	250 Vac/Vdc ①
Min. switching voltage	5 V	5 V	5 V	5 V
Limiting continuous current	6 A	6 A	6 A	6 A
Max. inrush current	15 A (300 ms)	15 A (300 ms)	15 A (300 ms)	15 A (300 ms)
Min. switching current	10 mA	10 mA	10 mA	10 mA
Min. switching power	50 mW	50 mW	50 mW	50 mW
General Data				
Ambient temp range	–4 °F to +140 °F (–20 °C to +60 °C)	–4 °F to +140 °F (–20 °C to +60 °C)	–4 °F to +140 °F (–20 °C to +60 °C)	–4 °F to +140 °F (–20 °C to +60 °C)
Rated operating mode	100% operating factor	100% operating factor	100% operating factor	100% operating factor
Inflammability class	V0, in accordance with UL 94	V0, in accordance with UL 94	V0, in accordance with UL 94	V0, in accordance with UL 94
Mechanical service life	3×10^7 cycles	3×10^7 cycles	3×10^7 cycles	3×10^7 cycles

Note

① The separating plate, XRAPLCESK, should be installed for voltages greater than 250 V (L1, L2, L3) between identical terminal points of adjacent modules. Potential bridging is then possible with the XRAFBST bridge system.

Permissible Range Diagrams

1PDT Relay Modules

Operating Range Voltage for 12 Vdc

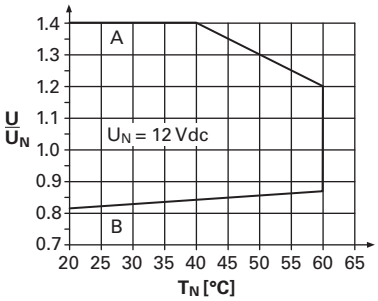

Operating Range Voltage for 120 Vac/110 Vdc

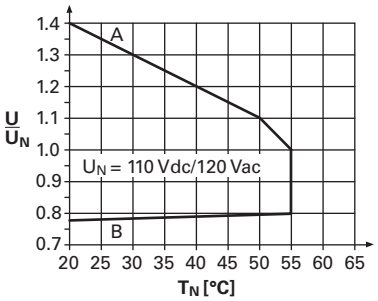

Operating Range Voltage for 24 Vdc

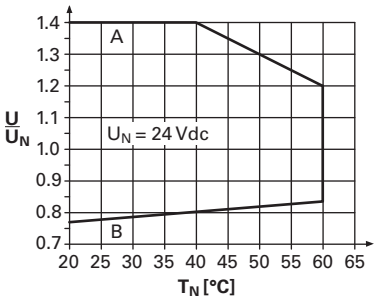

Operating Range Voltage for 24 Vac/Vdc

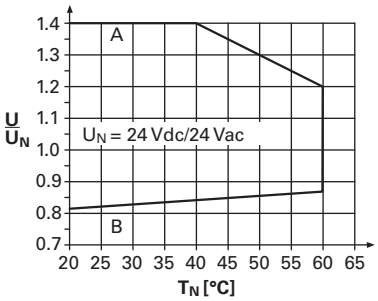

DPDT Relay Modules

Operating Range Voltage for 12 Vdc

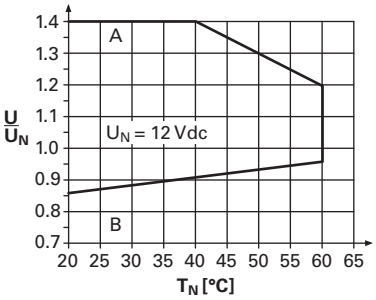

Operating Range Voltage for 120 Vac/110 Vdc

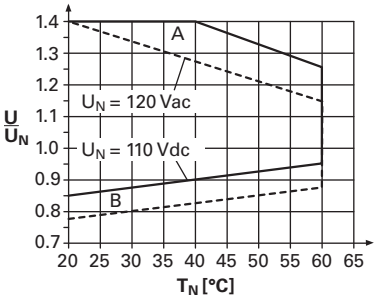

Operating Range Voltage for 24 Vdc

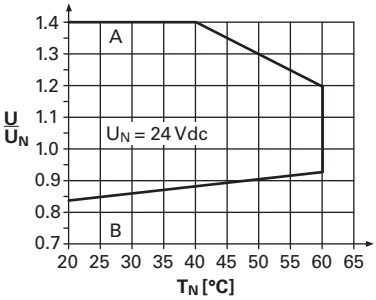

Operating Range Voltage for 24 Vac/Vdc

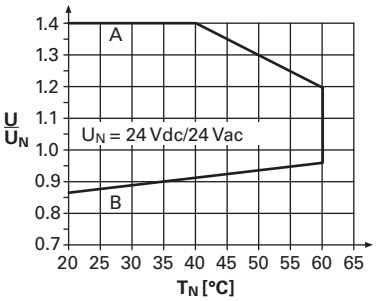

Notes

General Conditions — Direct alignment in the block, all devices 100% operating factor, horizontal or vertical mounting.

Curve A — Maximum permissible continuous operating voltage U_{max} with limiting continuous current on the contact side (see respective technical data).

Curve B — Minimum permissible relay operate voltage U_{op} after pre-excitation ①) (see respective technical data).

① Pre-excitation: Relay has been operated in a thermally steady state at the ambient temperature T_U with nominal voltage U_N and limiting continuous current on the contact side (see respective technical data) (warm coil). After being switched off for a short time, the relay must reliably pick up again at U_{op}.

Electrical Schematics

1PDT Terminal Block Relays

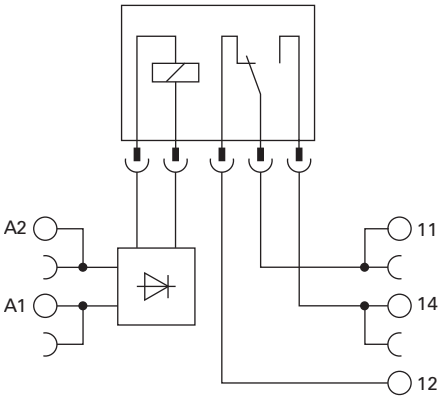

DPDT Terminal Block Relays

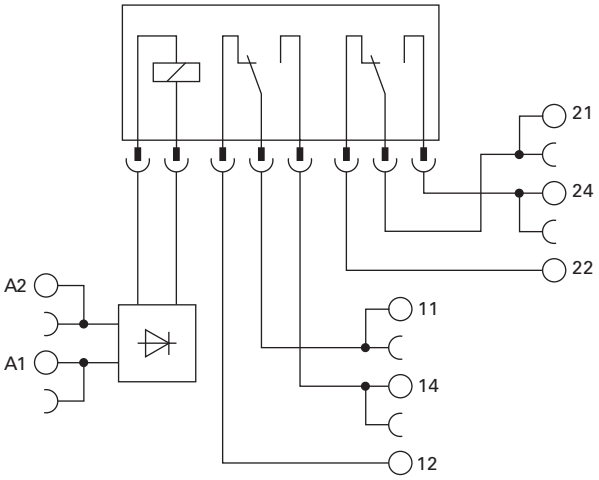

Dimensions

Approximate Dimensions in Inches (mm)

Standard 1PDT Terminal Block Relays

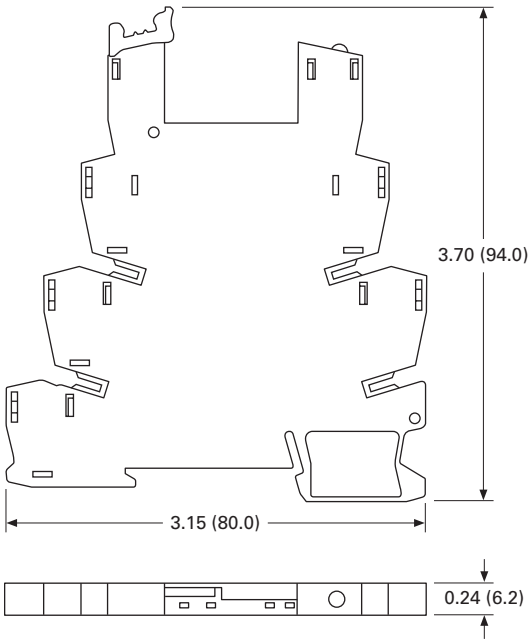

Standard DPDT Terminal Block Relays

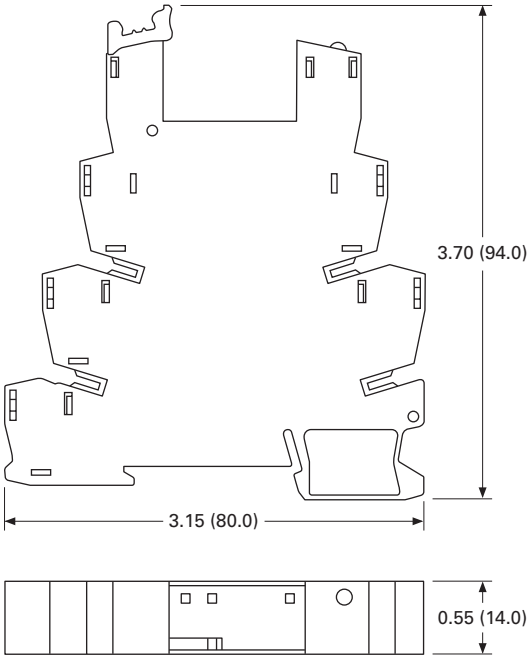

OptoCoupler Terminal Block Relay

Contents

Description	*Page*
Standard Terminal Block Relays	**V7-T3-4**
OptoCoupler Terminal Block Relays	
Product Selection	**V7-T3-13**
Technical Data and Specifications	**V7-T3-13**
Electrical Schematic	**V7-T3-14**
Dimensions	**V7-T3-14**
High Current Terminal Block Relays	**V7-T3-15**
XR Series Accessories	**V7-T3-18**

OptoCoupler Terminal Block Relays

Product Description

The ***XR*** Series OptoCoupler Terminal Block Relays can be used in all applications and consist of a pluggable miniature OptoCoupler and a basic terminal block. The ***XR*** Series uses screw or spring-cage technology, as well as offers quick system wiring, superior safety features, clear labeling and a high level of modularity.

Application Description

The ***XR*** Series OptoCoupler relays can be used as an input or output interface. They provide the typical reliability of OptoCouplers and are especially suited for high operating frequencies.

Features

- Pluggable relay allows for field replacement
- Functional plug-in bridges
- LED status indication
- DIN rail mount
- Only 6.2 mm wide
- Switching capacity up to 24 Vdc/3 A
- IP67-protected optical electronics
- Wear-resistant and bounce-free switching
- Insensitive to shock and vibration
- Integrated protection circuit
- Zero voltage switch at AC output

Standards and Certifications

- cULus listed
- CE

c UL us Listed CE

Product Selection

XRU1S24

OptoCoupler Terminal Block Relays

Rated Current	Supply Voltage	Standard Pack	Catalog Number
2 A	120 Vac/110 Vdc	10	**XRU1S120U**
2 A	24 Vdc	10	**XRU1S24**

OptoCoupler Replacement Relays

Rated Current	Supply Voltage ①	Standard Pack	Catalog Number
2 A	24 Vdc	18	**XRR1S24**
2 A	120 Vac/110 Vdc	10	**XRR1S120U**

Technical Data and Specifications

Pluggable Power OptoCoupler (Solid-State) Terminal Block Relays

Catalog Number Replacement Relay	XRU1S24 XRR1S24	XRU1S120U XRR1S120U
Input voltage	24 Vdc	120 Vac/110 Vdc
Connection Data		
Rigid solid AWG (mm^2)	26–14 (0.14–2.5)	26–14 (0.14–2.5)
Flexible stranded AWG (mm^2)	26–14 (0.14–2.5)	26–14 (0.14–2.5)
Input Data		
Input voltage	24 Vdc	120 Vac/110 Vdc
Permissible range	0.8–1.2	0.8 –1.1
Typical input current	9 mA	4 mA
Switching level 1 signal ("H")	≥0.8	≥0.8
Switching level 0 signal ("L")	≤0.4	≤0.25
Typical switch-on time	20 µS	6 ms
Typical turn-off time	500 µS	10 ms
Input protection	Polarity protection diode, free-wheeling diode	Bridge rectifier
Output Data		
Max. switching voltage	33 Vdc	33 Vdc
Min. switching voltage	3 Vdc	3 Vdc
Limiting continuous current	3 A (See derating curve)	3 A (See derating curve)
Max. inrush current	15 A (10 ms)	15 A (10 ms)
Output circuit	2-conductor floating	2-conductor floating
Output protection	Polarity protection, surge protection	Polarity protection, surge protection
Voltage drop at maximum limiting continuous current	≤ 200 mV	≤ 200 mV
General Data		
Ambient temp range	–4 °F to +140 °F (–20 °C to +60 °C)	–4 °F to +140 °F (–20 °C to +60 °C)
Rated operating mode	100% operating factor	100% operating factor
Inflammability class	V0, in accordance with UL 94	V0, in accordance with UL 94
Mechanical service life	2 x 10^7 cycles	2 x 10^7 cycles

Note

① Voltage is the rating at the base. It may not match the voltage on the specific replacement relay.

Derating Curve

OptoCoupler

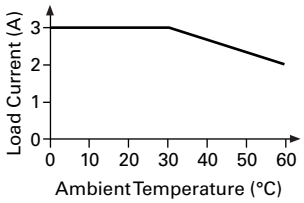

Electrical Schematic

Pluggable Power OptoCoupler (Solid-State) Terminal Block Relays

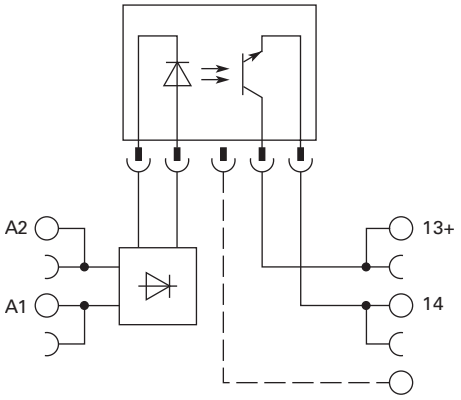

Dimensions

Approximate Dimensions in Inches (mm)

Pluggable Power OptoCoupler (Solid-State) Terminal Block Relays

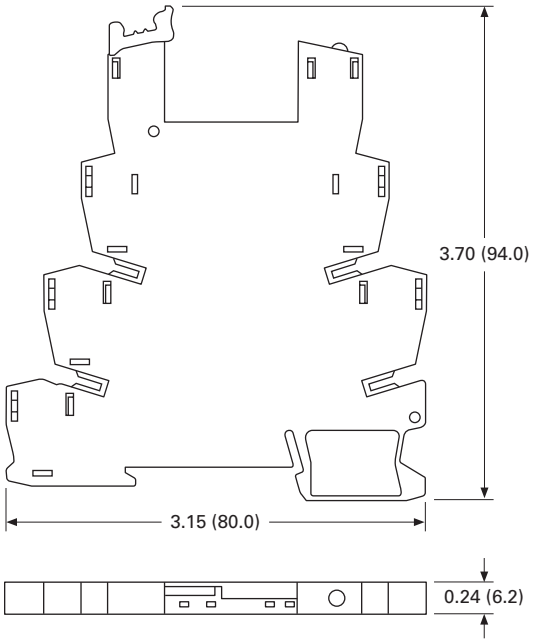

High Current Terminal Block Relay

Contents

Description	*Page*
Standard Terminal Block Relays	**V7-T3-4**
OptoCoupler Terminal Block Relays	**V7-T3-12**
High Current Terminal Block Relays	
Product Selection	**V7-T3-16**
Technical Data and Specifications	**V7-T3-16**
Electrical Schematic	**V7-T3-17**
Dimensions	**V7-T3-17**
XR Series Accessories	**V7-T3-18**

High Current Terminal Block Relays

Product Description

The ***XR*** Series Relays include products designed to meet high continuous current and/or long electrical service life applications. The ***XR*** Series Relays are plug-in interfaces that connect to basic terminal blocks that use screw connection technology. Overall width is 14 mm.

Application Description

These relays are best suited for applications that require higher continuous load currents than miniature relays can carry and switch. They can withstand inrush currents or brief overloads without damage, and allow for continuous load currents of up to 10 A. The ***XR*** Series Relay boasts an average service life of the contacts that is two or three times the normal life of a less powerful relay, resulting in service cost savings.

Features

- 14 mm wide
- Pluggable relay allows for field replacement
- Convenient plug-in bridge system
- LED status indication
- DIN Rail Mount
- IP67-protected optical electronics
- Wear-resistant and bounce-free switching
- Insensitive to shock and vibration
- Integrated protection circuit
- Zero voltage switch at AC output
- Environmentally friendly, cadmium-free contact material
- Electrical isolation between input and output

Standards and Certifications

- cULus listed
- CE

c UL us Listed CE

Product Selection

XRU1H24

High Current Terminal Block Relays

Rated Current	Supply Voltage	Standard Pack	Catalog Number
10 A	12 Vdc	10	**XRU1H12**
10 A	120 Vac/110 Vdc	10	**XRU1H120U**
10 A	24 Vdc	10	**XRU1H24**
10 A	24 Vac/Vdc	10	**XRU1H24U**

High Current Replacement Relays

Rated Current	Supply Voltage ①	Standard Pack	Catalog Number
10 A	24 Vdc	10	**XRR1H24**
10 A	24 Vac/Vdc	10	**XRR1H24U**
10 A	12 Vdc	10	**XRR1H12**
10 A	120 Vac/110 Vdc	10	**XRR1H120U**

Technical Data and Specifications

High Current Terminal Block Relays (1PDT)

Catalog Number Replacement Relay	XRU1H12 XRR1H12	XRU1H24 XRR1H24	XRU1H24U XRR1H24U	XRU1H120U XRR1H120U
Input voltage	12 Vdc	24 Vdc	24 Vac/Vdc	120 Vac/110 Vdc
Connection Data				
Rigid solid AWG (mm^2)	26–14 (0.14–2.5)	26–14 (0.14–2.5)	26–14 (0.14–2.5)	26–14 (0.14–2.5)
Flexible stranded AWG (mm^2)	26–14 (0.14–2.5)	26–14 (0.14–2.5)	26–14 (0.14–2.5)	26–14 (0.14–2.5)
Input Data for 1PDT Spring Cage Versions				
Input voltage	12 Vdc	24 Vdc	24 Vac/Vdc	120 Vac/110 Vdc
Permissible range	See **Page V7-T3-10**	See **Page V7-T3-10**	See **Page V7-T3-10**	See **Page V7-T3-10**
Typical input current	33 mA	18 mA	17.5 mA	4.5 mA (120 Vac)/4.2 mA (110 Vdc)
Typical response time	8 ms	8 ms	8 ms	7 ms
Typical release time	10 ms	10 ms	10 ms	10 ms
Input protection	Polarity protection diode, free-wheeling diode	Polarity protection diode, free-wheeling diode	Bridge rectifier	Bridge rectifier
Output Data				
Contact type	Single contact, 1PDT	Single contact, 1PDT	Single contact, 1PDT	Single contact, 1PDT
Contact material	AgNi	AgNi	AgNi	AgNi
Max. switching voltage	250 Vac/Vdc ②	250 Vac/Vdc ②	250 Vac/Vdc ②	250 Vac/Vdc ②
Min. switching voltage	12 Vac/Vdc	12 Vac/Vdc	12 Vac/Vdc	12 Vac/Vdc
Limiting continuous current	10 A ③	10 A ③	10 A ③	10 A ③
Max. inrush current	30 A (300 ms)	30 A (300 ms)	30 A (300 ms)	30 A (300 ms)
Min. switching current	100 mA	100 mA	100 mA	100 mA
Min. switching power	1.2 W	1.2 W	1.2 W	1.2 W
Miscellaneous Data				
Ambient temp range	–4 °C to +140 °F (–20 °C to +60 °C)	–4 °C to +140 °F (–20 °C to +60 °C)	–4 °C to +140 °F (–20 °C to +60 °C)	–4 °C to +140 °F (–20 °C to +60 °C)
Rated operating mode	100% operating factor	100% operating factor	100% operating factor	100% operating factor
Inflammability class	V0, in accordance with UL 94	V0, in accordance with UL 94	V0, in accordance with UL 94	V0, in accordance with UL 94
Mechanical service life	3×10^7 cycles	3×10^7 cycles	3×10^7 cycles	3×10^7 cycles

Notes

① Voltage is the rating at the base. It may not match the voltage on the specific replacement relay.

② The separating plate, XRAPLCESK, should be installed for voltages greater than 250 V (L1, L2, L3) between identical terminal points of adjacent modules. Potential bridging is then possible with the XRAFBST bridge system.

③ The current rating for the normally open contact (#14) is 10 A. The current rating for the normally closed contact (#12) is 6 A and can be increased to 10 A by bridging the two #12 contact connections.

Electrical Schematic

High Current Terminal Block Relays

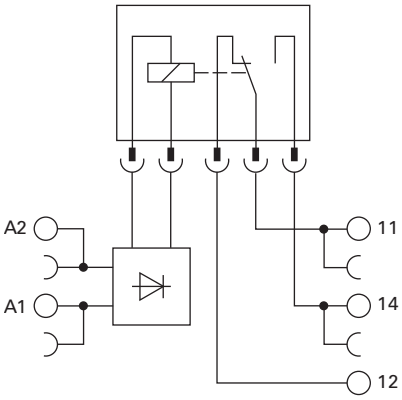

Dimensions

Approximate Dimensions in Inches (mm)

High Current Terminal Block Relays

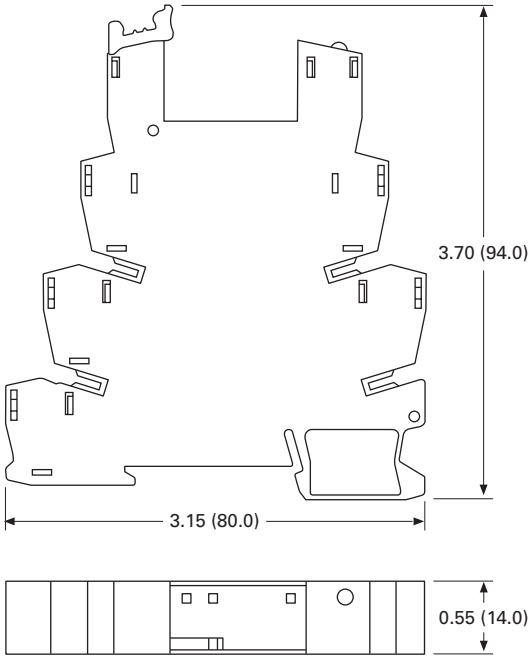

XR Series Accessories

Product Description

Power Terminal Block

The XRAPLCESK power terminal block has the same shape as the relay modules and is used to feed in the bridging potentials. The nominal current is 32 A. When the total current is less than or equal to 6 A, supply can take place directly at the connecting terminal blocks of one of the connected relays.

End Cover

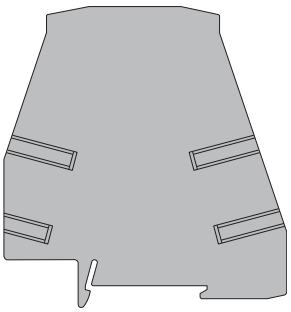

The XRAATPBK end cover is required at the start and stop of a relay strip. It can also be used for visual separation of groups of relays as well as separating relays with voltages greater than 250 V and separating neighboring bridges with different potentials. It is equipped with pre-scored break out points at the bridging positions so that individual bridges can be passed through as needed. It may also be necessary to use the end cover between adjacent relays when three phases (L1, L2, L3) are used on the contact side of the relay.

Bridges

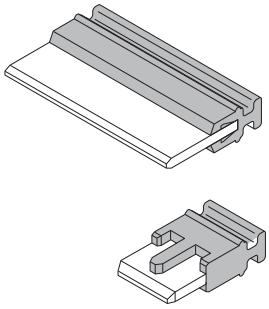

The XRAFBST colored, insulated plug-in bridge system reduces wiring time by up to 70% compared to conventionally wired relays. The XRAFBST2, 2-position bridges, are suited for bridging a smaller number of relays and total currents ≤6 A. When a circuit is supplied from both sides, the circuit can be opened at any point, allowing all other modules to continue being supplied at the same time. The XRAFBST500 allow up to 80 modules to be bridged at one time. If bridges with different potentials meet in neighboring modules, the end cover XRAATPBK should be used. All bridges are equipped with a groove for removal with a standard screwdriver.

Product Selection

XR Series Accessories

Color	Standard Pack	Catalog Number
2-Position Snap-In Jumper		
Red	10	**XRAFBST2RD**
Blue	10	**XRAFBST2BU**
Gray	10	**XRAFBST2GY**
80-Position Snap-In Jumper		
Red	5	**XRAFBST500RD**
Blue	5	**XRAFBST500BU**
Gray	5	**XRAFBST500GY**
Power Terminal Block		
Gray	5	**XRAPLCESK**
End Cover		
Black	5	**XRAATPBK**

Technical Data and Specifications

Power Terminal Block

Description	Specification
Connection Data	
Rigid solid AWG (mm^2)	24–10 (0.2–4)
Flexible stranded AWG (mm^2)	24–10 (0.2–4)
Miscellaneous Data	
Max. current	32 A
Max. voltage	250 Vac ①

Note

① The separating plate, XRAPLCESK, should be installed for voltages greater than 250 V (L1, L2, L3) between identical terminal points of adjacent modules. Potential bridging is then possible with the XRAFBST bridge system.

Programmable Relays

Contents

Description	*Page*
Programmable Relays	
easy500/700/800 Programmable Relays	**V7-T3-20**
easy802/806 Programmable Relays with SmartWire-DT	**V7-T3-26**
easyRelay and MFD Expansion Modules	**V7-T3-30**
MFD-Titan Multi-Function Displays	**V7-T3-33**
easyRelay Communication Modules	**V7-T3-40**
easyRelay Power Supplies, Accessories and Software	**V7-T3-43**

Product Overview

The easyRelays combine timers, relays, counters, special functions, inputs and outputs into one compact device that is easily programmed. The easyRelay family of products provides an exceptional level of flexibility together with a substantial savings of commissioning time and effort.

The easyRelays are available in more than 35 styles that support from 12 I/O up to a network of up to 320 I/O points, providing the ideal solution for lighting, energy management, industrial control, irrigation, pump control, HVAC and home automation.

Once easyRelays are installed, changes are easily accomplished through front panel programming, eliminating the need to change wiring and minimizing downtime.

The easy802/806 relays are even more powerful than the easy800 series and include an integrated SmartWire-DT gateway. Conventional hardwiring to pushbuttons, selector switches, pilot devices and contactors can now be eliminated, allowing for a dramatic increase in panel wiring productivity. For more information on SmartWire-DT and how it can increase productivity, go to *www.eaton.com/smartwiredt*.

Application Description

The easyRelays excel in traditional applications where multiple relays, timers and pushbuttons are used. Applications span residential, commercial and industrial installations.

Typical control applications are:

- Lighting controls
- Duplex pump controls
- Water fountain controls
- Parking garage access controls
- Refrigeration control system
- Greenhouse temperature and ventilation controls
- Booster pump controls

See publication no. **AP05013001E** for the easyRelay application guide. Download from www.eaton.com/easyrelays.

easy500/700/800 Programmable Relays

Contents

Description	*Page*
easy500/700/800 Programmable Relays	
System Overview	**V7-T3-21**
Product Selection	**V7-T3-23**
Technical Data and Specifications	**V7-T3-24**
Dimensions	**V7-T3-25**
easy802/806 Programmable Relays with SmartWire-DT	**V7-T3-26**
easyRelay and MFD Expansion Modules	**V7-T3-30**
MFD-Titan Multi-Function Displays	**V7-T3-33**
easyRelay Communication Modules	**V7-T3-40**
easyRelay Power Supplies, Accessories and Software	**V7-T3-43**

easy500/700/800 Programmable Relays

Product Description

Three families make up the easyRelay programmable relay product line. All models are available with and without displays. DIN rail mounted.

easy500—for controlling small applications with up to 12 input/output signals. Connectable to Ethernet.

easy700—for controlling medium-sized applications with 20 I/O points (expandable to 40 I/O points). Connectable to Ethernet and bus systems.

easy800—for controlling large-scale applications with 20 points, expandable to 40 points locally, and expandable using the easyNet network up to 320 I/O points. Connectable to Ethernet and bus systems.

The easyNet integrated network provides easy and inexpensive linking of up to eight easy800 devices over a distance of up to 1000 meters. Each easy800 device can run its own program, or be used as a distributed input/output module. Connect up to eight controllers with up to 40 I/O to obtain 320 I/O.

Standards

- CSA C22.2 No. 142-M1987
- CSA C22.2 No. 213-M1987
- EN 55011
- EN 50178
- EN 61131-2
- IEC EN 61000-4
- IEC 60068-2-6
- IEC 60068-2-27
- UL 508

Certifications

- UL
- CSA
- CE
- CSA Class I, Div. 2, Groups A, B, C, D; Temp. Code T3C
- C-Tick
- GOST-R
- Ukrain-GOST

Shipping Approvals

- Bureau Veritas
- Det Norske Veritas
- Germanischer Lloyd
- Lloyd's Register of Shipping

Catalog Number Selection

easy500/700/800

EASY512 - AC - R C _

Module Type
- **EASY5xx** = 500 Series
- **EASY7xx** = 700 Series
- **EASY8xx** = 800 Series

Digital Inputs
- **AB** = 24 Vac
- **AC** = 110–240 Vac
- **DA** = 12 Vdc
- **DC** = 24 Vdc

Digital Outputs
- **R** = Relay
- **T** = Transistor

Clock
- **C** = Clock
- **Blank** = No clock

Display
- **Blank** = Display
- **X** = No display

Note: Not all combinations are possible. See selection tables.

System Overview

easy500/700 Programmable Relays

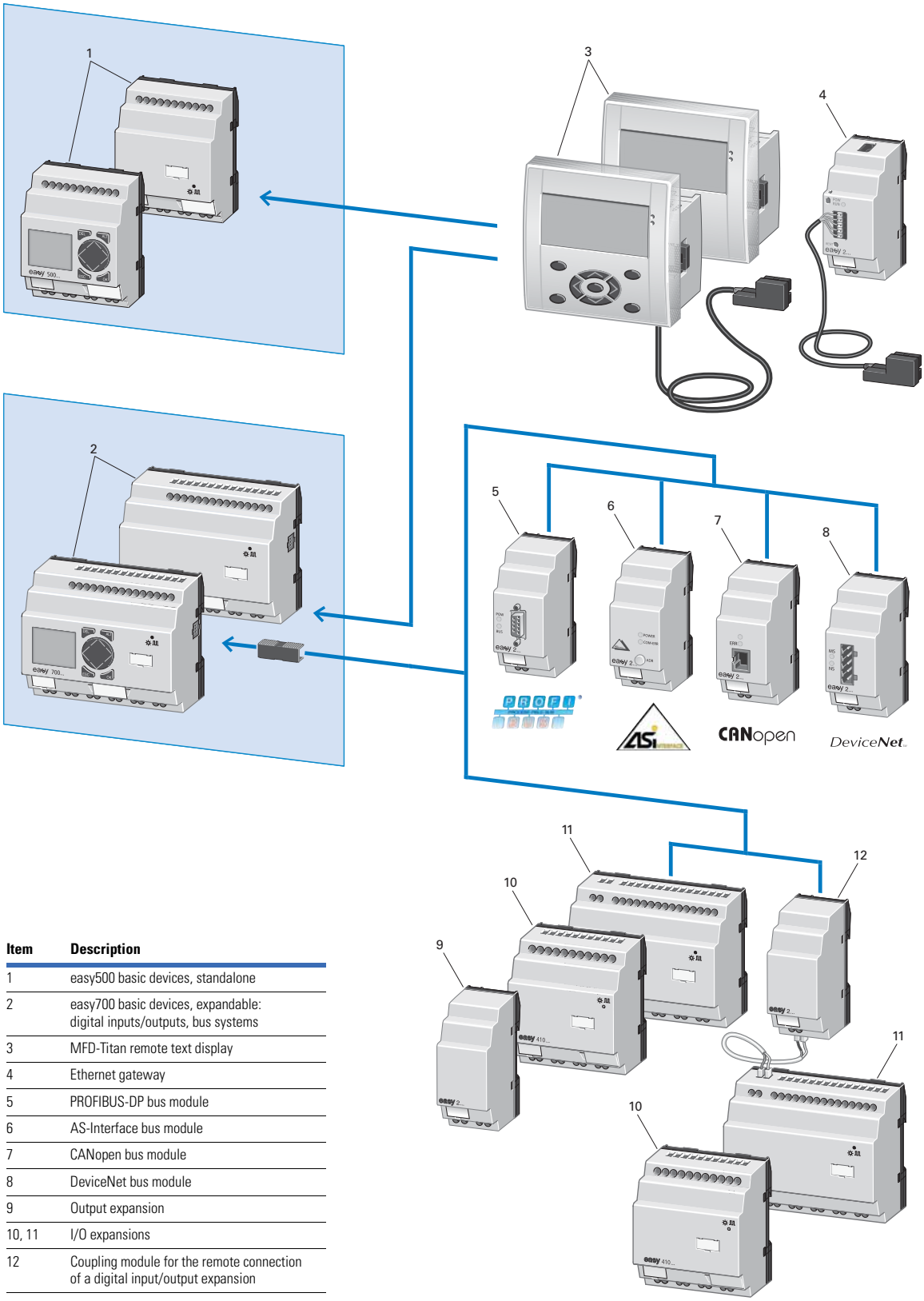

Item	Description
1	easy500 basic devices, standalone
2	easy700 basic devices, expandable: digital inputs/outputs, bus systems
3	MFD-Titan remote text display
4	Ethernet gateway
5	PROFIBUS-DP bus module
6	AS-Interface bus module
7	CANopen bus module
8	DeviceNet bus module
9	Output expansion
10, 11	I/O expansions
12	Coupling module for the remote connection of a digital input/output expansion

easy800 Programmable Relay

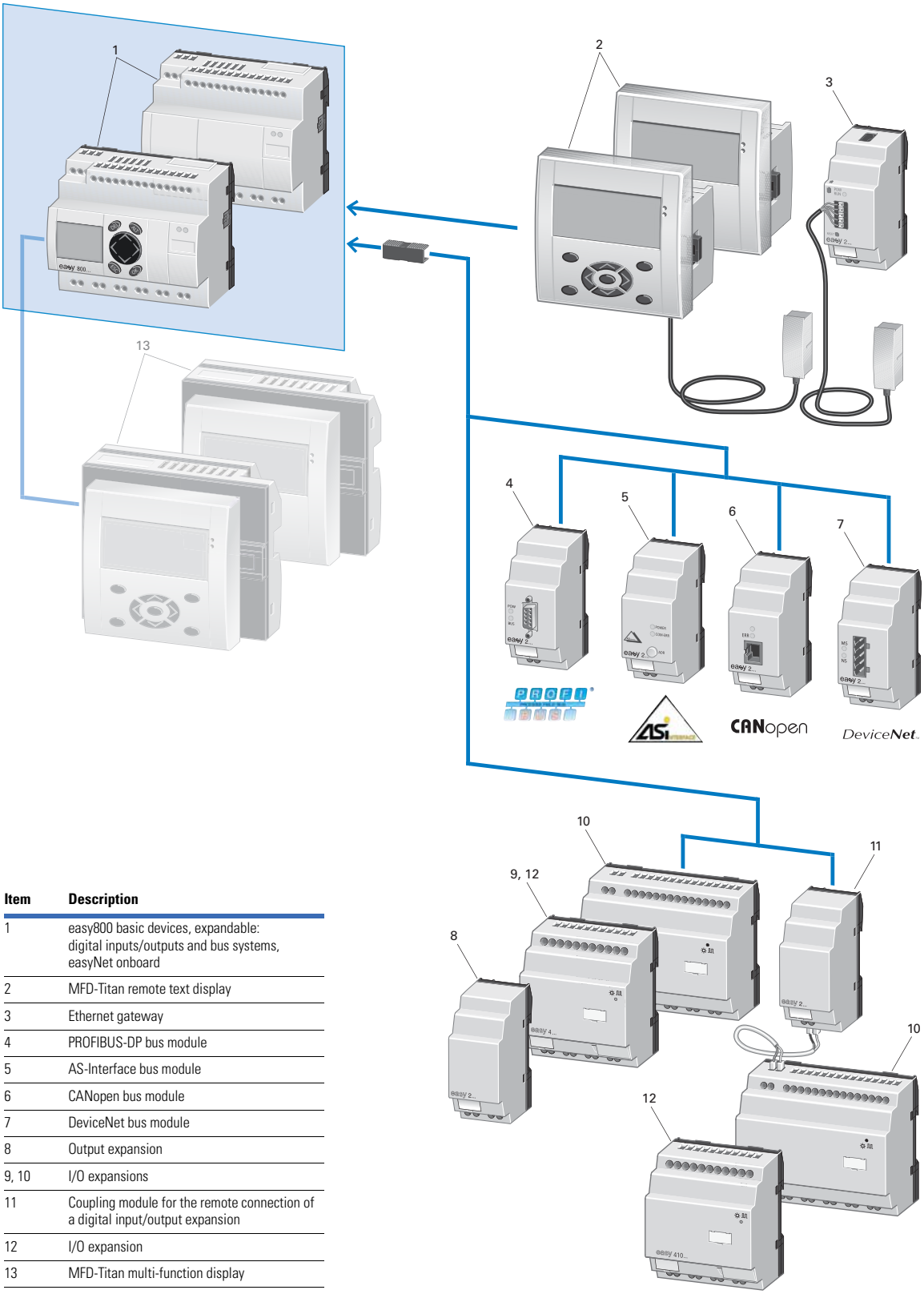

Item	Description
1	easy800 basic devices, expandable: digital inputs/outputs and bus systems, easyNet onboard
2	MFD-Titan remote text display
3	Ethernet gateway
4	PROFIBUS-DP bus module
5	AS-Interface bus module
6	CANopen bus module
7	DeviceNet bus module
8	Output expansion
9, 10	I/O expansions
11	Coupling module for the remote connection of a digital input/output expansion
12	I/O expansion
13	MFD-Titan multi-function display

Product Selection

easy500—Display

easy500—No Display

easy500 Programmable Relays (Standalone)

Description	Inputs 24 Vac	110–240 Vac	12 Vdc	24 Vdc	Analog ①	Outputs Relay	Transistor	Catalog Number
Display								
12 I/O, no clock	—	8	—	—	—	4	—	**EASY512-AC-R**
	—	—	—	8	2	4	—	**EASY512-DC-R**
12 I/O, clock	8	—	—	—	2	4	—	**EASY512-AB-RC**
	—	8	—	—	—	4	—	**EASY512-AC-RC**
	—	—	8	—	2	4	—	**EASY512-DA-RC**
	—	—	—	8	2	4	—	**EASY512-DC-RC**
	—	—	—	8	2	—	4	**EASY512-DC-TC**
No Display								
12 I/O, clock	8	—	—	—	2	4	—	**EASY512-AB-RCX**
	—	8	—	—	—	4	—	**EASY512-AC-RCX**
	—	—	8	—	2	4	—	**EASY512-DA-RCX**
	—	—	—	8	2	4	—	**EASY512-DC-RCX**
	—	—	—	8	2	—	4	**EASY512-DC-TCX**

easy700—Display

easy700—No Display

easy700 Programmable Relays (Expandable and Networkable)

Description	Inputs 24 Vac	110–240 Vac	12 Vdc	24 Vdc	Analog ①	Outputs Relay	Transistor	Catalog Number
Display								
18 I/O, clock	12	—	—	—	4	6	—	**EASY719-AB-RC**
	—	12	—	—	—	6	—	**EASY719-AC-RC**
	—	—	12	—	4	6	—	**EASY719-DA-RC**
	—	—	—	12	4	6	—	**EASY719-DC-RC**
20 I/O, clock	—	—	—	12	4	—	8	**EASY721-DC-TC**
No Display								
18 I/O, clock	12	—	—	—	4	6	—	**EASY719-AB-RCX**
	—	12	—	—	—	6	—	**EASY719-AC-RCX**
	—	—	12	—	4	6	—	**EASY719-DA-RCX**
	—	—	—	12	4	6	—	**EASY719-DC-RCX**
20 I/O, clock	—	—	—	12	4	—	8	**EASY721-DC-TCX**

easy800—Display

easy800—No Display

easy800 Programmable Relays (Expandable and Networkable)

Description	Inputs 110–240 Vac	24 Vdc	Analog ①	Outputs Relay	Transistor	Analog	Catalog Number
Display							
18 I/O, clock	12	—	—	6	—	—	**EASY819-AC-RC**
	—	12	4	6	—	—	**EASY819-DC-RC**
19 I/O, clock	—	12	4	6	—	1	**EASY820-DC-RC**
20 I/O, clock	—	12	4	—	8	—	**EASY821-DC-TC**
21 I/O, clock	—	12	4	—	8	1	**EASY822-DC-TC**
No Display							
18 I/O, clock	12	—	—	6	—	—	**EASY819-AC-RCX**
	—	12	4	6	—	—	**EASY819-DC-RCX**
19 I/O, clock	—	12	4	6	—	1	**EASY820-DC-RCX**
20 I/O, clock	—	12	4	—	8	—	**EASY821-DC-TCX**
21 I/O, clock	—	12	4	—	8	1	**EASY822-DC-TCX**

Note

① Analog inputs optional. Use of analog inputs will result in a decrease in the same number of available digital inputs.

Technical Data and Specifications

easy500 Series

Type	EASY512-AB…	EASY512-AC…	EASY512-DA…	EASY512-DC-R…	EASY512-DC-TC.
Supply voltage	24 Vac	100–240 Vac	12 Vdc	24 Vdc	24 Vdc
Heat dissipation	5 VA	5 VA	2 W	2 W	2 W
Continuous current outputs ①	8 A	8 A	8 A	8 A	0.5 A
Short-circuit proof with power factor 1	Line protection B16, 600 A				—
Short-circuit proof with power factor 0.7…0.7	Line protection B16, 900 A				—
Mounting	On 35 mm DIN rail or screw mounting with ZB4-101-GF1 mounting feet				
Connection cables					
Solid	0.2–4.0 mm^2 (AWG 22–12)	0.2–4.0 mm^2 (AWG 22–12)	0.2–4.0 mm^2 (AWG 22–12)	0.2–4.0 mm^2 (AWG 22–12)	0.2–4.0 mm^2 (AWG 22–12)
Flexible	0.2–2.5 mm^2 (AWG 22–12)	0.2–2.5 mm^2 (AWG 22–12)	0.2–2.5 mm^2 (AWG 22–12)	0.2–2.5 mm^2 (AWG 22–12)	0.2–2.5 mm^2 (AWG 22–12)
Degree of protection	IP20	IP20	IP20	IP20	IP20
RFI suppression	EN 55011, EN 55022 Class B, IEC 61000-6-1, 2, 3, 4				
Ambient operating temperature	–25 °C to +55 °C	–25 °C to +55 °C	–25 °C to +55 °C	–25 °C to +55 °C	–25 °C to +55 °C
Transport and storage temperature	–40 °C to +70 °C	–40 °C to +70 °C	–40 °C to +70 °C	–40 °C to +70 °C	–40 °C to +70 °C
Hazardous location	CSA Class I, Div. 2, Groups A, B, C, D; Temp. Code T3C				

easy700 Series

Type	EASY719-AB…	EASY719-AC…	EASY719-DA…	EASY719-DC-RC…	EASY721-DC-TC.
Supply voltage	24 Vac	100–240 Vac	12 Vdc	24 Vdc	24 Vdc
Heat dissipation	7 VA	10 VA	3.5 W	3.5 W	3.5 W
Continuous current outputs ①	8 A	8 A	8 A	8 A	0.5 A
Short-circuit proof with power factor 1	Line protection B16, 600 A	Line protection B16, 600 A	Line protection B16, 600 A	Line protection B16, 600 A	—
Short-circuit proof with power factor 0.7…0.7	Line protection B16, 900 A	Line protection B16, 900 A	Line protection B16, 900 A	Line protection B16, 900 A	—
Mounting	On 35 mm DIN rail or screw mounting with ZB4-101-GF1 mounting feet				
Connection cables					
Solid	0.2–4.0 mm^2 (AWG 22–12)	0.2–4.0 mm^2 (AWG 22–12)	0.2–4.0 mm^2 (AWG 22–12)	0.2–4.0 mm^2 (AWG 22–12)	0.2–4.0 mm^2 (AWG 22–12)
Flexible	0.2–2.5 mm^2 (AWG 22–12)	0.2–2.5 mm^2 (AWG 22–12)	0.2–2.5 mm^2 (AWG 22–12)	0.2–2.5 mm^2 (AWG 22–12)	0.2–2.5 mm^2 (AWG 22–12)
Degree of protection	IP20	IP20	IP20	IP20	IP20
RFI suppression	EN 55011, EN 55022 Class B, IEC 61000-6-1, 2, 3, 4				
Ambient operating temperature	–25 °C to +55 °C	–25 °C to +55 °C	–25 °C to +55 °C	–25 °C to +55 °C	–25 °C to +55 °C
Transport and storage temperature	–40 °C to +70 °C	–40 °C to +70 °C	–40 °C to +70 °C	–40 °C to +70 °C	–40 °C to +70 °C
Hazardous location	CSA Class I, Div. 2, Groups A, B, C, D; Temp. Code T3C				

easy800 Series

Type	EASY819-AC…	EASY819-DC-RC…	EASY820-DC-RC…	EASY821-DC-TC…	EASY822-DC-TC.
Supply voltage	100–240 Vac	24 Vdc	24 Vdc	24 Vdc	24 Vdc
Heat dissipation	10 VA	3.4 W	3.4 W	3.4 W	3.4 W
Continuous current outputs ①	8 A	8 A	8 A	8 A	0.5 A
Short-circuit proof with power factor 1	Line protection B16, 600 A	Line protection B16, 600 A	Line protection B16, 600 A	Line protection B16, 600 A	—
Short-circuit proof with power factor 0.7…0.7	Line protection B16, 900 A	Line protection B16, 900 A	Line protection B16, 900 A	Line protection B16, 900 A	—
Mounting	On 35 mm DIN rail or screw mounting with ZB4-101-GF1 mounting feet				
Connection cables					
Solid	0.2–4.0 mm^2 (AWG 22–12)	0.2–4.0 mm^2 (AWG 22–12)	0.2–4.0 mm^2 (AWG 22–12)	0.2–4.0 mm^2 (AWG 22–12)	0.2–4.0 mm^2 (AWG 22–12)
Flexible	0.2–2.5 mm^2 (AWG 22–12)	0.2–2.5 mm^2 (AWG 22–12)	0.2–2.5 mm^2 (AWG 22–12)	0.2–2.5 mm^2 (AWG 22–12)	0.2–2.5 mm^2 (AWG 22–12)
Degree of protection	IP20	IP20	IP20	IP20	IP20
RFI suppression	EN 55011, EN 55022 Class B, IEC 61000-6-1, 2, 3, 4				
Ambient operating temperature	–25 °C to +55 °C	–25 °C to +55 °C	–25 °C to +55 °C	–25 °C to +55 °C	–25 °C to +55 °C
Transport and storage temperature	–40 °C to +70 °C	–40 °C to +70 °C	–40 °C to +70 °C	–40 °C to +70 °C	–40 °C to +70 °C
Hazardous location	CSA Class I, Div. 2, Groups A, B, C, D; Temp. Code T3C				

Note

① Relay = 8 A (10 A to UL) with resistive load, 3 A with inductive load. Transistor outputs = 0.5 A/24 Vdc, maximum four outputs switchable in parallel.

Dimensions

Approximate Dimensions in Inches (mm)

easy500 Series, Drawing Number MD05013001E

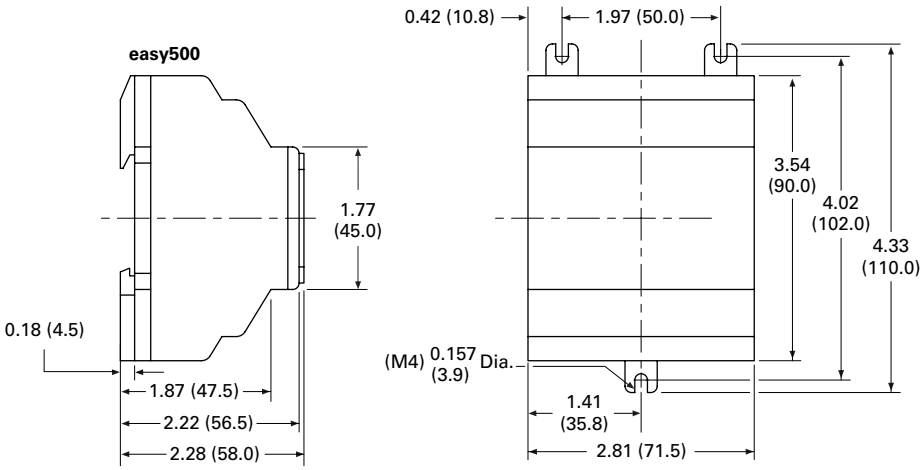

easy700 Series, Drawing Number MD05013002E

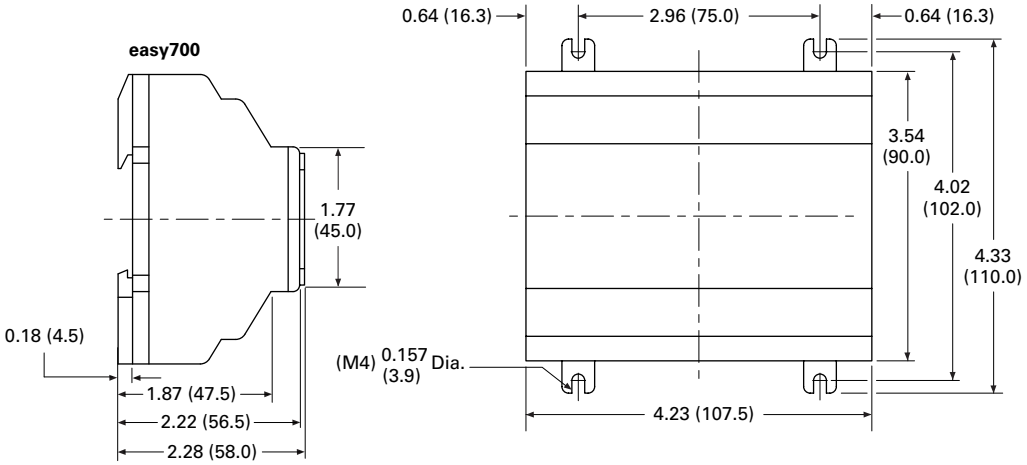

easy800 Series, Drawing Number MD05013003E

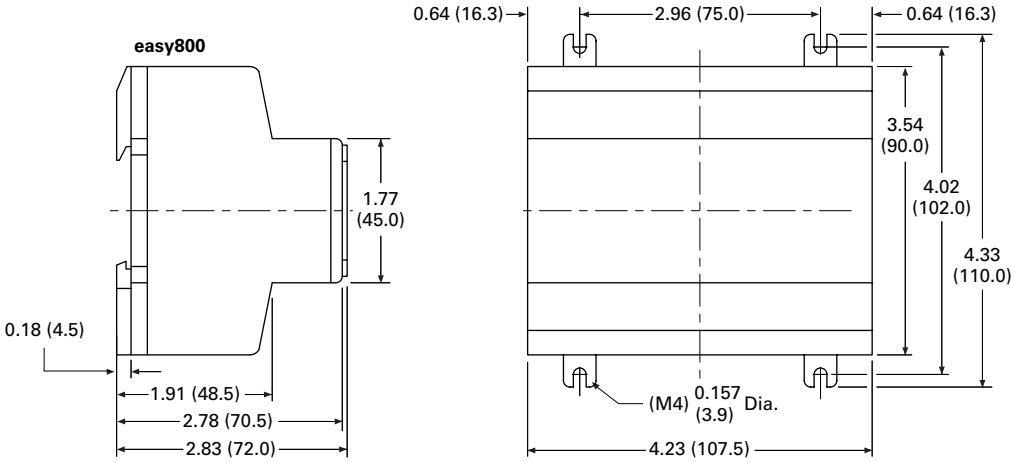

easy802/806 Programmable Relays with SmartWire-DT

Contents

Description	*Page*
easy500/700/800 Programmable Relays	**V7-T3-20**
easy802/806 Programmable Relays with SmartWire-DT	
Product Selection	**V7-T3-27**
Accessories	**V7-T3-27**
Technical Data and Specifications	**V7-T3-28**
Dimensions	**V7-T3-29**
easyRelay and MFD Expansion Modules	**V7-T3-30**
MFD-Titan Multi-Function Displays	**V7-T3-33**
easyRelay Communication Modules	**V7-T3-40**
easyRelay Power Supplies, Accessories and Software	**V7-T3-43**

easy802/806 Programmable Relays with SmartWire-DT

Product Description

SmartWire-DT is a high-performance system that can be used to quickly and easily connect motor control components such as relays, contactors, pilot devices, manual motor protectors, soft starters ① and variable frequency drives ① as well as digital and analog input/output modules. On the new easy800 with integrated SmartWire-DT master, up to 99 SmartWire-DT devices in total with up to 166 inputs/outputs can be connected via the SmartWire-DT line. All required supply voltages, including those for bus devices as well as 24 Vdc for the contactors, are provided directly with the flat eight-pole SmartWire-DT bus line. This reduces wiring effort and troubleshooting and saves time and costs.

The easy802 features a POW power feeder for regulating power to the device as well as the SmartWire-DT devices. A second AUX power feeder provides the connected contactors with 24 Vdc. A separate 24 Vdc power supply is required to provide 24 Vdc power to the easy802 or easy806 controllers. The configuration of the SmartWire-DT devices is undertaken at a touch of the provided Configuration button. LEDs provide feedback on the connecting states on the device and the SmartWire-DT line. The serial interface serves for programming as well as for connection of a remote text display, touch panel or for connection to the Ethernet.

In addition to the functionality of the easy802, the easy806 also features four fast inputs (5 kHz). Two of the four inputs can also be configured as fast outputs (5 kHz) (transistor 24 Vdc, 0.1 A). In addition to the additional inputs/outputs on easy806, there is a connection option to the easyNet. Up to eight EASY806-DC-SWD controllers can be connected via easyNet, allowing up to 1360 inputs/outputs.

For more information on SmartWire-DT and related components, see **Tab 9** of this volume or go to www.eaton.com/smartwiredt.

Standards

- EN 50178
- IEC/EN 60947
- UL 508

Certifications

- cULus
- CE
- C-Tick

c UL us Listed

CE

Note

① Soft starters and variable frequency drives will be available with direct SmartWire-DT connectivity in late 2013.

Product Selection

Control relay for connection of SmartWire-DT and simultaneously for supply of power to the SmartWire-DT devices, such as switchgear and contactors.

easy800 with SmartWire-DT

	Supply Voltage	Description	Catalog Number
EASY802-DC-SWD	24 Vdc	Control relay with SmartWire-DT	**EASY802-DC-SWD**
EASY806-DC-SWD	24 Vdc	Control relay with SmartWire-DT, four inputs, two of which can be used as outputs (transistor 24 Vdc, 0.1 A), easyNet onboard	**EASY806-DC-SWD**

Remote Displays

Both the easy802 and easy806 controllers can be connected to a MFD remote display or a XV touch panel display with Galileo.

Accessories

Accessories—easy800

	Description	Catalog Number
MFD-80	MFD display, NEMA 4X indoor rated	**MFD-80**
MFD-CP4	24 Vdc power / communication module	**MFD-CP4**
	easy802/806 to MFD-CP4 communication cable, 1.5m	**EU4A-RJ45-CAB2**
	easy802/806 to XV HMI communication cable, 2m	**EU4A-RJ45-CAB1**

Technical Data and Specifications

easy802/806 Programmable Relays with SmartWire-DT

Description		Unit	Specification
Ambient Climatic Conditions			
Cold to IEC 60068-2-1, heat to IEC 60068-2-2, damp heat, constant, to IEC 60068-2-78; cyclical to IEC 60068-2-30; temperature change to IEC 68000-2-14			
Operating ambient temperature		°C (°F)	–25 ° to +55 ° (–13 ° to +131 °)
Condensation			Prevent condensation by means of suitable measures
LCD display (reliable legible)		°C (°F)	0 ° to +55 ° (32 ° to +131 °)
Storage		°C (°F)	–40 ° to +70 ° (–40 ° to +158 °)
Relative humidity, noncondensing (IEC EN 60068-2-30)		%	5 to 95
Air pressure (in operation)		hPa	795 up to 1080
Ambient Mechanical Conditions			
Protection type EN 50178, IEC 60529, VBG4			IP20
Vibrations (IEC EN 60068-2-6)			
Constant amplitude: easy800-SWD; 3.5 mm		Hz	5–8.4
Constant acceleration: easy800-SWD: 1g		Hz	8.4–150
Mechanical shock resistance (IEC EN 60068-2-27) semi-sinusoidal 15g / 11 ms	Shocks		18
Drop (IEC EN 60068-2-31)	Drop height	mm	50
Free fall, packaged (IEC EN 60068-2-32)		m	0.3
Electromagnetic Compatibility (EMC)			
Electrostatic discharge (ESD), to IEC EN 61000-4-2			
Air discharge		kV	8
Contact discharge		kV	6
Electromagnetic fields (RFI), to IEC EN 61000-4-3			
0.8–1.0 GHz		V/m	10
1.4–2.0 GHz		V/m	3
2.0–2.7 GHz		V/m	1
Radio interference suppression			EN 55011 Class B
Burst, to IEC EN 61000-4-4			
Supply cables		kV	2
Signal cables		kV	2
easyNet		kV	2
SWD-line		kV	2
Power pulses (surge), to IEC EN 61000-4-5 (supply cables, symmetrical)		kV	1
Radiated RFI, to IEC EN 61000-4-6		V	10
Insulation Resistance			
Overvoltage category			III
Pollution degree			2
Clearance in air and creepage distances			EN 50178, UL 508, CSA C22.2, No. 142
Insulation resistance			EN 50178
Terminal Capacity			
Solid, minimum to maximum		mm^2	0.2 to 1.5 (AWG 24–16)
Flexible with ferrule, minimum to maximum		mm^2	0.2 to 1.5 (AWG 24–16)
DC POW Rated Operational Voltage			
Rated value U_e		Vdc, (%)	24 DC (–15/+20)
Permissible range ①		Vdc	20.4–28.8
Residual ripple		%	≤ 5
Protection against polarity reversal			Yes
Input current			
At rated operating voltage		mA	easy802: 500 / easy806: 900
Inrush current and duty factor			12.5 A for 6 ms
Voltage dips (IEC EN 61131-2)		ms	10

Note

① Use power-feed modules if the cable length of the SWD line causes excessive voltage drop.

easy802/806 Programmable Relays with SmartWire-DT, continued

Description	Unit	Specification
Heat dissipation		
At 24 Vdc	W	easy802: max. 5 / easy806: max. 6
Fuse	A	≥ 3
Potential isolation (easy800-SWD)		
To auxiliary ①		Yes
To easyNet ①		Yes
To serial interface		Yes
To easyLink ①		No
To inputs ①		No
To outputs ①		No
To SWD ①		No
DC AUX Rated Operational Voltage (easy800-SWD)		
Rated value U_e	Vdc, (%)	24 (–15/+20)
Permissible range U_{AUX}	Vdc	20.4–28.8
Residual ripple	%	≤ 5
Input current ② (max.)	A	2 (UL) / 3 (CE)
Rated operational voltage of the 24 Vdc stations	V	U_{AUX} –0.3 V
Protection against polarity reversal		Yes
Short-circuit strength		No
Fuse	A	≤ 2 (UL) external fuse with FAZ B2
Heat dissipation		
At 24 Vdc	W	Normally 1
Potential isolation (easy800-SWD)		
To POW power supply, inputs and outputs		Yes
To PC interface (COM), easyNet		Yes
To SWD		Yes

Notes

① If present.

② If contactors with a higher total power consumption are connected, an EU5C-SWD-PF1 or EU5C-SWD-PF2 power-feed module must be used.

Dimensions

Approximate Dimensions in Inches (mm)

easy802 and easy806 Controllers

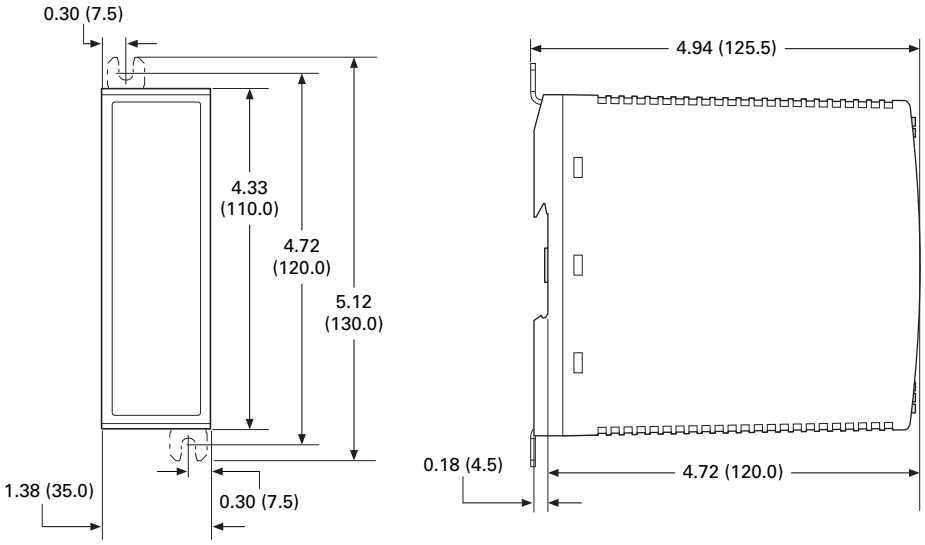

easyRelay Expansion Modules

Contents

Description	*Page*
easy500/700/800 Programmable Relays	**V7-T3-20**
easy802/806 Programmable Relays with SmartWire-DT	**V7-T3-26**
easyRelay and MFD Expansion Modules	
Product Selection	**V7-T3-31**
Technical Data and Specifications	**V7-T3-31**
Dimensions	**V7-T3-32**
MFD-Titan Multi-Function Displays	**V7-T3-33**
easyRelay Communication Modules	**V7-T3-40**
easyRelay Power Supplies, Accessories and Software	**V7-T3-43**

easyRelay and MFD Expansion Modules

Product Description

Expansion modules are available for increasing the input/output of the easy700/800 and MFD-Titan multi-function displays to 24 inputs and up to 16 outputs. Expansion modules can be mounted directly to the easy700 or easy800 relays or up to 98 ft (30m) away using coupling module EASY200-EASY.

Standards

- CSA C22.2 No. 142-M1987
- CSA C22.2 No. 213-M1987
- EN 55011
- EN 50178
- EN 61131-2
- IEC EN 61000-4
- IEC 60068-2-6
- IEC 60068-2-27
- UL 508

Certifications

- UL
- CSA
- CE
- CSA Class I, Div. 2, Groups A, B, C, D; Temp. Code T3C
- C-Tick
- GOST-R
- Ukrain-GOST

Shipping Approvals

- Bureau Veritas
- Det Norske Veritas
- Germanischer Lloyd
- Lloyd's Register of Shipping

Product Selection

EASY618_

Digital I/O Expansion Modules

Can be used via easyLink.

Supply Voltage	Digital Inputs	Outputs Relay 10 A (UL)	Outputs Transistor	Catalog Number
100–240 Vac	12	6	—	**EASY618-AC-RE**
24 Vdc	12	6	—	**EASY618-DC-RE**
24 Vdc	12	—	8	**EASY620-DC-TE**
24 Vdc	6	4	—	**EASY410-DC-RE**
24 Vdc	6	—	4	**EASY410-DC-TE**
24 Vdc	—	2	—	**EASY202-RE**
For distributed connection of a digital input/output expansion at up to 98 ft (30m) distance				**EASY200-EASY**

EASY406_

Analog I/O Expansion Modules

Can be used via easyLink.

Supply Voltage	Inputs Digital/ Analog	Inputs Can Be Used for Digital	Digital Outputs Relay 10 A (UL)	Digital Outputs Transistor	Analog Outputs	Catalog Number
24 Vdc	1/2	2	—	2	1	**EASY406-DC-ME**
24 Vdc	1/6	2	—	2	2	**EASY411-DC-ME**

Technical Data and Specifications

easyRelay I/O Expansion Modules

Type	EASY202-RE	EASY618-AC-RE	EASY618-DC-RE	EASY620-DC-TE	EASY200-EASY
Supply voltage	—	100 – 240 Vac	24 Vac	24 Vac	—
Heat dissipation	1 W	10 VA	4 W	4 W	1 W
Continuous current outputs ①	8 A	8 A	8 A	0.5 A	—
Short-circuit proof with power factor 1	Line protection B16, 600 A	Line protection B16, 600 A	Line protection B16, 600 A	Line protection B16, 600 A	—
Short-circuit proof with power factor 0.7…0.7	Line protection B16, 900 A	Line protection B16, 900 A	Line protection B16, 900 A	Line protection B16, 900 A	—
Connection cables					
Solid	0.2–4.0 mm^2 (AWG 22–12)	0.2–4.0 mm^2 (AWG 22–12)	0.2–4.0 mm^2 (AWG 22–12)	0.2–4.0 mm^2 (AWG 22–12)	0.2–4.0 mm^2 (AWG 22–12)
Flexible	0.2–2.5 mm^2 (AWG 22–12)	0.2–2.5 mm^2 (AWG 22–12)	0.2–2.5 mm^2 (AWG 22–12)	0.2–2.5 mm^2 (AWG 22–12)	0.2–2.5 mm^2 (AWG 22–12)
Degree of protection	IP20	IP20	IP20	IP20	IP20
RFI suppression	EN 55011, EN 55022 Class B, IEC 61000-6-1,2,3,4				
Ambient operating temperature	–25 °C to +55 °C	–25 °C to +55 °C	–25 °C to +55 °C	–25 °C to +55 °C	–25 °C to +55 °C
Transport and storage temperature	–40 °C to +70 °C	–40 °C to +70 °C	–40 °C to +70 °C	–40 °C to +70 °C	–40 °C to +70 °C
Certification, standards	EN 50178, IEC/EN 60947, UL, CSA				
Mounting	On 35 mm DIN rail or screw mounting with ZB4-101-GF1 mounting feet				

Dimensions

Approximate Dimensions in Inches (mm)

easy600 Series, Drawing Number MD05013002E

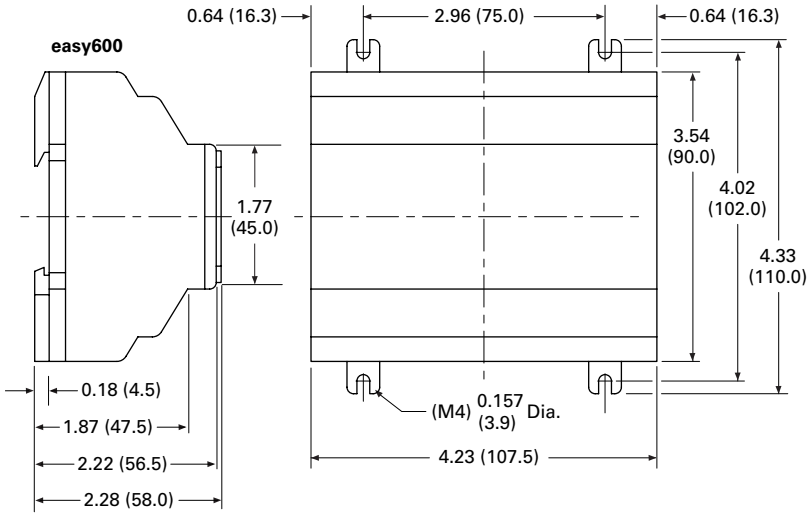

EASY202-RE/EASY200-EASY/EASY205-ASI Series, Drawing Number MD05013012E

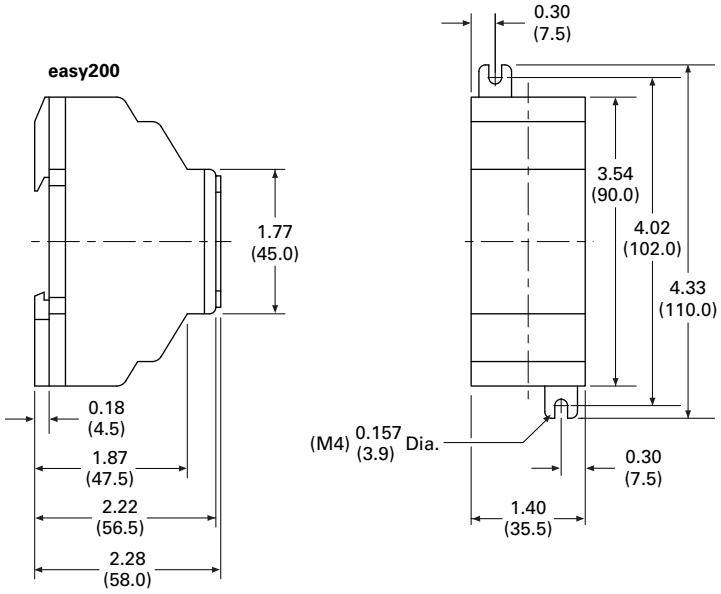

MFD-Titan Multi-Function Displays

Contents

Description	*Page*
easy500/700/800 Programmable Relays	**V7-T3-20**
easy802/806 Programmable Relays with SmartWire-DT	**V7-T3-26**
easyRelay and MFD Expansion Modules	**V7-T3-33**
MFD-Titan Multi-Function Displays	
System Overview	**V7-T3-34**
Product Selection	**V7-T3-35**
Accessories	**V7-T3-36**
Technical Data and Specifications	**V7-T3-37**
Dimensions	**V7-T3-38**
easyRelay Communication Modules	**V7-T3-40**
easyRelay Power Supplies, Accessories and Software	**V7-T3-43**

MFD-Titan Multi-Function Displays

Product Description

The MFD-Titan multi-function displays can be used as remote text displays for easy500, easy700, easy800 and easy802/806 relays or can be configured as standalone or networked multi-function displays. As a multi-function display, the MFD-Titan combines the control functions of an easy800 with a door-mounted graphics display.

MFD-Titan multi-function display is comprised of three parts: display, controller and I/O modules. Match each piece to the needs of your application. If you need to both monitor and modify parameters within your application, choose the MFD-80-B display. The preprogrammed and user programmable buttons give you the capability to make small changes to the way your application is running, start or stop a process, or change your program completely. Select a controller with or without easyNet support, and with AC or DC power. Finally, add the MFD I/O module that best suits your application.

MFD-Titan—for controlling small applications that require graphic visualization and for large-scale applications with 20 points, expandable to 40 points locally, and expandable using the easyNet network up to 320 I/O points.

The MFD-Titan display can be linked to the easy500/700/800 models to provide an enhanced text based operator interface.

The easyNet integrated network provides easy and inexpensive linking of up to eight MFD-Titan devices over a distance of up to 1000 meters. Each MFD-Titan device can run its program, or be used as a distributed input/output module. Connect up to eight controllers with up to 40 I/O to obtain 320 I/O.

Standards

- CSA C22.2 No. 142-M1987
- CSA C22.2 No. 213-M1987
- EN 55011
- EN 50178
- EN 61131-2
- IEC EN 61000-4
- IEC 60068-2-6
- IEC 60068-2-27
- UL 508

Certifications

- UL
- CSA
- CE
- CSA Class I, Div. 2, Groups A, B, C, D; Temp. Code T3C
- C-Tick
- GOST-R
- Ukrain-GOST

Shipping Approvals

- Bureau Veritas
- Det Norske Veritas
- Germanischer Lloyd
- Lloyd's Register of Shipping

System Overview

MFD-Titan Multi-Function Display

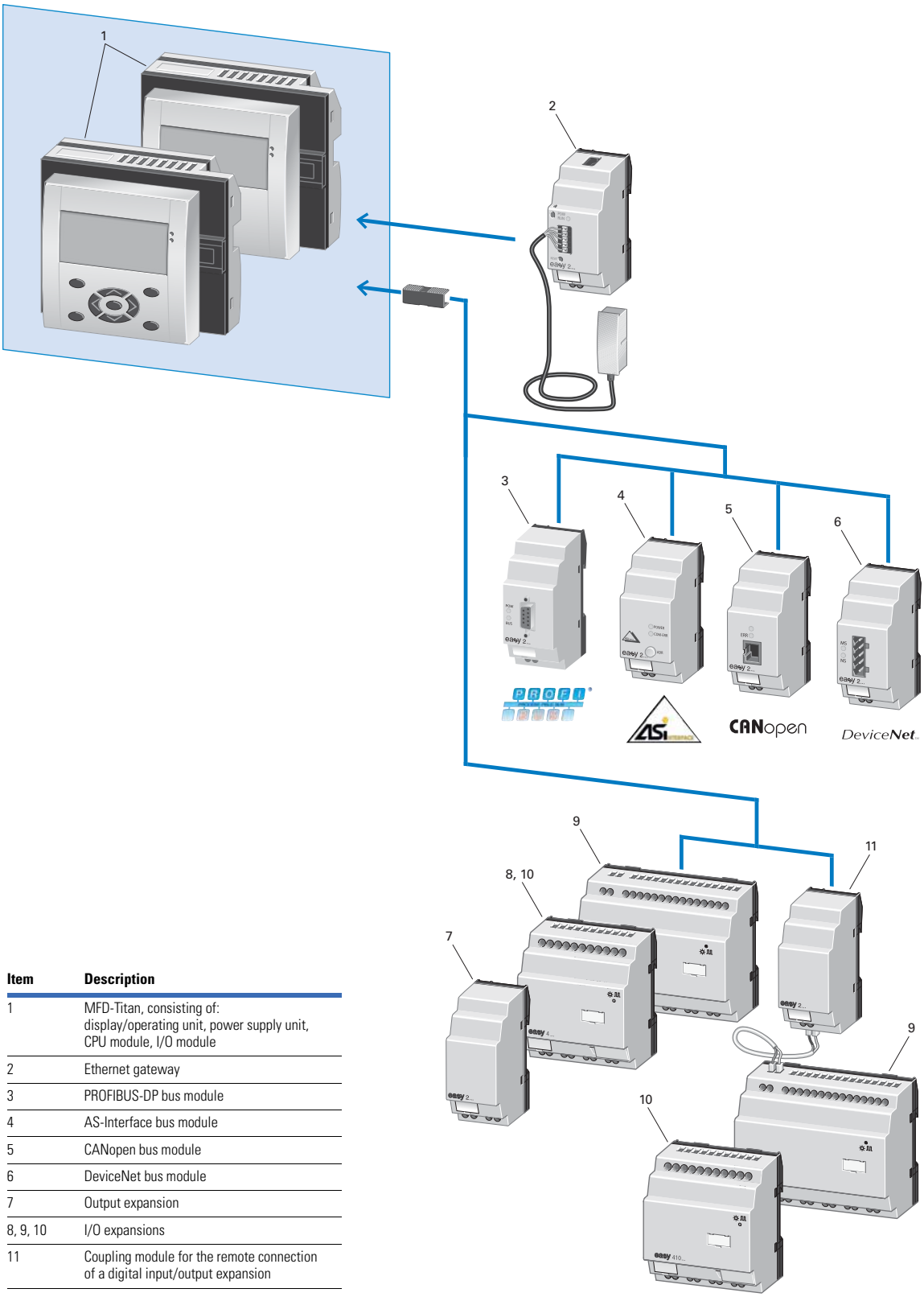

Item	Description
1	MFD-Titan, consisting of: display/operating unit, power supply unit, CPU module, I/O module
2	Ethernet gateway
3	PROFIBUS-DP bus module
4	AS-Interface bus module
5	CANopen bus module
6	DeviceNet bus module
7	Output expansion
8, 9, 10	I/O expansions
11	Coupling module for the remote connection of a digital input/output expansion

Product Selection

MFD-80-B

MFD-Titan Display/Operator Units

Monochrome display 132 x 64 pixels with switchable backlight and removable front frame.

Description	Keypad	Eaton Logo	Custom Engraving	Catalog Number
MFD display, NEMA 4X indoor rated	—	—	—	**MFD-80-X**
MFD display, NEMA 4X indoor rated	—	■	—	**MFD-80**
MFD display, NEMA 4X indoor rated	—	—	■	**MFD-80-ETCH** ①
MFD display with keypad ②	■	—	—	**MFD-80-B-X**
MFD display with keypad ②	■	■	—	**MFD-80-B**
MFD display with keypad ②	—	—	■	**MFD-80-B-ETCH** ①

MFD-CP4

MFD-Titan Text/Graphics Display Power Module

For use with MFD-Titan displays for use as remote text/graphics display.

Supply Voltage	Description	Catalog Number
100–240 Vac	AC power supply / communication module (no cable)	**MFD-AC-CP4**
	AC module for easy500/700 relays and cable MFD-CP4-500-CAB5	**MFD-AC-CP4-500**
	AC module for easy800 relays and cable MFD-CP4-800-CAB5	**MFD-AC-CP4-800**
24 Vdc	DC power supply / communication module (no cable)	**MFD-CP4**
	DC module for easy500/700 relays and cable MFD-CP4-500-CAB5	**MFD-CP4-500**
	DC module for easy800 relays and cable MFD-CP4-800-CAB5	**MFD-CP4-800**

MFD-CP

MFD-Titan Controller Modules

For use with MFD-Titan display/operator units.
Add MFD-Titan I/O modules as needed.

Supply Voltage	Description	Catalog Number
100–240 Vac	Program and screen memory	**MFD-AC-CP8-ME**
	Program and screen memory, with easyNet	**MFD-AC-CP8-NT**
24 Vdc	Program and screen memory	**MFD-CP8-ME**
	Program and screen memory, with easyNet	**MFD-CP8-NT**
	Double program and screen memory (as MFD-CP8)	**MFD-CP10-ME**
	Double program and screen memory (as MFD-CP8), with easyNet	**MFD-CP10-NT**

Notes

① To order an MFD display with custom engraving, a marking file with the required text and/or graphics must be created as a Labeleditor ZIP file. The ZIP file has to be sent to the Eaton factory, and the name of the file must be referenced in the order notes section. To download the Labeleditor configuration software, please visit www.eaton.com/software.

② To obtain a NEMA 4X indoor rating on MFD displays with keypads, use with a protective membrane cover MFD-XM-80.

MFD-R16

MFD-Titan I/O Modules

For use with MFD-Titan controller modules.

Supply Voltage	Description	Inputs Digital	Inputs Analog ①	Outputs Relay	Outputs Transistor	Outputs Analog	Catalog Number
100–240 Vac	16 I/O	12	—	4	—	—	**MFD-AC-R16**
24 Vdc		12	4	4	—	—	**MFD-R16**
		12	4	—	4	—	**MFD-T16**
24 Vdc	17 I/O	12	4	4	—	1	**MFD-RA17**
		12	4	—	4	1	**MFD-TA17**

MFD-TP_

MFD-Titan I/O Modules with Temperature Detection

For use with MFD-CP8-_ ② and MFD-CP10-_ MFD-Titan controller modules.

Supply Voltage	Inputs Digital	Inputs Can Be Used For Analog	Inputs Pt100	Outputs Relay 10 A (UL)	Outputs Transistor	Outputs Analog	Temperature Ranges	Catalog Number
24 Vdc	6	2	2	—	4	—	–40 ° to +90 °C/0 ° to +250 °C/0 ° to +400 °C	**MFD-TP12-PT-A**
	6	2	2	—	4	—	–200 ° to +200 °C/0 ° to +850 °C	**MFD-TP12-PT-B**
	6	2	—	—	4	—	–40 ° to +90 °C/0 ° to +250 °C	**MFD-TP12-NI-A**
	6	2	2	—	4	1	–40 ° to +90 °C/0 ° to +250 °C/0 ° to +400 °C	**MFD-TAP13-PT-A**
	6	2	2	—	4	1	–200 ° to +200 °C/0 ° to +850 °C	**MFD-TAP13-PT-B**
	6	2	—	—	4	1	–40 ° to +90 °C/0 ° to +250 °C	**MFD-TAP13-NI-A**

Accessories

Miscellaneous Parts

Description	Catalog Number
MFD-Titan display protective membrane cover	**MFD-XM-80**
MFD-Titan display protective plastic cover	**MFD-XS-80**
MFD-Titan display DIN rail mount kit	**MFD-TS-144**

Notes

① Analog inputs optional. Use of analog inputs will result in a decrease in the same number of available digital inputs

② Version 8 and higher MFD-CP8_ controllers are compatible with the temperature detection modules.

Technical Data and Specifications

MFD-80, MFD-CP4, MFD-CP8

Type	MFD-80…	MFD-CP4/CP8
Connection cables		
Solid	—	0.2–4.0 mm^2 (AWG 22–12)
Flexible	—	0.2–2.5 mm^2 (AWG 22–12)
Degree of protection	IP65	IP20
RFI suppression	EN 55011, EN 55022 Class B, IEC 61000-6-1, 2, 3, 4	EN 55011, EN 55022 Class B, IEC 61000-6-1, 2, 3, 4
Ambient operating temperature	Clearly legible at –5 °C to +50 °C	–25 °C to +55 °C
Transport and storage temperature	–40 °C to +70 °C	–40 °C to +70 °C
Hazardous location	CSA Class I, Div. 2, Groups A, B, C, D; Temp. Code T3C	CSA Class I, Div. 2, Groups A, B, C, D; Temp. Code T3C

MFD-Titan I/O Modules

Type	MFD-AC-R16	MFD-R16	MFD-RA17	MFD-T16	MFD-TA17
Supply voltage	Supply via MFD-CP8 module	Supply via MFD-CP8 module	Supply via MFD-CP8 module	Supply via MFD-CP8 module	Supply via MFD-CP8 module
Heat dissipation	0.5 W	0.5 W	0.5 W	0.5 W	0.5 W
Continuous current outputs ①	8 A	8 A	8 A	0.5 A	0.5 A
Short-circuit proof with power factor 1	Line protection B16, 600 A	Line protection B16, 600 A	Line protection B16, 600 A	—	—
Short-circuit proof with power factor 0.7…0.7	Line protection B16, 600 A	Line protection B16, 600 A	Line protection B16, 600 A	—	—
Connection cables					
Solid	0.2–4.0 mm^2 (AWG 22–12)	0.2–4.0 mm^2 (AWG 22–12)	0.2–4.0 mm^2 (AWG 22–12)	0.2–4.0 mm^2 (AWG 22–12)	0.2–4.0 mm^2 (AWG 22–12)
Flexible	0.2–2.5 mm^2 (AWG 22–12)	0.2–2.5 mm^2 (AWG 22–12)	0.2–2.5 mm^2 (AWG 22–12)	0.2–2.5 mm^2 (AWG 22–12)	0.2–2.5 mm^2 (AWG 22–12)
Degree of protection	IP20	IP20	IP20	IP20	IP20
RFI suppression	EN 55011, EN 55022 Class B, IEC 61000-6-1,2,3,4				
Ambient operating temperature	–25 °C to +55 °C	–25 °C to +55 °C	–25 °C to +55 °C	–25 °C to +55 °C	–25 °C to +55 °C
Transport and storage temperature	–40 °C to +70 °C	–40 °C to +70 °C	–40 °C to +70 °C	–40 °C to +70 °C	–40 °C to +70 °C
Mounting	Snap fitted to MFD-CP8 module	Snap fitted to MFD-CP8 module	Snap fitted to MFD-CP8 module	Snap fitted to MFD-CP8 module	Snap fitted to MFD-CP8 module

MFD-CP4 and CP8 Communication Modules

Type	MFD-80…	MFD-CP4-…	MFD-CP8…	MFD-AC-CP8…
Supply voltage	Supply from -CP	24 Vdc	24 Vdc	100–240 Vac
Heat dissipation	3 W	1.5 W	3 W	8 VA
Mounting	Front mounting in 2 x 22.5 mm Standard drill holes	Snap fitted to MFD-80	Snap fitted to MFD-80 or on 35 mm DIN rail or screw mounting with ZB4-101-GF1 mounting feet	

Note

① Relay = 8 A with resistive load, 3 A with inductive load.
Transistor outputs = 0.5 A/24 Vdc, maximum four outputs switchable in parallel.

Dimensions

Approximate Dimensions in Inches (mm)

MFD-80 Series, Drawing Number MD05013005E

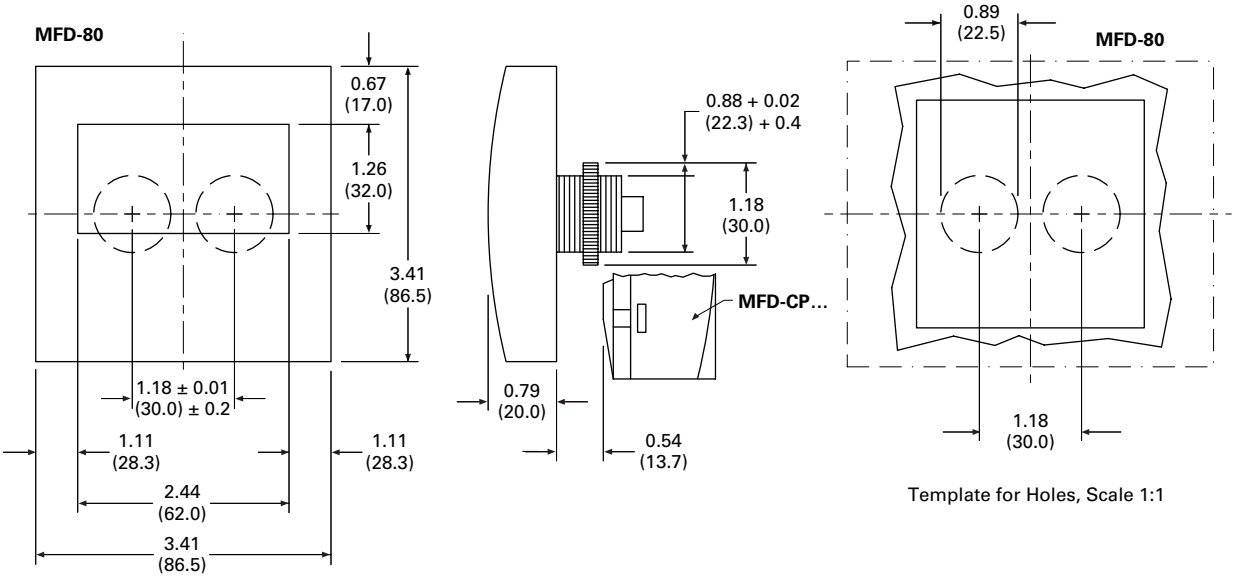

MFD-CP4, MFD-80 and MFD-CP4 Series Combined, Drawing Number MD013013E

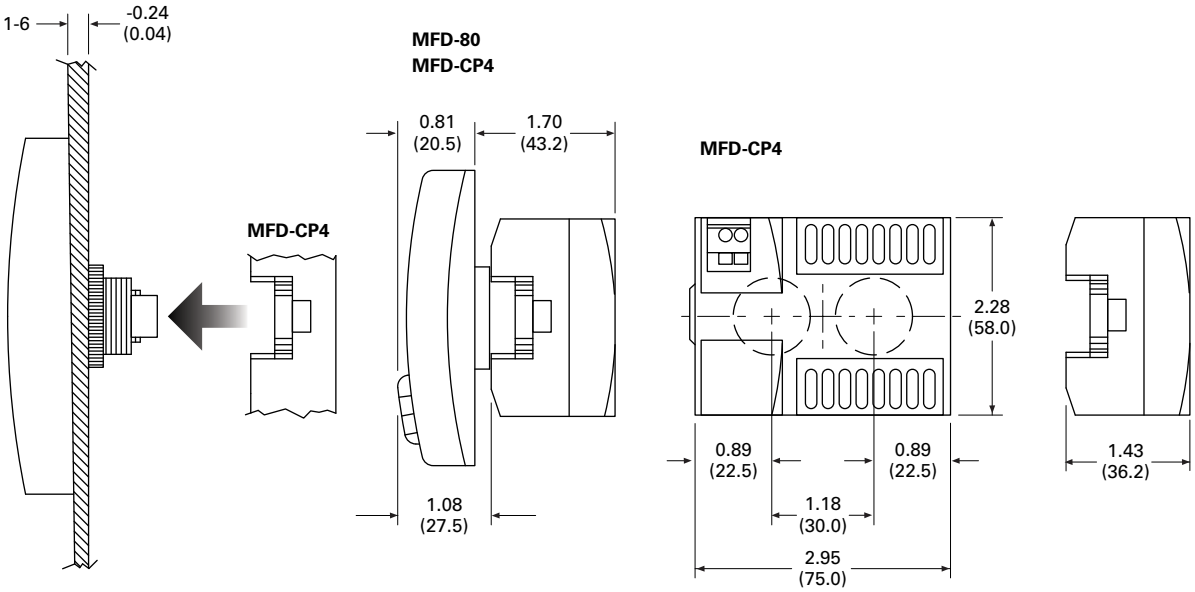

Approximate Dimensions in Inches (mm)

MFD-CP8 Series, Drawing Number MD05013006E

MFD-CP8

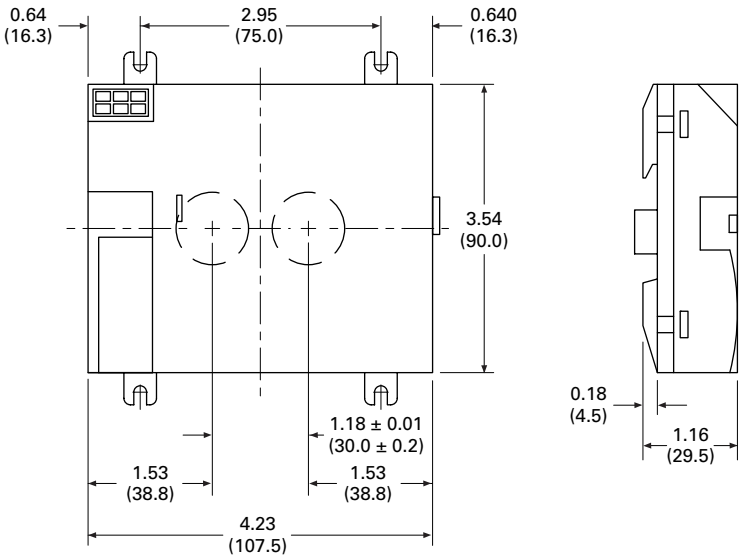

MFD-R/MFD-T I/O Module, Drawing Number MD05013007E

MFD-R and MFD-T I/O

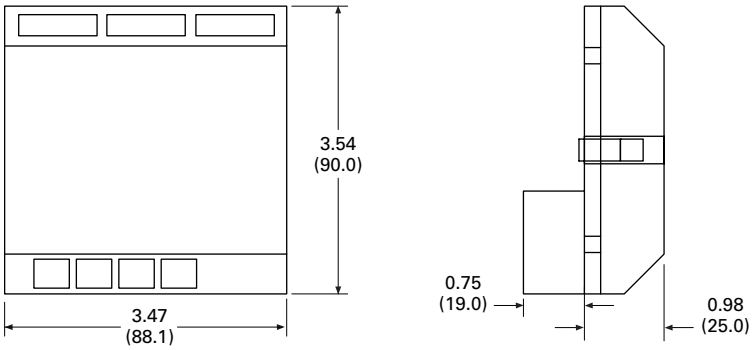

easyRelay Communication Modules

Contents

Description	*Page*
easy500/700/800 Programmable Relays	**V7-T3-20**
easy802/806 Programmable Relays with SmartWire-DT	**V7-T3-26**
easyRelay and MFD Expansion Modules	**V7-T3-33**
MFD-Titan Multi-Function Displays	**V7-T3-33**
easyRelay Communication Modules	
Technical Data and Specifications	**V7-T3-41**
Dimensions	**V7-T3-41**
easyRelay Power Supplies, Accessories and Software	**V7-T3-43**

easyRelay Communication Modules

Product Description

Four network modules are available for easily connecting to world-standard networks. The network modules can be used with the easy700/800 programmable relays and MFD-Titan multi-function displays.

Available communication modules support:

- DeviceNet
- PROFIBUS-DP
- AS-Interface
- CANopen

All modules operate exclusively as nodes on the given network.

Product Selection

The Ethernet gateway connects devices provided with an RS-232 serial interface with the Ethernet network. This gateway can be used with easy500 as well as easy700/800 relays and MFD-Titan displays.

EASY209-SE

Ethernet Gateway Module

Description		Catalog Number
Ethernet gateway	Serial interface easyRelay or MFD-…CP8/CP10_ to Ethernet, for connecting to easyOPC server, easySoft or easyCom	**EASY209-SE** ①

EASY204-DP

Network Interface Modules

Description		Catalog Number
DeviceNet interface module	Addresses available 0 to 63	**EASY222-DN**
PROFIBUS-DP interface module	Device addresses available 1 to 126	**EASY204-DP**
AS-Interface interface module with 4 in and 4 out	Device: 4 inputs, 4 outputs, 4 parameter bits Addresses available 0 to 31	**EASY205-ASI**
CANopen interface module	Addresses available 1 to 127	**EASY221-CO**

Note

① To set up the Ethernet gateway, download the EASY209-SE configuration software at www.eaton.com/easyrelays.

Technical Data and Specifications

easy700/800/MFD Communication Interface Modules
EASY204-DP, EASY205-ASI, EASY221-CO, EASY222-DN, EASY209-SE ①

Description	Specification
Supply voltage	24 Vdc
Heat dissipation ②	1 W
Connection cables	
Solid	0.2–4.0 mm^2 (AWG 22–12)
Flexible	0.2–2.5 mm^2 (AWG 22–12)
Degree of protection	IP20
RFI suppression	EN 55011, EN 55022 Class B, IEC 61000-6-1,2,3,4
Ambient operating temperature	–25 °C to +55 °C
Transport and storage temperature	–40 °C to +70 °C
Certification, standards	EN 50178, IEC/EN 60947, UL, CSA
Mounting	On 35 mm DIN rail or screw mounting with ZB4-101-GF1 mounting feet

Notes

① EASY209-SE is also compatible with easy500 programmable relays.
② EASY204-DP dissipates 2 W.

Dimensions

Approximate Dimensions in Inches (mm)

EASY202-RE/EASY200-EASY/EASY205-ASI/ EASY209-SE Series, Drawing Number MD05013012E

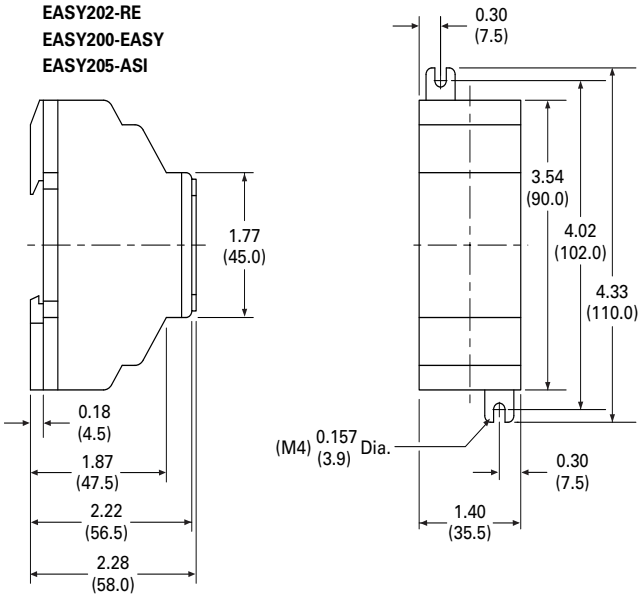

EASY221-CO/EASY222-DN Series, Drawing Number MD05013010E

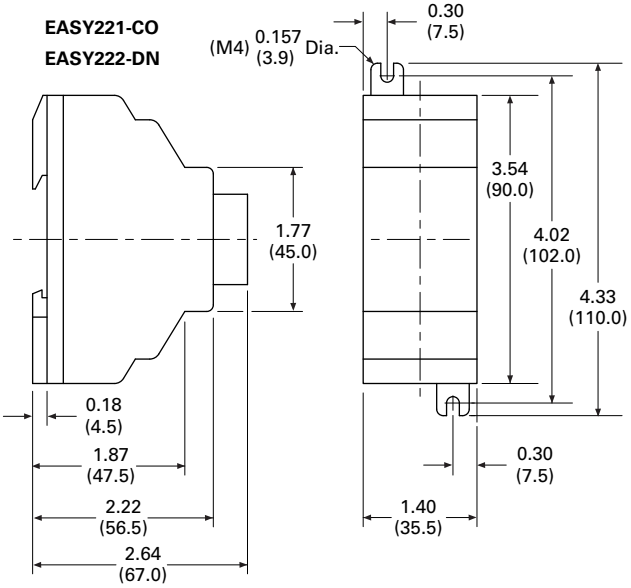

EASY204-DP Series, Drawing Number MD05013011E

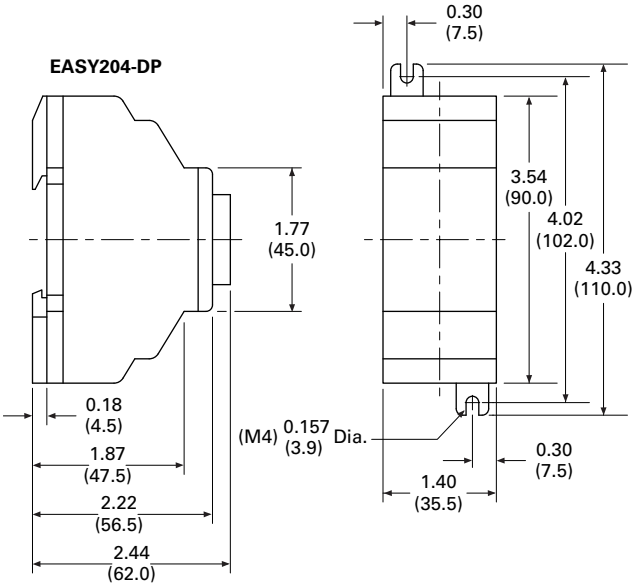

easyRelay Power Supplies, Accessories and Software

Contents

Description	Page
easy500/700/800 Programmable Relays	V7-T3-20
easy802/806 Programmable Relays with SmartWire-DT	V7-T3-26
easyRelay and MFD Expansion Modules	V7-T3-30
MFD-Titan Multi-Function Displays	V7-T3-33
easyRelay Communication Modules	V7-T3-40
easyRelay Power Supplies, Accessories and Software	
Accessories	V7-T3-44
Technical Data and Specifications	V7-T3-46
Wiring Diagram	V7-T3-46
Dimensions	V7-T3-47

easyRelay Power Supplies, Accessories and Software

Product Description

Power Supplies—12 Vdc and 24 Vdc power supplies for applications where only 100–240 Vac is available.

Accessories—Memory modules, cables and other components to complete your automation solutions.

Software—The easySoft software is used to program all of the easyRelays and MFD-Titan displays. The Windows®-based software provides straightforward circuit diagram input and editing and the diagrams can be displayed in the format desired. When easy800 and MFD-Titan controllers are connected using easyNet, all connected devices can be accessed and their programs loaded from a single controller.

easySoft includes an integrated offline simulation tool that allows users to test a circuit diagram before commissioning.

Product Selection

Power supply units are primary switched-mode power supplies that are optimally suited for the easyRelay and easySafety product series in terms of functions and design. The new and high-performance power supply units support safe operation in plants and machines. They are simple and flexible in handling.

Fast diagnosis of the voltage output: continuous light on the LED—fault-free operation; flashing on the LED—short circuit or overload on voltage output.

- Suitable for worldwide use due to wide range input from 85 V to 264 Vac, 50/60 Hz
- Output voltages can be connected in parallel to increase power output or for redundant operation to achieve greater system availability
- Compliance with international standards and approvals

The primary switched-mode power supply units can be used everywhere:

- Safety extra low voltage (SELV to EN 60 950)
- Radio interference Class B to EN 55 011 and EN 55 022 for use in industrial and public networks

EASY...-POW

Power Supply Units

Rated input voltage 100–240 Vac, single-phase.

Input Voltage Range	Rated Output Voltage	Output Voltage Setting Range	Rated Output Power	Rated Output Current	Catalog Number
100–240 Vac	24 Vdc/12 Vdc	—	8 W	0.35 A/20 mA	**EASY200-POW**
	24 Vdc	—	30 W	1.25 A	**EASY400-POW**
	24 Vdc	—	60 W	2.5 A	**EASY500-POW**
	24 Vdc	—	100 W	4.2 A	**EASY600-POW**

Bluetooth Adapter

Conveniently commission and service machines and other equipment remotely.

- Simple communication with easy800 or MFD-Titan from outside loud and/or dangerous areas
- An 8-digit PIN security code prevents unauthorized remote access
- Simple recognition in Windows 7
- Full online functionality with easySoft-Pro V6.91or higher
- Has all necessary radio type approvals for USA, Canada and Europe

EASY800-BLT-ADP

Bluetooth Adapter

Description	Catalog Number
easy800/MFD Bluetooth adapter	**EASY800-BLT-ADP**
The Blue tooth adapter provides wireless connectivity to easySoft-Pro for easy programming download and upload. Use it with the easyRemote Display Android App for simple and fast access to your easy800 relays up to a distance of 10 meters.	

Accessories

easySoft

Programming Software

Description	Catalog Number
Programming software for easy500/700	**EASY-SOFT-BASIC**
Programming software for easy800, easy 802/806 and MFD-Titan includes SWD-Assist for configuration of the SmartWire-DT network	**EASY-SOFT-PRO**

EASY-USB-CAB

Programming Cables

Description	Catalog Number
easy500/700 to PC programming cable—USB	**EASY-USB-CAB**
easy500/700 to PC programming cable—RS-232	**EASY-PC-CAB**
easy800/MFD to PC programming cable—RS-232	**EASY800-PC-CAB**
easy800/MFD to PC programming cable—USB	**EASY800-USB-CAB**
easy802/806 to PC programming cable—USB, 2m	**EU4A-RJ45-USB-CAB1**

MFD-CP4-800-CAB5

EASY800-MO-CAB

Cables and Connectors

Description	Catalog Number
easy500/700 to MFD-CP4 communication cable, 5m	**MFD-CP4-500-CAB5**
easy800 to MFD-CP4 communication cable, 5m	**MFD-CP4-800-CAB5**
easy800 to MFD-CP8 communication cable, 2m	**MFD-800-CAB**
easy800 to MFD-CP8 communication cable, 5m	**MFD-800-CAB5**
easy800 modem, printer, programming cable	**EASY800-MO-CAB**
easy802/806 to MFD-CP4 communication cable, 1.5m	**EU4A-RJ45-CAB2**
easy802/806 to XV HMI communication cable, 2m	**EU4A-RJ45-CAB1**
easy800/MFD easyNet cable, 0.3m networking cable	**EASY-NT-30**
easy800/MFD easyNet cable, 0.8m networking cable	**EASY-NT-80**
easy800/MFD easyNet cable, 1.5m networking cable	**EASY-NT-150**
easy800/MFD easyNet cable (cable only, no connectors, see EASY-NT-RJ45), 100m	**EASY-NT-CAB**
RJ45 network connectors for easyNet cable (EASY-NT-CAB), 10/pack	**EASY-NT-RJ45**
easy800/MFD network termination resistor, 2/pack	**EASY-NT-R**

EASY-M-32K

EASY-M-256K

Memory Storage Modules

Description	Catalog Number
easy500/700 32K memory storage module	**EASY-M-32K**
easy800/MFD 256K memory storage module	**EASY-M-256K**
easy800/MFD 512K memory storage module	**EASY-M-512K**

Panel Window

Mounting Kit

Simulator

Miscellaneous Parts

Description	Catalog Number
easy500 panel window	**SKF-FF4**
easy700/800 panel window	**SKF-FF6**
easy500/700/800 panel window mounting kit to front mount units	**SKF-HA**
High current input adapter, six-channel	**EASY256-HCI**
Base to expander, interface connector	**EASY-LINK-DS**
easy500 relay simulator	**EASY412-DC-SIM-NA**
Mounting feet, 9/pack	**ZB4-101-GF1**
Grounding kit	**ZB4-102-KS1**

Technical Data and Specifications

easyRelay Power Supplies

Type	EASY200-POW	EASY400-POW
Supply voltage	100–240 Vac	100–240 Vac
Maximum range	85–264 Vac	85–264 Vac
Output voltage	24 Vdc (±3%)	24 Vdc (±3%)
Output current (rated value)	0.25 A	1.25 A
Overcurrent limitation form	0.3 A	1.4 A
Short-circuit proof (secondary)	Yes	Yes
Overload proof	Yes	Yes
Potential isolation (prim/sec.)	Yes, SELV, (to EN 600950, VDE 805)	Yes, SELV, (to EN 600950, VDE 805)
Others	Additional output voltage 12 DC, 20 mA	Additional output voltage 12 DC, 20 mA
Connection cables		
Solid	0.2–4.0 mm^2 (AWG 22–12)	0.2–4.0 mm^2 (AWG 22–12)
Flexible	0.2–2.5 mm^2 (AWG 22–12)	0.2–2.5 mm^2 (AWG 22–12)
Degree of protection	IP20	IP20
RFI suppression	EN 55011, EN 55022 Class B, IEC 61000-6-1, 2, 3, 4	EN 55011, EN 55022 Class B, IEC 61000-6-1, 2, 3, 4
Ambient operating temperature	–25 °C to +55 °C	–25 °C to +55 °C
Transport and storage temperature	–40 °C to +70 °C	–40 °C to +70 °C
Mounting	On 35 mm DIN rail or screw mounting with ZB4-101-GF1 mounting feet	

Wiring Diagram

EASY256-HCI

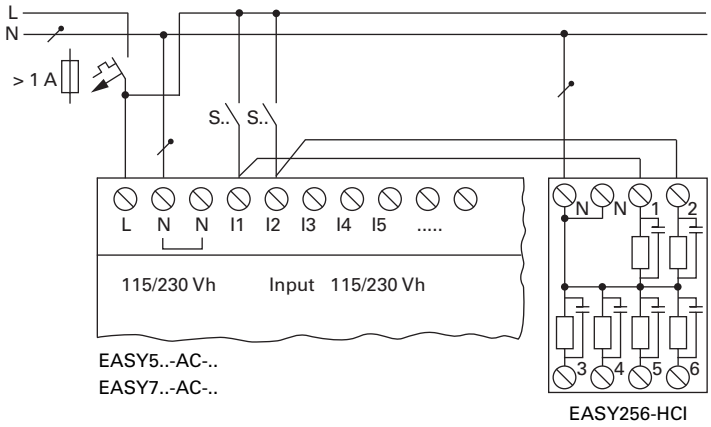

Dimensions

Approximate Dimensions in Inches (mm)

EASY200-POW/EASY256-HCI and EASY400-POW Series, Drawing Number MD05013004E

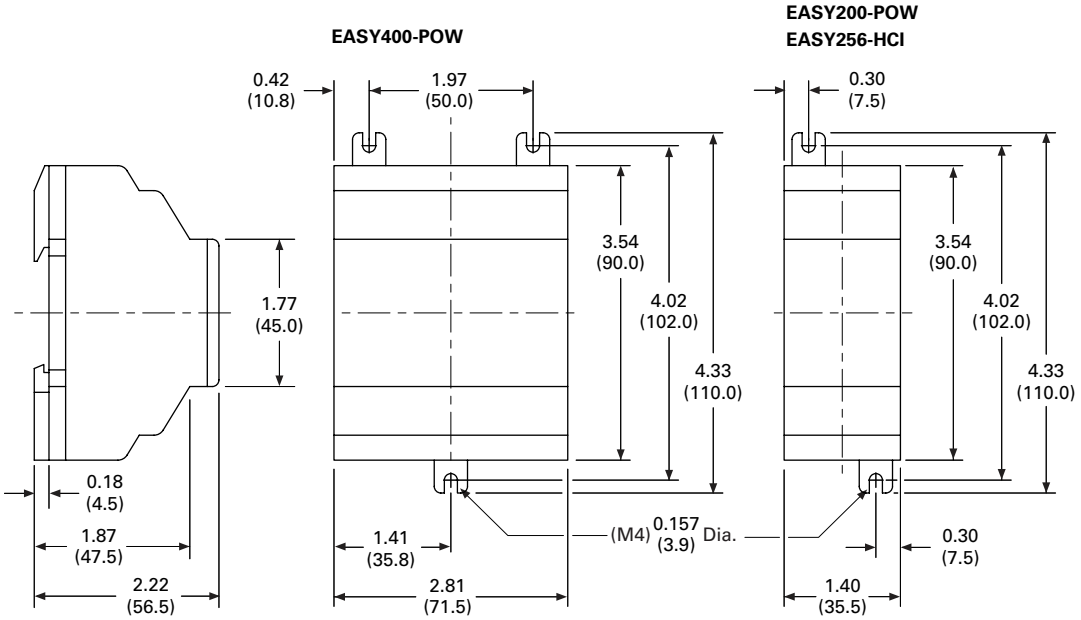

MFD-XS-80 and MFD-XM-80 Series, Drawing Number MD05013009E

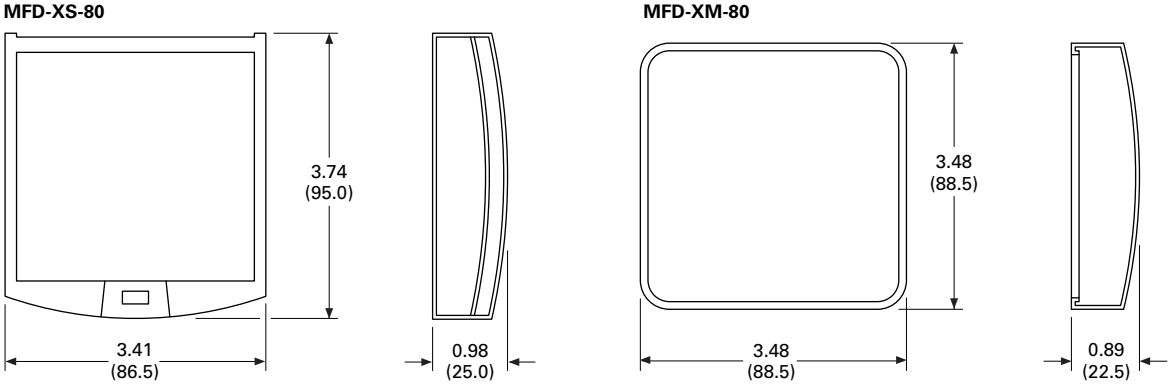

SKF-FF4 and SKF-FF6 Series, Drawing Number MD05013014E

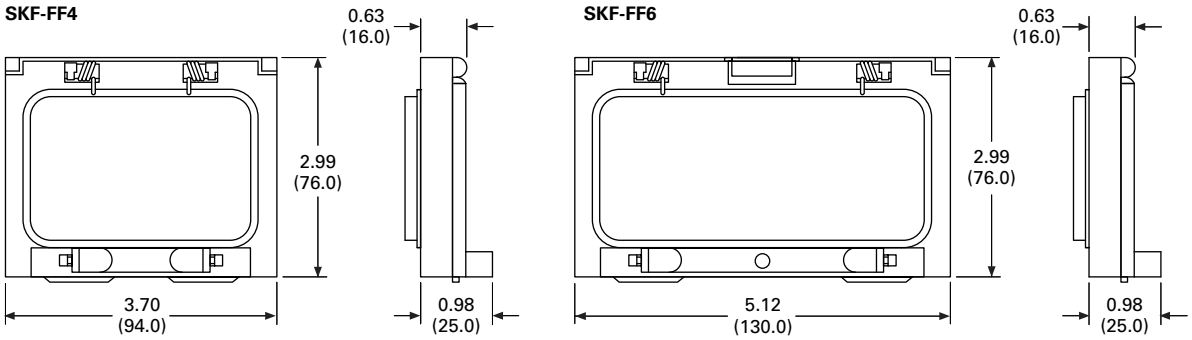

Approximate Dimensions in Inches (mm)

SKF-HA Series, Drawing Number MD05013015E

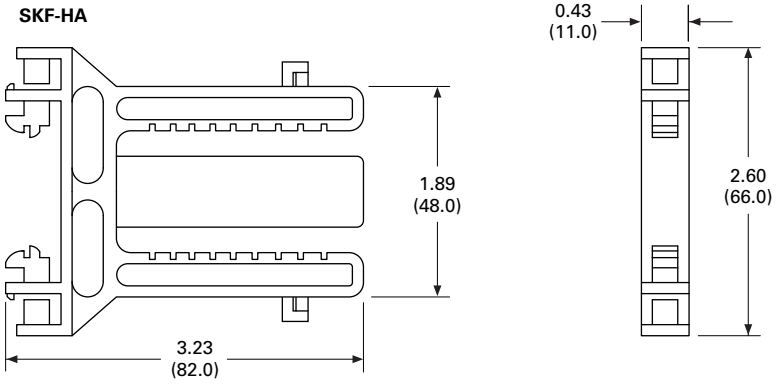

ZB4-101-GF1 Mounting Feet

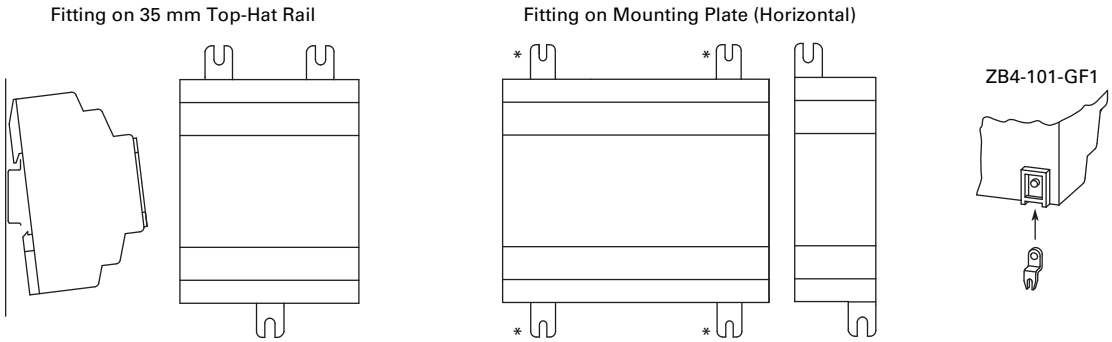

* 3 mounting feet are sufficient

ZB4-102-KS1 Series—Grounding the Screen for Top-Hat Rail

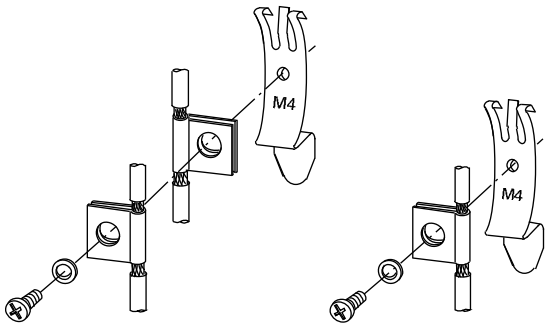

ZB4-102-KS1 Series—Grounding the Screen for Mounting Plate

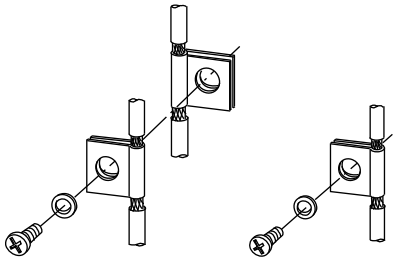

EASY412-DC-SIM-NA Series

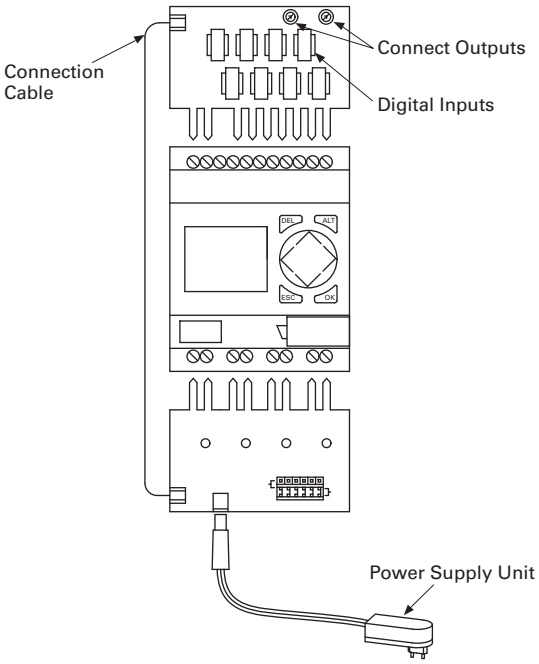

General Purpose Plug-In Relay

Contents

Description	*Page*
D1RR/D1RF Series	**V7-T3-53**
D2RR/D2RF Series	**V7-T3-57**
D3RR/D3RF Series	**V7-T3-67**
D4 Series	**V7-T3-76**
D5RR/D5RF Series	**V7-T3-80**
D7PR/D7PF Series	**V7-T3-89**
D8 Series	**V7-T3-103**
D9 Series	**V7-T3-108**
Accessories	**V7-T3-112**

Product Selection Guide

General Purpose Relay Selection Characteristics

- Current rating: 1 A–30 A
- Contact arrangement: SPDT, DPDT, 3PDT, 4PDT, etc.
- Coil voltage: 6 V–240 Vac/ 6 V–110 Vdc
- Mounting options: socket, flange, DIN rail, panel
- Specifications: CSA, CE, IEC, NEMA, UL, etc.
- Other: physical dimensions, maximum voltage, mechanical/ electrical life, etc.

General Purpose Plug-In Relays

Relay Series	D1RR/D1RF	D2RR/D2RF	D3RR/D3RF
Approvals			
	RoHS COMPLIANT, c UL us, CE, CSA **Note**: UL when used with the appropriate socket.	RoHS COMPLIANT, c UL us, CE, CSA **Note**: UL when used with the appropriate socket.	RoHS COMPLIANT, c UL us, CE, CSA **Note**: UL when used with the appropriate socket.
Features			
	Polycarbonate cover	Polycarbonate cover	Polycarbonate cover
	Indicator lamp and pushbutton available	Indicator lamp and pushbutton available	Indicator lamp and pushbutton available
	Panel and DIN mounting	Panel, DIN and flange mounting	Panel and DIN mounting
		Latching	
Contact Data			
Configuration	**SPDT**	**DPDT** **4PDT**	**DPDT** **3PDT**
Max. allowable load	15 A	12 A 6 A	10 A 10 A 10 A
Material	Silver alloy	Silver alloy	Silver alloy
Dielectric strength between poles	1500 V	1500 V	1500 V
Coil Data			
AC	6 to 240 Vac	6 to 240 Vac	6 to 240 Vac
DC	6 to 110 Vdc	6 to 110 Vdc	6 to 110 Vdc
Power			
VA (Vac)	0.9 VA	1.2 VA	3 VA 1.4 W (D3RR and D3RF)
Watts (Vdc)	0.7 W	0.9 W	—
General Data			
Ambient temperature			
Storage	–40 °F to +185 °F (–40 °C to +85 °C)	–40 °F to +185 °F (–40 °C to +85 °C)	–40 °F to +185 °F (–40 °C to +85 °C)
Operational	–40 °F to +131 °F (–40 °C to +55 °C)	–40 °F to +131 °F (–40 °C to +55 °C)	–40 °F to +131 °F (–40 °C to +55 °C)
Response time	20 milliseconds	20 milliseconds	20 milliseconds
Life			
Mechanical operations	10 million	10 million	5 million (D3RR and D3RF)
Electrical operations	100,000	200,000	100,000
Page Numbers	**V7-T3-53** to **V7-T3-56**	**V7-T3-57** to **V7-T3-66**	**V7-T3-67** to **V7-T3-75**

General Purpose Plug-In Relays, continued

Relay Series	D4	D5RR/D5RF	D7PR/D7PF
Approvals			
	RoHS COMPLIANT, c UL us, CE, CSA	RoHS COMPLIANT, c UL us, CE, CSA **Note**: UL when used with the appropriate socket.	RoHS COMPLIANT, c UL us, CE, CSA **Note**: UL when used with the appropriate socket.
Features			
	Polycarbonate cover	Polycarbonate cover	Polycarbonate cover
	Indicator lamp available	Indicator lamp and pushbutton available	Indicator lamp and pushbutton available
	Panel and DIN mounting	Panel, DIN and flange mounting	Panel and DIN mounting
	Socket has built-in hold-down spring		
Contact Data			
Configuration	**SPDT** / **DPDT**	**DPDT** / **3PDT**	**DPDT** / **3PDT** / **4PDT**
Max. allowable load	10 A at 250 Vac / 5 A at 240 Vac	10 A / 10 A	15 A / 15 A / 15 A
Material	AgCdO	Silver alloy	Silver alloy
Dielectric strength	5000 V	1500 V	1500 V / 2500 V / 2500 V
Coil Data			
AC	6 to 240 Vac	6 to 240 Vac	6 to 240 Vac
DC	6 to 110 Vdc	6 to 110 Vdc	6 to 110 Vdc
Power			
VA (Vac)	0.9 VA	3 VA	1.2 VA / 1.5 VA / 1.5 VA
Watts (Vdc)	0.5 W	1.4 W	0.9 W / 1.4 W / 1.5 W
General Data			
Ambient temperature			
Storage	–40 °F to +158 °F (–40 °C to +70 °C)	–40 °F to +185 °F (–40 °C to +85 °C)	–40 °F to +185 °F (–40 °C to +85 °C)
Operational	–40 °F to +158 °F (–40 °C to +70 °C)	–40 °F to +131 °F (–40 °C to +55 °C)	–40 °F to +131 °F (–40 °C to +55 °C)
Response time	15 milliseconds	20 milliseconds	20 milliseconds (30 milliseconds for latching)
Life			
Mechanical operations	10 million	5 million	10 million
Electrical operations	100,000	100,000	100,000 / 200,000 / 200,000
Page Numbers	**V7-T3-76** to **V7-T3-79**	**V7-T3-80** to **V7-T3-88**	**V7-T3-89** to **V7-T3-102**

General Purpose Plug-In Relays, continued

Relay Series	D8		D9	
Approvals				
Features				
	Dust cover		Dust cover	
	Panel, DIN and flange mounting		Pushbutton available	
	Quick-connect and screw terminals		Panel mounting	
			Screw terminals	
Contact Data				
Configuration			**4PST**	
	SPST-NO	**DPST-NO**	**NO**	**NC**
Max. allowable load	30 A at 220 Vac	25 A at 220 Vac	25 A at 220 Vac	8 A at 220 Vac
Material	AgCdO		AgCdO	
Dielectric strength	4000 V		4000 V	
Coil Data				
AC	6 to 240 Vac		24 to 240 Vac	
DC	12 to 24 Vdc		12 to 110 Vdc	
Power				
VA (Vac)	2.5 VA		2.6 VA	
Watts (Vdc)	1.9 W		2.0 W	
General Data				
Ambient temperature				
Storage	–4 °F to +185 °F (–20 °C to +85 °C)		–13 °F to +140 °F (–25 °C to +60 °C)	
Operational	–4 °F to +131 °F (–20 °C to +55 °C)		–13 °F to +140 °F (–25 °C to +60 °C)	
Response time	30 milliseconds		50 milliseconds	
Life				
Mechanical operations	5 million		1 million	
Electrical operations	100,000		100,000	
Page Numbers	**V7-T3-103** to **V7-T3-107**		**V7-T3-108** to **V7-T3-111**	

D1 Series Relay

Contents

Description	*Page*
D1RR/D1RF Series	
Product Selection	V7-T3-54
Accessories	V7-T3-54
Technical Data and Specifications	V7-T3-55
Wiring Diagram	V7-T3-56
Dimensions	V7-T3-56
D2RR/D2RF Series	V7-T3-57
D3RR/D3RF Series	V7-T3-67
D4 Series	V7-T3-76
D5RR/D5RF Series	V7-T3-80
D7PR/D7PF Series	V7-T3-89
D8 Series	V7-T3-103
D9 Series	V7-T3-108
Accessories	V7-T3-112

D1RR/D1RF Series

Product Description

The D1 Series of relay provides a compact single-pole relay capable of handling 15 A. Multiple feature and voltage options allow for the perfect fit for any application.

Features

D1RR

- Compact relay capable of breaking relatively large load currents
- Panel and DIN rail mounting

D1RF

- The contact operation can be easily checked by Push-to-Test button
- Flag indicator shows relay status in manual or powered condition
- LED status lamp shows coil ON or OFF status—ideal for use in low light applications
- Push-to-Test button allows for manual operation of relay without the need for coil power
- Lock-down door holds pushbutton and contacts in the operate position when activated
- Finger-grip cover allows operator to remove relays from sockets easily
- ID tag/write label to identify relays in multiple-relay circuits
- Bipolar LED allows for reverse polarity applications

Standards and Certifications

RoHS COMPLIANT c UL us CE CSA

UL Listed When used with accompanying Eaton screw terminal socket.

Catalog Number Selection

D1RF/D1RR Series

D1RF 1 A

Family Type
D1RF = Full-featured style ①
D1RR = Plain cover style

Contact Configuration
1 = SPDT

Coil Voltage
A = 120 Vac
A1 = 110 Vdc
B = 240 Vac
R1 = 12 Vdc
T = 24 Vac
T1 = 24 Vdc
W1 = 48 Vdc

Note

① Full-featured, LED test button, flag indicator, lock-down door, finger-grip cover, ID tag.

Product Selection

D1RR/D1RF Relay/Socket Quick Reference

Relay Type	Socket	Clip	Module Type	ID Tag	Jumper
D1RR1	D1RAA	PMC-1781	B	—	—
D1RF1	D1RAA	PMC-1781	B	—	—

D1RF Series Relay

D1RR/D1RF Series

Coil Voltage	Contact Configuration	Coil Resistance (Ohms)	Catalog Number
Full Featured			
12 Vdc	SPDT	188	**D1RF1R1**
24 Vac 50/60 Hz	SPDT	180	**D1RF1T**
24 Vdc	SPDT	750	**D1RF1T1**
110 Vdc	SPDT	13,800	**D1RF1A1**
120 Vac 50/60 Hz	SPDT	4430	**D1RF1A**
240 Vac 50/60 Hz	SPDT	15,720	**D1RF1B**
Plain Cover			
12 Vdc	SPDT	188	**D1RR1R1**
24 Vdc	SPDT	750	**D1RR1T1**
48 Vdc	SPDT	2600	**D1RR1W1**
110 Vdc	SPDT	13,800	**D1RR1A1**
120 Vac 50/60 Hz	SPDT	4430	**D1RR1A**
240 Vac	SPDT	15,270	**D1RR1B**

Accessories

D1RR/D1RF Sockets and Accessories

Type	Module Size	Nominal Voltage (Max. for Sockets)	Nominal Current	Mounting Style	Wire Size	Wire Connection	Standard Pack	Catalog Number
Socket	B	300	20	Panel/DIN rail	12 /14 (2) AWG, 4 /2.5 (2) mm^2	Screw clamping	10	**D1RAA** ①
Flange mount adapter	—	—	—	Flange	—	—	25	**PFC-D11**
Metal spring clip	—	—	—	—	—	—	25	**PMC-1781**
Protection diode	B	6 to 250 Vdc	—	—	—	—	20	**MOD-BD250**
LED indicator	B	24 Vac/Vdc	—	—	—	—	20	**MOD-BLG24**
	B	120/240 Vac/Vdc	—	—	—	—	20	**MOD-BLG240**
MOV suppressor	B	120 Vac/Vdc	—	—	—	—	20	**MOD-BMV120**
	B	24 Vac/Vdc	—	—	—	—	20	**MOD-BMV24**
	B	240 Vac/Vdc	—	—	—	—	20	**MOD-BMV240**
Plastic DIN rail end stop	—	—	—	—	—	—	25	**PFP-P**

Note

① Protection Category (Finger Safe), EN 60529: IP20.

Technical Data and Specifications

D1RF/D1RR Relay Specifications

Description	D1RR	D1RF
Contact Characteristics		
Contact rating	15 A	15 A
Terminal style	Plug-in	Plug-in
Contact materials	Silver alloy	Silver alloy
Maximum switching voltage	300 V	300 V
Switching current at voltage—resistive	20 A at 120 Vac 50/60 Hz	20 A at 120 Vac 50/60 Hz
	20 A at 277 Vac 50/60 Hz	20 A at 277 Vac 50/60 Hz
	20 A at 28 Vdc	20 A at 28 Vdc
Switching current at voltage	1/2 hp at 120 Vac	1/2 hp at 120 Vac
	1 hp at 277 Vac	1 hp at 277 Vac
Pilot duty	B300	B300
Minimum switching requirement	100 mA at 5 Vdc (0.5 W)	100 mA at 5 Vdc (0.5 W)
Coil Characteristics		
Operating range		
% of nominal (AC)	85 to 110%	85 to 110%
% of nominal (DC)	80 to 110%	80 to 110%
Average consumption	0.9 VA	0.9 VA
	0.7 W	0.7 W
Dropout voltage threshold	15% (AC)	15% (AC)
	10% (DC)	10% (DC)
Performance		
Electrical life (UL 508) operations at rated current	100,000 operations	100,000 operations
Mechanical life operations unpowered	10,000,000 operations	10,000,000 operations
Response time	20 ms	20 ms
Dielectric strength		
Between coil and contact Vac (rms)	2500 V (rms)	2500 V (rms)
Between poles Vac (rms)	1500 V (rms)	1500 V (rms)
Environment		
Ambient air temperature around the device		
Storage	–40 °F to +131 °F (–40 °C to +55ºC)	–40 °F to +131 °F (–40 °C to +55 °C)
Operation	–40 °F to +185 °F (–40 °C to +85ºC)	–40 °F to +185 °F (–40 °C to +85 °C)
Vibration resistance—operational	3 g-n at 10–55 Hz	3 g-n at 10–55 Hz
Shock resistance	10 g-n	10 g-n
Degree of protection	IP40	IP40
Features		
Cover options	Plain cover	Full featured
Features	Mechanical flag indicator (optional LED)	Locking pushbutton/ Bipolar LED/ Removable ID tag/ Mechanical flag indicator
Product certifications	RoHS/UL/CE/CSA	RoHS/UL/CE/CSA

Wiring Diagram

D1RF/D1RR

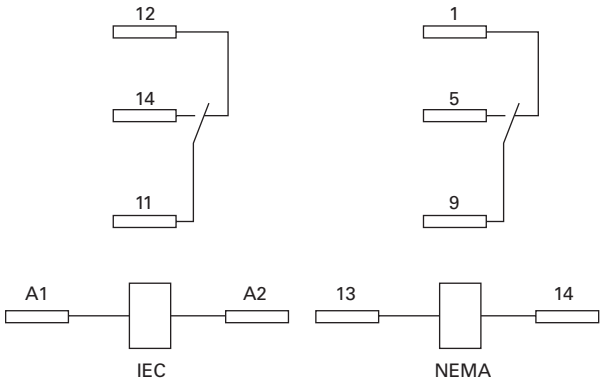

Dimensions

Approximate Dimensions in Inches (mm)

D1RF/D1RR

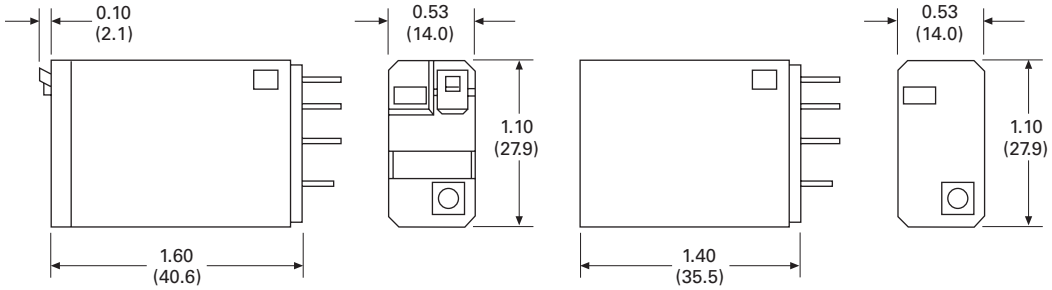

D1RAA

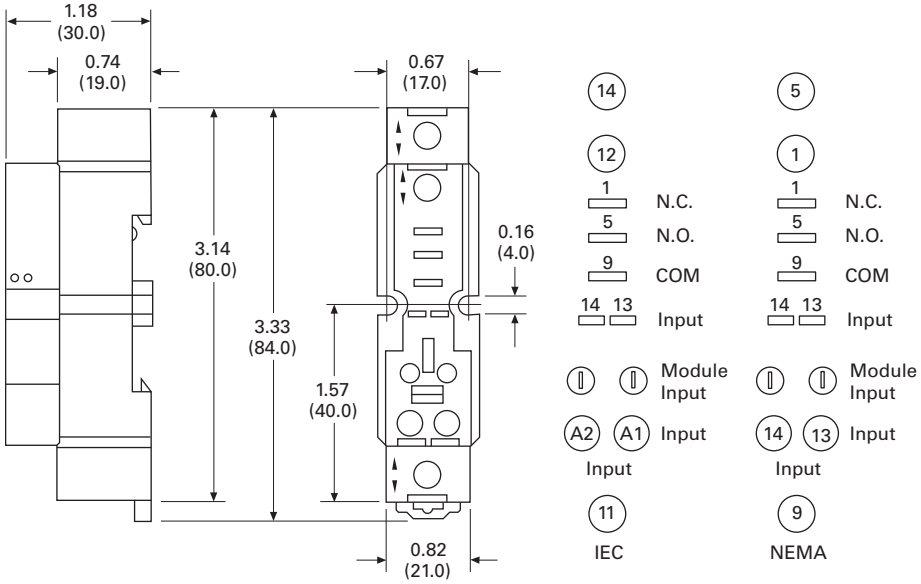

D2 Series Relay

Contents

Description	*Page*
D1RR/D1RF Series	**V7-T3-53**
D2RR/D2RF Series	
Catalog Number Selection	**V7-T3-58**
Product Selection	**V7-T3-58**
Accessories	**V7-T3-60**
Technical Data and Specifications	**V7-T3-61**
Wiring Diagrams	**V7-T3-62**
Dimensions	**V7-T3-63**
D3RR/D3RF Series	**V7-T3-67**
D4 Series	**V7-T3-76**
D5RR/D5RF Series	**V7-T3-80**
D7PR/D7PF Series	**V7-T3-89**
D8 Series	**V7-T3-103**
D9 Series	**V7-T3-108**
Accessories	**V7-T3-112**

D2RR/D2RF Series

Product Description

The D2 Series is a compact line of relays with quick response time and long life. Available in DPDT and 4PDT configurations.

Features

D2RR

- Ultra-high sensitivity relay with quick response
- High reliability, long life
- Panel, DIN rail and flange mounting
- Small size

D2RF

- Flag indicator shows relay status in manual or powered condition
- Bipolar LED status lamp allows for reverse polarity applications
  - Shows coil ON or OFF status
  - Ideal in low light conditions
- Color-coded pushbutton identifies AC coils with red or DC coils with blue pushbuttons
  - Allows for manual operation of relay without the need for coil power
  - Ideal for field service personnel to test control circuits
- Lock-down door, when activated, holds pushbutton and contacts in the operate position
  - Excellent for analyzing circuit problems
- Finger-grip cover allows operator to remove relays from sockets more easily than conventional relays
- White plastic ID tag/write label used for identification of relays in multi-relay circuits

Standards and Certifications

RoHS COMPLIANT c UL us CE CSA

UL Listed When used with accompanying Eaton screw terminal socket.

Catalog Number Selection

D2RF/D2RR ①

D2RF 2 A

Family Type
D2RF = Full-featured style ②
D2RR = Plain cover style

Contact Configuration
2 = DPDT
4 = 4PDT

Coil Voltage
A = 120 Vac
A1 = 110 Vdc
B = 240 Vac
R1 = 12 Vdc
T = 24 Vac
T1 = 24 Vdc
W1 = 48 Vdc

Product Selection

D2RF/D2RR Relay/Socket Quick Reference

Relay Type	Socket	Clip	Module Type	ID Tag	Jumper
D2RR2, D2RF2	D2PAL	PWC-D24	B	PWF-D2P	D2PJ1
		PQC-1782	—	—	—
	D2PA6	PQC-1342	None	—	—
D2RR4, D2RF4	D2PAP	PWC-D24	B	PWF-D2P	D2PJ1
		PQC-1782	—	—	—
	D2PA7	PWC-D24	B	—	—
		PQC-1782	B	—	—
	D2PA6	PQC-1342	None	—	—

Notes

① For deciphering catalog numbers. Do not use for ordering as not all combinations are readily available.

② Full-featured, LED test button, flag indicator, lock-down door, finger-grip cover, ID tag.

D2RF Series Relay

D2RF/D2RR Series

Coil Voltage	Contact Configuration	Coil Resistance (Ohms)	Catalog Number
Full Featured Style			
12 Vdc	DPDT	160	**D2RF2R1**
24 Vac	DPDT	180	**D2RF2T**
24 Vdc	DPDT	650	**D2RF2T1**
48 Vdc	DPDT	2600	**D2RF2W1**
110/125 Vdc	DPDT	11,000	**D2RF2A1**
120 Vac	DPDT	4430	**D2RF2A**
220/240 Vac	DPDT	15,720	**D2RF2B**
12 Vdc	4PDT	160	**D2RF4R1**
24 Vac	4PDT	180	**D2RF4T**
24 Vdc	4PDT	650	**D2RF4T1**
48 Vdc	4PDT	2600	**D2RF4W1**
110/125 Vdc	4PDT	11,000	**D2RF4A1**
120 Vac	4PDT	4430	**D2RF4A**
220/240 Vac	4PDT	15,720	**D2RF4B**
Plain Cover Style			
12 Vdc	DPDT	160	**D2RR2R1**
24 Vac	DPDT	180	**D2RR2T**
24 Vdc	DPDT	650	**D2RR2T1**
120 Vac	DPDT	4430	**D2RR2A**
220/240 Vac	DPDT	15,720	**D2RR2B**
12 Vdc	4PDT	160	**D2RR4R1**
24 Vac	4PDT	180	**D2RR4T**
24 Vdc	4PDT	650	**D2RR4T1**
110/125 Vdc	4PDT	11,000	**D2RR4A1**
120 Vac	4PDT	4430	**D2RR4A**
220/240 Vac	4PDT	15,720	**D2RR4B**

Accessories

D2RF/D2RR Sockets and Accessories

Type	Module Size	Nominal Voltage (Max. for Sockets)	Nominal Current	Mounting Style	Wire Size	Wire Connection	Standard Pack	Catalog Number
Socket	B	300	12	DIN rail/panel	14/16 (2) AWG, 2.5/1.5 (2) mm^2	Elevator	1	**D2PAL** ①
	None	300	10	DIN rail/panel	12/14 (2) AWG, 4/2.5 (2) mm^2	Screw clamping	10	**D2PA6**
	B	300	10	DIN rail/panel	14/16 (2) AWG, 2.5/1.5 (2) mm^2	Elevator	1	**D2PAP** ①
	B	300	10	DIN rail/panel	12/14 (2) AWG, 4/2.5 (2) mm^2	Screw clamping	10	**D2PA7** ①
	None	300	10	DIN rail/panel	12/14 (2) AWG, 4/2.5 (2) mm^2	Screw clamping	5	**D2PA4**
Flange mount adapter	—	—	—	Flange	—	—	25	**PFC-D2D72**
Plastic ejector clip	—	—	—	—	—	—	10	**PWC-D24**
Metal spring clip	—	—	—	—	—	—	25	**PQC-1782**
	—	—	—	—	—	—	25	**PQC-1342**
Hold-down spring	—	—	—	—	—	—	100	**PYC-A1**
Protection diode	B	6 to 250 Vdc	—	—	—	—	20	**MOD-BD250**
LED indicator	B	24 Vac/Vdc	—	—	—	—	20	**MOD-BLG24**
	B	120/240 Vac/Vdc	—	—	—	—	20	**MOD-BLG240**
MOV suppressor	B	120 Vac/Vdc	—	—	—	—	20	**MOD-BMV120**
	B	24 Vac/Vdc	—	—	—	—	20	**MOD-BMV24**
	B	240 Vac/Vdc	—	—	—	—	20	**MOD-BMV240**
Coil bus jumpers	—	—	—	—	—	—	10	**D2PJ1**
Plastic DIN rail end stop	—	—	—	—	—	—	25	**PFP-P**

Note

① Protection category (finger safe), EN 60529: IP20.

Technical Data and Specifications

D2RF/D2RR Relay Specifications

Description	D2RR2/D2RR4	D2RF
Contact Characteristics		
Contact rating	12 A / 6 A	6 A
Terminal style	Plug-in	Plug-in
Contact materials	Silver alloy	Silver alloy
Maximum switching voltage	300 V	300 V
Switching current at voltage—resistive	10 A at 120 Vac 50/60 Hz	10 A at 277 Vac 50/60 Hz
	8 A at 277 Vac 50/60 Hz	8 A at 120 Vac 50/60 Hz
	8 A at 28 Vdc	8 A at 28 Vdc
Switching current at voltage	1/3 hp at 120 Vac 1 hp at 277 Vac	1/3 hp at 120 Vac 1 hp at 277 Vac
Pilot duty	B300	B300
Minimum switching requirement	100 mA at 5 Vdc (0.5 W)	100 mA at 5 Vdc (0.5 W)
Coil Characteristics		
Operating range		
% of nominal (AC)	85 to 110%	85 to 110%
% of nominal (DC)	80 to 110%	80 to 110%
Average consumption	1.2 VA	1.2 VA
	0.9 W	0.9 W
Dropout voltage threshold	15% (AC)	15% (AC)
	10% (DC)	10% (DC)
Performance		
Electrical life (UL 508) operations at rated current	200,000	200,000
Mechanical life operations unpowered	10,000,000	10,000,000
Response time	20 ms	20 ms
Dielectric strength		
Between coil and contact Vac (rms)	1500 rms	1500 rms
Between poles Vac (rms)	1500 rms	1500 rms
Environment		
Ambient air temperature around the device		
Operation	–40 °F to +131 °F (–40 °C to +55 °C)	–40 °F to +131 °F (–40 °C to +55 °C)
Storage	–40 °F to +185 °F (–40 °C to +85 °C)	–40 °F to +185 °F (–40 °C to +85 °C)
Vibration resistance—operational	3 g-n at 10–55 Hz	3 g-n at 10–55 Hz
Shock resistance	10 g-n	10 g-n
Degree of protection	IP40	IP40
Features		
Cover options	Plain cover	Full featured
Features	Mechanical flag indicator	Locking pushbutton/ Bipolar LED/ Removable ID tag/ Mechanical flag indicator
Product certifications	RoHS/UL/CE/CSA	RoHS/UL/CE/CSA

Wiring Diagrams

D2RF2/D2RR2

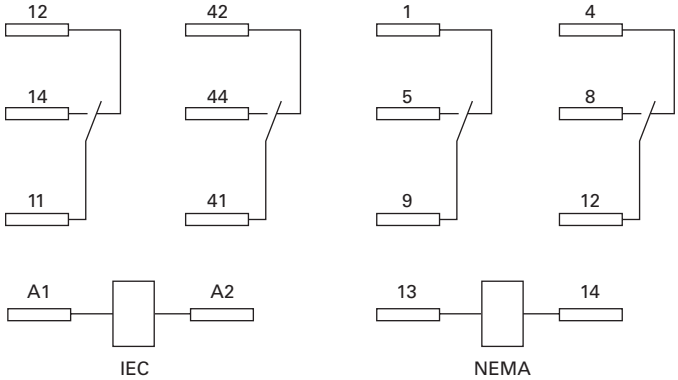

D2RF4/D2RR4

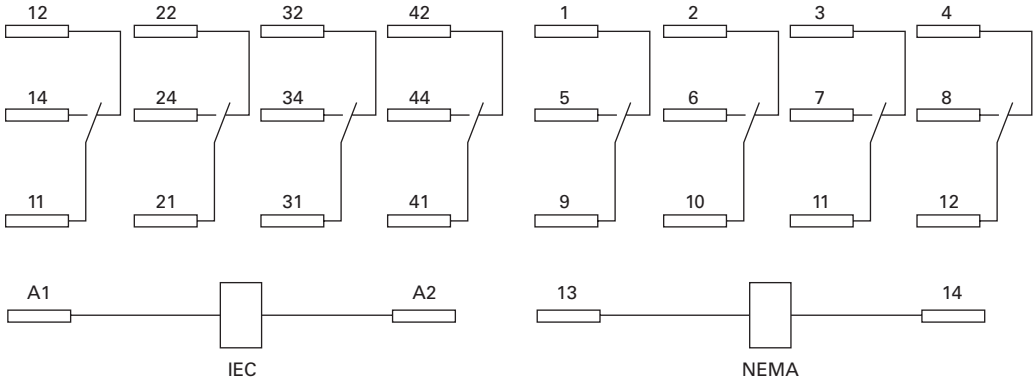

Dimensions

Approximate Dimensions in Inches (mm)

D2RF2/D2RR2

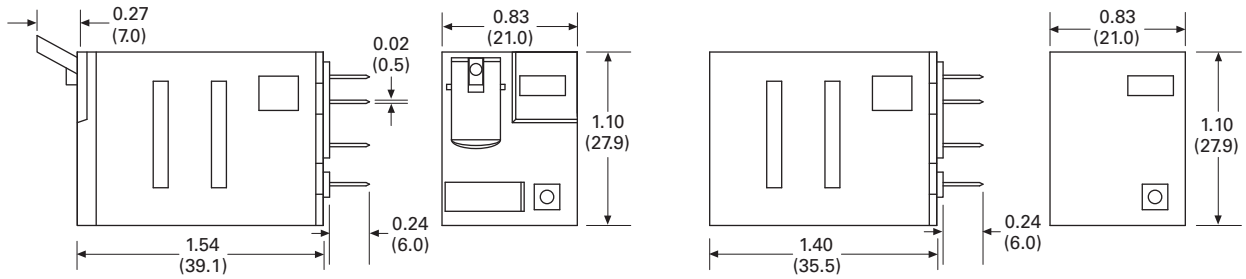

D2RF4/D2RR4

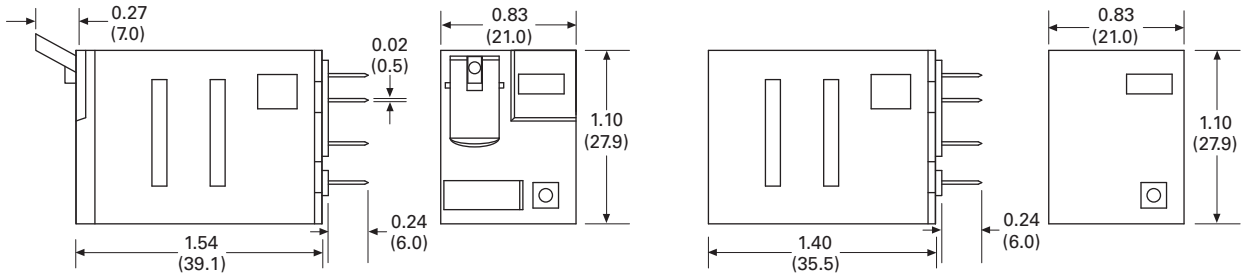

D2PA6

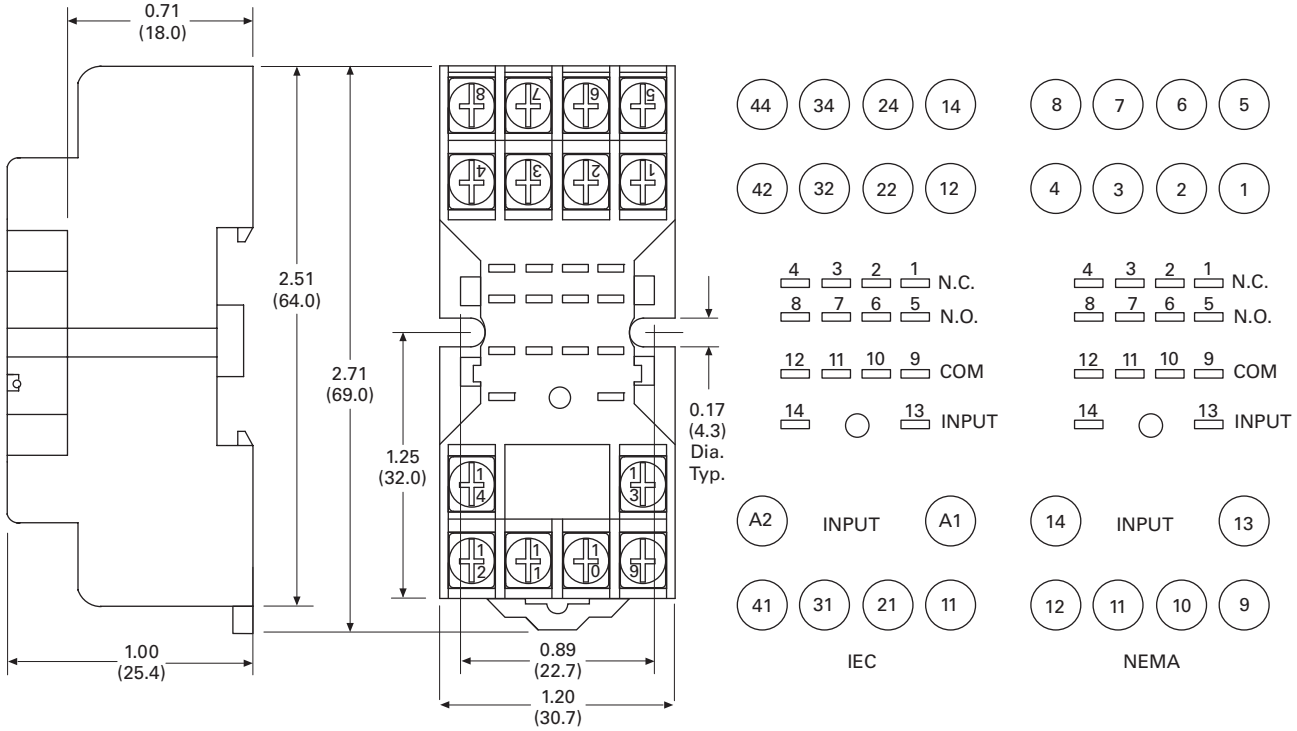

Approximate Dimensions in Inches (mm)

D2PA7

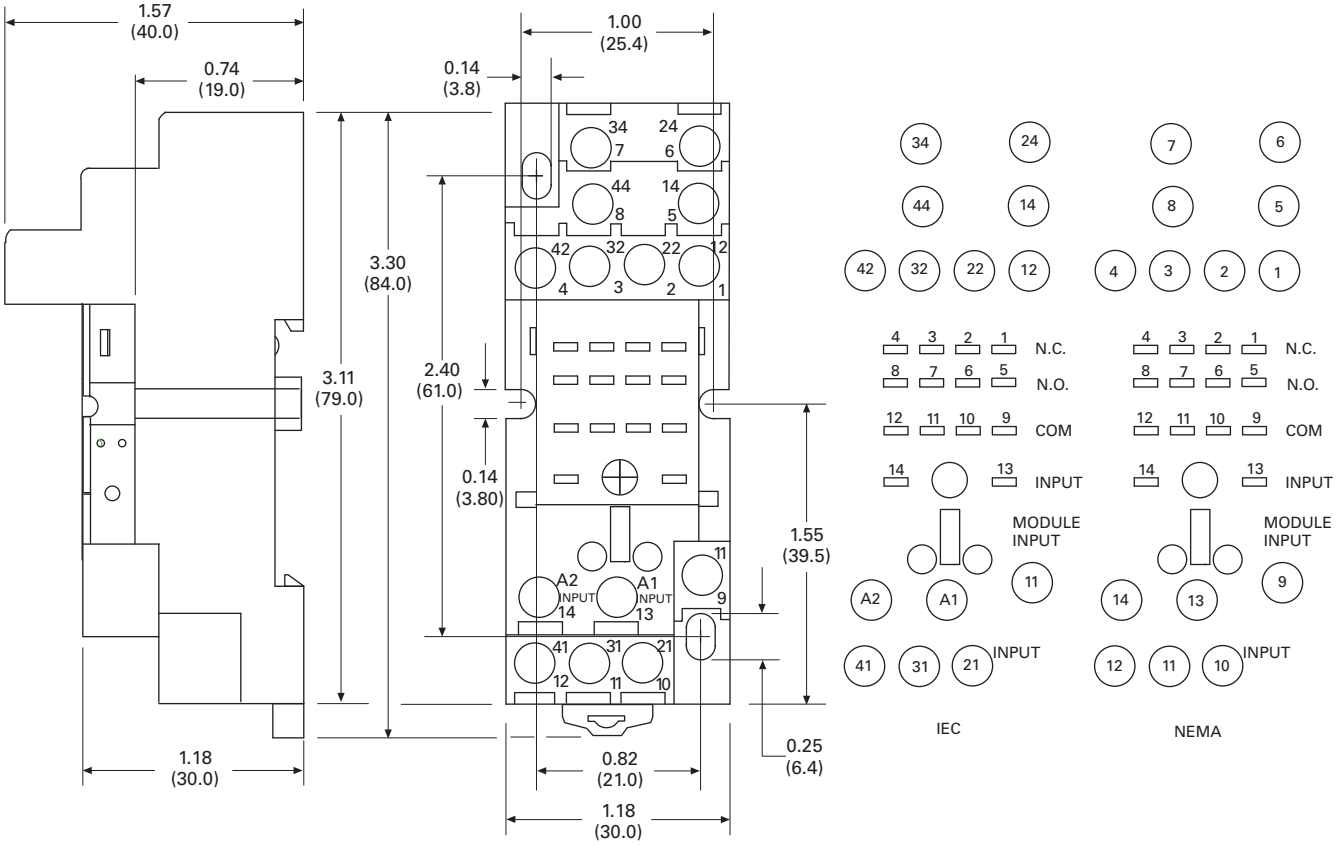

Approximate Dimensions in Inches (mm)

D2PAP

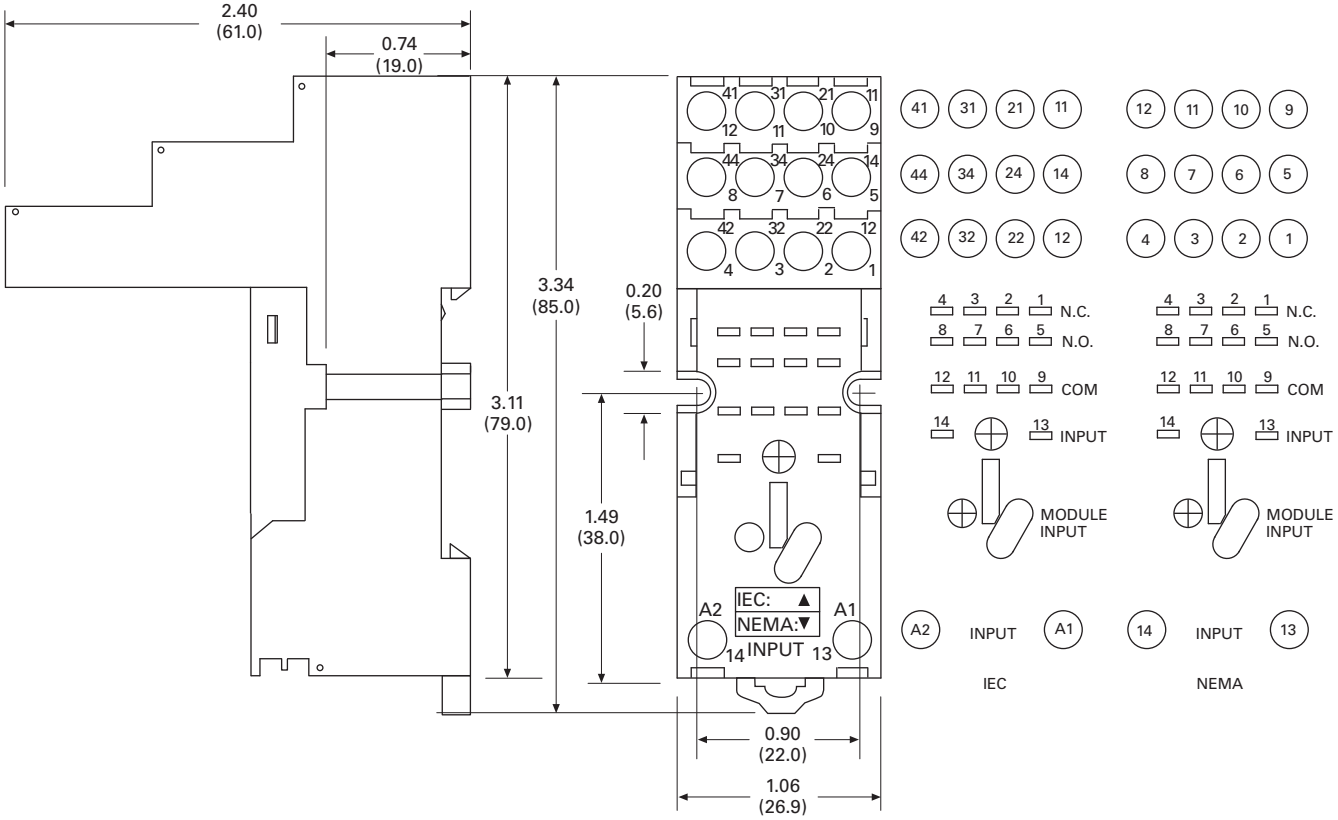

Approximate Dimensions in Inches (mm)

D2PAL

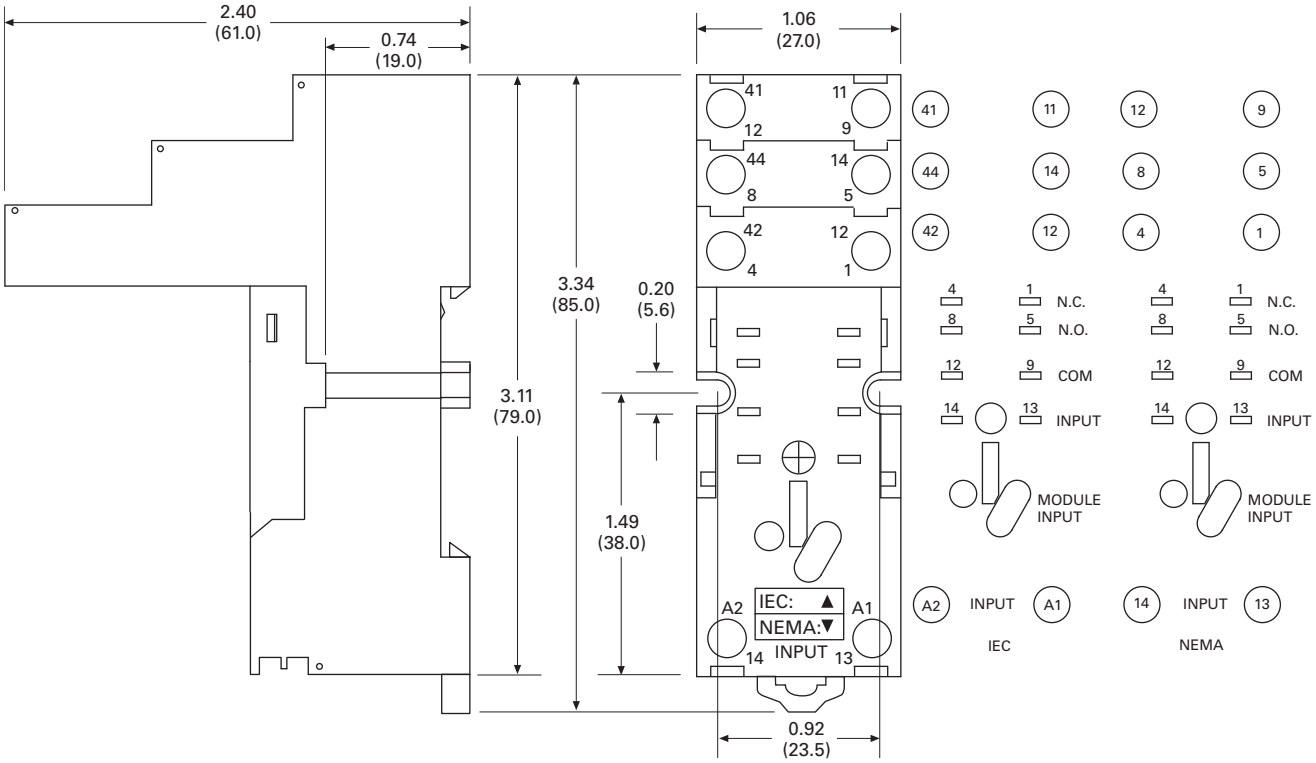

D3 Series Relay

Contents

Description	*Page*
D1RR/D1RF Series	**V7-T3-53**
D2RR/D2RF Series	**V7-T3-57**
D3RR/D3RF Series	
Catalog Number Selection	**V7-T3-68**
Product Selection	**V7-T3-68**
Accessories	**V7-T3-70**
Technical Data and Specifications	**V7-T3-71**
Dimensions	**V7-T3-72**
D4 Series	**V7-T3-76**
D5RR/D5RF Series	**V7-T3-80**
D7PR/D7PF Series	**V7-T3-89**
D8 Series	**V7-T3-103**
D9 Series	**V7-T3-108**
Accessories	**V7-T3-112**

D3RR/D3RF Series

Product Description

The D3 Series of relays provides excellent functionality in a popular octal base design. Rigid pins and guide allow for quick and easy installation with little risk of damage.

Features

D3RR

- Compact relay capable of breaking relatively large load currents
- Panel and DIN rail mounting
- 8- or 11-pin octal plug-in

D3RF

- The contact operation can be easily checked by Push-to-Test button
- Flag indicator shows relay status in manual or powered condition
- LED status lamp shows coil ON or OFF status—ideal for use in low light applications
- Push-to-Test button allows for manual operation of relay without the need for coil power
- Lock-down door holds pushbutton and contacts in the operate position when activated
- Finger-grip cover allows operator to remove relays from sockets easily
- ID tag/write label to identify relays in multiple-relay circuits
- Bipolar LED allows for reverse polarity applications

Standards and Certifications

RoHS COMPLIANT

UL Listed — When used with accompanying Eaton screw terminal socket (for D3RF only)

Catalog Number Selection

D3RR/D3RF Series ①

D 3 R R 2 1

Family Type
D3RR = Standard relay
D3RF = Full featured relay

Contact Configuration
2 = DPDT (8-pin)
3 = 3PDT (11-pin)

Coil Voltage
A = 120 Vac
A1 = 110 Vdc
B = 240 Vac
R1 = 12 Vdc
T = 24 Vac
T1 = 24 Vdc
W1 = 48 Vdc

Product Selection

D3 Relay/Socket Quick Reference

Relay Type	Socket	Clip	Module Type	ID Tag	Jumper
D3RR2, D3RF2	D3PA6	PQC-1332	A	—	D3PJ1
	D3PAL8	PQC-1351	A	PWF-D3D5	—
	D3PA2	PQC-1351	None	—	—
D3RR3, D3RF3	D3PA7	PQC-1332	A	—	D3PJ1
	D3PAL11	PQC-1351	A	PWF-D3D5	—
	D3PA3	PQC-1351	None	—	—

Notes

① For deciphering catalog numbers. Do not use for ordering as not all combinations are readily available.

D3 Series Relay

D3RR/D3RF Series

Coil Voltage	Contact Configuration	Coil Resistance (Ohms)	Catalog Number
Full Featured Style			
120 Vac	DPDT	1700	**D3RF2A**
240 Vac	DPDT	7200	**D3RF2B**
12 Vdc	DPDT	120	**D3RF2R1**
24 Vdc	DPDT	470	**D3RF2T1**
120 Vac	3PDT	1700	**D3RF3A**
220/240 Vac	3PDT	7200	**D3RF3B**
24 Vac	3PDT	72	**D3RF3T**
24 Vdc	3PDT	470	**D3RF3T1**
Plain Cover Style			
120 Vac	DPDT	1700	**D3RR2A**
110/125 Vdc	DPDT	10,000	**D3RR2A1**
220/240 Vac	DPDT	7200	**D3RR2B**
12 Vdc	DPDT	120	**D3RR2R1**
24 Vac	DPDT	72	**D3RR2T**
24 Vdc	DPDT	470	**D3RR2T1**
48 Vdc	DPDT	1800	**D3RR2W1**
120 Vac	3PDT	1700	**D3RR3A**
110/125 Vdc	3PDT	10,000	**D3RR3A1**
220/240 Vac	3PDT	7200	**D3RR3B**
12 Vdc	3PDT	120	**D3RR3R1**
24 Vac	3PDT	72	**D3RR3T**
24 Vdc	3PDT	470	**D3RR3T1**

Accessories

D3RR/D3RF Series Sockets and Accessories

Type	Module Size	Nominal Voltage (Max. for Sockets)	Nominal Current	Mounting Style	Wire Size	Wire Connection	Standard Pack	Catalog Number
Socket	A	300	16	DIN rail/panel	12/14 (2) AWG, 4/2.5 (2) mm^2	Screw clamping	1	**D3PA6** ①
	A	300	12	DIN rail/panel	12/14 (2) AWG, 4/2.5 (2) mm^2	Elevator	10	**D3PAL8** ①
	None	300/600	15/10	DIN rail/panel	12/14 (2) AWG, 4/2.5 (2) mm^2	Screw clamping	10	**D3PA2**
	A	600	5	DIN rail/panel	12/14 (2) AWG, 4/2.5 (2) mm^2	Screw clamping	1	**D3PA7** ①
	A	300	12	DIN rail/panel	12/14 (2) AWG, 4/2.5 (2) mm^2	Elevator	10	**D3PAL11** ①
	None	300/600	15/5	DIN rail/panel	12/14 (2) AWG, 4/2.5 (2) mm^2	Screw clamping	10	**D3PA3**
Metal spring clip	—	—	—	—	—	—	25	**PQC-1332**
	—	—	—	—	—	—	10	**PQC-1351**
Protection diode	A	6 to 250 Vdc	—	—	—	—	20	**MOD-AD250**
LED indicator	A	24 Vac/Vdc	—	—	—	—	20	**MOD-ALG24**
	A	120/240 Vac/Vdc	—	—	—	—	20	**MOD-ALG240**
MOV suppressor	A	120 Vac/Vdc	—	—	—	—	20	**MOD-AMV120**
	A	24 Vac/Vdc	—	—	—	—	20	**MOD-AMV24**
	A	240 Vac/Vdc	—	—	—	—	20	**MOD-AMV240**
R/C suppressor	A	6 to 24 Vac/Vdc	—	—	—	—	20	**MOD-RC24**
	A	110 to 240 Vac/Vdc	—	—	—	—	20	**MOD-RC240**
Write-on plastic labels	—	—	—	—	—	—	10	**PWF-D3D5**
Coil bus jumpers	—	—	—	—	—	—	10	**D3PJ1**
Plastic DIN rail end stop	—	—	—	—	—	—	25	**PFP-P**

Note

① Protection category (finger safe), EN 60529: IP20.

Technical Data and Specifications

D3RR/D3RF Series Relay Specifications

Description	D3RR	D3RF
Contact Characteristics		
Contact rating	10 A	10 A
Terminal style	Octal	Octal
Contact materials	Silver alloy	Silver alloy
Maximum switching voltage	300 V	300 V
Switching current at voltage—resistive	16 A at 277 Vac 50/60 Hz	16 A at 277 Vac 50/60 Hz
	16 A at 120 Vac 50/60 Hz	16 A at 120 Vac 50/60 Hz
	16 A at 28 Vdc	16 A at 28 Vdc
Switching current at voltage	1/2 hp at 240 Vac	1/2 hp at 240 Vac
	1/3 hp at 120 Vac	1/3 hp at 120 Vac
Pilot duty	B300	B300
Minimum switching requirement	100 mA at 5 Vdc (0.5 W)	100 mA at 5 Vdc (0.5 W)
Coil Characteristics		
Operating range		
% of nominal (AC)	85 to 110%	85 to 110%
% of nominal (DC)	80 to 110%	80 to 110%
Average consumption	3 VA	3 VA
	1.4 W	1.4 W
Dropout voltage threshold	15% (AC)	15% (AC)
	10% (DC)	10% (DC)
Performance		
Electrical life (UL 508) operations at rated current	100,000 operations	100,000 operations
Mechanical life operations unpowered	5,000,000 operations	5,000,000 operations
Response time	20 ms	20 ms
Dielectric strength		
Between coil and contact Vac (rms)	1500 V (rms)	1500 V (rms)
Between poles Vac (rms)	1500 V (rms)	1500 V (rms)
Environment		
Ambient air temperature around the device		
Storage	–40 °F to +185 °F (–40 °C to +85 °C)	–40 °F to +185 °F (–40 °C to +85 °C)
Operation	–40 °F to +131 °F (–40 °C to +55 °C)	–40 °F to +131 °F (–40 °C to +55 °C)
Vibration resistance—operational	3 g-n at 10–55 Hz	3 g-n at 10–55 Hz
Shock resistance	10 g-n	10 g-n
Degree of protection	IP40	IP40
Features		
Cover options	Plain cover	Full Featured
Features	Mechanical flag indicator	Bipolar LED/ Locking pushbutton/ Removable ID tag/ Mechanical flag indicator
Product certifications	RoHS/UL/CE/CSA	RoHS/UL/CE/CSA

Dimensions

Approximate Dimensions in Inches (mm)

D3RR2/D3RF2

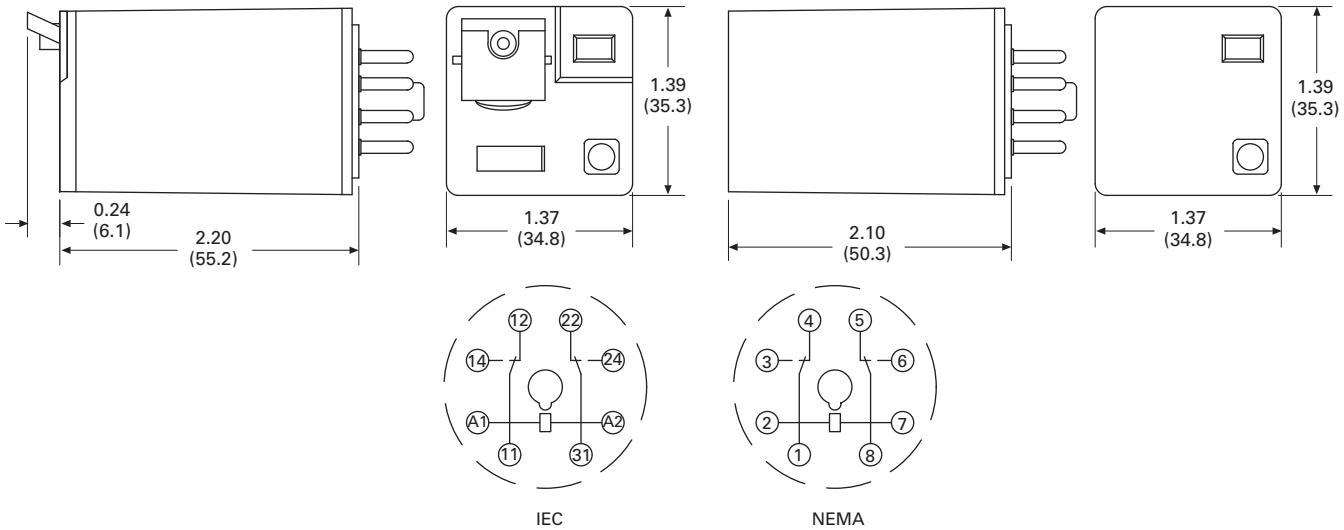

D3RR3/D3RF3

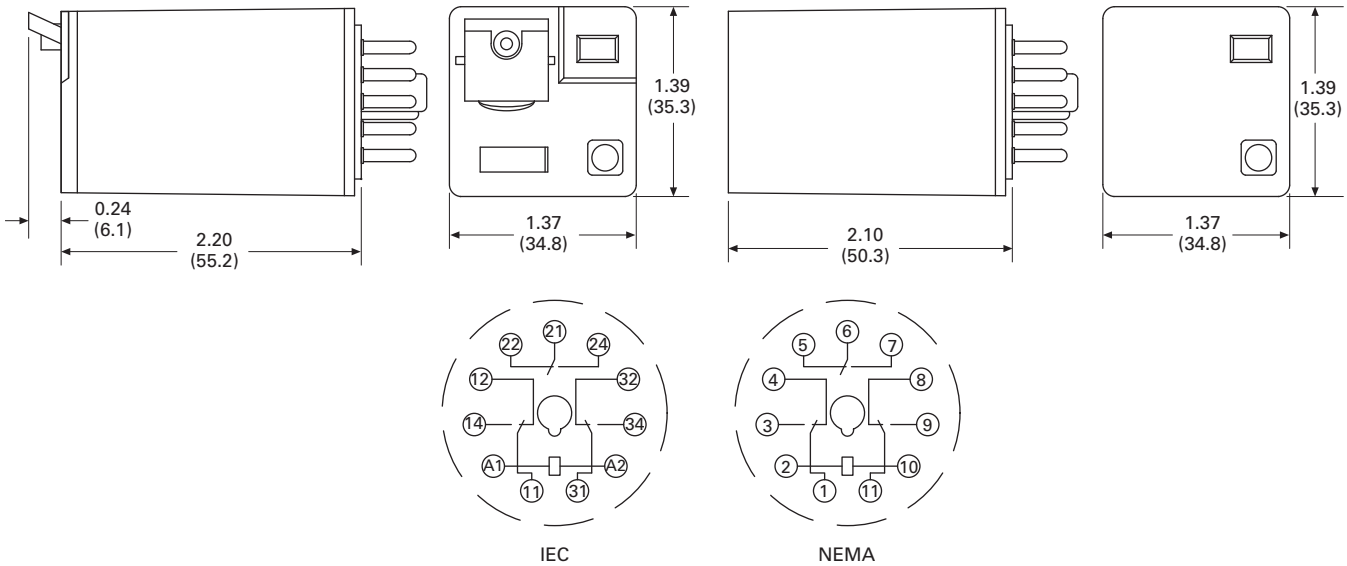

Approximate Dimensions in Inches (mm)

D3PA2

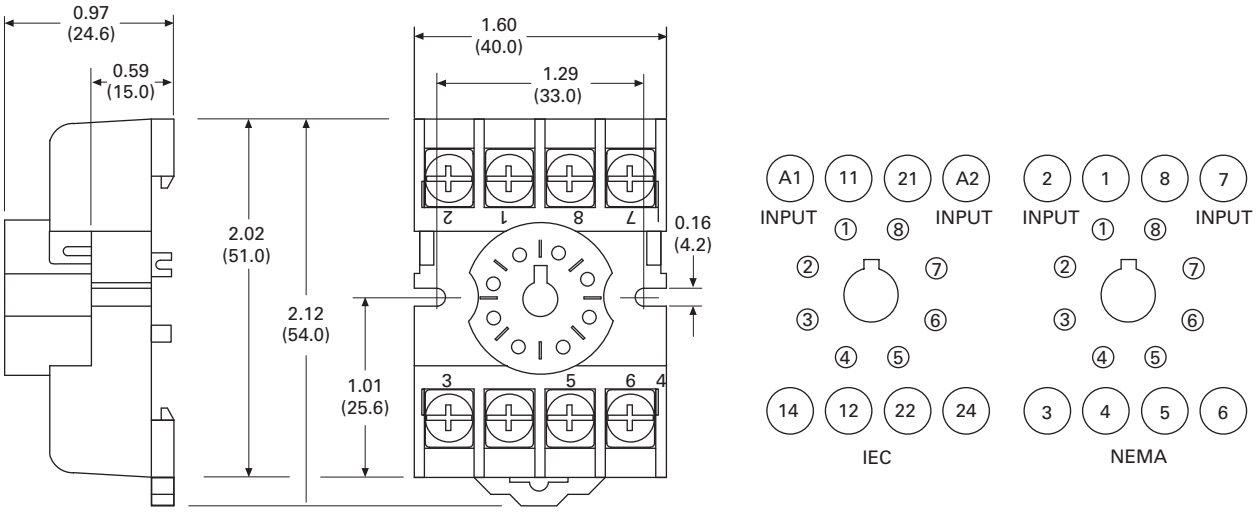

D3PA3

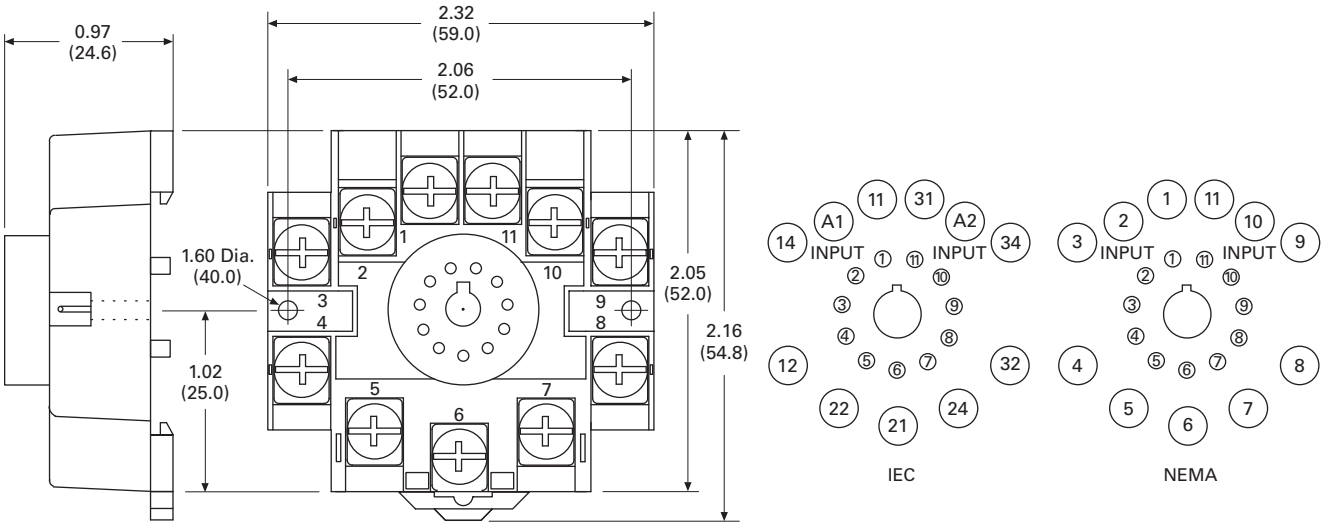

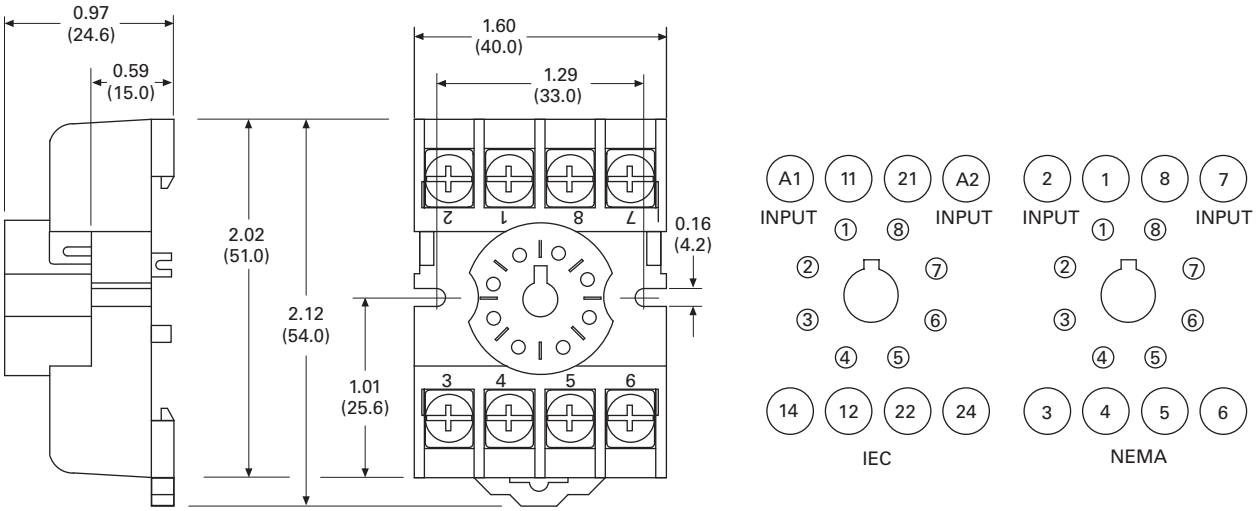

Approximate Dimensions in Inches (mm)

D3PA6

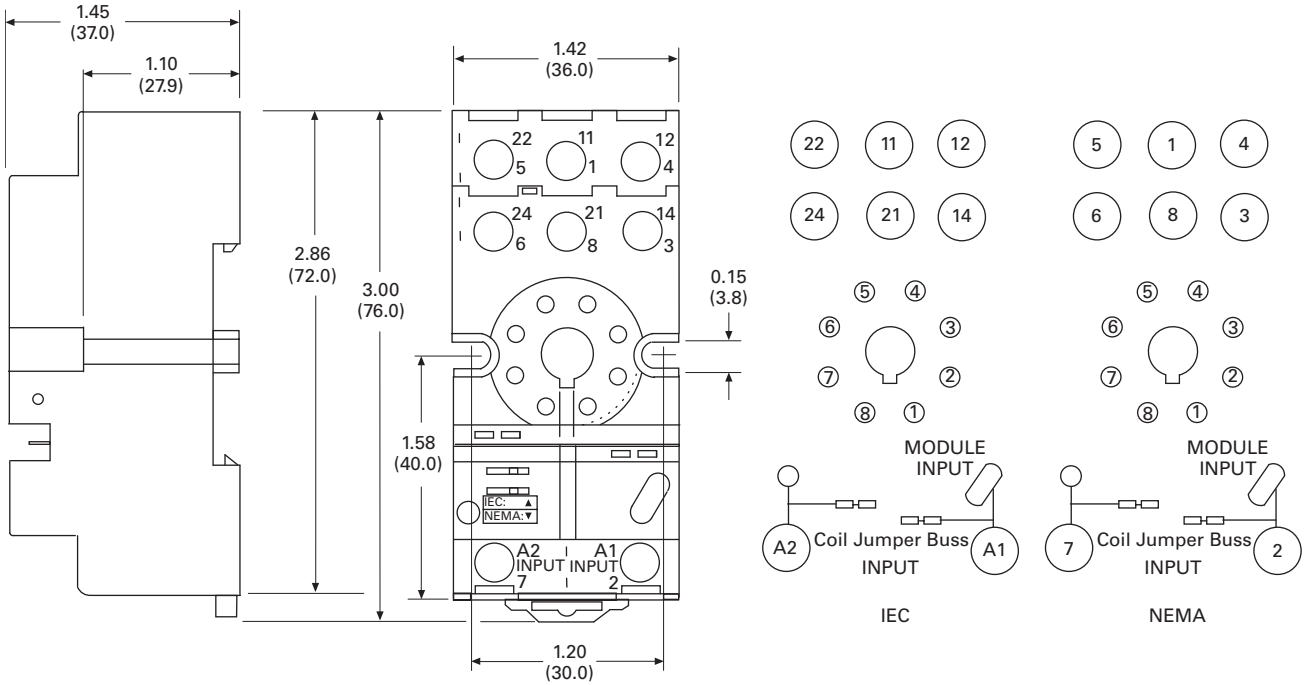

D3PA7

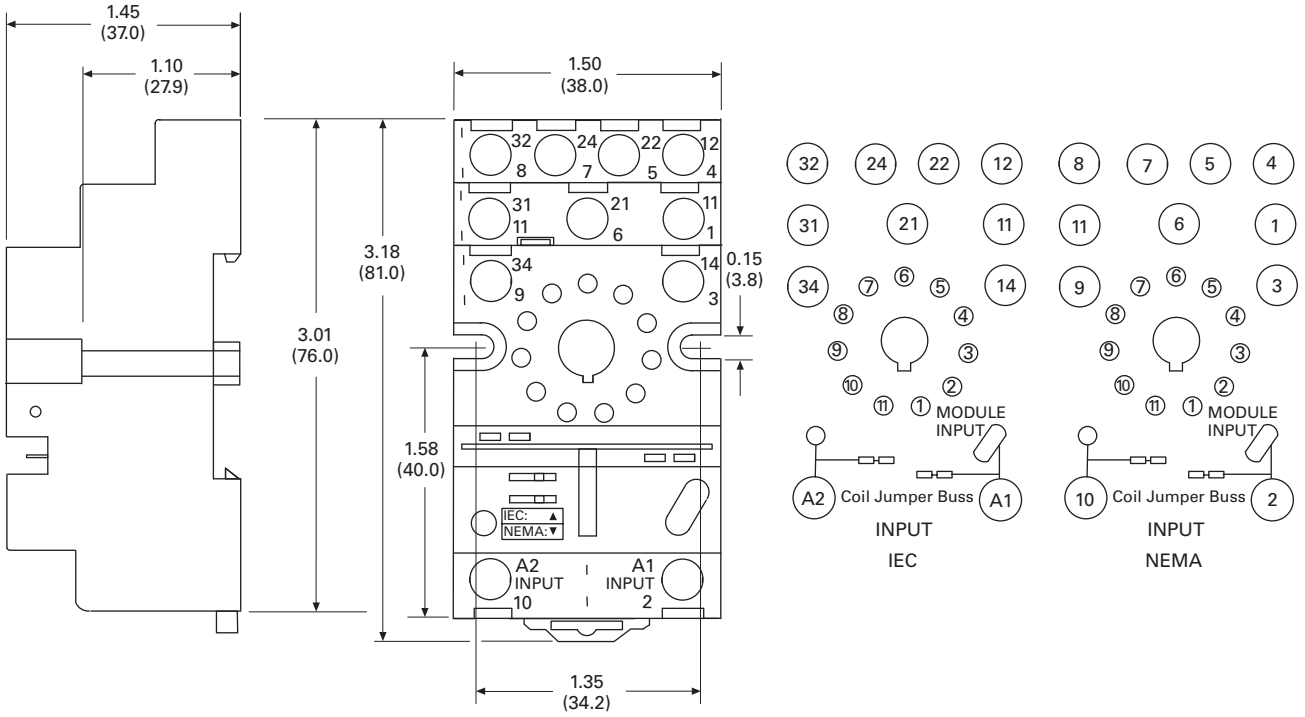

Approximate Dimensions in Inches (mm)

D3PAL8

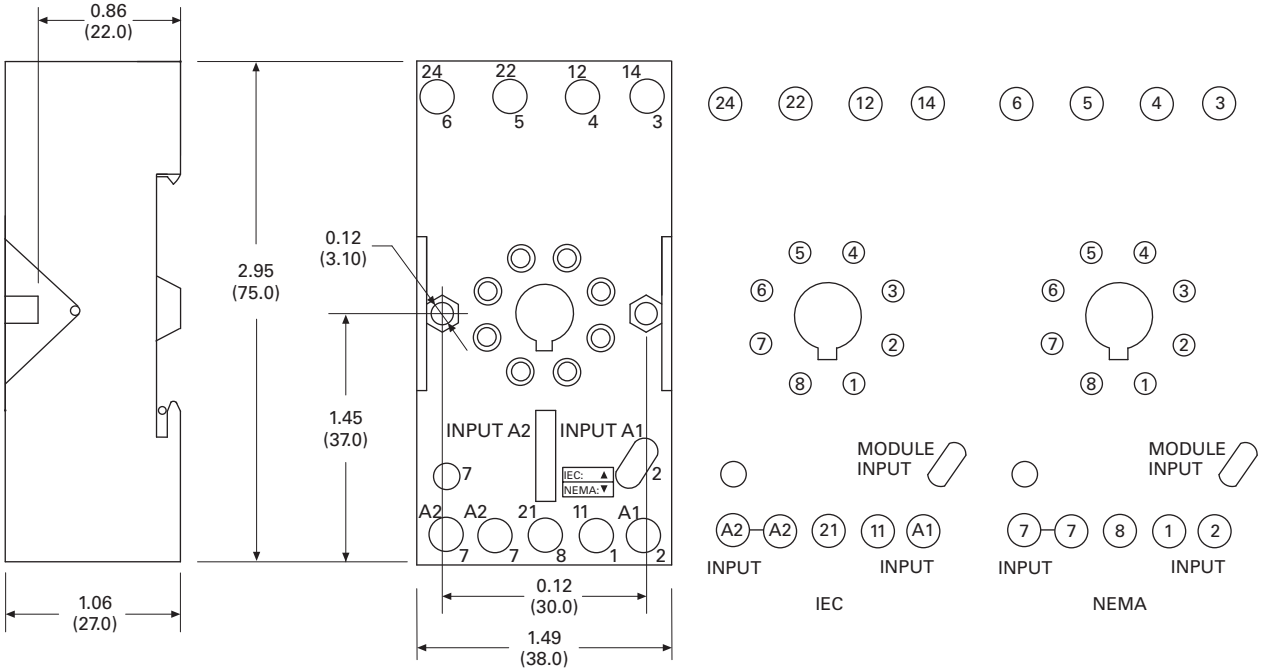

D3PAL11

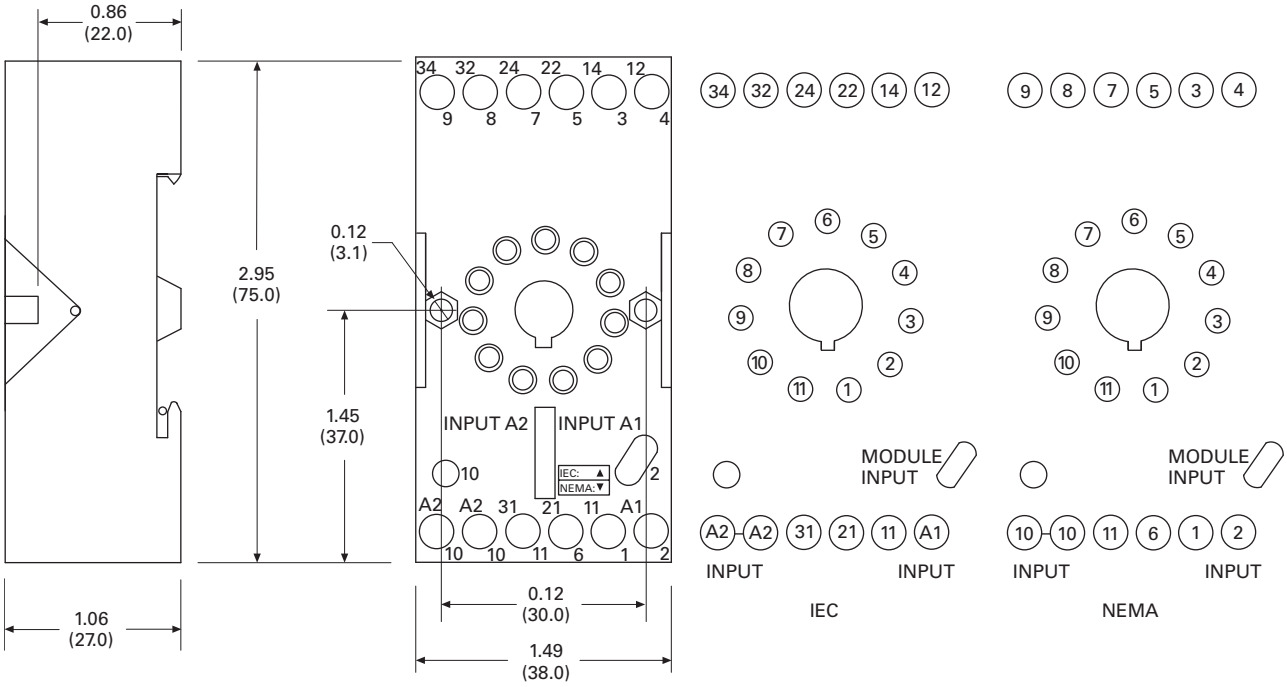

D4 Series Relay

Contents

Description	*Page*
D1RR/D1RF Series	**V7-T3-53**
D2RR/D2RF Series	**V7-T3-57**
D3RR/D3RF Series	**V7-T3-67**
D4 Series	
Technical Data and Specifications	**V7-T3-78**
Dimensions	**V7-T3-79**
D5RR/D5RF Series	**V7-T3-80**
D7PR/D7PF Series	**V7-T3-89**
D8 Series	**V7-T3-103**
D9 Series	**V7-T3-108**
Accessories	**V7-T3-112**

D4 Series

Product Description

The D4 Series is a slim-form relay designed to fit into tight spaces. The retaining clip is built in to the socket to provide easy and secure assembly.

Features

- Slim-styled power relay
- Socket has built-in hold-down clip
- Panel or DIN rail mounting

Standards and Certifications

File # E1491, E65657

File # LR701519

Catalog Number Selection

D4 Series ①

D4PR 1 1 A

Family Type
D4PR

Contact Configuration
1 = SPDT
2 = DPDT

Options
Blank = Plain cover
1 = Indicating light

Coil Voltage
A = 120 Vac
A1 = 110 Vdc
B = 240 Vac
P = 6 Vac
P1 = 6 Vdc
R = 12 Vac
R1 = 12 Vdc
T = 24 Vac
T1 = 24 Vdc
W = 48 Vac
W1 = 48 Vdc

Product Selection

D4 Relay/Socket Quick Reference

Relay Type	Socket	Hold-Down Clip
D4PR1	D4PA1	②
D4PR2	D4PA2	②

Notes

① For deciphering catalog numbers. Do not use for ordering as not all combinations are readily available.

② Socket has built-in hold-down spring.

D4 Series Relay

D4 Series

Voltage/Poles	Standard Pack	Catalog Number
DIN Rail Sockets		
Single-pole	10	**D4PA1**
Two-pole	10	**D4PA2**
SPDT with Indicating Light		
120 Vac	1	**D4PR11A**
110 Vdc	1	**D4PR11A1**
240 Vac	1	**D4PR11B**
6 Vac	50	**D4PR11P**
6 Vdc	50	**D4PR11P1**
12 Vac	50	**D4PR11R**
12 Vdc	1	**D4PR11R1**
24 Vac	1	**D4PR11T**
24 Vdc	1	**D4PR11T1**
48 Vdc	50	**D4PR11W1**
Standard SPDT		
120 Vac	1	**D4PR1A**
110 Vdc	50	**D4PR1A1**
240 Vac	50	**D4PR1P**
6 Vac	1	**D4PR1P1**
6 Vdc	50	**D4PR1R**
12 Vac	1	**D4PR1R1**
12 Vdc	1	**D4PR1R1-A2**
24 Vac	1	**D4PR1T**
24 Vdc	1	**D4PR1T1**
48 Vdc	1	**D4PR1W1**

Voltage/Poles	Standard Pack	Catalog Number
DPDT with Indicating Light		
120 Vac	1	**D4PR21A**
110 Vdc	1	**D4PR21A1**
240 Vac	1	**D4PR21B**
6 Vac	50	**D4PR21P**
6 Vdc	1	**D4PR21P1**
12 Vac	50	**D4PR21R**
12 Vdc	1	**D4PR21R1**
24 Vac	1	**D4PR21T**
24 Vdc	1	**D4PR21T1**
48 Vdc	50	**D4PR21W1**
Standard DPDT		
120 Vac	1	**D4PR2A**
110 Vdc	50	**D4PR2A1**
240 Vac	50	**D4PR2B**
6 Vac	50	**D4PR2P**
6 Vdc	1	**D4PR2P1**
12 Vac	50	**D4PR2R**
12 Vdc	1	**D4PR2R1**
24 Vac	1	**D4PR2T**
24 Vdc	1	**D4PR2T1**
48 Vdc	1	**D4PR2W1**

Technical Data and Specifications

D4 Series

Description	Resistive Load (p.f. = 1)	Inductive Load (p.f. = 0.4, L/R = 7 ms)
D4PR1		
Rated load	250 Vac 10 A	250 Vac 7.5 A
	30 Vdc 10 A	30 Vdc 5 A
Carry current	10 A	10 A
Max. operating voltage	380 Vac/125 Vdc	380 Vac/125 Vdc
Max. operating current	10 A	10 A
Contact material	AgCdO	AgCdO
Max. switching capacity	2500 VA	1875 VA
	300 W	150 W
Min. permissible load	100 mA, 5 Vdc	100 mA, 5 Vdc
Pickup voltage (max.)	80% AC/70% DC	80% AC/70% DC
Dropout voltage (min.)	30% AC/15% DC	30% AC/15% DC
Voltage (max.)	110%	110%
Mechanical life (min.)	10,000,000 AC/20,000,000 DC	10,000,000 AC/20,000,000 DC
Electrical life at all contact ratings (min.)	100,000	100,000
Maximum hp ratings	1/3 hp (125 Vac)	1/3 hp (125 Vac)
	1/2 hp (250 Vac)	1/2 hp (250 Vac)
	1/2 hp (277 Vac)	1/2 hp (277 Vac)
D4PR2		
Rated load	240 Vac 5 A	250 Vac 2 A
	30 Vdc 5 A	30 Vdc 3 A
Carry current	5 A	5 A
Max. operating voltage	380 Vac/125 Vdc	380 Vac/125 Vdc
Max. operating current	5 A	5 A
Contact material	AgCdO	AgCdO
Max. switching capacity	1250 VA	500 VA
	150 W	90 W
Min. permissible load	10 mA, 5 Vdc	10 mA, 5 Vdc
Pickup voltage (max.)	80% AC/70% DC	80% AC/70% DC
Dropout voltage (min.)	30% AC/15% DC	30% AC/15% DC
Voltage (max.)	110%	110%
Mechanical life (min.)	10,000,000 AC/20,000,000 DC	10,000,000 AC/20,000,000 DC
Electrical life at all contact ratings (min.)	100,000	100,000
Maximum hp ratings	1/6 hp (120 Vac)	1/6 hp (120 Vac)
	1/3 hp (240 Vac)	1/3 hp (240 Vac)
	1/3 hp (265 Vac)	1/3 hp (265 Vac)

Dimensions

Approximate Dimensions in Inches (mm)

D4PR1

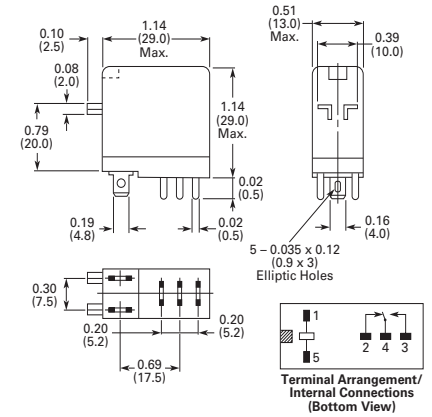

D4PR2

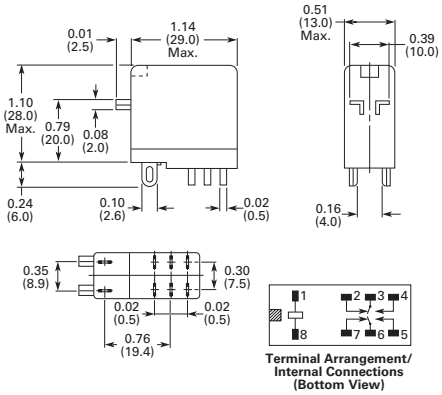

D4PA1

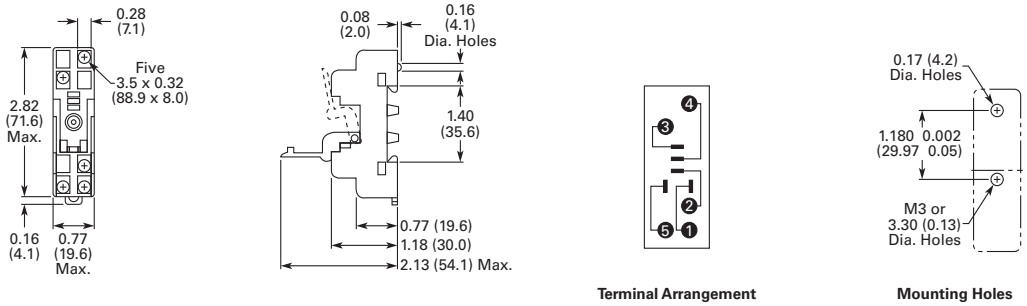

Terminal Arrangement

Mounting Holes

D4PA2

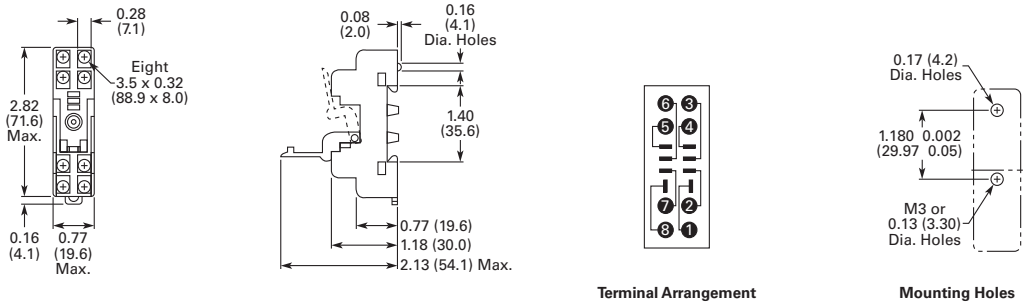

Terminal Arrangement

Mounting Holes

D5 Series Relay

Contents

Description	*Page*
D1RR/D1RF Series	**V7-T3-53**
D2RR/D2RF Series	**V7-T3-57**
D3RR/D3RF Series	**V7-T3-67**
D4 Series	**V7-T3-76**
D5RR/D5RF Series	
Catalog Number Selection	**V7-T3-81**
Product Selection	**V7-T3-81**
Accessories	**V7-T3-83**
Technical Data and Specifications	**V7-T3-84**
Wiring Diagrams	**V7-T3-85**
Dimensions	**V7-T3-86**
D7PR/D7PF Series	**V7-T3-89**
D8 Series	**V7-T3-103**
D9 Series	**V7-T3-108**
Accessories	**V7-T3-112**

D5RR/D5RF Series

Product Description

The D5 Series is rated at 10 A and is available in full-featured and plain cover styles.

Features

D5RR

- Industrial rated 300 V, 10 A relay in two-pole and three-pole configurations
- Compact design can be panel or DIN rail mounted

D5RF

- Flag indicator shows relay status in manual or powered condition
- LED status lamp shows coil ON or OFF status—ideal for use in low light applications
- Push-to-Test button allows for manual operation of relay without the need for coil power
- Lock-down door holds pushbutton and contacts in the operate position when activated
- Finger-grip cover allows operator to remove relays from sockets easily
- ID tag/write label to identify relays in multiple-relay circuits
- Bipolar LED allows for reverse polarity applications

Standards and Certifications

When used with accompanying Eaton screw terminal socket (D5RF only)

Catalog Number Selection

D5 Series

D5RR 3 1

Family Type
D5RR = Standard relay
D5RF = Full featured relay

Contact Configuration
2 = DPDT
3 = 3PDT

Coil Voltage
A = 120 Vac
A1 = 110 Vdc
B = 240 Vac
R1 = 12 Vdc
T = 24 Vac
T1 = 24 Vdc
W1 = 48 Vdc

Product Selection

D5 Relay/Socket Quick Reference

Relay Type	Socket	Clip	Module Type	ID Tag	Jumper
D5RR2, D5RF2, D5RR3, D5RF3	D5PAL	PQC-1351	A	PWF-D3D5	D3PJ1
	D5PA2	PQC-1351	None	—	—
	D5PA3L	PQC-1351	None	—	—
	D5PA3S	PQC-1351	None	—	—

D5 Series Relay

D5 Series

Coil Voltage	Contact Configuration	Coil Resistance (Ohms)	Catalog Number
Full Featured			
120 Vac	DPDT	1700	**D5RF2A**
110/125 Vdc	DPDT	10,000	**D5RF2A1**
220/240 Vac	DPDT	7200	**D5RF2B**
12 Vdc	DPDT	120	**D5RF2R1**
24 Vac	DPDT	72	**D5RF2T**
24 Vdc	DPDT	470	**D5RF2T1**
120 Vac	3PDT	1700	**D5RF3A**
110/125 Vdc	3PDT	10,000	**D5RF3A1**
220/240 Vac	3PDT	7200	**D5RF3B**
12 Vdc	3PDT	120	**D5RF3R1**
24 Vac	3PDT	72	**D5RF3T**
24 Vdc	3PDT	470	**D5RF3T1**
Side Flange Cover			
220/240 Vac	DPDT	7200	**D5RB2B**
12 Vdc	DPDT	120	**D5RB2R1**
24 Vac	DPDT	72	**D5RB2T**
24 Vdc	DPDT	470	**D5RB2T1**
Plain Cover			
120 Vac	DPDT	1700	**D5RR2A**
110/125 Vdc	DPDT	10,000	**D5RR2A1**
220/240 Vac	DPDT	7200	**D5RR2B**
24 Vac	DPDT	72	**D5RR2T**
24 Vdc	DPDT	470	**D5RR2T1**
120 Vac	3PDT	1700	**D5RR3A**
110/125 Vdc	3PDT	10,000	**D5RR3A1**
220/240 Vac	3PDT	7200	**D5RR3B**
12 Vdc	3PDT	120	**D5RR3R1**
24 Vac	3PDT	72	**D5RR3T**
24 Vdc	3PDT	470	**D5RR3T1**

Accessories

D5 Sockets and Accessories

Type	Module Size	Nominal Voltage (Max. for Sockets)	Nominal Current	Mounting Style	Wire Size	Wire Connection	Standard Pack	Catalog Number
Socket	A	300	25	DIN rail	10 /14 (2) AWG, 6/2.5 (2) mm^2	Elevator	10	**D5PAL** ①
	None	300	15	DIN rail/panel	12/14 (2) AWG, 4/2.5 (2) mm^2	Screw clamping	10	**D5PA2**
	None	300	15	Chassis	(Output): 16 AWG, 1 mm^2	Solder	10	**D5PA3L**
	None	300	15	Chassis	(Output): 16 AWG, 1 mm^2	Solder	10	**D5PA3S**
Metal spring clip	—	—	—	—	—	—	10	**PQC-1351**
Protection diode	A	6 to 250 Vdc	—	—	—	—	20	**MOD-AD250**
LED indicator	A	24 Vac/Vdc	—	—	—	—	20	**MOD-ALG24**
	A	120/240 Vac/Vdc	—	—	—	—	20	**MOD-ALG240**
MOV suppressor	A	120 Vac/Vdc	—	—	—	—	20	**MOD-AMV120**
	A	24 Vac/Vdc	—	—	—	—	20	**MOD-AMV24**
	A	240 Vac/Vdc	—	—	—	—	20	**MOD-AMV240**
R/C suppressor	A	6 to 24 Vac/Vdc	—	—	—	—	20	**MOD-RC24**
	A	110 to 240 Vac/Vdc	—	—	—	—	20	**MOD-RC240**
Write-on plastic labels	—	—	—	—	—	—	10	**PWF-D3D5**
Coil bus jumpers	—	—	—	—	—	—	10	**D3PJ1**
Plastic DIN rail end stop	—	—	—	—	—	—	25	**PFP-P**

Note

① Protection category (finger safe), EN 60529: IP20.

Technical Data and Specifications

D5 Series

Description	D5RR	D5RF
Contact Characteristics		
Contact rating	10 A	10 A
Terminal style	Plug-in	Plug-in
Contact materials	Silver alloy	Silver alloy
Maximum switching voltage	300 V	300 V
Switching current at voltage—resistive		
	16 A at 277 Vac 50/60 Hz	16 A at 277 Vac 50/60 Hz
	16 A at 120 Vac 50/60 Hz	16 A at 120 Vac 50/60 Hz
	16 A at 28 Vdc	16 A at 28 Vdc
Switching current at voltage	1/2 hp at 240 Vac	1/2 hp at 240 Vac
	1/3 hp at 120 Vac	1/3 hp at 120 Vac
Pilot duty	B300	B300
Minimum switching requirement	100 mA at 5 Vdc (0.5 W)	100 mA at 5 Vdc (0.5 W)
Coil Characteristics		
Operating range		
% of nominal (AC)	85 to 110%	85 to 110%
% of nominal (DC)	80 to 110%	80 to 110%
Average consumption	3 VA 1.4 W	3 VA 1.4 W
Drop-out voltage threshold	10%/15% (AC) 10% (DC)	10%/15% (AC) 10% (DC)
Performance		
Electrical life (UL 508) operations at rated current	100,000 operations	100,000 operations
Mechanical life operations unpowered	5,000,000 operations	5,000,000 operations
Response time	20 ms	20 ms
Dielectric strength		
Between coil and contact Vac (rms)	1500 V (rms)	1500 V (rms)
Between poles Vac (rms)	1500 V (rms)	1500 V (rms)
Environment		
Ambient air temperature around the device		
Storage	–40 °F to +185 °F (–40 °C to +85 °C)	–40 °F to +185 °F (–40 °C to +85 °C)
Operation	–40 °F to +131 °F (–40 °C to +55 °C)	–40 °F to +131 °F (–40 °C to +55 °C)
Vibration resistance—operational	3 g-n at 10–55 Hz	3 g-n at 10–55 Hz
Shock resistance	10 g-n	10 g-n
Degree of protection	IP40	IP40
Features		
Cover options	Flange/plain cover with LED	Full featured
Features	Mechanical flag indicator (LED optional)	Bipolar LED/ Mechanical flag indicator/ Locking pushbutton/ Removable ID tag
Product certifications	RoHS/UL/CE/CSA	RoHS/UL/CE/CSA

Wiring Diagrams

D5PA3L and D5PA3S

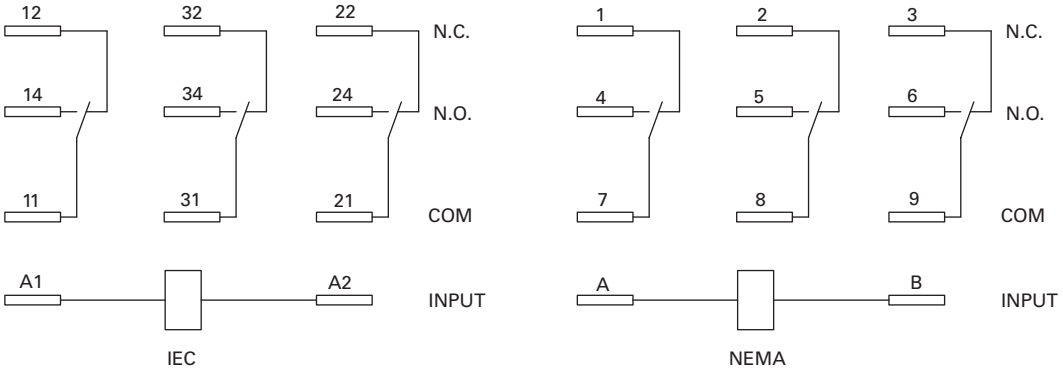

D5RR2/D5RF2 DPDT

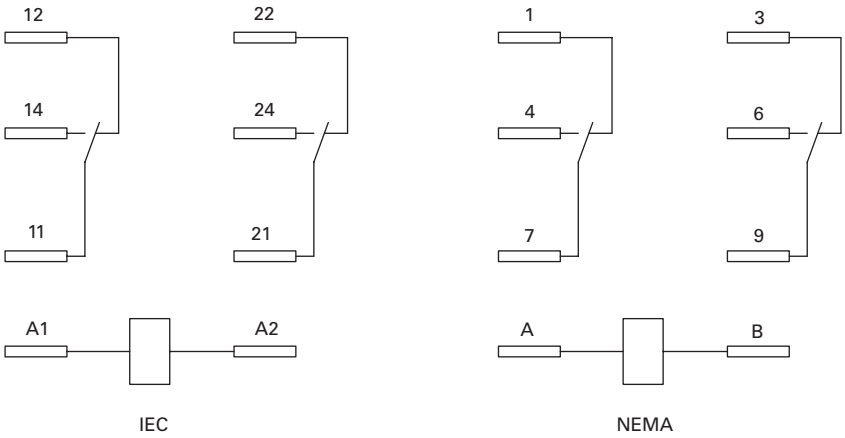

D5RR3/D5RF3 3PDT

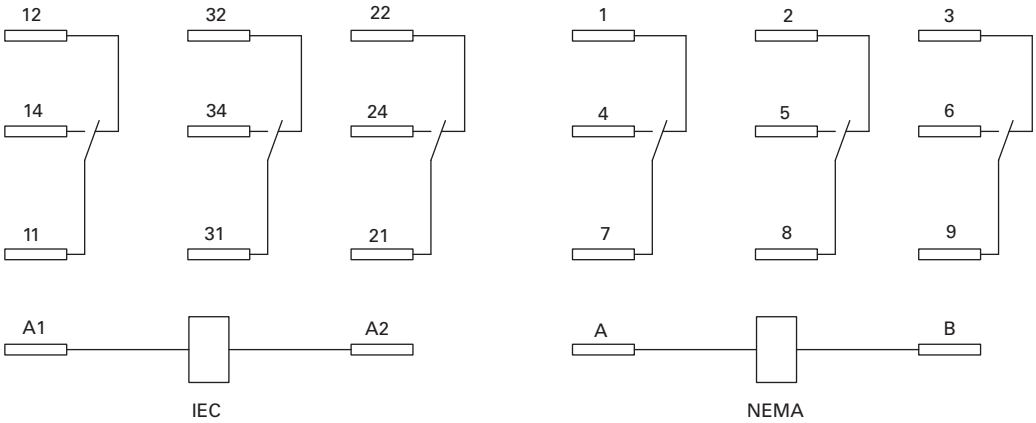

Dimensions

Approximate Dimensions in Inches (mm)

D5RR and D5RF

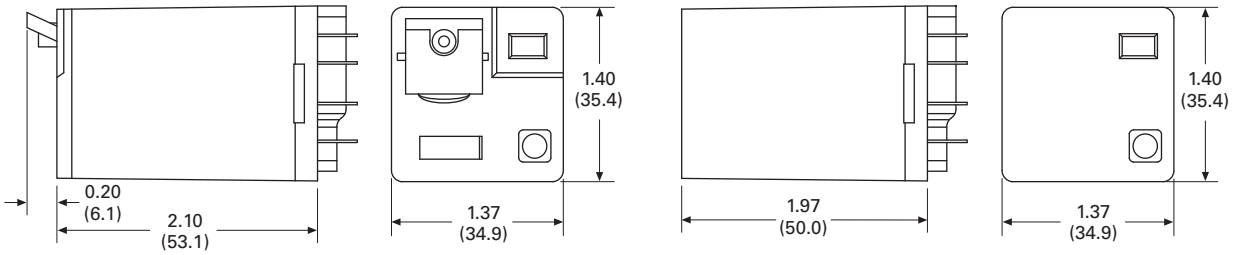

D5PA2

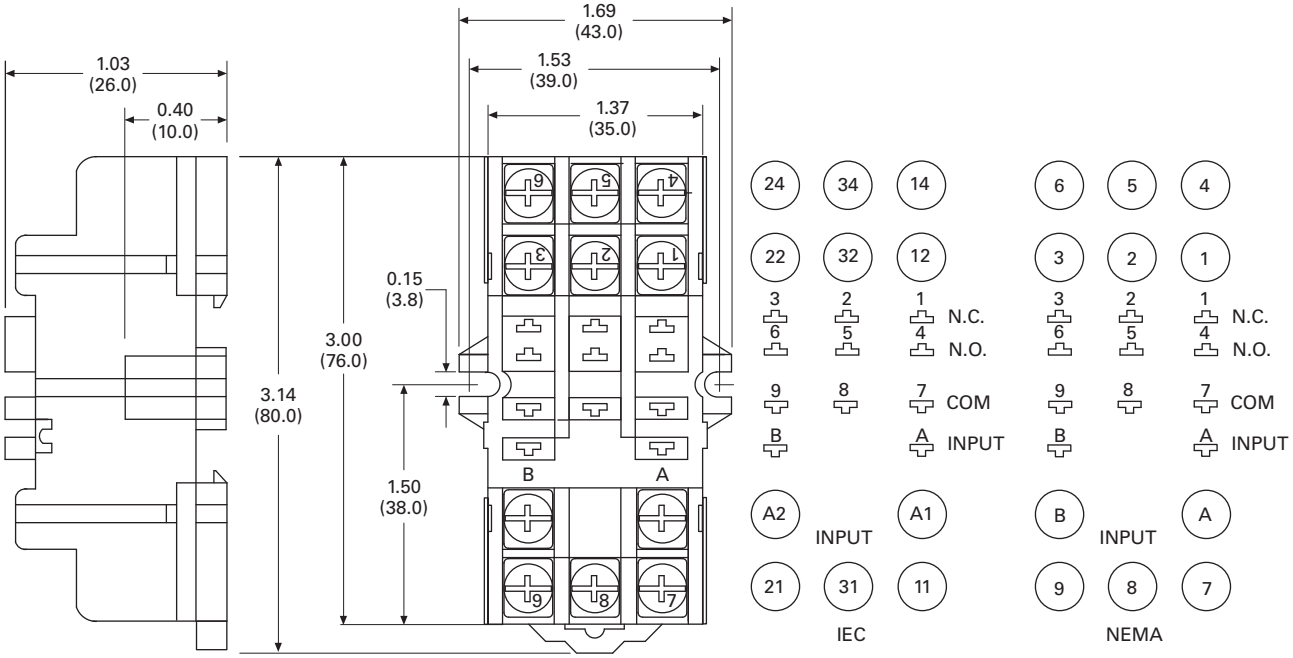

Approximate Dimensions in Inches (mm)

D5PA3L and D5PA3S

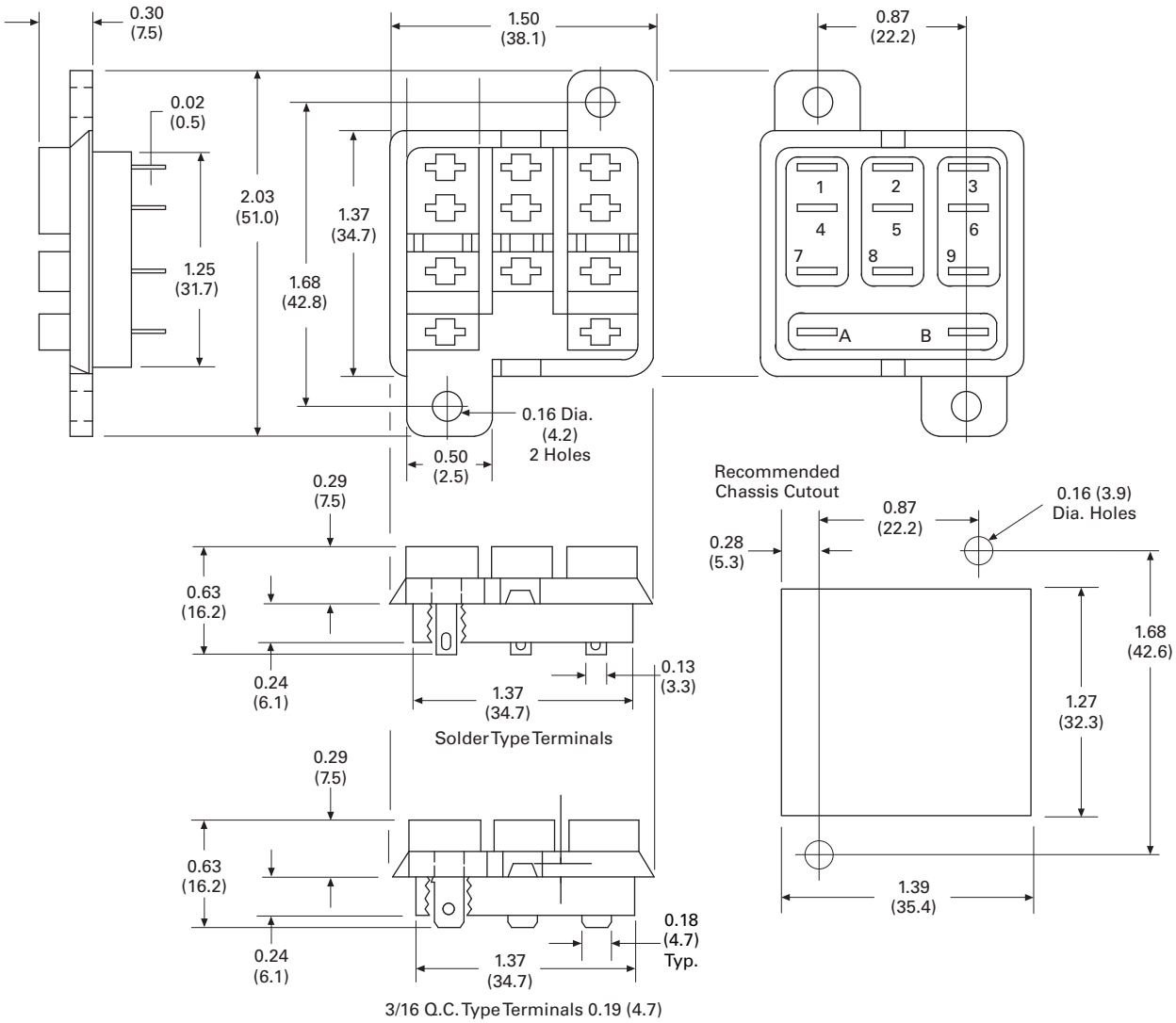

Approximate Dimensions in Inches (mm)

D5PAL

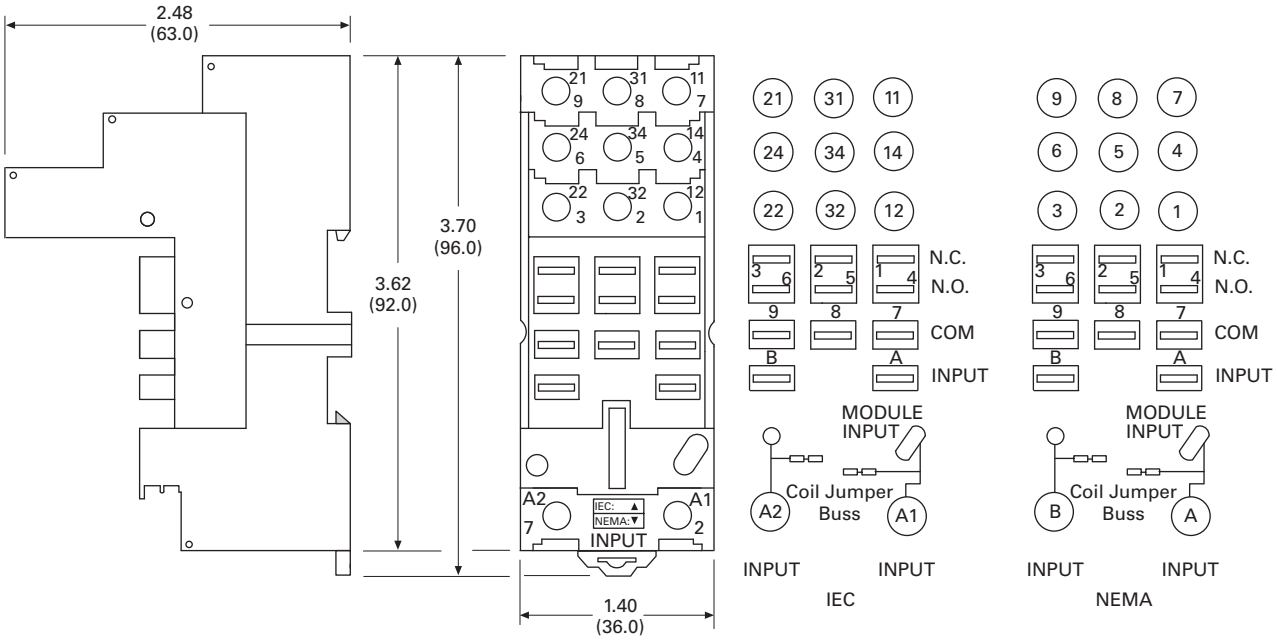

D7 Series Relay

Contents

Description	*Page*
D1RR/D1RF Series	**V7-T3-53**
D2RR/D2RF Series	**V7-T3-57**
D3RR/D3RF Series	**V7-T3-67**
D4 Series	**V7-T3-76**
D5RR/D5RF Series	**V7-T3-80**
D7PR/D7PF Series	
Catalog Number Selection	**V7-T3-90**
Product Selection	**V7-T3-90**
Accessories	**V7-T3-92**
Technical Data and Specifications	**V7-T3-93**
Wiring Diagrams	**V7-T3-95**
Dimensions	**V7-T3-96**
D8 Series	**V7-T3-103**
D9 Series	**V7-T3-108**
Accessories	**V7-T3-112**

D7PR/D7PF Series

Product Description

The D7 Series is a cost-effective control relay with high dielectric strength and high current-carrying capacity.

Features

D7PR

- Arc barrier equipped relay with high dielectric strength
- Panel and DIN rail mounting

D7PF

- Flag indicator shows relay status in manual or powered condition
- Bipolar LED status lamp allows for reverse polarity applications
  - Shows coil ON or OFF status
  - Ideal in low light conditions
- Color-coded pushbutton identifies AC coils with red or DC coils with blue pushbuttons
  - Allows for manual operation of relay without the need for coil power
  - Ideal for field service personnel to test control circuits
- Lock-down door, when activated, holds pushbutton and contacts in the operate position
  - Excellent for analyzing circuit problems
- Finger-grip cover allows operator to remove relays from sockets more easily than conventional relays
- White plastic ID tag/write label used for identification of relays in multi-relay circuits

Standards and Certifications

File # E37317, E65657

File # LR217017, LR217069

Catalog Number Selection

D7 Series

D7PR 1 1 A

Family Type
D7PR = Standard relay
D7PF = Full featured relay

Contact Configuration
2 = DPDT
3 = 3PDT
4 = 4PDT

Options
Blank = Plain cover (D7PR only)
A = LED test button, flag indicator, lock-down door, finger-grip cover, ID tag (D7PF only)

Coil Voltage
A = 120 Vac
A1 = 110 Vdc
B = 240 Vac
R1 = 12 Vdc
T = 24 Vac
T1 = 24 Vdc
W1 = 48 Vdc

Product Selection

D7 Relay/Socket Quick Reference

Relay Type	Socket/Adapter	Clip	Module Type	ID Tag	Jumper
D7PR2, D7PF2	D7PAA	PQC-1342	B	—	—
		PQC-1349	B	—	—
	D7PA9	PQC-1342	None	—	—
	PFC-D2D72	—	None	—	—
D7PR3, D7PF3	D7PAB	PQC-1783	A	—	—
		PMC-1783	A	—	—
	PFC-D73	—	None	—	—
D7PR4, D7PF4	D7PAD	PQC-1784	A	—	—
		PMC-1784	A	—	—
	PFC-D74	—	None	—	—

D7 Series Relay

D7 Series

Coil Voltage	Contact Configuration	Coil Resistance (Ohms)	Catalog Number
Full Featured			
120 Vac	DPDT	4430	**D7PF2AA**
110/125 Vdc	DPDT	11,000	**D7PF2AA1**
220/240 Vac	DPDT	15,720	**D7PF2AB**
12 Vdc	DPDT	160	**D7PF2AR1**
24 Vac	DPDT	180	**D7PF2AT**
24 Vdc	DPDT	650	**D7PF2AT1**
24 Vac	3PDT	103	**D7PF3AT**
24 Vdc	3PDT	400	**D7PF3AT1**
120 Vac	4PDT	2220	**D7PF4AA**
110/125 Vdc	4PDT	7340	**D7PF4AA1**
240 Vac	4PDT	9120	**D7PF4AB**
12 Vdc	4PDT	96	**D7PF4AR1**
24 Vac	4PDT	84.5	**D7PF4AT**
24 Vdc	4PDT	388	**D7PF4AT1**
48 Vac	4PDT	410	**D7PF4AW1**
Plain Cover			
120 Vac	DPDT	4430	**D7PR2A**
110/125 Vdc	DPDT	11,000	**D7PR2A1**
12 Vdc	DPDT	160	**D7PR2R1**
24 Vac	DPDT	180	**D7PR2T**
24 Vdc	DPDT	650	**D7PR2T1**
120 Vac	3PDT	2770	**D7PR3A**
240 Vac	3PDT	12,100	**D7PR3B**
12 Vdc	3PDT	100	**D7PR3R1**
24 Vac	3PDT	103	**D7PR3T**
24 Vdc	3PDT	400	**D7PR3T1**
120 Vac	4PDT	2220	**D7PR4A**
110/125 Vdc	4PDT	7340	**D7PR4A1**
240 Vac	4PDT	9120	**D7PR4B**
24 Vac	4PDT	84.5	**D7PR4T**
24 Vdc	4PDT	388	**D7PR4T1**

Accessories

D7 Sockets and Accessories

Type	Module Size	Nominal Voltage (Max. for Sockets)	Nominal Current	Mounting Style	Wire Size	Wire Connection	Standard Pack	Catalog Number
Socket	B	300	16	DIN rail/panel	12/14 (2) AWG, 4/2.5 (2) mm^2	Screw clamping	—	**D7PAA** ①
	None	300	10	DIN rail/panel	12/14 (2) AWG, 4/2.5 (2) mm^2	Screw clamping	1	**D7PA9**
	A	300	16	DIN rail/panel	12/14 (2) AWG, 4/2.5 (2) mm^2	Screw clamping	—	**D7PAD** ①
	A	300	16	DIN rail/panel	12/14 (2) AWG, 4/2.5 (2) mm^2	Screw clamping	—	**D7PAB** ①
Flange mount adapter	—	—	—	Flange	—	—	25	**PFC-D2D72**
	—	—	—	Flange	—	—	25	**PFC-D73**
	—	—	—	Flange	—	—	25	**PFC-D74**
Metal spring clip	—	—	—	—	—	—	25	**PQC-1342**
Plastic ID clip	—	—	—	—	—	—	10	**PQC-1349**
Metal spring clip	—	—	—	—	—	—	25	**PQC-1784**
Plastic ID clip	—	—	—	—	—	—	10	**PMC-1784**
Hold-down spring	—	—	—	—	—	—	25	**PYC-B2**
Metal spring clip	—	—	—	—	—	—	10	**PQC-1783**
Plastic ID clip	—	—	—	—	—	—	10	**PMC-1783**
Protection diode	A	6 to 250 Vdc	—	—	—	—	20	**MOD-AD250**
LED indicator	A	24 Vac/Vdc	—	—	—	—	20	**MOD-ALG24**
	A	120/240 Vac/Vdc	—	—	—	—	20	**MOD-ALG240**
MOV suppressor	A	120 Vac/Vdc	—	—	—	—	20	**MOD-AMV120**
	A	24 Vac/Vdc	—	—	—	—	20	**MOD-AMV24**
	A	240 Vac/Vdc	—	—	—	—	20	**MOD-AMV240**
R/C suppressor	A	6 to 24 Vac/Vdc	—	—	—	—	20	**MOD-RC24**
	A	110 to 240 Vac/Vdc	—	—	—	—	20	**MOD-RC240**
Protection diode	B	6 to 250 Vdc	—	—	—	—	20	**MOD-BD250**
LED indicator	B	24 Vac/Vdc	—	—	—	—	20	**MOD-BLG24**
	B	120/240 Vac/Vdc	—	—	—	—	20	**MOD-BLG240**
MOV suppressor	B	120 Vac/Vdc	—	—	—	—	20	**MOD-BMV120**
	B	24 Vac/Vdc	—	—	—	—	20	**MOD-BMV24**
	B	240 Vac/Vdc	—	—	—	—	20	**MOD-BMV240**
Plastic DIN rail end stop	—	—	—	—	—	—	25	**PFP-P**

Note

① Protection category (finger safe), EN 60529: IP20.

Technical Data and Specifications

D7PR Relay

Description	D7PR (DPDT)	D7PR (3PDT)	D7PR (4PDT)
Contact Characteristics			
Contact rating	15 A	15 A	15 A
Terminal style	Plug-in	Plug-in	Plug-in
Contact materials	Silver alloy	Silver alloy	Silver alloy
Maximum switching voltage	300 V	300 V	300 V
Switching current at voltage—resistive	15 A at 120 Vac 50/60 Hz	15 A at 120 Vac 50/60 Hz	15 A at 120 Vac 50/60 Hz
	12 A at 277 Vac 50/60 Hz	12 A at 277 Vac 50/60 Hz	12 A at 277 Vac 50/60 Hz
	10 A at 277 Vac 50/60 Hz	—	—
	12 A at 28 Vdc	12 A at 28 Vdc	12 A at 28 Vdc
Switching current at voltage	1/2 hp at 120 Vac	1/2 hp at 120 Vac	1/2 hp at 120 Vac
	1 hp at 250 Vac	3/4 hp at 250 Vac	3/4 hp at 250 Vac
Pilot duty	B300	B300	B300
Minimum switching requirement	100 mA at 5 Vdc (0.5 W)	100 mA at 5 Vdc (0.5 W)	100 mA at 5 Vdc (0.5 W)
Coil Characteristics			
Operating range			
% of nominal (AC)	85 to 110%	85 to 110%	85 to 110%
% of nominal (DC)	80 to 110%	80 to 110%	80 to 110%
Average consumption	1.2 VA	1.5 VA	1.5 VA
	0.9 W	1.4 W	1.5 W
Dropout voltage threshold	15% (AC)	15% (AC)	15% (AC)
	10% (DC)	10% (DC)	10% (DC)
Performance			
Electrical life (UL 508) operations at rated current	100,000 operations	200,000 operations	200,000 operations
Mechanical life operations unpowered	10,000,000 operations	10,000,000 operations	10,000,000 operations
Response time	20 ms	20 ms	20 ms
Dielectric strength			
Between coil and contact Vac (rms)	2500 V (rms)	2500 V (rms)	2500 V (rms)
Between poles Vac (rms)	1500 V (rms)	2500 V (rms)	2500 V (rms)
Environment			
Ambient air temperature around the device			
Operation	–40 °F to +131 °F (–40 °C to +55 °C)	–40 °F to +131 °F (–40 °C to +55 °C)	–40 °F to +131 °F (–40 °C to +55 °C)
Storage	–40 °F to +185 °F (–40 °C to +85 °C)	–40 °F to +185 °F (–40 °C to +85 °C)	–40 °F to +185 °F (–40 °C to +85 °C)
Vibration resistance—operational	3 g-n at 10–55 Hz	3 g-n at 10–55 Hz	3 g-n at 10–55 Hz
Shock resistance	10 g-n	10 g-n	10 g-n
Degree of protection	IP40	IP40	IP40
Features			
Cover options	Plain cover	Plain cover	Plain cover
Features	Mechanical flag indicator (optional LED)	Mechanical flag indicator (optional LED)	Mechanical flag indicator (optional LED)
Product certifications	RoHS/UL/CE/CSA	RoHS/UL/CE/CSA	RoHS/UL/CE/CSA

D7PF Relay

Description	D7PF (DPDT)	D7PF (3PDT)	D7PF (4PDT)
Contact Characteristics			
Contact rating	15 A	15 A	15 A
Terminal style	Plug-in	Plug-in	Plug-in
Contact materials	Silver alloy	Silver alloy	Silver alloy
Maximum switching voltage	300 V	300 V	300 V
Switching current at voltage—resistive			
	15 A at 120 Vac 50/60 Hz	15 A at 120 Vac 50/60 Hz	15 A at 120 Vac 50/60 Hz
	12 A at 277 Vac 50/60 Hz	12 A at 277 Vac 50/60 Hz	12 A at 277 Vac 50/60 Hz
	10 A at 277 Vac 50/60 Hz	—	—
	12 A at 28 VDC	12 A at 28 Vdc	12 A at 28 Vdc
Switching current at voltage	1/2 hp at 120 Vac	3/4 hp at 250 Vac	1/2 hp at 120 Vac
	1 hp at 250 Vac	1/2 hp at 120 Vac	3/4 hp at 250 Vac
Pilot duty	B300	B300	B300
Minimum switching requirement	100 mA at 5 Vdc (0.5 W)	100 mA at 5 Vdc (0.5 W)	100 mA at 5 Vdc (0.5 W)
Coil Characteristics			
Operating range			
% of nominal (AC)	85 to 110%	85 to 110%	85 to 110%
% of nominal (DC)	80 to 110%	80 to 110%	80 to 110%
Average consumption	1.2 VA	1.5 VA	1.5 VA
	0.9 W	1.4 W	1.5 W
Dropout voltage threshold	15% (AC)	15% (AC)	15% (AC)
	10% (DC)	10% (DC)	10% (DC)
Performance			
Electrical life (UL 508) operations at rated current	100,000 operations	200,000 operations	200,000 operations
Mechanical life operations unpowered	10,000,000 operations	10,000,000 operations	10,000,000 operations
Response time	20 ms	20 ms	20 ms
Dielectric strength			
Between coil and contact Vac (rms)	2500 V (rms)	2500 V (rms)	2500 V (rms)
Between poles Vac (rms)	1500 V (rms)	2500 V (rms)	2500 V (rms)
Environment			
Ambient air temperature around the device			
Operation	–40 °F to +131 °F (–40 ° to 55 °C)	–40 °F to +131 °F (–40 ° to 55 °C)	–40 °F to +131 °F (–40 ° to 55 °C)
Storage	–40 °F to +185 °F (–40 ° to 85 °C)	–40 °F to +185 °F (–40 ° to 85 °C)	–40 °F to +185 °F (–40 ° to 85 °C)
Vibration resistance—operational	3 g-n at 10–55 Hz	3 g-n at 10–55 Hz	3 g-n at 10–55 Hz
Shock resistance	10 g-n	10 g-n	10 g-n
Degree of protection	IP40	IP40	IP40
Features			
Cover options	Full featured	Full featured	Full featured
Features	Locking pushbutton/ Bipolar LED/ Removable ID tag/ Mechanical flag indicator	Locking pushbutton/ Bipolar LED/ Removable ID tag/ Mechanical flag indicator	Locking pushbutton/ Bipolar LED/ Removable ID tag/ Mechanical flag indicator
Product certifications	RoHS/UL/CE/CSA	RoHS/UL/CE/CSA	RoHS/UL/CE/CSA

Wiring Diagrams

D7PR2/D7PF2

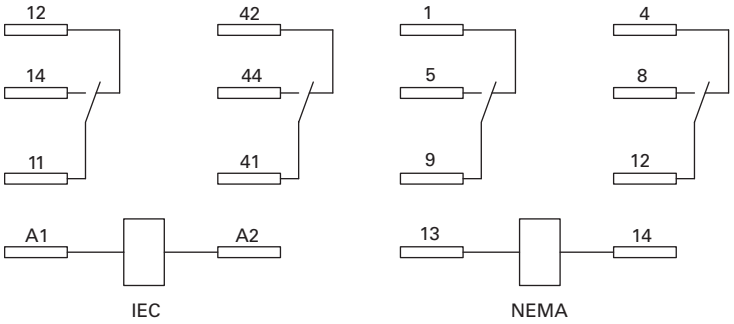

D7PR3/D7PF3

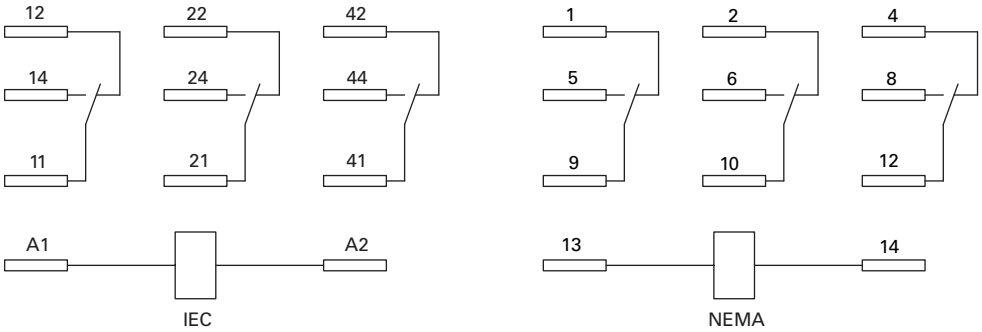

D7PR4/D7PF4

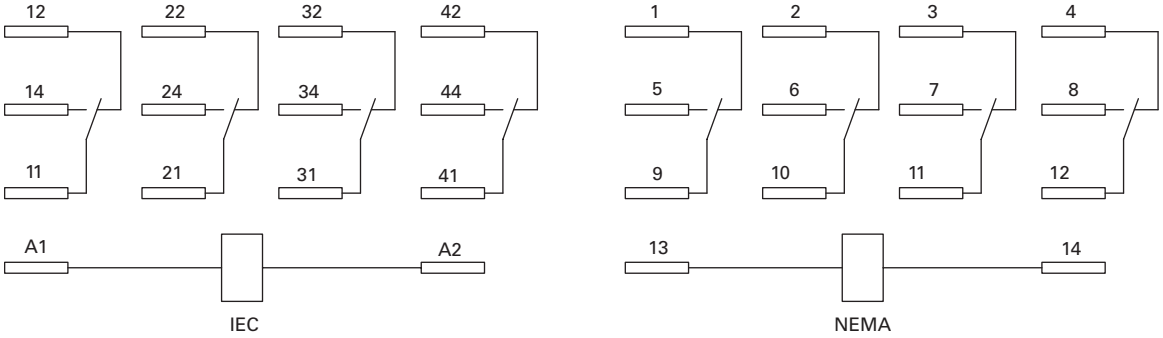

Dimensions

Approximate Dimensions in Inches (mm)

D7PR1/D7PF1

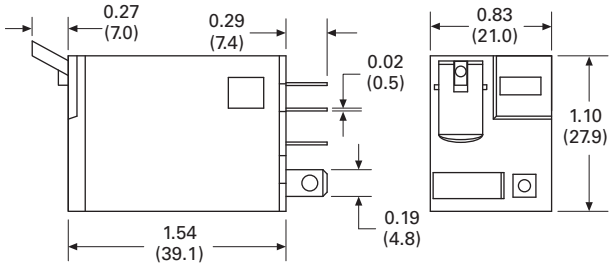

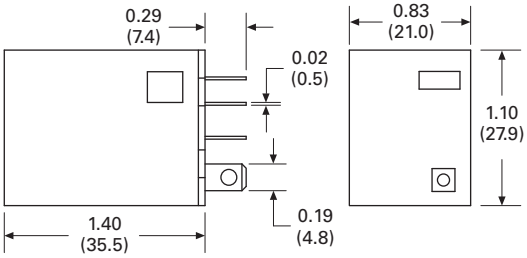

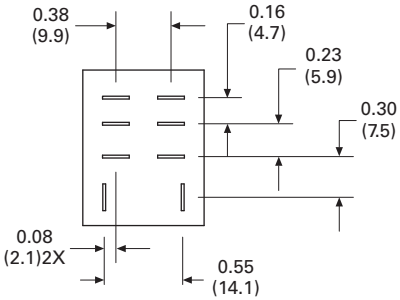

D7PR2/D7PF2

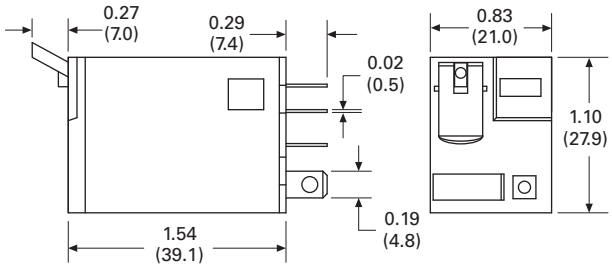

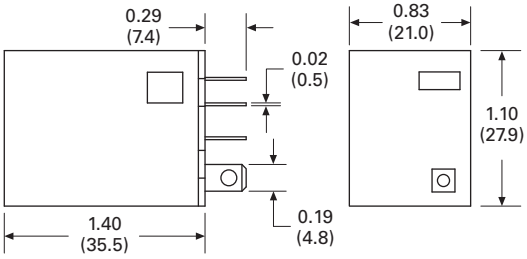

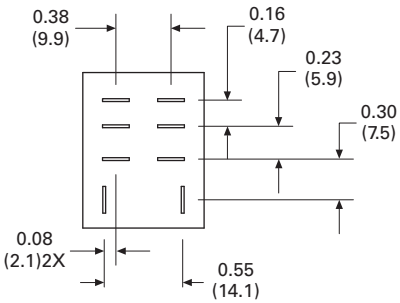

Approximate Dimensions in Inches (mm)

D7PR3/D7PF3

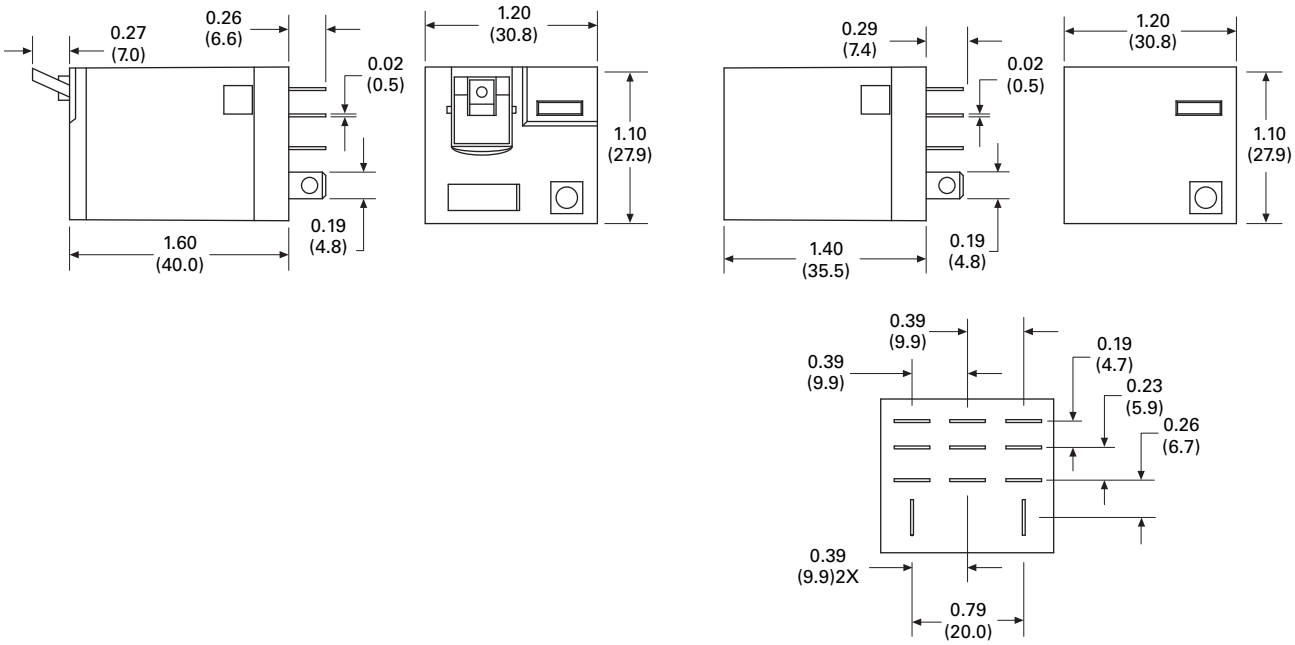

D7PR4/D7PF4

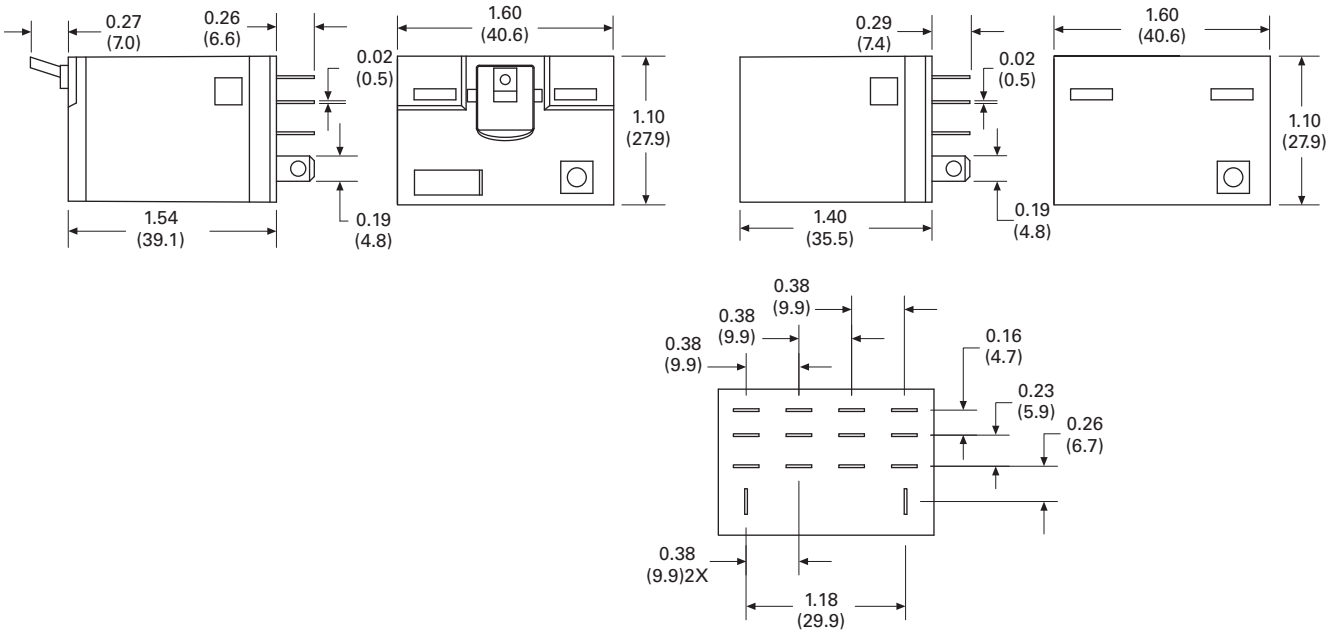

Approximate Dimensions in Inches (mm)

D7PA3

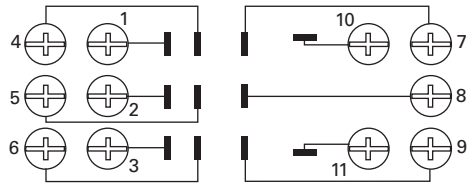

Wiring Diagram (Top View)

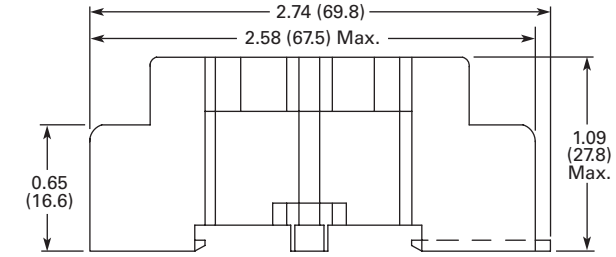

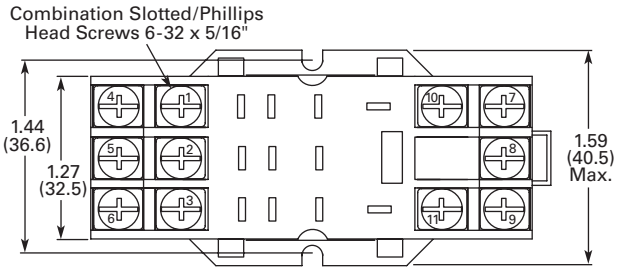

D7PA4

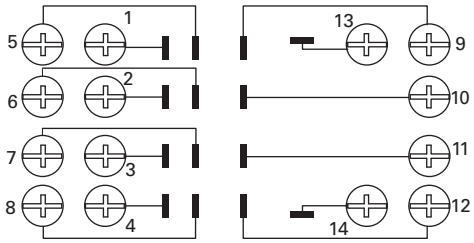

Wiring Diagram (Top View)

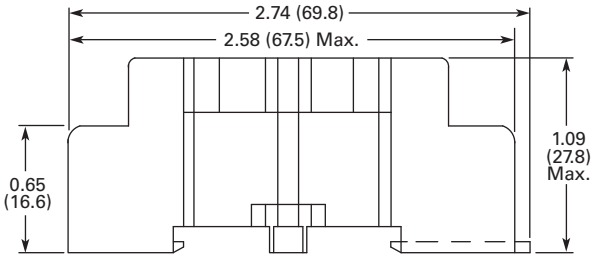

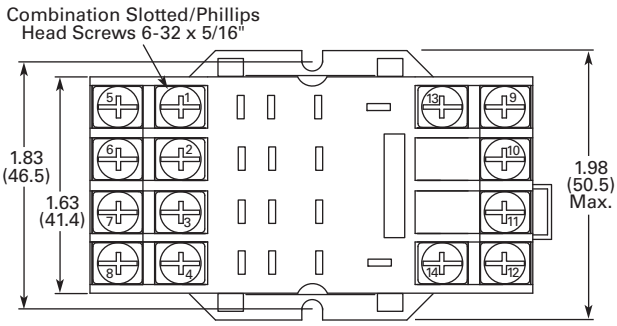

Approximate Dimensions in Inches (mm)

D7PA9 Standard Mount

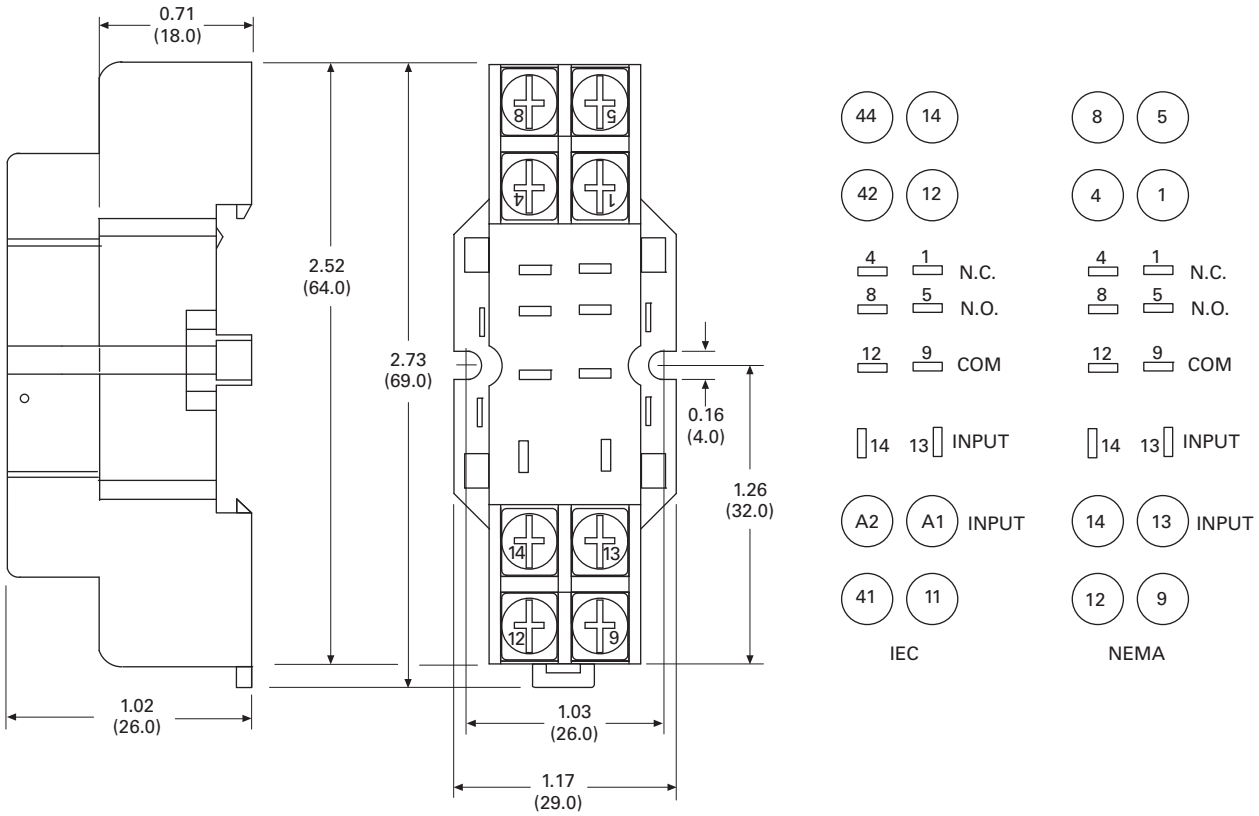

Approximate Dimensions in Inches (mm)

D7PAA

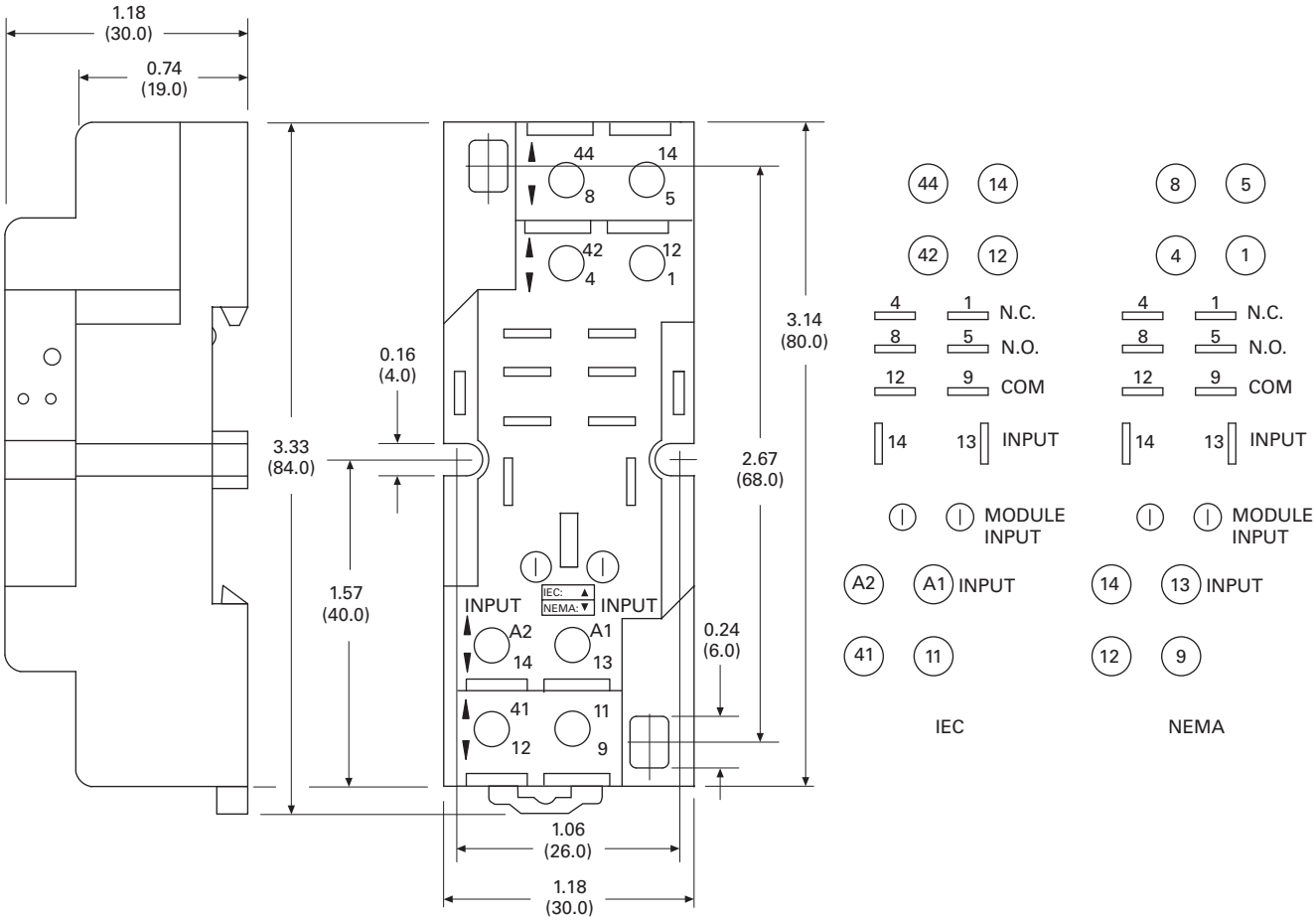

Approximate Dimensions in Inches (mm)

D7PAB

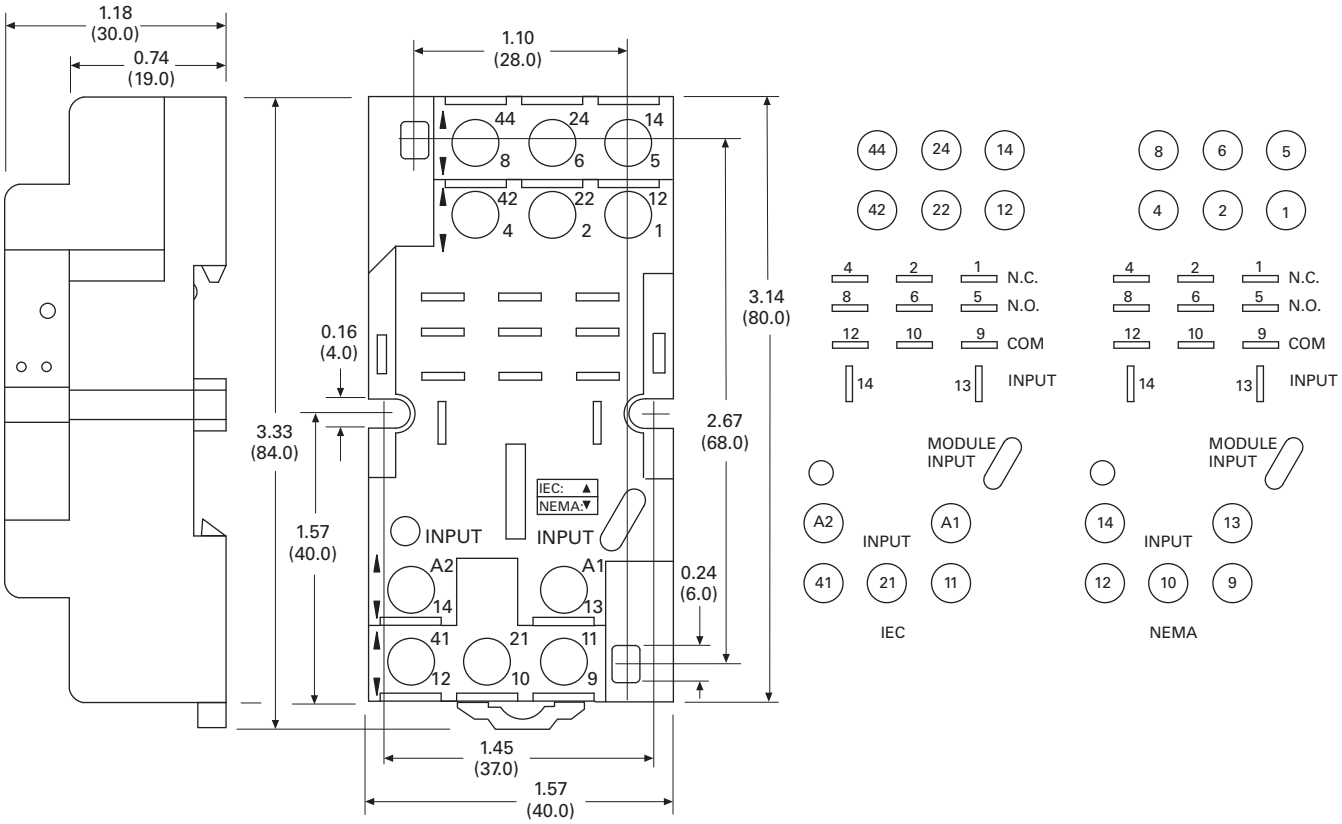

Approximate Dimensions in Inches (mm)

D7PAD

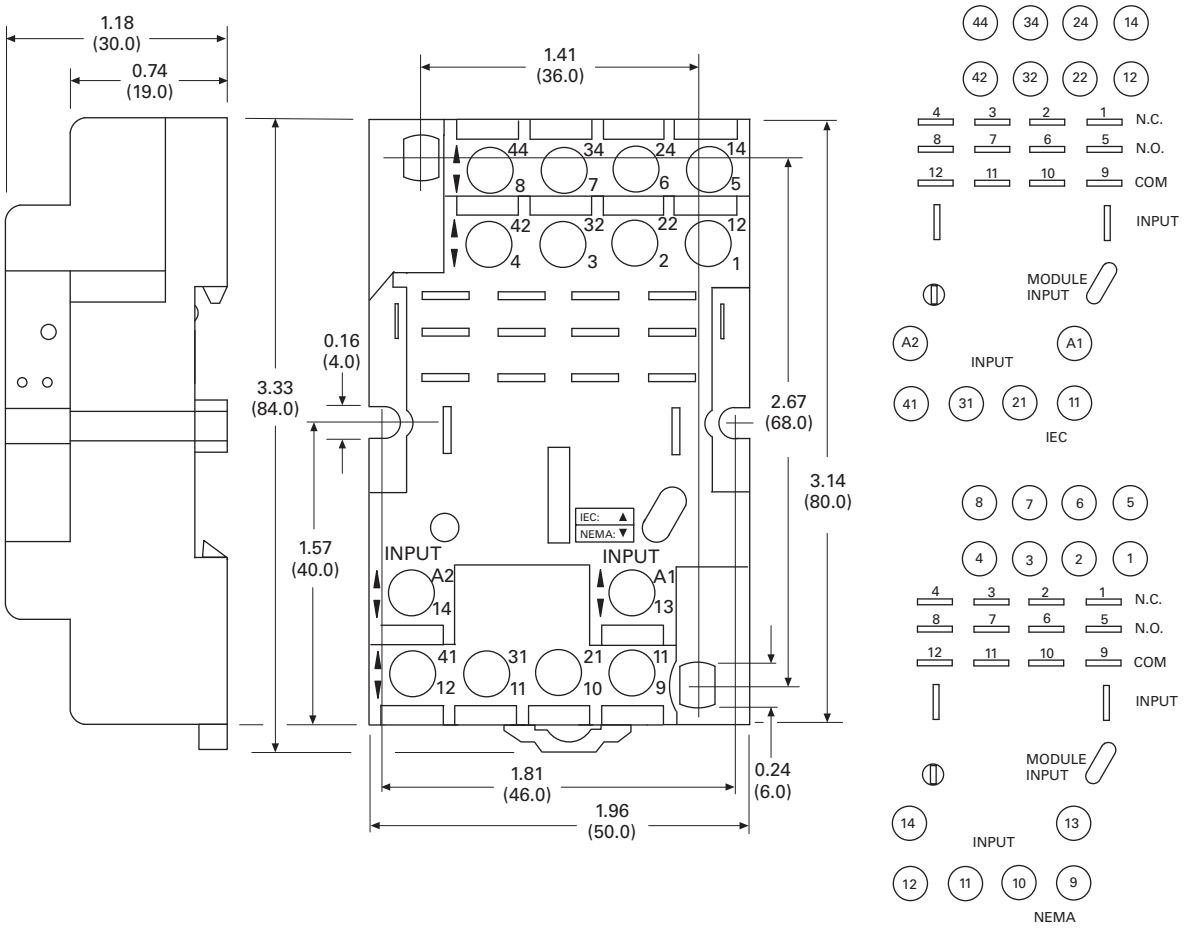

D8 Series Relay

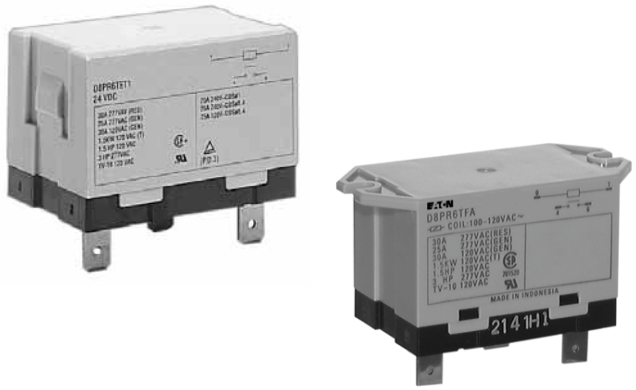

Contents

Description	*Page*
D1RR/D1RF Series	**V7-T3-53**
D2RR/D2RF Series	**V7-T3-57**
D3RR/D3RF Series	**V7-T3-67**
D4 Series	**V7-T3-76**
D5RR/D5RF Series	**V7-T3-80**
D7PR/D7PF Series	**V7-T3-89**
D8 Series	
Catalog Number Selection	**V7-T3-104**
Product Selection	**V7-T3-104**
Technical Data and Specifications	**V7-T3-105**
Dimensions	**V7-T3-105**
D9 Series	**V7-T3-108**
Accessories	**V7-T3-112**

D8 Series

Product Description

The D8 Series power relays are perfect for loads up to 30 A, with versions for flange mounting and e-clip mounting available.

Features

- Allows switching of 25 A and 30 A loads
- A high-capacity, high-withstand voltage relay compatible with momentary voltage drops
- No contact chattering for momentary voltage drops up to 50% of rated voltage
- UL Class B construction standard
- Wide-range AC-activated coil that handles 100 to 120 Vac at either 50 or 60 Hz
- Panel, DIN rail and flange mounting

Standards and Certifications

File # E1491

File # LR701520

Catalog Number Selection

D8 Series ①

D8PR 6 TE A

Family Type
D8PR

Contact Configuration
6 = SPST-NO
7 = DPST-NO

Options
TE = E-bracket
TF = Flange mount

Coil Voltage
A = 120 Vac
B = 240 Vac
R1 = 12 Vdc
T = 24 Vac
T1 = 24 Vdc

Product Selection

D8 Relay/Socket Quick Reference

Relay Type	Mounting Bracket	Adapter Track/ Panel Mount	Front Connecting Sockets Track/ Panel Mount
D8PR6TE	D8PA5	D8PA1	D8PA2
D8PR7TE	D8PA5	D8PA1	D8PA2

D8 Series Relay

D8 Series ②

Type	Standard Pack	Catalog Number
SPST E-Bracket		
Coil voltage		
24 Vac	1	**D8PR6TET**
24 Vdc	1	**D8PR6TET1**
SPST Flange Mount		
120 Vac	1	**D8PR6TFA**
24 Vdc	1	**D8PR6TFT1**
DPST E-Bracket		
Coil voltage		
120 Vac	1	**D8PR7TEA**
DPST Flange Mount		
120 Vac	1	**D8PR7TFA**
24 Vdc	1	**D8PR7TFT1**
Sockets		
DIN rail adapter	10	**D8PA1**
Screw terminal adapter	10	**D8PA2**
Bracket adapter	10	**D8PA5**
Accessory		
DIN rail end stop	100	**PFP-M**

Notes

① For deciphering catalog numbers. Do not use for ordering as not all combinations are readily available.
② Additional coil voltages available—consult Sales Office or Customer Support Center.

Technical Data and Specifications

Coil Resistance

Coil Voltage	Ohms	mA
24 Vac	303	71
110/120 Vac	5260	20.4
220/240 Vac	21,000	10.2
12 Vdc	75	158
24 Vdc	303	79

D8 Relays

Description	D8PR6	D8PR7
Rated load	220 Vac 30 A	220 Vac 25 A
Carry current	30 A	25 A
Max. operating voltage	250 Vac	250 Vac
Max. switching current	30 A	25 A
Contact material	AgCdO	AgCdO
Max. switching capacity	6600 VA	5500 VA
Min. permissible load	100 mA at 5 Vdc	100 mA at 5 Vdc
Mechanical life (min.)	5,000,000 operations	5,000,000 operations
Electrical life at all contact ratings (min.)	100,000 operations	100,000 operations
Maximum hp ratings	1-1/2 hp (120 Vac) 3 hp (240/265/277 Vac)	1-1/2 hp (120 Vac) 3 hp (240/265/277 Vac)

Coil Data

Coil Voltage	Must Operate	Must Release	Maximum Voltage
24 Vdc/Vac, 12 Vdc	75% maximum	15% minimum	110%
120 Vac	75 V	18 V	132 V
240 Vac	150 V	36 V	264 V

Dimensions

Approximate Dimensions in Inches (mm)

D8PR6TF

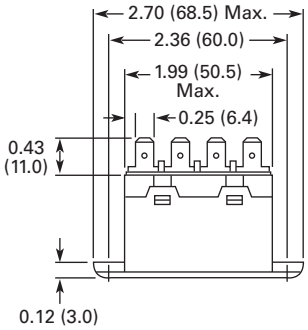

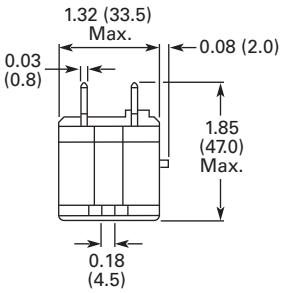

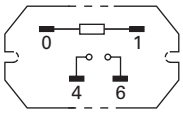

Terminal Arrangement/ Internal Connections (Top View)

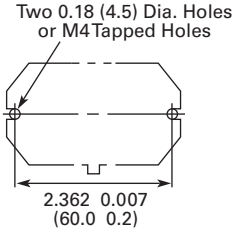

Mounting Holes (Bottom View)

Approximate Dimensions in Inches (mm)

D8PR7TF

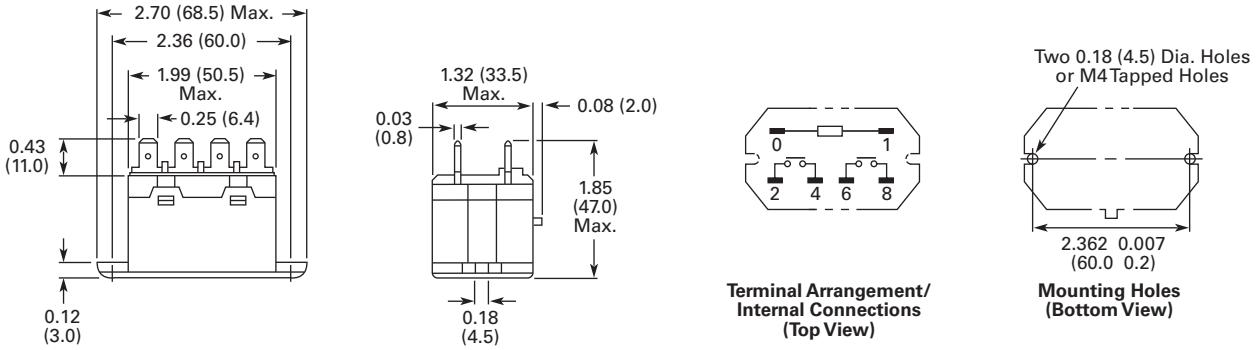

D8PR6TE with D8PA5 Bracket Attached

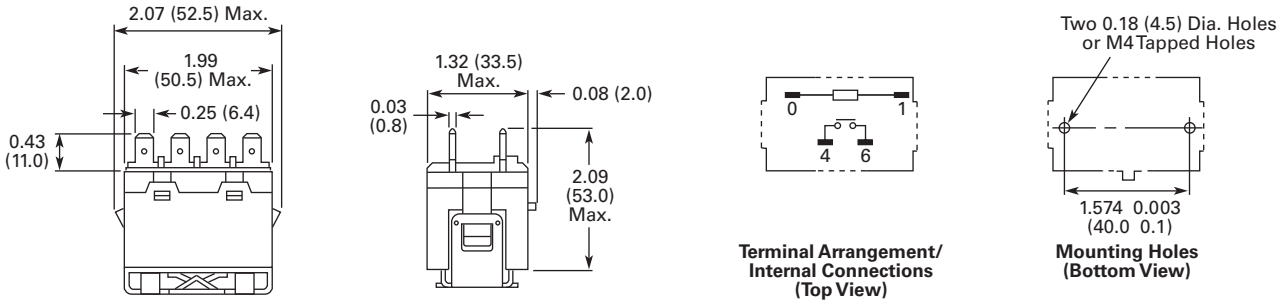

D8PR7TE with D8PA5 Bracket Attached

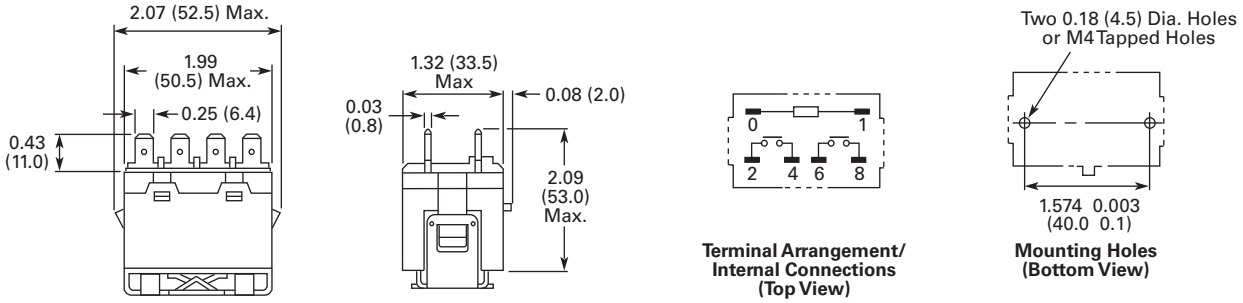

D8PA1

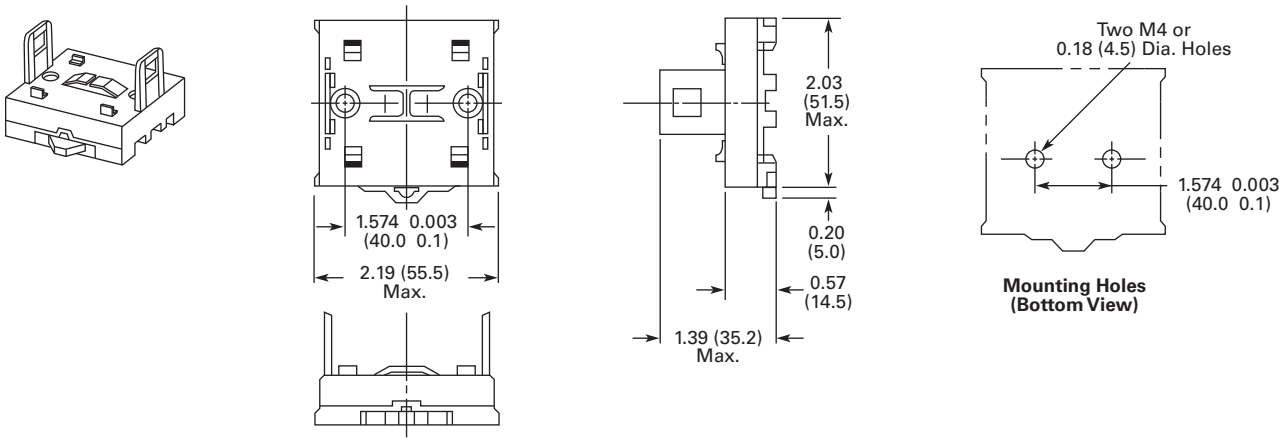

Note: Minimum spacing around relay = 0.20 inches (5 mm).

Approximate Dimensions in Inches (mm)

D8PA2

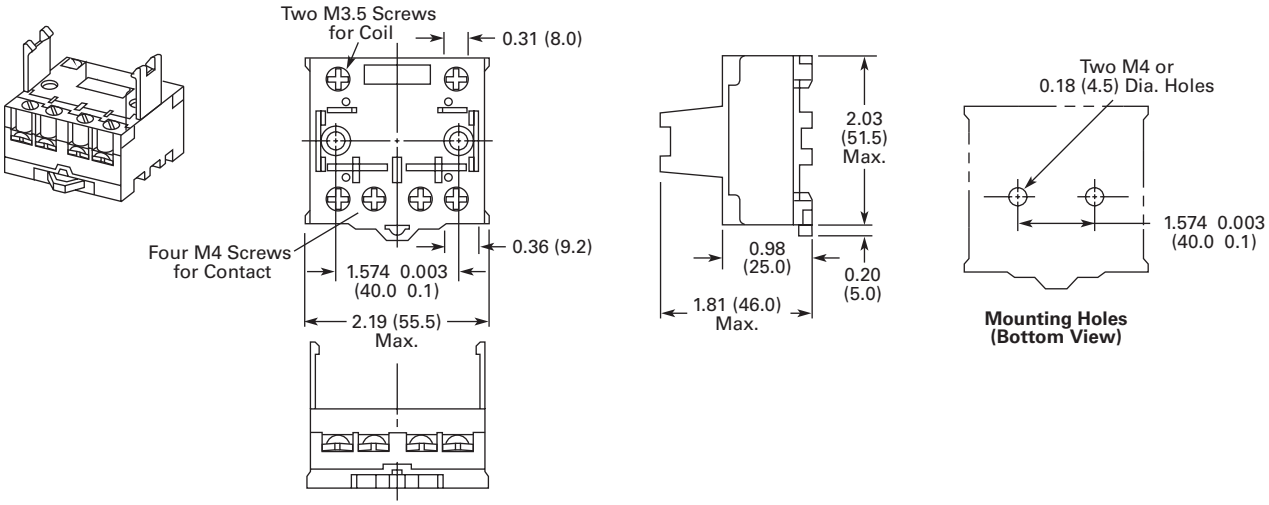

D8PA5

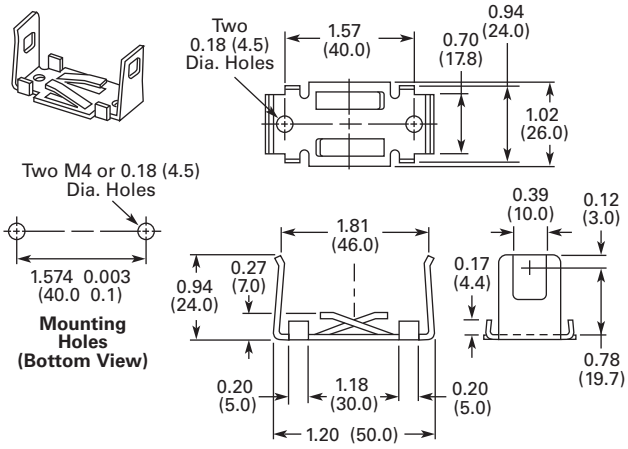

PFP-M DIN Rail End Stop

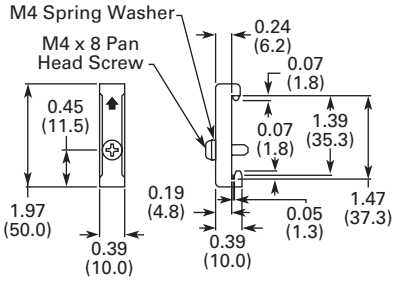

D9 Series Relay

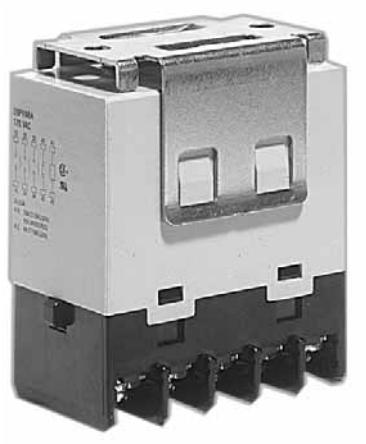

Contents

Description	*Page*
D1RR/D1RF Series	**V7-T3-53**
D2RR/D2RF Series	**V7-T3-57**
D3RR/D3RF Series	**V7-T3-67**
D4 Series	**V7-T3-76**
D5RR/D5RF Series	**V7-T3-80**
D7PR/D7PF Series	**V7-T3-89**
D8 Series	**V7-T3-103**
D9 Series	
Product Selection	**V7-T3-109**
Technical Data and Specifications	**V7-T3-109**
Dimensions	**V7-T3-110**
Accessories	**V7-T3-112**

D9 Series

Product Description

The four-pole D9 Series is ideal for three-phase motor applications. Various contact configurations are available.

Features

- Ideal for three-phase motor control applications
- No contact chattering for momentary voltage drops up to 50% of rated voltage
- Push-to-Test button is a standard feature to check contact operation
- Mounting bracket is supplied with relay

Standards and Certifications

File # E1491

File # LR701520

Catalog Number Selection

D9PR 8B A

Family Type
D9PR

Contact Configuration
8B = 4PST-NO
9B = 3PST-NO/SPST-NC
10B = DPST-NO/DPST-NC

Coil Voltage
A = 120 Vac
B = 240 Vac
R1 = 12 Vdc
T = 24 Vac
T1 = 24 Vdc

Product Selection

D9 Series

	Catalog Number
4PST-NO Power Relay	
Coil voltage	
24 Vac	**D9PR8BT**
120 Vac	**D9PR8BA**
240 Vac	**D9PR8BB**
24 Vdc	**D9PR8BT1**
3PST-NO/SPST-NC Power Relay	
120 Vac	**D9PR9BA**

	Catalog Number
DPST-NO/DPST-NC Power Relay	
Coil voltage	
24 Vac	**D9PR10BT**
120 Vac	**D9PR10BA**
24 Vac	**D9PR10BT1**

Technical Data and Specifications

Coil Resistance

Coil Voltage	Ohms	mA
24 Vac	—	75
120 Vac	—	21.6
240 Vac	—	10.8

Coil Voltage	Ohms	mA
12 Vdc	72	167
24 Vdc	288	83
110 Vdc	6050	18

D9PR Specifications

Description	NO Contacts Resistive Load (p.f. = 1)	NC Contacts Resistive Load (p.f. = 1)
Rated load	220 Vac 25 A 30 Vdc 25 A	220 Vac 8 A 30 Vdc 8 A
Carry current	25 A	8 A
Max. operating voltage	250 Vac/125 Vdc	250 Vac/125 Vdc
Max. switching current	25 A	8 A
Max. switching capacity	5500 VA 750 W	1760 VA 240 W
Min. permissible load	100 mA at 24 Vdc	100 mA at 24 Vdc
Mechanical life (min.)	1,000,000 operations	1,000,000 operations
Electrical life at all contact ratings (min.)	100,000 operations	100,000 operations
Maximum hp ratings	1-1/2 hp (120 Vac) 3 hp (240/265/277 Vac) Three-phase 3 hp (240/265/277 Vac) 30,000 cycles Three-phase 5 hp (240/265/277 Vac) 30,000 cycles	1-1/2 hp (120 Vac) 3 hp (240/265/277 Vac) Three-phase 3 hp (240/265/277 Vac) 30,000 cycles Three-phase 5 hp (240/265/277 Vac) 30,000 cycles

Coil Data

Coil Voltage	Must Operate	Must Release	Maximum Voltage
24 Vdc/Vac, 12 Vdc, 110 Vdc	75% maximum	10% minimum	110%
120 Vac	75 V	18 V	132 V
240 Vac	150 V	36 V	264 V

Terminal Arrangements

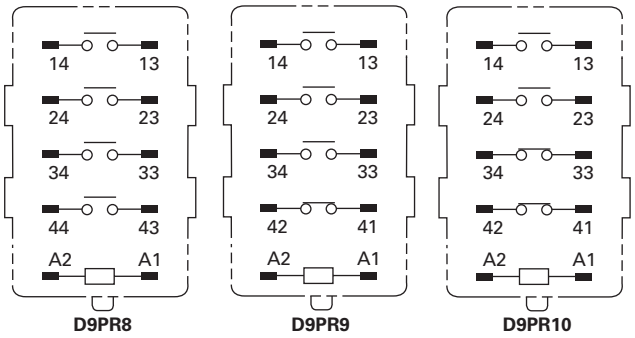

Dimensions

Approximate Dimensions in Inches (mm)

D9PR

Screw Terminal Brackets

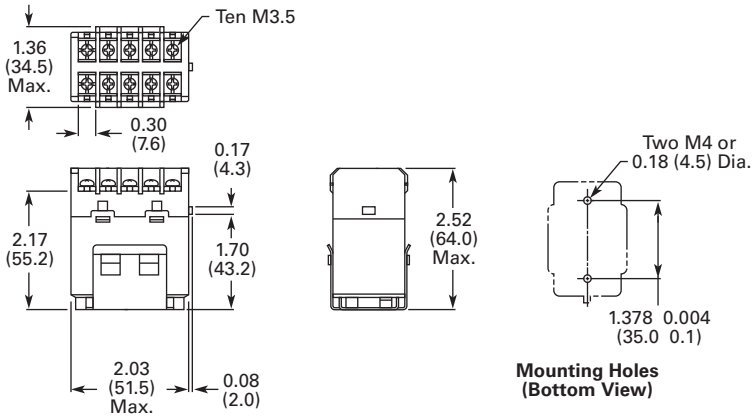

Approximate Dimensions in Inches (mm)

Mounting Bracket

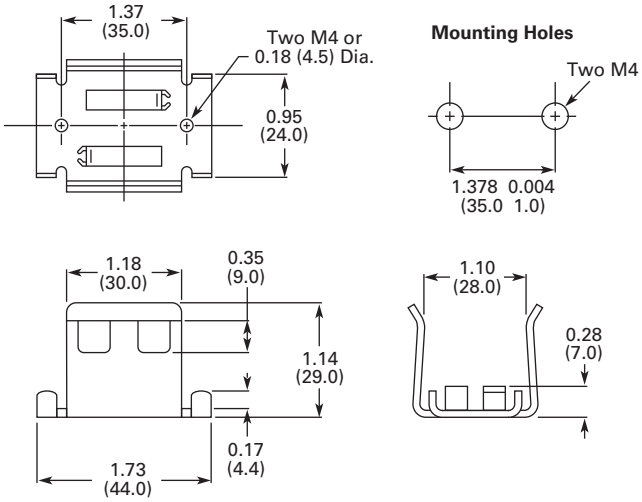

Accessories

Contents

Description	*Page*
D1RR/D1RF Series	**V7-T3-53**
D2RR/D2RF Series	**V7-T3-57**
D3RR/D3RF Series	**V7-T3-67**
D4 Series	**V7-T3-76**
D5RR/D5RF Series	**V7-T3-80**
D7PR/D7PF Series	**V7-T3-89**
D8 Series	**V7-T3-103**
D9 Series	**V7-T3-108**
Accessories	
MOD Modules	**V7-T3-113**
Relay Clips	**V7-T3-114**
Coil Bus Jumpers	**V7-T3-116**
Write-On Plastic Labels/ID Tags	**V7-T3-116**
Flange Mount Adapters	**V7-T3-117**

Accessories

Accessories Selection Guide

Eaton offers a variety of simple-to-install relay accessories that allow you to customize the features of a relay system to meet your exact needs.

The MOD Module System

Eaton's plug-in modules are a simple way to add functionality to your relay without the hassle of messy wiring and additional mounting of external electronics. They are available in a variety of configurations to meet the needs of almost any application.

Circuit Diagrams

Diode Circuit

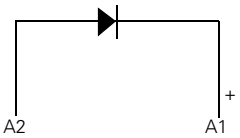

The diode module protects external drive circuitry from inductive voltages generated when removing coil voltages.

LED Circuit

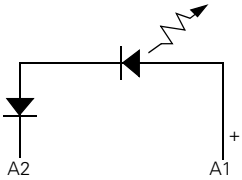

The LED status lamp verifies that power is being supplied to the coil. Ideal for both AC and DC applications. Polarity sensitive for DC applications.

RC Circuit

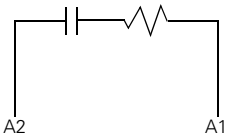

Snubs back EMF of relay coil.

Metal Oxide Varistor (MOV) Circuit

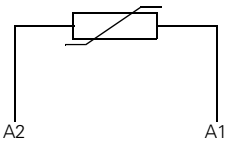

The MOV circuit protects by shunting potentially damaging electrical spikes away from the relay coil. Ideal for AC and DC applications.

System Diagrams

The MOD Module System

MOD Modules

Eaton's relay accessories provide a complete solution for add-on modules and identification tags.

MOD Modules

	Module Size	Description	Nominal Voltage	Catalog Number	Mating Sockets
MOD-AD250	A	Protection diode	6–250 Vdc	**MOD-AD250**	D3PA6, D3PAL8, D3PA7, D3PAL11, D5PAL, D7PAB, D7PAD
MOD-RC_		R/C suppressor	6–24 Vac	**MOD-RC24**	
			110–240 Vac	**MOD-RC240**	
MOD-ALG_		LED indicator	24 Vac	**MOD-ALG24**	
			120/240 Vac	**MOD-ALG240**	
MOD-AMV_		MOV suppressor	24 Vac	**MOD-AMV24**	
			120 Vac	**MOD-AMV120**	
			240 Vac	**MOD-AMV240**	
MOD-BD250	B	Protection diode	6–250 Vdc	**MOD-BD250**	D1RAA, D2PAL, D2PAP, D2PA7, D7PAA
MOD-BLG_		LED indicator	24 Vac	**MOD-BLG24**	
			120/240 Vac	**MOD-BLG240**	
MOD-BMV_		MOV suppressor	24 Vac	**MOD-BMV24**	
			120 Vac	**MOD-BMV120**	
			240 Vac	**MOD-BMV240**	

Relay Clips

Eaton offers a variety of relay clips designed to improve the performance and functionality within an electrical panel.

Metal Hold-Down Clips

Metal hold-down clips, or spring clips, are ideal for use where high heat or humid conditions are a factor. These clips hold their shape and tension and are designed to withstand harsh environments. All clips are made of corrosion-resistant stainless steel.

Metal Hold-Down Clips

	Catalog Number	Mating Sockets	Mating Relays
PMC-1781	PMC-1781	D1RAA	D1RR, D1RF
PQC-1782	PQC-1782	D2PAL, D2PAP, D2PA7	D2RR2, D2RF2, D2RR3, D2RF4
PQC-1342	PQC-1342	D2PA6, D7PAA, D7PA9	D2RR4, D2RF4
PQC-1332 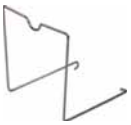	PQC-1332	D3PA6, D3PA7	D3RR2, D3RF2, D3RR3, D3RF3
PQC-1351	PQC-1351	D3PAL8, D3PA2, D3PAL11, D3PA3, D5PAL, D5PA2, D5PA3L, D5PA3S	D3RR2, D3RF2, D3RR3, D3RF4, D5RR, D5RF
PQC-1783	PQC-1783	D7PAB	D7PR1, D7PF1, D7PR2, D7PF3
PQC-1784	PQC-1784	D7PAD	D7PR4, D7PF4
PYC- _	PYC-B2	D7PA3, D7PA4	D7PR1, D7PR2, D7PR4

Plastic Ejector/ Hold-Down Clips

These clips are great for applications where sockets are located in dense or tight areas. They allow for quick, safe and firm securing of relays in the sockets with the added benefit that the relay can be ejected with one finger. Plastic clips also aid in keeping operators' fingers away from live circuits. The optional snap-in identification tag allows for custom marking of sockets when used in multi-socket applications.

Plastic ID Clips

Plastic ID clips allow for easy circuit identification in multi-relay applications. They are designed for labeling and are not ideal for securing the relay in the socket.

PWC-D24

Plastic Ejector/Hold-Down Clips

Catalog Number	Mating Sockets	Mating Relays
PWC-D24	D2PAL, D2PAP, D2PA7	D2RF2, D2RF4

Plastic ID Clips

PQC-1349

PMC-1783

PMC-1784

Catalog Number	Mating Sockets	Mating Relays
PQC-1349	D7PAA	D7PF1, D7PF2
PMC-1783	D7PAB	D7PF1, D7PF2
PMC-1784	D7PAD	D7PF4

Coil Bus Jumpers

Eaton's coil bus jumpers allow inputs to be bridged to adjacent sockets without additional wiring, making multi-relay connections quick and easy. The easy-to-install design requires no tools and can be complete in a matter of seconds.

System Diagrams

Coil Bus Jumpers ①

Write-On Plastic Labels/ID Tags

These convenient plastic labels snap easily onto the relay socket for clear identification in multi-relay panels. The hinged design makes wiring simple and allows for angular adjustment of the tag to improve readability in the panel. Marking with a standard permanent marker creates a smudge-free surface.

Coil Bus Jumpers

	Catalog Number	Mating Sockets
D2PJ1	D2PJ1	D2PAL, D2PAP
D3PJ1	D3PJ1	D3PA6, D3PA7, D5PAL

Write-On Plastic Labels/ID Tags

	Catalog Number	Mating Sockets
PWF-D2P	PWF-D2P	D2PAL, D2PAP
PWF-D3D5	PWF-D3D5	D3PAL8, D3PAL11, D5PAL

Note

① Jumpers in photo are colored green to improve visibility, actual jumpers are black.

Flange Mount Adapters

Eaton's relay flange mount adapters create a modular approach to flexible mounting options. Each low-cost adapter allows for panel mounting of a standard control relay and can eliminate the need for a socket.

Unit with Flange Mount Adapter

Flange Mount Adapters

	Catalog Number	Mating Relay
PFC-D11	**PFC-D11**	D1RF1, D1RR1
PFC-D2D72	**PFC-D2D72**	D2P, D7PF2, D7PR2
PFC-D73	**PFC-D73**	D7PF3, D7PR3
PFC-D74	**PFC-D74**	D7PF4, D7PR4

9575H Series 3000 Relay

Contents

Description	*Page*
9575H Series 3000—Type AA, AC and DC	
Product Selection	**V7-T3-119**
Accessories	**V7-T3-119**
Technical Data and Specifications	**V7-T3-120**
Dimensions	**V7-T3-121**

9575H Series 3000—Type AA, AC and DC

Product Description

Type AA panel-mounted relays are rated (each pole) 40 A up to 300 Vac, 50/60 Hz; 5 A at 480/600 Vac, 50/60 Hz and 40 A at 28 Vdc.

Application Description

9575H Series 3000 relays are ideal for applications when controlling smaller loads, such as single-phase motors.

Standards and Certifications

- UL listed, E1491
- CSA 41729
- CE: EN60947-4-1, EN60947-5-1

Product Selection

When Ordering, Specify

Catalog number and magnet coil code letter. Example: for DPDT relay with auxiliary switch and a 120 V 50/60 Hz coil, order Catalog Number 9575H3A010.

9575H Series 3000 Relay

Type AA Relays ①

Relay Style	Catalog Number ②
Relay (DPDT)	**9575H3_000**
Relay with auxiliary switch	**9575H3_010**
Relay with blowout magnets	**9575H3_100**
Relay with auxiliary switch and blowout magnets	**9575H3_110**

Coil Voltage Selection

Coil Voltage	Hz	Suffix Code
Volts AC		
120	50/60	**A**
240	50/60	**B**
480/440	60/50	**C**
600/550	60/50	**D**
208	50/60	**E**
277	50/60	**H**
6	50/60	**J**
12	50/60	**K**
24	50/60	**L**
48	50/60	**M**
Volts DC		
110	—	**P**
220	—	**Q**
6	—	**R**
12	—	**S**
24	—	**T**
48	—	**W**

Accessories

Enclosure ③

Description	Catalog Number
NEMA 1 Enclosure	**9575H2449**

Notes

① There are no "repair parts" available for these relays.

② Underscore indicates missing code suffix for magnet coil—see Selection table above.

③ Only 9575H3 relays without an auxiliary switch should be mounted in the 9575H2449 enclosure.

Technical Data and Specifications

Relay Specifications

Coil

- Pull-in voltage: 80% DC coils, 85% AC coils of nominal voltage or less at 25°C
- Dropout voltage: 10% of nominal voltage or more at 25°C
- Coil resistance: ±10% measured at 25°C
- Max. DC coil dissipation capability: 4 watts DC continuous at 25°C

Contacts

- Contact combination: DPDT
- Contact rating each pole (main contacts): Each pole rated 40 amps up to 300 Vac, 50/60 Hz, 5 amps at 480/600 Vac 50/60 Hz, 0.75 PF load. 1-1/2 hp motor load (each pole) at 120–600 Vac, 50/60 Hz. 2 hp motor load at 200–600 Vac, 50/60 Hz only when using both poles to switch both sides of load, 40 amps at 28 Vdc resistive load each pole. NEMA A 600 pilot duty 50/60 Hz
- Additional contact ratings for relays with blowout magnets: 10 A at 110 Vdc resistive, 4 A at 225 Vdc resistive, 2 A at 325 Vdc resistive. For inductive loads, contacts must be derated accordingly.
- Contact material: Silver cadmium oxide, gold flashed. 5/16 in (7.9 mm) diameter standard

Dielectric Withstanding Voltage

- Between open contacts: 1500 V_{rms}
- All other mutually insulated conductive elements: 2200 V_{rms}

Miscellaneous

- Coil terminals: 6–32 screws
- Contact terminals: 8—32 screws
- Main base material: Molded phenolic, UL recognized (QMFZ2)
- Weight (DPDT Relay): 11 oz (311 grams) approximately
- Weight (DPDT Relay with auxiliary switch) 14.5 oz (411 grams) approximately

Auxiliary Switch Specifications

- Contact combination: SPDT
- Contact rating: Auxiliary switch rated 10 amps at 125 or 250 Vac, resistive load; 1/4 hp at 125 or 250 Vac, motor load; 0.4 amps at 125 Vdc or 0.20 amps at 250 Vdc, resistive load; 3 amps at 125 Vac lamp load. All AC ratings are 50/60 Hz
- Dielectric withstanding voltage: 500 Vac rms between open contacts, 1500 Vac rms between all other mutually insulated conductive elements
- Terminals: 4–40 round head screws for auxiliary contacts standard

Average Operating Times (Milliseconds)

Operation	DPDT Relay	DPDT Relay with Auxiliary Switch
Pickup	40	50
Dropout	35	35

Temperature Ranges

Temperature	AC	DC
Operating range	–30 °C to +55 °C	–30 °C to +55 °C
Non-operating range	–30 °C to +100 °C	–30 °C to +100 °C

Dimensions

Approximate Dimensions in Inches (mm)

9575H3 DPDT Relay

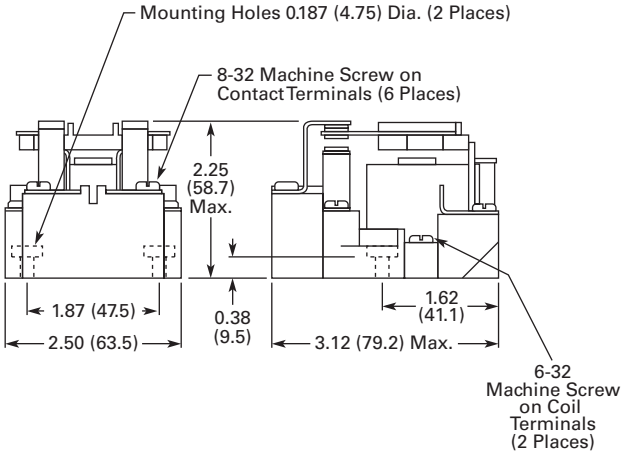

9575H3 DPDT Relay with Auxiliary SPDT Switch

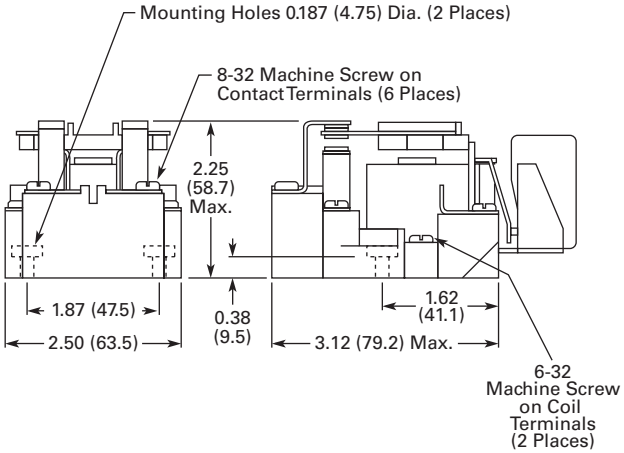

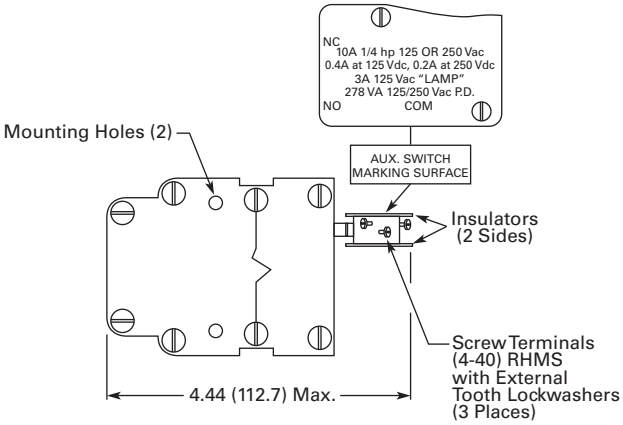

RELAY TOP VIEW

9575H2449

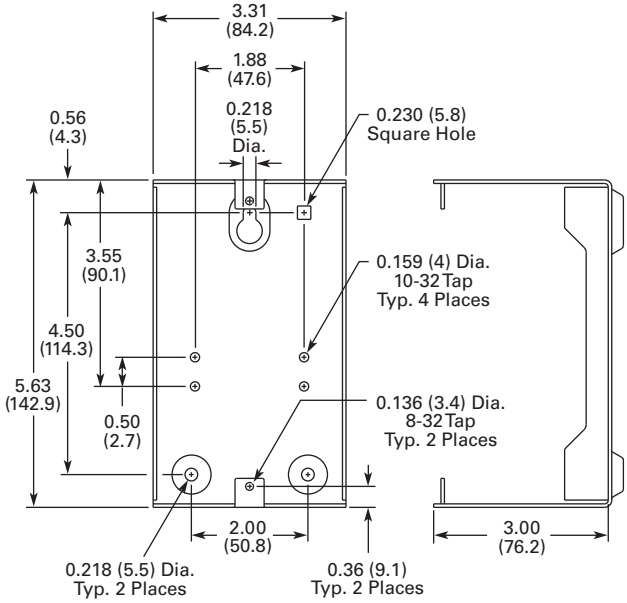

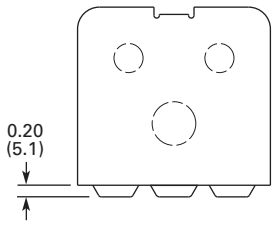

Solid-State Relays

Contents

Description	*Page*
Solid-State Relays	
D93 Series	**V7-T3-123**
D96 Series	**V7-T3-130**
D99 Series	**V7-T3-135**

Product Overview

Catalog Number Selection

Solid-State Relays—D93, D96 and D99 Series

D93 3 25 A M D 2

Description
D93 = Hockey puck
D96 = Compact
D99 = DIN rail

Output Voltage
1 = 2–60 Vdc
2 = 24–280 Vac ①
3 = 3–200 Vdc
4 = 48–480 Vac
6 = 48–600 Vac

Current
Output current in amps

Contact Configuration
A = SPST-NO
B = SPST-NC
C = DPST-NO
D = DPST-NC

Output Type
C = SCR
T = Triac
M = MOSFET

Turn On Type
Z = Zero cross
R = Random
D = DC switch

Input Voltage
1 = 90–280 Vac
2 = 3–32 Vdc
3 = 3.5–32 Vdc
4 = 4–15 Vdc
5 = 20–50 Vdc

Note
① For D96208ACZ3, output voltage is 3–150 Vdc.

D93 Series—Solid-State Relays

Contents

Description	*Page*
D93 Series	
Product Selection	**V7-T3-124**
Accessories	**V7-T3-124**
Technical Data and Specifications	**V7-T3-125**
Dimensions	**V7-T3-129**
D96 Series	**V7-T3-130**
D99 Series	**V7-T3-135**

D93 Series

Product Description

Eaton's D93 series of solid-state relays is a line of heavy-duty industrial relays in the common "hockey puck" package. The removable, finger-safe cover and optional accessories make the D93 safe and easy to install in a variety of applications.

Models are available in a variety of input voltages and switch types up to 75 A.

Application Description

A solid-state relay (SSR) can perform many applications that an electromechanical relay can perform. The SSR differs in that it has no moving mechanical parts within it and has some distinct advantages over an electromechanical relay.

When used correctly in the intended application, the SSR provides a high degree of reliability, a long service life, significantly reduced electromagnetic interference, fast response and high vibration resistance.

Applications for the SSR typically include equipment that requires high cycling rates, low acoustical or electrical noise, or high vibration resistance. Some examples are medical equipment, heating/cooling equipment, lighting control and pumps/compressors, among others.

Features and Benefits

- All solid-state circuitry with no moving parts to wear
- Compact, panel mounting for flexible installation
- Isolated input and output terminals to protect the system from electrical noise
- Internal snubber circuitry to protect the SSR from transients

Standards and Certifications

- UL/cUL recognized—UL 508
- CSA certified
- CE marked
- RoHS compliant

Product Selection

D93210ACZ1

D93 Series

Input Voltage	Output Voltage	Contact Configuration	Switching Type	Rated Current Load (Amps)	Catalog Number
90–280 Vac	24–280 Vac	SPST-NO	Zero cross	10	**D93210ACZ1**
3–32 Vdc	24–280 Vac	SPST-NO	Zero cross	10	**D93210ACZ2**
3–32 Vdc	24–280 Vac	SPST-NO	Triac	10	**D93210ATZ2**
90–280 Vac	24–280 Vac	SPST-NO	Zero cross	25	**D93225ACZ1**
3–32 Vdc	24–280 Vac	SPST-NO	Zero cross	25	**D93225ACZ2**
3–32 Vdc	24–280 Vac	SPST-NO	Triac	25	**D93225ATZ2**
90–280 Vac	24–280 Vac	SPST-NO	Zero cross	40	**D93240ACZ1**
3–32 Vdc	24–280 Vac	SPST-NO	Zero cross	40	**D93240ACZ2**
3–32 Vdc	24–280 Vac	SPST-NO	Triac	40	**D93240ATZ2**
90–280 Vac	24–280 Vac	SPST-NO	Zero cross	50	**D93250ACZ1**
3–32 Vdc	24–280 Vac	SPST-NO	Zero cross	50	**D93250ACZ2**
90–280 Vac	24–280 Vac	SPST-NO	Zero cross	75	**D93275ACZ1**
3–32 Vdc	24–280 Vac	SPST-NO	Zero cross	75	**D93275ACZ2**
3–32 Vdc	3–200 Vdc	SPST-NO	MOSFET	12	**D93312AMD2**
3–32 Vdc	3–200 Vdc	SPST-NO	MOSFET	25	**D93325AMD2**
3–32 Vdc	3–200 Vdc	SPST-NO	MOSFET	40	**D93340AMD2**

Accessories

D93HS1

D93 Series—Heat Sink

Eaton's D93HS1 heat sink is specifically designed to be used with D93 solid-state relays. It is pre-drilled and tapped, and matches the heat dissipation requirements for relays up to 50 A.

Heat Sink Accessory

Description	Catalog Number
Heat sink	**D93HS1**

Note: Always ensure that all details of the application are considered when determining heat dissipation requirements, including ambient temperature. The D93 relays must be firmly mounted to the heat sink using a suitable thermally conductive grease or thermal transfer pad.

D93TP1

D93 Series—Thermal Transfer Pad

The D93TP1 is a self-adhesive transfer pad designed for use with Eaton's D93 solid-state relays. When used properly, it will adequately conduct the heat to a heat sink without the use of grease.

Technical Data and Specifications

D93 Series

Description	Units	D93210ACZ1	D93210ACZ2	D93210ATZ2	D93225ACZ1	D93225ACZ2	D93225ATZ2
Output Characteristics							
Contact configuration		SPST-NO	SPST-NO	SPST-NO	SPST-NO	SPST-NO	SPST-NO
Switching device		SCR	SCR	Triac	SCR	SCR	Triac
Current rating	A	10	10	10	25	25	25
Switching type		Zero cross	Zero cross	Zero cross	Zero cross	Zero cross	Zero cross
Maximum rate of rise off state voltage (DV/DT)	V/us	200	250	700	500	500	250
Incandescent lamp ampere rating (rms)	A	8	16	16	16	16	16
Motor load rating (rms)	A	4.5	8	8	8	8	8
Min. load current to maintain on	mA	50	120	250	120	120	120
Non-repetitive surge current (1 cycle)	A	83	250	1000	250	250	250
Max. rms overload current (1 second)	A	24	80	50	40	40	80
Max. off state leakage current (rms)	mA	8	10	10	8	10	10
Peak blocking voltage	Vpk	600	300	—	600	600	—
Typical on state voltage drop (rms)	Vac	1.6	1.6	1.35	1.6	1.6	1.6
Max. on state voltage drop (rms)	Vac	1.6	1.6	1.6	1.6	1.6	1.6
Max. I^2t for fusing (A^2)		72	300	1700	312	250	300
Input Characteristics							
Must release voltage	V	10 AC	1 DC	10 AC	10 AC	1 DC	1 DC
Typical input impedance	ohms	13k	Current regulator	16–25k	13k	Current regulator	1.5k
Nominal input current at 5 Vdc or 240 Vac	mA	20	2	12	20	16	2
Reverse polarity protection		NA	Yes	NA	NA	Yes	Yes
Performance Characteristics							
Operating time (response time)							
ON	ms	8.3	8.3	8.3	8.3	8.3	8.3
OFF	ms	8.3	8.3	8.3	8.3	8.3	8.3
Rated insulation voltage—input to input	Vac	4000	4000	4000	4000	4000	4000
Dielectric strength—terminal to chassis	Vac	4000	4000	4000	4000	4000	4000
Environment							
Product certifications		UR, CSA, CE	UR, CSA, CE	UR, CSA, CE	UR, CSA, CE	UR, CSA, CE	UR, CSA, CE
Ambient air temperature							
Storage	°C	–40 to 100	–40 to 100	–40 to 100	–40 to 100	–40 to 100	–40 to 100
Operating	°C	–40 to 80	–40 to 80	–40 to 80	–40 to 80	–40 to 80	–40 to 80
Degree of protection		IP20	IP20	IP20	IP20	IP20	IP20
Miscellaneous Characteristics							
Thermal resistance (junction to case)	°C/W	3.5	3.5	1.45	1.02	1.02	1.45
Weight	g (oz)	100 (3.5)	100 (3.5)	100 (3.5)	100 (3.5)	100 (3.5)	100 (3.5)
LED—input		Green	Green	Green	Green	Green	Green
Input terminals		M3.5	M3.5	M3.5	M3.5	M3.5	M3.5
Output terminals		M4	M4	M4	M4	M4	M4
Terminal torque (max.)	Nm	1.0	1.0	1.0	1.0	1.0	1.0

D93 Series, continued

Description	Units	D93240ACZ1	D93240ACZ2	D93240ATZ2	D93250ACZ1	D93250ACZ2
Output Characteristics						
Contact configuration		SPST-NO	SPST-NO	SPST-NO	SPST-NO	SPST-NO
Switching device		SCR	SCR	Triac	SCR	SCR
Current rating	A	40	40	40	50	50
Switching type		Zero cross	Zero cross	Zero cross	Zero cross	Zero cross
Maximum rate of rise off state voltage (DV/DT)	V/us	500	500	250	500	500
Incandescent lamp ampere rating (rms)	A	30	30	20	39	39
Motor load rating (rms)	A	14	14	14	14	14
Min. load current to maintain on	mA	250	250	50	250	250
Non-repetitive surge current (1 cycle)	A	625	625	250	520	520
Max. rms overload current (1 second)	A	80	80	80	100	100
Max. off state leakage current (rms)	mA	10	10	10	10	8
Peak blocking voltage	Vpk	600	600	600	600	600
Typical on state voltage drop (rms)	Vac	1.6	1.6	1.6	1.1	1.8
Max. on state voltage drop (rms)	Vac	1.6	1.6	1.6	1.8	1.8
Max. I^2t for fusing (A^2)		1250	1250	438	1250	1250
Input Characteristics						
Must release voltage	V	10 AC	1 DC	1 DC	10 AC	1 DC
Typical input impedance	ohms	13k	ACL	1.5k	13k	Current regulator
Nominal input current at 5 Vdc or 240 Vac	mA	20	16	2	20	16
Reverse polarity protection		N/A	Yes	Yes	NA	Yes
Performance Characteristics						
Operating time (response time)						
ON	ms	8.3	8.3	8.3	8.3	8.3
OFF	ms	8.3	8.3	8.3	8.3	8.3
Rated insulation voltage—input to input	Vac	4000	4000	4000	4000	4000
Dielectric strength—terminal to chassis	Vac	4000	4000	4000	4000	4000
Environment						
Product certifications		UR, CSA, CE	UR, CSA, CE	UR, CSA, CE	UR, CSA, CE	UR, CSA, CE
Ambient air temperature						
Storage	°C	–40 to 100	–40 to 100	–40 to 100	–40 to 100	–40 to 100
Operating	°C	–40 to 80	–40 to 80	–40 to 80	–40 to 80	–40 to 80
Degree of protection		IP20	IP20	IP20	IP20	IP20
Miscellaneous Characteristics						
Thermal resistance (junction to case)	°C/W	0.9	0.9	0.95	0.63	0.63
Weight	g (oz)	100	100	100	135 (4.8)	135 (4.8)
LED—input		Green	Green	Green	Green	Green
Input terminals		M3.5	M3.5	M3.5	M3.5	M3.5
Output terminals		M6	M6	M6	M6	M6
Terminal torque (max.)	Nm	1.0	1.0	1.0	1.0	1.0

D93 Series, continued

Description	Units	D93275ACZ1	D93275ACZ2	D93312AMD2	D93325AMD2	D93340AMD2
Output Characteristics						
Contact configuration		SPST-NO	SPST-NO	SPST-NO	SPST-NO	SPST-NO
Switching device		SCR	SCR	MOSFET	MOSFET	MOSFET
Current rating	A	75	75	12	25	40
Switching type		Zero cross	Zero cross	DC switching	DC switching	DC switching
Maximum rate of rise off state voltage (DV/DT)	V/us	500	500	NA	NA	NA
Incandescent lamp ampere rating (rms)	A	39	39	NA	NA	NA
Motor load rating (rms)	A	25	25	NA	NA	NA
Min. load current to maintain on	mA	250	250	20	20	20
Non-repetitive surge current (1 cycle)	A	1150	1150	27	50	90
Max. rms overload current (1 second)	A	150	150	NA	NA	NA
Max. off state leakage current (rms)	mA	10	10	8	8	8
Peak blocking voltage	Vpk	600	600	—	—	—
Typical on state voltage drop (rms)	Vac	1.8	1.8	1.6	1.6	1.6
Max. on state voltage drop (rms)	Vac	1.8	1.8	2.83	2.83	2.83
Max. I^2t for fusing (A^2)		5000	5000	NA	NA	NA
Input Characteristics						
Must release voltage	V	10 AC	1 DC	1 DC	1 DC	1 DC
Typical input impedance	ohms	13k	Current regulator	1k	1k	1k
Nominal input current at 5 Vdc or 240 Vac	mA	20	16	10	10	10
Reverse polarity protection		NA	Yes	No	No	No
Performance Characteristics						
Operating time (response time)						
ON	ms	8.3	8.3	300 µs	600 µs	600 µs
OFF	ms	8.3	8.3	1	2.6	2.6
Rated insulation voltage—input to input	Vac	4000	4000	4000	4000	4000
Dielectric strength—terminal to chassis	Vac	4000	4000	2500	2500	2500
Environment						
Product certifications		UR, CSA, CE	UR, CSA, CE	UR, CSA, CE	UR, CSA, CE	UR, CSA, CE
Ambient air temperature						
Storage	°C	–40 to 100	–40 to 100	–40 to 100	–40 to 100	–40 to 100
Operating	°C	–40 to 80	–40 to 80	–40 to 80	–40 to 80	–40 to 80
Degree of protection		IP20	IP20	IP20	IP20	IP20
Miscellaneous Characteristics						
Thermal resistance (junction to case)	°C/W	0.6	0.63	1.06	1.06	0.63
Weight	g (oz)	200	135 (4.8)	110 (3.9)	110 (3.9)	135 (4.8)
LED—input		Green	Green	Green	Green	Green
Input terminals		M3.5	M3.5	M3.5	M3.5	M3.5
Output terminals		M6	M6	M4	M4	M6
Terminal torque (max.)	Nm	1.0	1.0	1.0	1.0	1.0

Temperature Derating Curves

10 Amp Styles

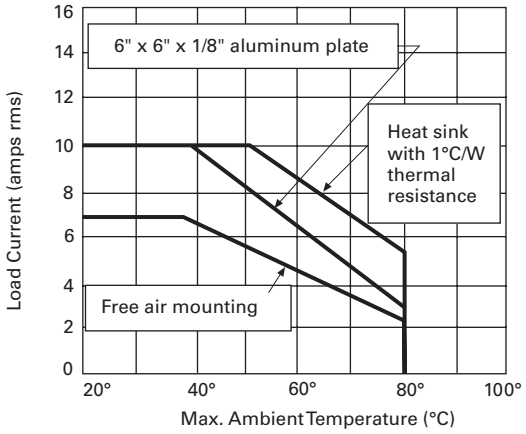

40 and 50 Amp Styles

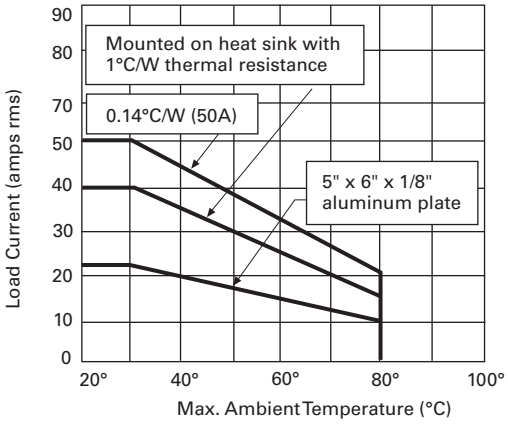

25 Amp Styles

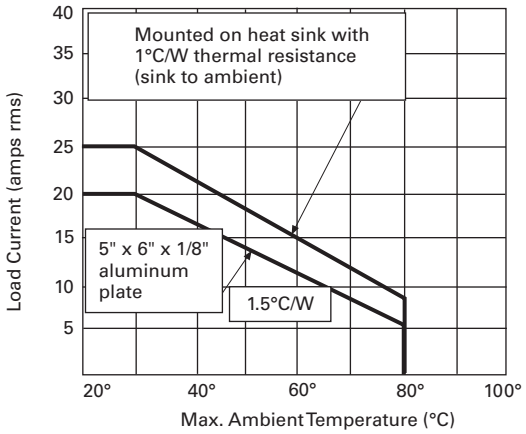

75 Amp Styles

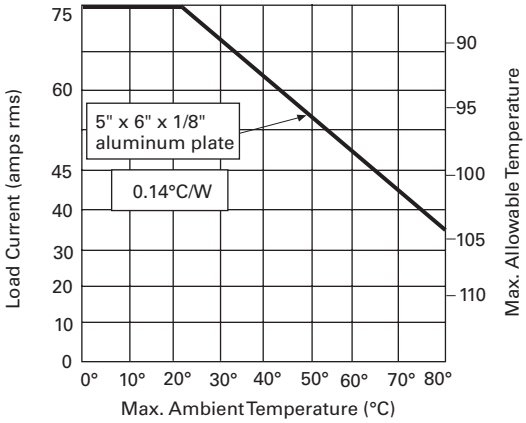

Dimensions

Approximate Dimensions in Inches (mm)

D93 Series

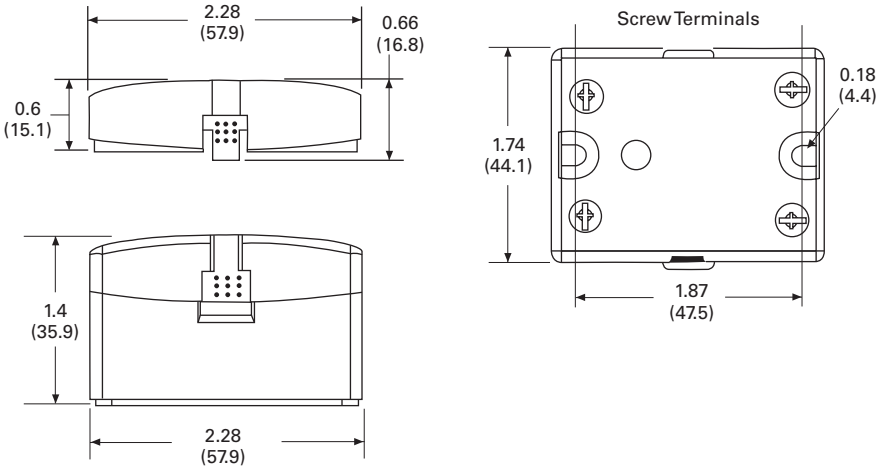

D96 Series—Solid-State Relays

Contents

Description	*Page*
D93 Series	**V7-T3-123**
D96 Series	
Product Selection	**V7-T3-131**
Technical Data and Specifications	**V7-T3-132**
Dimensions	**V7-T3-134**
D99 Series	**V7-T3-135**

D96 Series

Product Description

Eaton's D96 series of solid-state relays is a technologically advanced set of electronic relays for tough applications and harsh environments. The compact 17.5 mm wide package with an integrated heat sink provides easy mounting in tight spaces.

Application Description

A solid-state relay (SSR) can perform many applications that an electromechanical relay can perform. The SSR differs in that it has no moving mechanical parts within it and has some distinct advantages over an electromechanical relay.

When used correctly in the intended application, the SSR provides a high degree of reliability, a long service life, significantly reduced electromagnetic interference, fast response and high vibration resistance.

Applications for the SSR typically include equipment that requires high cycling rates, low acoustical or electrical noise, or high vibration resistance. Some examples are medical equipment, heating/cooling equipment, lighting control and pumps/compressors, among others.

Features and Benefits

- All solid-state circuitry has no moving parts to wear
- Integral heat sink eliminates the need for added accessories and installation
- Flexible mounting allows DIN rail or panel mounting without additional hardware or tools
- Isolated input and output terminals protect the system from electrical noise
- Internal snubber circuitry protects the SSR from transients

Standards and Certifications

- UL/cUL listed—UL 508
- CSA certified
- CE marked
- RoHS compliant

Product Selection

D96115ACZ3

D96 Series

Input Voltage	Output Voltage	Contact Configuration	Switching Type	Rated Current Load (Amps)	Catalog Number
3.5–32 Vdc	3–50 Vdc	SPST-NO	DC switch	15	**D96115ACZ3**
3.5–32 Vdc	3–150 Vdc	SPST-NO	DC switch	8	**D96208ACZ3**
90–280 Vac	24–280 Vac	SPST-NO	Random	10	**D96210ACR1**
3–32 Vdc	24–280 Vac	SPST-NO	Random	10	**D96210ACR2**
90–280 Vac	24–280 Vac	SPST-NO	Zero cross	10	**D96210ACZ1**
3–32 Vdc	24–280 Vac	SPST-NO	Zero cross	10	**D96210ACZ2**
3–32 Vdc	24–280 Vac	SPST-NC	Random	10	**D96210BCR2**
90–280 Vac	48–480 Vac	SPST-NO	Random	10	**D96410ACR1**
3–32 Vdc	48–480 Vac	SPST-NO	Random	10	**D96410ACR2**
90–280 Vac	48–480 Vac	SPST-NO	Zero cross	10	**D96410ACZ1**
3–32 Vdc	48–480 Vac	SPST-NO	Zero cross	10	**D96410ACZ2**
90–280 Vac	48–600 Vac	SPST-NO	Random	10	**D96610ACR1**
90–280 Vac	48–600 Vac	SPST-NO	Zero cross	10	**D96610ACZ1**
3–32 Vdc	48–600 Vac	SPST-NO	Zero cross	10	**D96610ACZ2**

Technical Data and Specifications

D96 Series

Description	Units	D96210ACZ1	D96210ACZ2	D96210ACR1	D96210ACR2	D96115ACZ3	D96208ACZ3	D96210BCR2
Output Characteristics								
Contact configuration		SPST-NO	SPST-NO	SPST-NO	SPST-NO	SPST-NO	SPST-NO	SPST-NC
Switching device		SCR	SCR	SCR	SCR	MOSFET	MOSFET	SCR
Current rating	A	10	10	10	10	15	8	10
Switching type		Zero cross	Zero cross	Random turn on	Random turn on	DC switching	DC switching	Random turn on
Maximum zero turn-on voltage (Vpk)	V	35	35	35	35	NA	NA	35
Maximum rate of rise off state voltage (DV/DT)	V/us	500	500	500	500	NA	NA	500
Incandescent lamp ampere rating (rms)	A	8	8	8	8	NA	NA	8
Motor load rating (rms)	A	4.5	4.5	4.5	4.5	NA	NA	4.5
Min. load current to maintain on	mA	50	50	50	50	20	20	50
Non-repetitive surge current (1 cycle)	A	500	500	500	500	50	35	500
Max. rms overload current (1 second)	A	24	24	24	24	24	17	24
Max. off state leakage current (rms)	mA	10	10	10	10	10	10	10
Typical on state voltage drop (rms)	V	1.25 AC	1.25 AC	1.25 AC	1.25 AC	1.25 DC	1.25 DC	1.25 AC
Max. on state voltage drop (rms)	V	1.6 AC	1.6 AC	1.6 AC	1.6 AC	1.6 DC	1.6 DC	1.6 AC
Max. I^2t for fusing (A^2)		1250	1250	1250	1250	NA	NA	1250
Input Characteristics								
Must release voltage	V	10 AC	1 DC	10 AC	1 DC	1 DC	1 DC	1 DC
Typical input impedance	ohms	16–25k	Current regulator	16–25k	ACL	Current regulator	Current regulator	ACL
Nominal input current at 5 Vdc or 240 Vac	mA	12	16	12	16	12	12	12
Reverse polarity protection		NA	Yes	NA	Yes	Yes	Yes	Yes
Performance Characteristics								
Operating time (response time)								
ON	ms	40	8.3	8.3	8.3	5	5	8.3
OFF	ms	80	8.3	8.3	8.3	5	5	8.3
Rated insulation voltage—input to input	Vac	2500	2500	4000	4000	2500	2500	4000
Dielectric strength—terminal to chassis	Vac	2500	2500	2500	2500	2500	2500	2500
Environment								
Product certifications		UL, CSA, CE	UL, CSA, CE	UL, CSA, CE	UL, CSA, CE	UL, CSA, CE	UL, CSA, CE	UL, CSA, CE
Ambient air temperature								
Storage	°C	–40 to 100	–40 to 100	–40 to 100	–40 to 100	–40 to 100	–40 to 100	–40 to 100
Operating	°C	–30 to 80	–30 to 80	–30 to 80	–30 to 80	–30 to 80	–30 to 80	–30 to 80
Degree of protection		IP20	IP20	IP20	IP20	IP20	IP20	IP20
Miscellaneous Characteristics								
Thermal resistance (junction to case)	°C/W	0.66	0.66	0.66	0.66	0.66	0.66	0.66
Integral heat sink	°C/W	4.0	4.0	4.0	4.0	4.0	4.0	4.0
Weight	g (oz)	127 (4.1)	127 (4.1)	127 (4.1)	127 (4.1)	127 (4.1)	127 (4.1)	127 (4.1)
LED—input		Green	Green	Green	Green	Green	Green	Green
Terminal wire capacity	AWG (mm^2)	14 (2.1)	14 (2.1)	14 (2.1)	14 (2.1)	14 (2.1)	14 (2.1)	14 (2.1)
Terminal torque (max.)	in-lb (Nm)	7.1 (0.8)	7.1 (0.8)	7.1 (0.8)	7.1 (0.8)	7.1 (0.8)	7.1 (0.8)	7.1 (0.8)

Temperature Derating Curves

8 Amp Style

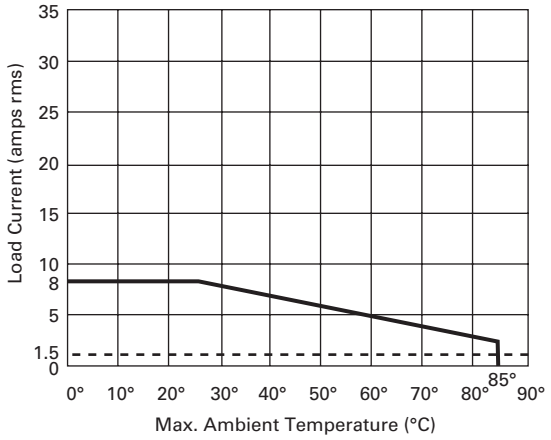

15 Amp Style

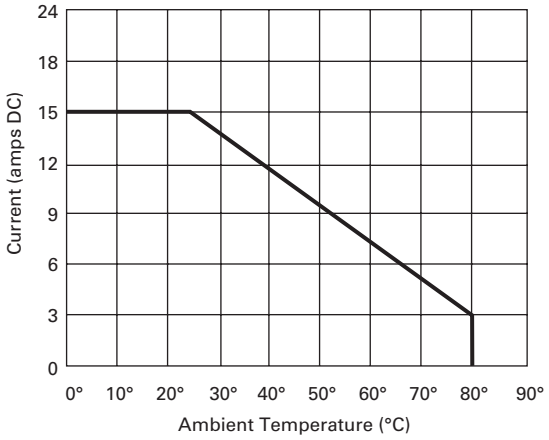

10 Amp Style

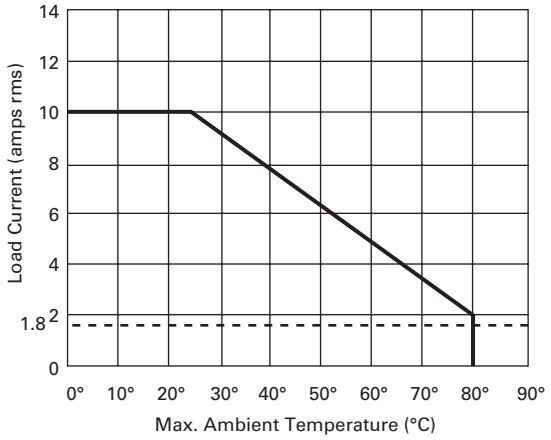

Dimensions

Approximate Dimensions in Inches (mm)

D96 Series

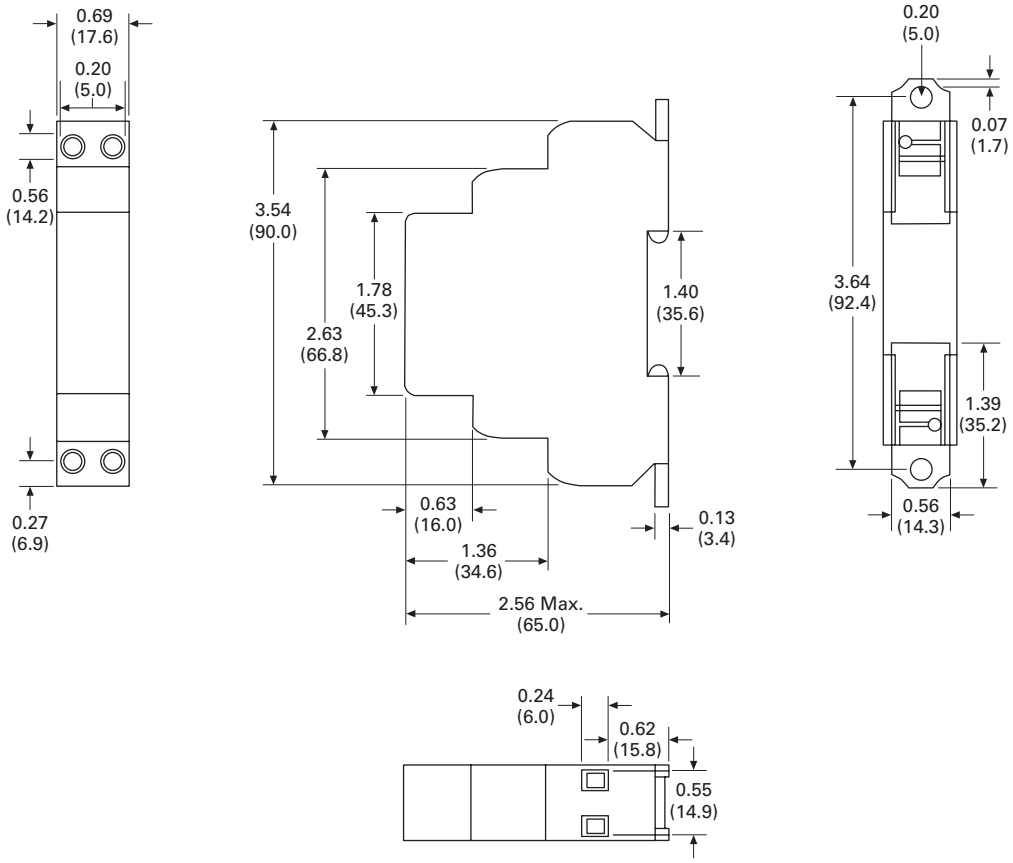

D99 Series—Solid-State Relays

Contents

Description	*Page*
D93 Series	**V7-T3-123**
D96 Series	**V7-T3-130**
D99 Series	
Product Selection	**V7-T3-136**
Technical Data and Specifications	**V7-T3-137**
Dimensions	**V7-T3-140**

D99 Series

Product Description

Eaton's D99 series of solid-state relays is a line of heavy-duty industrial relays with an integrated heat sink. The attached metal hardware can be used for DIN rail or panel mounting.

Models are available in a variety of input voltages in 10 A, 25 A and 40 A sizes.

Application Description

A solid-state relay (SSR) can perform many applications that an electromechanical relay can perform. The SSR differs in that it has no moving mechanical parts within it and has some distinct advantages over an electromechanical relay.

When used correctly in the intended application, the SSR provides a high degree of reliability, a long service life, significantly reduced electromagnetic interference, fast response and high vibration resistance.

Applications for the SSR typically include equipment that requires high cycling rates, low acoustical or electrical noise, or high vibration resistance. Some examples are medical equipment, heating/cooling equipment, lighting control and pumps/compressors, among others.

Features and Benefits

- All solid-state circuitry has no moving parts to wear
- Integral heat sink eliminates the need for added accessories and installation
- Flexible mounting allows DIN rail or panel mounting without additional hardware or tools
- Isolated input and output terminals protect the system from electrical noise
- Internal snubber circuitry protects the SSR from transients

Standards and Certifications

- UL/cUL listed—UL 508
- CSA certified
- CE marked
- RoHS compliant

c UL us Listed CE RoHS COMPLIANT

Product Selection

D99210ACZ1

D99 Series

Input Voltage	Output Voltage	Contact Configuration	Switching Type	Rated Current Load (Amps)	Catalog Number
90–280 Vac	24–280 Vac	SPST-NO	Zero cross	10	**D99210ACZ1**
3–32 Vdc	24–280 Vac	SPST-NO	Zero cross	10	**D99210ACZ2**
90–280 Vac	24–280 Vac	SPST-NO	Zero cross	25	**D99225ACZ1**
3–32 Vdc	24–280 Vac	SPST-NO	Zero cross	25	**D99225ACZ2**
90–280 Vac	24–280 Vac	SPST-NO	Zero cross	40	**D99240ACZ1**
3–32 Vdc	24–280 Vac	SPST-NO	Zero cross	40	**D99240ACZ2**
90–280 Vac	48–600 Vac	SPST-NO	Zero cross	10	**D99610ACZ1**
3–32 Vdc	48–600 Vac	SPST-NO	Zero cross	10	**D99610ACZ2**
90–280 Vac	48–600 Vac	SPST-NO	Zero cross	25	**D99625ACZ1**
3–32 Vdc	48–600 Vac	SPST-NO	Zero cross	25	**D99625ACZ2**
90–280 Vac	48–600 Vac	SPST-NO	Zero cross	40	**D99640ACZ1**
3–32 Vdc	48–600 Vac	SPST-NO	Zero cross	40	**D99640ACZ2**

Technical Data and Specifications

D99 Series

Description	Units	D99210ACZ1	D99210ACZ2	D99225ACZ1	D99225ACZ2	D99240ACZ1	D99240ACZ2
Output Characteristics							
Contact configuration		SPST-NO	SPST-NO	SPST-NO	SPST-NO	SPST-NO	SPST-NO
Switching device		SCR	SCR	SCR	SCR	SCR	SCR
Current rating	A	10	10	25	25	40	40
Switching type		Zero cross	Zero cross	Zero cross	Zero cross	Zero cross	Zero cross
Maximum zero turn-on voltage (Vpk)	V	35	35	35	35	35	35
Maximum rate of rise off state voltage (DV/DT)	V/us	500	200	500	500	500	500
Incandescent lamp ampere rating (rms)	A	8	8	16	16	20	20
Motor load rating (rms)	A	4.5	4.5	8	8	14	14
Min. load current to maintain on	mA	50	50	120	120	250	250
Non-repetitive surge current (1 cycle)	A	83	83	800	800	800	800
Max. rms overload current (1 second)	A	24	24	40	40	100	100
Max. off state leakage current (rms)	mA	10	10	10	10	10	10
Typical on state voltage drop (rms)	Vac	1.25	1.25	1.35	1.35	1.6	1.6
Max. on state voltage drop (rms)	Vac	1.6	1.6	1.8	1.8	1.6	1.6
Max. I^2t for fusing (A^2)		83	83	3700	3700	3700	83
Input Characteristics							
Must release voltage	V	10 AC	1 DC	10 AC	1 DC	10 AC	1 DC
Typical input impedance	ohms	16–25k	Current regulator	16–25k	Current regulator	13k	Current regulator
Nominal input current at 5 Vdc or 240 Vac	mA	12	12	12	12	16	16
Reverse polarity protection		NA	Yes	NA	Yes	NA	Yes
Performance Characteristics							
Operating time (response time)							
ON	ms	8.3	8.3	8.3	8.3	8.3	10
OFF	ms	8.3	8.3	8.3	8.3	8.3	10
Rated insulation voltage—input to input	Vac	4000	4000	4000	4000	4000	4000
Dielectric strength—terminal to chassis	Vac	4000	4000	4000	4000	4000	4000
Environment							
Product certifications		UL, CSA, CE	UL, CSA, CE	UL, CSA, CE	UL, CSA, CE	UL, CSA, CE	UL, CSA, CE
Ambient air temperature							
Storage	°C	–40 to 100	–40 to 100	–40 to 100	–40 to 100	–40 to 100	–40 to 100
Operating	°C	–30 to 80	–30 to 80	–30 to 80	–30 to 80	–30 to 80	–30 to 80
Degree of protection		IP20	IP20	IP20	IP20	IP20	IP20
Miscellaneous Characteristics							
Thermal resistance (junction to case)	°C/W	1.5	1.5	1.5	0.43	1.5	0.43
Integral heat sink	°C/W	2.2	2.2	2.2	2.2	2.2	2.2
Weight	g (oz)	320 (11.3)	320 (11.3)	320 (11.3)	326 (11.5)	320 (11.3)	332 (11.7)
LED—input		Green	Green	Green	Green	Green	Green
Terminal wire capacity	AWG (mm^2)	8 (10)	8 (10)	8 (10)	8 (10)	8 (10)	8 (10)
Terminal torque (max.)	in-lb (Nm)	12.5 (1.4)	12.5 (1.4)	12.5 (1.4)	12.5 (1.4)	12.5 (1.4)	12.5 (1.4)

D99 Series, continued

Description	Units	D99610ACZ1	D99610ACZ2	D99625ACZ1	D99625ACZ2	D99640ACZ1	D99640ACZ2
Output Characteristics							
Contact configuration		SPST-NO	SPST-NO	SPST-NO	SPST-NO	SPST-NO	SPST-NO
Switching device		SCR	SCR	SCR	SCR	SCR	SCR
Current rating	A	10	10	25	10	40	40
Switching type		Zero cross	Zero cross	Zero cross	Zero cross	Zero cross	Zero cross
Maximum zero turn-on voltage (Vpk)	V	35	35	35	35	35	35
Maximum rate of rise off state voltage (DV/DT)	V/us	200	200	700	700	500	500
Incandescent lamp ampere rating (rms)	A	8	8	16	16	20	20
Motor load rating (rms)	A	4.5	4.5	8	8	14	14
Min. load current to maintain on	mA	80	80	250	250	250	250
Non-repetitive surge current (1 cycle)	A	83	83	1000	1000	800	800
Max. rms overload current (1 second)	A	24	24	50	50	100	100
Max. off state leakage current (rms)	mA	10	10	10	10	10	10
Typical on state voltage drop (rms)	Vac	1.25	1.25	1.35	1.35	1.6	1.6
Max. on state voltage drop (rms)	Vac	1.6	1.6	1.6	1.6	1.6	1.6
Max. I^2t for fusing (A^2)		83	83	1700	1700	3700	3700
Input Characteristics							
Must release voltage	V	10 AC	1 DC	10 AC	1 DC	10 AC	1 DC
Typical input impedance	ohms	16–25k	Current regulator	16–25k	Current regulator	13k	Current regulator
Nominal input current at 5 Vdc or 240 Vac	mA	12	16	12	16	16	16
Reverse polarity protection		NA	Yes	NA	Yes	NA	Yes
Performance Characteristics							
Operating time (response time)							
ON	ms	8.33	8.3	8.33	8.3	10	10
OFF	ms	8.33	8.3	8.33	8.3	10	10
Rated insulation voltage—input to input	Vac	4000	4000	4000	4000	4000	4000
Dielectric strength—terminal to chassis	Vac	4000	4000	4000	4000	4000	4000
Environment							
Product certifications		UL, CSA, CE	UL, CSA, CE	UL, CSA, CE	UL, CSA, CE	UL, CSA, CE	UL, CSA, CE
Ambient air temperature							
Storage	°C	–40 to 100	–40 to 100	–40 to 100	–40 to 100	–40 to 100	–40 to 100
Operating	°C	–30 to 80	–30 to 80	–30 to 80	–30 to 80	–30 to 80	–30 to 80
Degree of protection		IP20	IP20	IP20	IP20	IP20	IP20
Miscellaneous Characteristics							
Thermal resistance (junction to case)	°C/W	1.8	1.8	0.43	0.43	0.43	0.43
Integral heat sink	°C/W	2.2	2.2	2.2	2.2	2.2	2.2
Weight	g (oz)	320 (11.3)	321 (11.3)	326 (11.5)	326 (11.5)	332 (11.7)	332 (11.7)
LED—input		Green	Green	Green	Green	Green	Green
Terminal wire capacity	AWG (mm^2)	8 (10)	9 (10)	8 (10)	8 (10)	8 (10)	8 (10)
Terminal torque (max.)	in-lb (Nm)	12.5 (1.4)	12.5 (1.4)	12.5 (1.4)	12.5 (1.4)	12.5 (1.4)	12.5 (1.4)

Temperature Derating Curves

10 Amp Styles

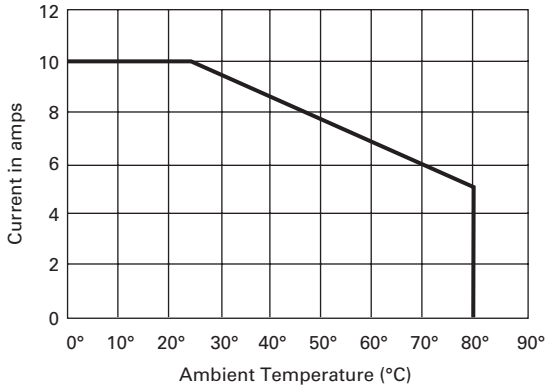

40 Amp Styles

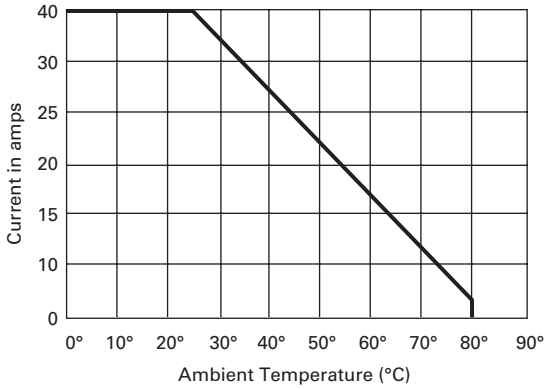

25 Amp Styles

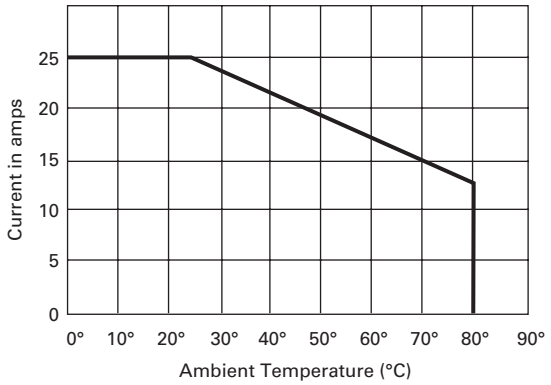

Dimensions

Approximate Dimensions in Inches (mm)

D99 Series

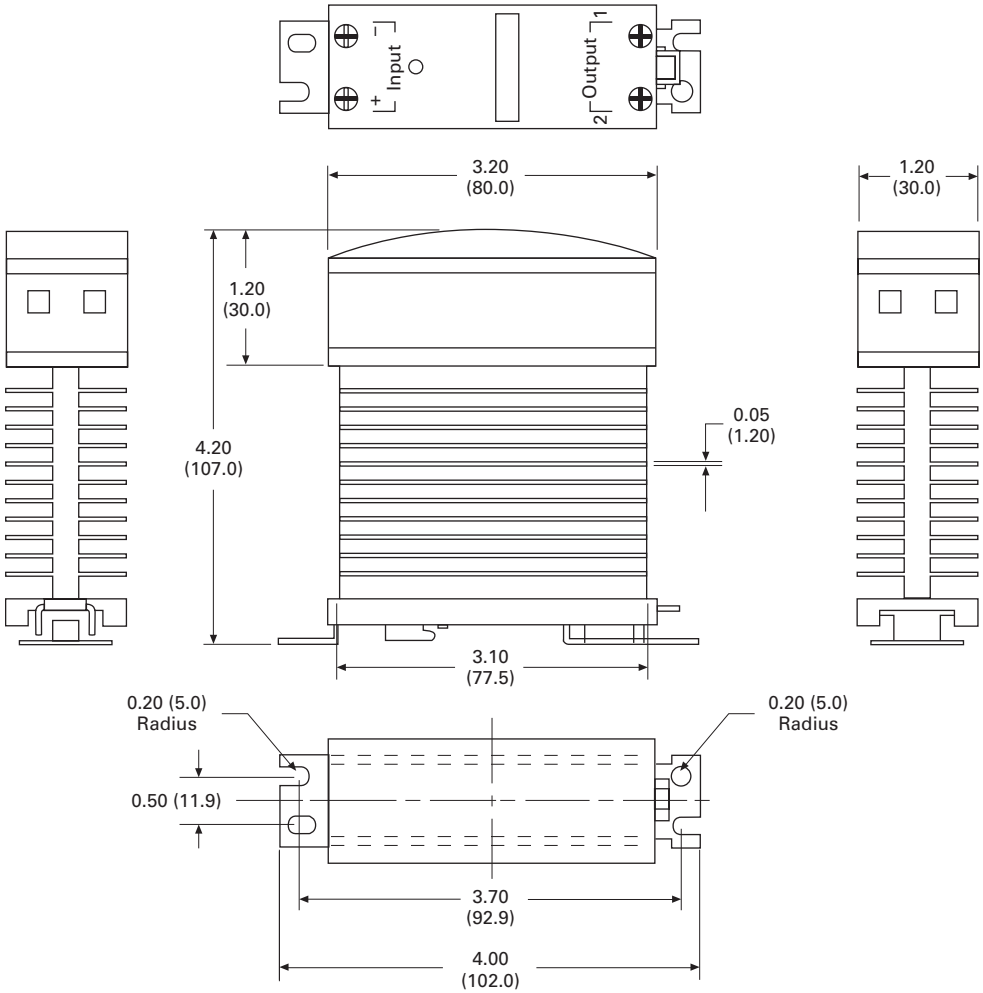

Machine Tool Relays

Contents

Description	*Page*
Machine Tool Relays	
D15 Series—Freedom 600 V Multipole	**V7-T3-142**
BF/BFD Series—Fixed Contact Industrial Control	**V7-T3-147**
AR/ARD Series—Convertible Contact Industrial Control	**V7-T3-153**
D26 Series—Type M, 600 Vac Multipole with Convertible Contacts	**V7-T3-158**
D26 Series—Type M, DC Multipole with Convertible Contacts	**V7-T3-163**

Product Overview

Eaton's machine tool relay offering includes a variety of NEMA type relays. Included in this are open style relays and relays with convertible or side-mount contacts. Also included in this family are a variety of accessories to match the application, including suppressors, timing contacts and enclosures. The relay coils are available in a variety of line and control level voltages.

D15 Series—Freedom 600 V Multipole

Contents

Description	*Page*
D15 Series—Freedom 600 V Multipole	
Product Selection	**V7-T3-143**
Accessories	**V7-T3-144**
Technical Data and Specifications	**V7-T3-145**
Dimensions	**V7-T3-146**
BF/BFD Series—Fixed Contact Industrial Control	**V7-T3-147**
AR/ARD Series—Convertible Contact Industrial Control	**V7-T3-153**
D26 Series—Type M, 600 Vac Multipole with Convertible Contacts	**V7-T3-158**
D26 Series—Type M, DC Multipole with Convertible Contacts	**V7-T3-163**

D15 Series—Freedom 600 V Multipole

Product Description

Contact poles on the D15 relay are of the fixed design and are not convertible. The basic four-pole relay will accept a front-mounted contact pole deck and/or side-mounted contact blocks (one per side). In addition, a side-mounted solid-state timer or a front-mounted pneumatic timer can be added to the relay. Only one front-mounted attachment can be added to the basic relay.

Application Description

Side-mounted contact blocks can be used to provide additional poles in applications where a pneumatic timer is installed on the front of the relay. They can also be used where panel depth is restricted.

The maximum number of contacts recommended per relay is eight, six of which can be NC. When a pneumatic timer is used, the maximum recommended number of NC contacts is three.

Relays with DC coils are supplied with a coil clearing NC contact mounted on the side of the relay.

Features and Benefits

- 600 V, 10 A continuous thermal current
- State indicator visually shows relay ON or OFF status
- Relay base has mounting holes on 35 x 60 mm centers, permitting direct replacement of competitive relays
- Relay also mounts on 35 mm DIN rail as standard
- Magnet coil has three terminals, permitting either top or diagonal wiring—easy to replace European or U.S. relays without changing wiring layout

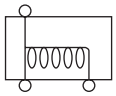

- Contact pole terminals have captive, backed-out, self-lifting pressure plates with ± screws—reduced wiring time
- All terminals are shrouded or "finger-proofed" to reduce possibility of electrical shock

Standards and Certifications

- UL
- CSA certified

Product Selection

When Ordering, Specify

Catalog number and magnet coil code letter. Example: For a four-pole relay having 4NO contacts with a 120 V 60 Hz coil, order Catalog Number D15CR40**A**B.

Factory-Assembled Multipole Relays

	Number of Poles	Type of Contacts NO	NC	Open Type Catalog Number ①
D15CR40_B	4	4	0	**D15CR40_B**
		3	1	**D15CR31_B**
		2	2	**D15CR22_B**
		1	3	**D15CR13_B**
		0	4	**D15CR04_B**
D15CR60_B	6 (four-pole relay with two-pole front-mounted deck)	6	0	**D15CR60_B**
		5	1	**D15CR51_B**
		4	2	**D15CR42_B**
		3	3	**D15CR33_B**
		2	4	**D15CR24_B**
		1	5	**D15CR15_B** ②
		0	6	**D15CR06_B** ②
D15CR80_B	8 (four-pole relay with four-pole front-mounted deck)	8	0	**D15CR80_B**
		7	1	**D15CR71_B**
		6	2	**D15CR62_B**
		5	3	**D15CR53_B**
		4	4	**D15CR44_B**
		3	5	**D15CR35_B** ②
		2	6	**D15CR26_B** ②

Additional Contact Poles

Description	Catalog Number
Front Contact Pole Deck	
1NO-1NC	**C320KGT3**
2NO	**C320KGT4**
2NC	**C320KGT5**
1NO (early closing)–1NC (late opening)	**C320KGT7**
4NO	**C320KGT13**
3NO-1NC	**C320KGT14**
2NO-2NC	**C320KGT15**
1NO-3NC	**C320KGT16**
4NC	**C320KGT17**
Side-Mounted Contact Blocks	
1NO-1NC	**C320KGS3**
2NO	**C320KGS4**
2NC	**C320KGS5**
1NO (early closing)–1NC (late opening)	**C320KGS7**

Magnet Coil Selection

AC Coils Volts and Hertz	Code Suffix
120/60 or 110/50	**A**
240/60 or 220/50	**B**
480/60 or 440/50	**C**
600/60 or 550/50	**D**
208/60	**E**
277/60	**H**
208–240/60	**J**
24/60	**T**

DC Coils Volts	Code Suffix
12	**R1**
24	**T1**
48	**W1**
120	**A1**

Notes

① Underscore indicates missing code suffix for magnet coil—see Magnet Coil Selection table above.
② Not all suffix codes available: consult Customer Support Center.

Accessories

C320 Pneumatic Timer Attachment

Pneumatic Timer Attachment

Timing Range	Catalog Number
0.1 to 30 seconds	**C320TP1**
10 to 180 seconds	**C320TP2**

Maximum Ampere Ratings

Description	Volts AC 120	240	480	600
Make	30	15	7.5	6
Break	3	1.5	0.75	0.6

Attachment mounts on top of any Freedom Series relay (top-mounted auxiliary contacts can not be installed on device when timer is used). Timer unit has DPST timed contacts—circuits in each pole must be the same polarity. Units are convertible from OFF to ON delay or vice-versa.

Finger Protection Shields

Application	Catalog Number
D15	**C320LS1**

Snap-on shields for both contactors and starters provide IEC Type IP20 Finger Protection. Prevents accidental contact with line/load terminals.

Adhesive Dust Cover

Description	Catalog Number
25 to a package	**C320DSTCVR**

These adhesive stickers come 25 to a package and provide extra protection from contaminants when applied to the sides of Freedom D15. Adhesive covers are easily applied to side opening where auxiliaries are not installed and provide extra protection from metal filings and other debris.

Solid-State Timer

Solid-State ON DELAY Timer ①

Timing Range	Catalog Number ②③④
0.1 to 1.0 seconds	**C320TDN1_**
1 to 30 seconds	**C320TDN30_**
30 to 300 seconds	**C320TDN300_**
5 to 30 minutes	**C320TDN3000_**

This timer is designed to be **wired in series with the load** (typically a coil). When the START button is pushed (power applied to timer), the ON delay timing function starts. At the completion of the set timing period, timer and series wired load will both be energized.

C32MP1

Metal Mounting Plate

Description	Catalog Number
Metal mounting plate	**C321MP1**

Fits all D15 multipole relays.

DIN Rail

Mounting Channel (DIN Rail)

Description	Catalog Number
1 meter length	**XBANS3575P**

Designed for DIN rail mounting of Freedom Series relays.

C320TS2

Transient Suppressor Kits

Description	Coil Voltage 50/60 Hz ⑤	Catalog Number
Transient	24/120 V	**C320TS1**
Suppressor	208/240 V	**C320TS2**
	277/480 V	**C320TS3**

These kits limit high voltage transients produced in the control circuit when power is removed from the contactor or starter coil. There are three separate suppressors for use on 24–120 V, 208–240 V or 27–480 V coils respectively.

These devices mount directly to the coil terminals.

Notes

① Side mounted on Freedom Series NEMA 00–2, D15, IECA-K and C25D, C25E and C25F frame.
② Add operating voltage suffix to catalog number; **A** = 120 V, **B** = 240 V, **E** = 208 V.
③ Rated 0.5 ampere pilot duty—not to be used on larger contactors.
④ Terminal connections are quick connects only. Two per side.
⑤ Suppressor is compatible with coil voltages/ranges as shown, both 50 and 60 Hz.

C320DC

AC/DC Interface Module—Controller Coil Voltage Ranges

Controller Catalog Number Prefix	Controller Size or Rating	Coil Range Volts AC
AE16, AE17, AE56, AE57, CE15, CE55	A–F	24–240
	G–K	48–240
	L–N	110–240
AN16, AN56, CN15, CN55	00–0	24–240
	1–2	48–240
	3	110–240
CN35	10–30 A	24–240
	60 A	48–240
	100 A	110–240

The Catalog Number C320DC Interface Module is an optically isolated solid-state switch that provides a means of operating AC coils with a 24 Vdc control signal. It acts as a space-saving interposing relay that can switch a specified 50/60 Hz AC source to the contactor or starter coil.

The module may be directly attached to the coil terminals of any Freedom Series contactor or starter—NEMA Sizes 00–3, D15, IEC Sizes A–N and lighting contactors 10–100 A. It also has provisions for DIN rail mounting.

The module will operate coils within the voltage ranges shown in the table to the left.

Design Characteristics

- DC input: 24 V ±10% at mA nominal
- AC operating voltage: 24–240 Vac ±10% 50/60 Hz
- AC current rating: 10 A make (inrush), 1 A break (sealed)

Typical Application—Solid-State Switch

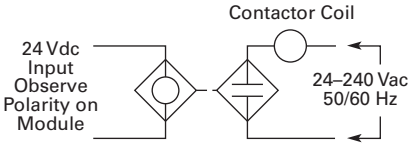

Technical Data and Specifications

Contact Ratings—NEMA A600

Continuous Thermal Rating: 10 A

AC Volts	Make	Break
120	60	6.0
240	30	3.0
480	15	1.5
600	12	1.2

Contact Ratings—NEMA P300

Continuous Thermal Rating: 5 A

DC Volts	Make/Break Amperes
125	1.1
250	0.55

Magnet Coil Data

AC Voltage	Pickup VA	Pickup Watts	Sealed VA	Sealed Watts
12–600 V	80	49	7.5	2.4

DC Voltage	Pickup Amps	Pickup Watts	Sealed VA	Sealed Watts
12	6.4	76.8	0.28	3.36
24	3.2	76.8	0.14	3.36
48	1.6	76.8	0.07	3.36
120	0.64	76.8	0.028	3.36

Example of Terminal Marking with 2NO and 2NC Contacts

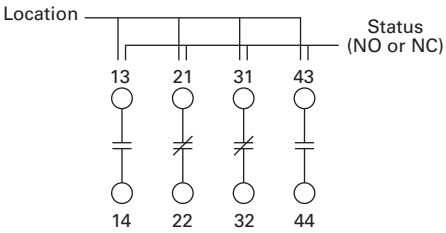

Relay terminals are identified by a two-digit number in accordance with International Standards approved by CENELEC (European Committee for Electro-technical Standardization). The number is marked on the relay and is used to identify location and status of the contacts.

The first digit indicates the location of the contact on the relay. The numbering begins with 1 and continues without a break from left to right.

The second digit indicates the status of the contacts (NO or NC). Terminal marking 1 and 2 mean NC and 3 and 4 mean NO.

Dimensions

Approximate Dimensions in Inches (mm)

D15 Four-Pole Relay

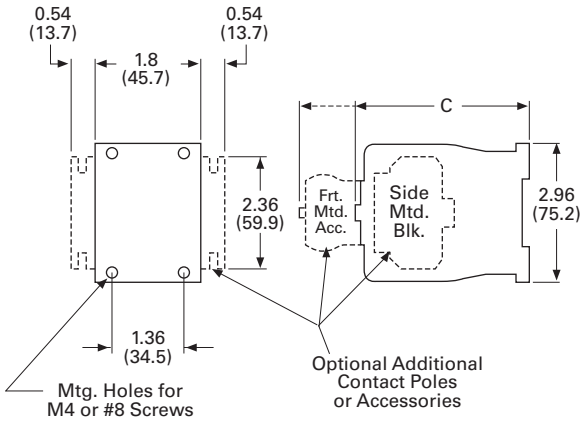

D15 Six- and Eight-Pole Relays

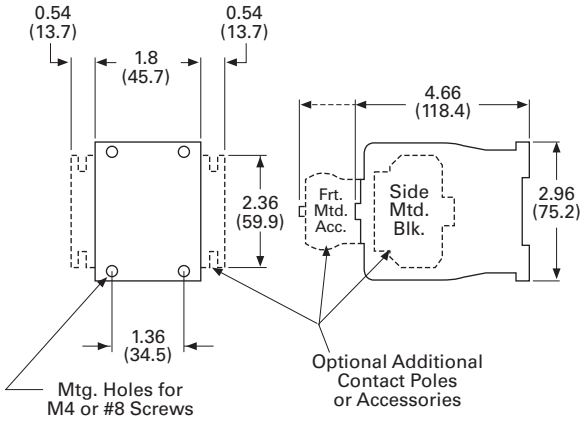

Dimensions and Shipping Weights

Description	Dimension C	Shipping Weights Lbs (kg)
Relay only	3.30 (83.8)	1.3 (0.6)
Relay with timer attachment	5.55 (141.0)	1.5 (0.7)
Relay with front contact pole deck	4.66 (118.4)	1.7 (0.8)

BF/BFD Series—Fixed Contact Industrial Control

Contents

Description	*Page*
D15 Series—Freedom 600 V Multipole	**V7-T3-142**
BF/BFD Series—Fixed Contact Industrial Control	
Product Selection	**V7-T3-148**
Options	**V7-T3-150**
Technical Data and Specifications	**V7-T3-151**
Dimensions	**V7-T3-152**
AR/ARD Series—Convertible Contact Industrial Control	**V7-T3-153**
D26 Series—Type M, 600 Vac Multipole with Convertible Contacts	**V7-T3-158**
D26 Series—Type M, DC Multipole with Convertible Contacts	**V7-T3-163**

BF/BFD Series—Fixed Contact Industrial Control

Product Description

Type BF is AC operated, 300 V maximum, and the BFD is DC operated, 250 V. Fixed contact relays are available in any combination of NO and NC from two to 12 poles. BF and BFD relays have captive clamp terminals fully accessible from the front, a molded coil with low operating temperature and silver alloy contacts suitable for low voltage circuits.

Features and Benefits

Wiring to Relay

- In parallel with coil—one timed and up to 12 instantaneous contacts, or
- In series with coil—up to 12 timed contacts in one relay

Permanent Magnet Latch

- Field mountable on Catalog Number BF; factory installed on BFD
- Latch coil continuously rated
- Latch plunger adjustable for optimum performance

Standards and Certifications

- UL recognized, UL File No. E19223 (AC relays only)
- CSA certified, File No. LR39402-6, LR28548-10, 11 (AC and DC relays)

Product Selection

When Ordering, Specify

- Catalog number of basic relay
- If a coil voltage other than listed is required, select the suffix code from the Coil Voltage table and substitute it for the last letter in the catalog number. Example: BF80**V** for a 110/60 AC coil

Type BF

Type BFD

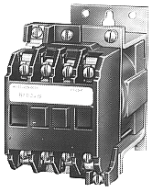

Complete Relay—Type BF and BFD, Two-, Three-, Four- and Six-Pole ①

Number of Poles	Type of Contact NO (Form A)	NC (Form B)	BF 300 Vac Basic Relays 120/60, 110/50 AC Coil Catalog Number	BFD 250 Vdc Basic Relays 120 DC Coil Catalog Number
2	2	0	**BF20F**	**BFD20S**
	1	1	**BF11F**	**BFD11S**
	0	2	**BF02F**	**BFD02S**
3	3	0	**BF30F**	**BFD30S**
	2	1	**BF21F**	**BFD21S** ②
	1	2	**BF12F**	**BFD12S**
	0	3	**BF03F**	**BFD03S**
4	4	0	**BF40F**	**BFD40S**
	3	1	**BF31F**	**BFD31S**
	2	2	**BF22F**	**BFD22S**
	1	3	**BF13F**	**BFD13S**
	0	4	**BF04F**	**BFD04S**
6	6	0	**BF60F**	**BFD60S**
	5	1	**BF51F**	**BFD51S**
	4	2	**BF42F**	**BFD42S**
	3	3	**BF33F**	**BFD33S**
	2	4	**BF24F**	**BFD24S**
	0	6	**BF06F**	**BFD06S**

Coil Voltage

BF Coils

Volts AC	Hz	Suffix Code
12	60	**H**
24	60	**I**
48	60	**J**
110	60	**V**
110/120	50/60	**F**
208	60	**K**
220/240	50/60	**G**
440	60	**C**

BFD Coils

Volts DC	Suffix Code
6	**C**
12	**D**
24	**L**
38	**N**
48	**M**
72	**E**
95	**B**
120	**S**
130	**U**
240	**T**

Notes

① Relays listed above with equal number of NO and NC contact poles are specially priced—1NO and 1NC pole are supplied at no additional charge.

② Consult Customer Support Center for availability.

When Ordering, Specify

- Catalog number of basic relay
- If a coil voltage other than listed is required, select the suffix code from the Coil Voltage table and substitute it for the last letter in the catalog number. Example: BF80**V** for a 110/60 AC coil

Type BF

Type BFD

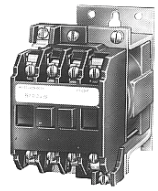

Complete Relay—Type BF and BFD, Eight-, 10- and 12-Pole ①

Number of Poles	Type of Contact NO (Form A)	Type of Contact NC (Form B)	BF 300 Vac Basic Relays 120/60, 110/50 AC Coil Catalog Number	BFD 250 Vdc Basic Relays 120 DC Coil Catalog Number
8	8	0	**BF80F**	**BFD80S**
	7	1	**BF71F**	**BFD71S**
	6	2	**BF62F**	**BFD62S**
	5	3	**BF53F**	**BFD53S**
	4	4	**BF44F**	**BFD44S**
	0	8	**BF08F**	**BFD08S**
10	10	0	**BF100F**	**BFD100S**
	8	2	**BF82F**	**BFD82S** ②
	7	3	**BF73F** ②	**BFD73S**
	6	4	**BF64F**	**BFD64S**
	5	5	**BF55F**	**BFD55S** ②
	4	6	**BF46F**	**BFD46S**
	2	8	**BF28F**	**BFD28S**
12	12	0	**BF120F**	**BFD120S**
	8	4	**BF84F**	**BFD84S**
	7	5	**BF75F**	**BFD75S**
	6	6	**BF66F**	**BFD66S**
	5	7	**BF57F**	**BFD57S**
	4	8	**BF48F**	**BFD48S**

Coil Voltage

BF Coils

Volts AC	Hz	Suffix Code
12	60	**H**
24	60	**I**
48	60	**J**
110	60	**V**
110/120	50/60	**F**
208	60	**K**
220/240	50/60	**G**
440	60	**C**

BFD Coils

Volts DC	Suffix Code
6	**C**
12	**D**
24	**L**
38	**N**
48	**M**
72	**E**
95	**B**
120	**S**
130	**U**
240	**T**

Notes

① Relays listed above with equal number of NO and NC contact poles are specially priced—1NO and 1NC pole are supplied at no additional charge.

② Consult Customer Support Center for availability.

Permanent Magnet Latch, Relay Mounted

Permanent Magnet Latch

Coil Volts	Coil Hz	Catalog Number
AC Relays		
24	60	**BFMLI** ②
48	60	**BFMLJ** ②
110/120	50/60	**BFMLF**
220/240	50/60	**BFMLG**
DC Relays		
24	—	**BFMLL**
48	—	**BFMLM**
120	—	**BFMLS**
240	—	**BFMLT**

Options

FASTON Push-On Terminals

Description	Code Letter	Catalog Number
Insert letter **F** after relay type designation in listed catalog number. Example: BF**F**20F or BFD**F**20S	**F**	—

Overlapping Contacts

Description	Code Letter	Catalog Number
NO contact closes before corresponding NC contact opens—supplied as NO/NC set(s). Insert letter **A** after relay type designation in listed catalog number. Example: BF**A**22F or BFD**A**F22S	**A**	—

NEMA 1 Enclosure for Relay Types

Description	Code Letter	Catalog Number
BF, AR—all poles	—	**4977D40G04**
BFD—4–8 poles	—	**4977D40G04**
ARD—4–8 poles	—	**4977D40G04**

Notes

① For panel mount, add Suffix **F**.

② Consult Customer Support Center for availability.

Technical Data and Specifications

General Specifications

BF Relay Electrical Ratings—NEMA A300

	Maximum Current			Maximum VA	
Volts	**Cont.**	**Make**	**Break**	**Make**	**Break**
120	10	60	6	7200	720
240	10	30	3	7200	720

Horsepower Ratings (UL Recognized)

	AC Volts	
Phase	**115**	**230**
1	1/6	1/2
3	—	1

DC Rating—NEMA P300

	Maximum Current			
Volts	**Cont.**	**Make**	**Break**	**Max. Make or Break (VA)**
125	5.0	1.1	1.1	138
250	5.0	0.55	0.55	138

Resistive Rating

125 Vdc	3 A
250 Vdc	1.5 A

Coil Power Requirements

AC	72 VA open, 22 VA closed
DC	12 watts (nominal), 250 V max.

Permanent Magnet Latch Specifications

Item	Specification
Unlatching power requirements	Open gap: 24 VA AC Closed gap: 7 VA Burden: 4 watts (AC)

Contact Arrangements—BF and BFD Relays

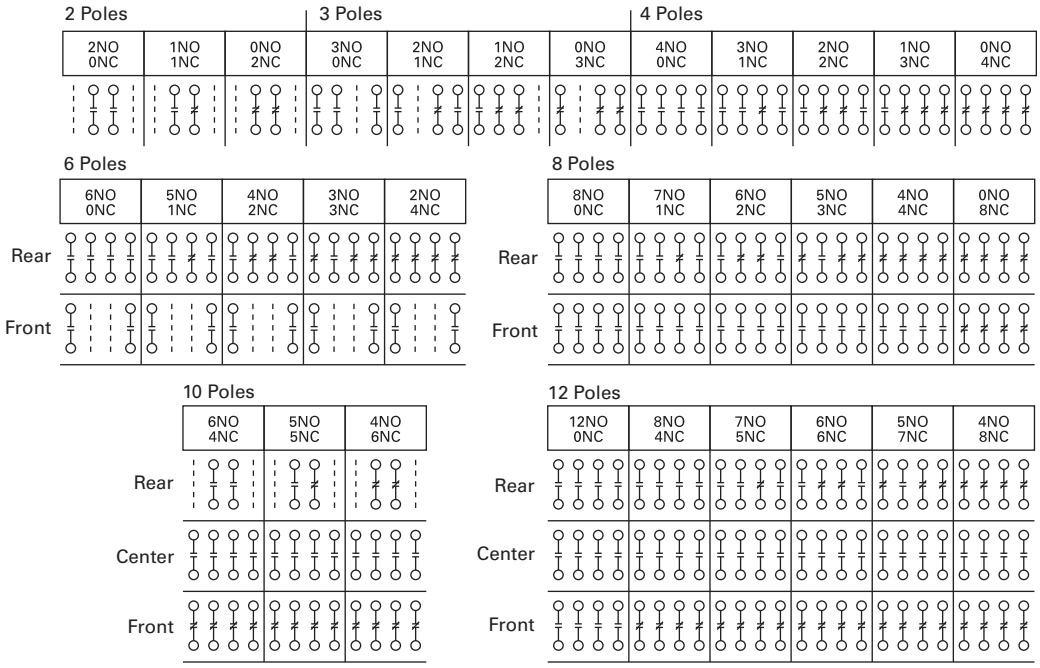

Note: NO = Normally Open NC = Normally Closed

Dimensions

Approximate Dimensions in Inches (mm)

BF Relay with Permanent Magnet Latch and Solid-State Timer

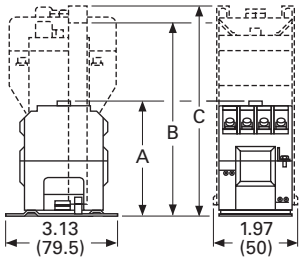

BFD Relay with Solid-State Timer

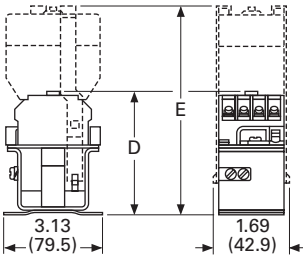

Enclosures—NEMA 1 for BF, BFD, AR and ARD

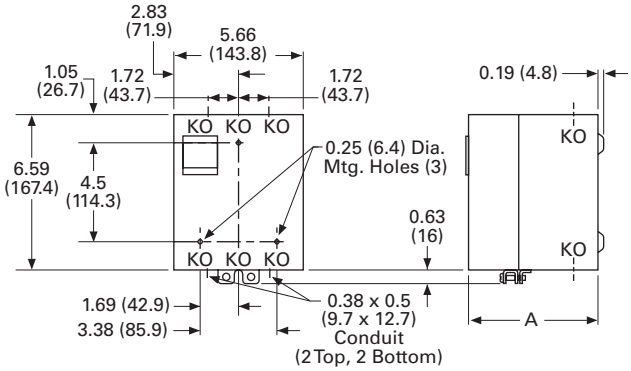

BF and BFD Relay Dimensions

Number of Poles	A BF Only	B BF w/Latch	C BF w/Timer	D BFD Only	E BFD w/Timer
4	3.22 (81.8)	6.22 (158.0)	5.88 (149.4)	4.03 (102.4)	7.06 (179.3)
8	4.19 (106.4)	7.19 (182.6)	6.88 (174.8)	4.97 (126.2)	8.00 (203.2)
12	4.81 (122.2)	7.81 (198.4)	7.50 (190.5)	5.63 (143.0)	8.66 (220.0)

NEMA 1 for BF, BFD, AR and ARD Dimensions

Poles	Catalog Number	A NEMA 1
Relays without Attachments		
All	**BF, AR, ARD**	5.34 (135.6)
4 – 8	**BFD**	5.34 (135.6)
10, 12	**BFD**	7.97 (202.4)
Relays with Attachments		
All	**BF, AR, ARD**	7.97 (202.4)

AR/ARD Series—Convertible Contact Industrial Control

Contents

Description	*Page*
D15 Series—Freedom 600 V Multipole	**V7-T3-142**
BF/BFD Series—Fixed Contact Industrial Control	**V7-T3-147**
AR/ARD Series—Convertible Contact Industrial Control	
Product Selection	**V7-T3-154**
Accessories	**V7-T3-155**
Options	**V7-T3-155**
Technical Data and Specifications	**V7-T3-156**
Dimensions	**V7-T3-157**
D26 Series—Type M, 600 Vac Multipole with Convertible Contacts	**V7-T3-158**
D26 Series—Type M, DC Multipole with Convertible Contacts	**V7-T3-163**

3

AR/ARD Series—Convertible Contact Industrial Control

Product Description

The AR/ARD relays are electromechanical convertible contact relays. AR relays are AC devices and the ARD is for DC applications.

Application Description

Type AR and ARD relays are designed for use on machine tools, process lines, conveyors and similar automatic and semi-automatic equipment.

Features and Benefits

Permanent Magnet Latch

By energizing the relay coil, the latch attachment "sets" (when the base relay's armature/crossbar assembly has closed) holding the relay ON, even after the relay coil has been de-energized. The clearing coil on the latch is energized to release the armature/crossbar assembly.

- Field mountable to four- and six-pole
- Latch plunger is adjustable
- Latch coil continuously rated
- Unlatching power requirements
  - Open gap: 24 VA
  - Closed gap: 7 VA
  - Burden: 4 watts AC, 6 watts DC

Surge Suppressor

- Mounts in contact cavity of AR relays
- Limits high transient voltages resulting from de-energizing relay coil or other electromechanical devices
- Protects sensitive instruments and solid-state devices
- 120 Vac maximum, not used on Vdc
- For noise suppression, see Catalog Number SS-56 starter mounted surge suppressor.

Operation

AR relays are available in either four- or six-pole configurations. AR relays are easily converted to eight- or 10-poles simply by adding a four-pole deck. In addition, mechanical latch attachments are available with four- and six-pole relays.

Contacts are convertible from NO to NC, to provide any combination desired up to a maximum of 10. For the ARD, the number of poles cannot exceed **four** NC in any pole configuration. Wide spacing of contacts simplifies installation, contact testing and maintenance. Contacts are electrically and mechanically isolated from each other. Overlap contacts are also available in one or two sets. These contacts should be mounted in the center pole positions. AC and DC contact cartridges should not be used in the same relay.

Standards and Certifications

- UL File No. E19223
- CSA File No. LR39402-6, LR54517 and LR54520

Reference Information

- ART, ARTD: IL 14510, IL 14485

Product Selection

When Ordering, Specify

- Catalog number of basic relay with 120/60, 110/50 AC coil from AR/ARD Relays table.
- If a coil voltage other than listed is required, select the suffix code from the Coil Voltage table below and substitute it for the last letter in the catalog number. Example: AR64**V** for a 110/60 AC coil.

AR/ARD Relays

AR/ARD Relays

Number of Poles	Contact NO	Contact NC	Blank Cavities	AR 600 Vac Relays 120/60, 110/50 AC Coil Catalog Number	ARD 600 Vdc Relays 120 DC Coil Catalog Number
4	0	0	4	**AR4A**	**ARD4S**
	2	0	2	**AR420A**	**ARD420S**
	4	0	0	**AR440A**	**ARD440S**
6	0	0	6	**AR6A**	**ARD6S**
	4	0	2	**AR640A**	—
	6	0	0	**AR660A**	**ARD660S**
8 ①	6	0	2	**AR860A**	**ARD860S** ②
	8	0	0	**AR880A**	**ARD880S**
10 ①	10	0	0	**AR10100A**	**ARD10100S**

Coil Voltage

AR Coils

Volts AC	Hz	Suffix Code
12	60	**F**
24	60	**I**
48	60	**G**
110	60	**V**
110/120	50/60	**A**
208	60	**B**
220/240	50/60	**W**
277	60	**C**
380/440	50/60	**H**
440/480	50/60	**X**
550	60	**D**
550/600	50/60	**E**

ARD Coils

Volts DC	Suffix Code
12	**D**
24	**L**
48	**M**
95	**B**
120	**S**
130	**U**
240	**T**

Contact Cartridges—600 V

Terminal Type	Standard Contact Cartridge Catalog Number ③	Overlap Contact Cartridge Catalog Number ④
AC Cartridges		
With clamp terminals	**ARC**	**AROC**
With screw terminals	**ARCR**	**AROCR**
DC Cartridges		
With clamp terminals	**ARDC**	**ARDOC**
With screw terminals	**ARDCR**	**ARDOCR**

Notes

① Will not accept top-mounted latch or timers.
② Contact Customer Support Center for availability.
③ Standard cartridges are sold in cartons of four cartridges. Catalog number is for single cartridge.
④ Overlap contact cartridges are sold in sets of two cartridges. Catalog number is for sets of two.

ARML Permanent Magnet Latch for AR/ARD Relays

Permanent Magnet Latch

Operating Volts	Coil Hz	Catalog Number
For AC Control Circuits		
24	60	**ARMLI**
48	60	**ARMLG**
120	60/50	**ARMLA**
240	60/50	**ARMLW**
For DC Control Circuits		
24	—	**ARMLL**
48	—	**ARMLM**
120	—	**ARMLS**
240	—	**ARMLT**

Accessories

Four-Pole Top Deck Adder

- Increases contact capacity from four/six-poles to eight/10-poles
- Mounts on top of basic relay using three screws
- Will not interfere with wiring, testing or convertible cartridges
- Screw terminals for ring connectors available; to order, add Suffix **R** to catalog number listed below

Four-Pole Top Deck Adder

Four-Pole Top Deck Adder

No. of Poles	Contacts NO	Contacts NC	Blank Cavities	Catalog Number
With 600 Vac Cartridges				
4	2	0	2	**ARA20**
	4	0	0	**ARA40**
With 600 Vdc Cartridges				
4	2	0	2	**ARDA20**
	4	0	0	**ARDA40**

ARSS Surge Suppressor for AR Relays

Surge Suppressor

	Catalog Number
Surge Suppressor	**ARSS**

Options

Convertible Contacts

Description	Code Letter	Catalog Number
AR and ARD relays listed are supplied with NO contacts that are easily converted to NC. If both NO and NC poles are required, order by catalog number. Example: four-pole relay with 1NO and 3NC contacts, order AR4**13**A.	①	—

Screw Terminals

Description	Code Letter	Catalog Number
For ring-type connectors, add suffix **R** to the catalog number. Example: AR420A**R**.	**R**	—

Overlapping Contacts

Description	Code Letter	Catalog Number
NO contact closes before corresponding NC contact opens — supplied as NO/NC sets of two cartridges. Insert letter **S** after relay type designation in listed catalog number. Example: AR402A**S**. Specify the number of sets required: **S** for one set and **S2** for two sets.	**S** or **S2** ①	—

Note

① Consult Customer Support Center for availability.

Technical Data and Specifications

General

Contact Ratings—600 Vac Cartridge NEMA A600

Volts	Maximum Current Cont.	Make	Break	Maximum VA Make	Break
120	10	60	6	7200	720
240	10	30	3	7200	720
480	10	15	1.5	7200	720
600	10	12	1.2	7200	720

DC Cartridges—NEMA P600

Volts	Maximum Current Continuous	Make or Break	Maximum VA Make or Break
125	5	1.10	138
250	5	0.55	138
600	5	0.20	138

Resistive Rating

125 Vdc	3 A
250 Vdc	1.5 A

Coil Power Requirements

AC	96 VA open, 14 VA closed
DC	14 watts open, 250 V max.

Voltage	AR Relays	ARD Relays
Pickup voltage (max.)	85%	65%
Dropout voltage (min.)	60%	15%
Voltage (max.)	110%	110%

Dimensions

Approximate Dimensions in Inches (mm)

Four- and Six-Pole with Four-Pole Adder, Solid-State Timer and Mechanical Latch

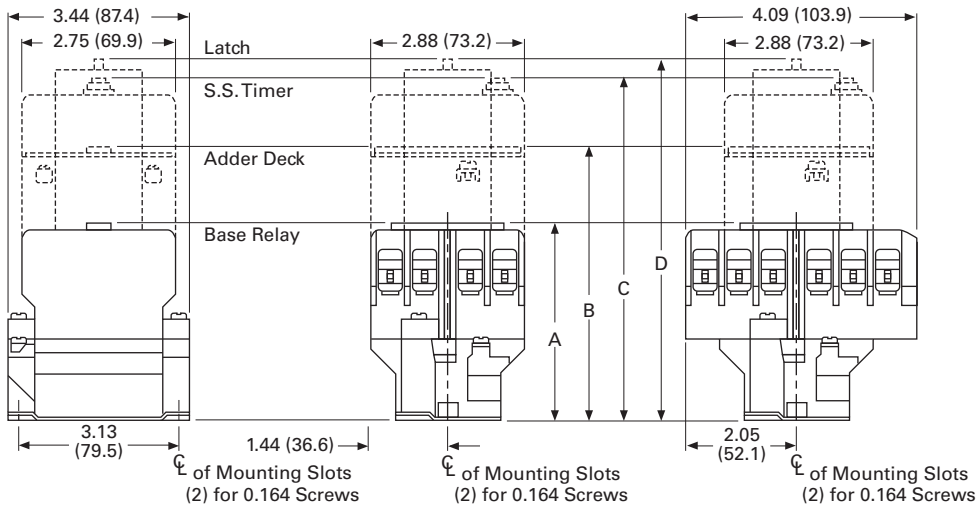

End View, 4- and 6-Pole **Side View, 4-Pole** **Side View, 6-Pole**

Four- and Six-Pole with Four-Pole Adder, Solid-State Timer and Mechanical Latch

Relay Catalog Number	A Four-, Six-Pole Relays	B Relay Adder	C Relay with Timer	D Relay with Latch
AR	3.56 (90.4)	4.94 (125.5)	6.00 (152.4)	6.39 (162.3)
ARD	4.63 (117.6)	6.00 (152.4)	7.06 (179.3)	7.45 (189.2)

Enclosures—NEMA 1 for BF, BFD, AR and ARD

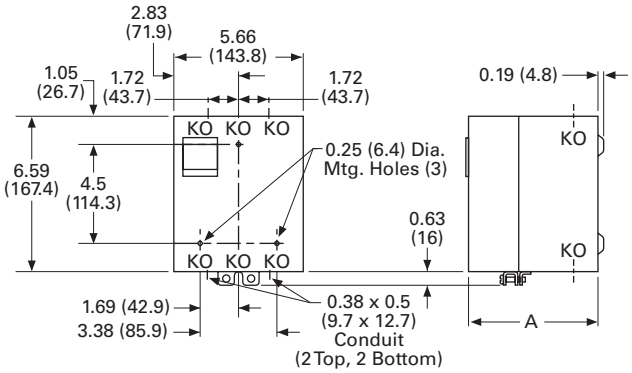

Enclosures—NEMA 1 for BF, BFD, AR and ARD

Poles	Catalog Number	Dimension A NEMA 1
Relays without Attachments		
All	**BF, AR, ARD**	5.34 (135.6)
4–8	**BFD**	5.34 (135.6)
10, 12	**BFD**	7.97 (202.4)
Relays with Attachments		
All	**BF, AR, ARD**	7.97 (202.4)

D26 Series—Type M, 600 Vac Multipole with Convertible Contacts

Contents

Description	*Page*
D15 Series—Freedom 600 V Multipole	**V7-T3-142**
BF/BFD Series—Fixed Contact Industrial Control	**V7-T3-147**
AR/ARD Series—Convertible Contact Industrial Control	**V7-T3-153**
D26 Series—Type M, 600 Vac Multipole with Convertible Contacts	
Product Selection	**V7-T3-159**
Technical Data and Specifications	**V7-T3-161**
Dimensions	**V7-T3-162**
D26 Series—Type M, DC Multipole with Convertible Contacts	**V7-T3-163**

D26 Series—Type M, 600 Vac Multipole with Convertible Contacts

Product Description

Relays can be ordered as complete devices in any pole combination up to a maximum of 12NO or 8NC and 4NO poles, or can be assembled from components shown on **Page V7-T3-160**.

Relay base assembly (**D26MB**) will accept from 1 to 4 rear poles (**D26MPR**, **D26MPS** and/or **D26MPL**).

Features

Contact poles D26MPR and D26MPF in 2- through 8-pole relays are convertible NO to NC or vice versa. Simply reverse the terminal screws and rotate the unit pole 180 ° (in either direction).

Options

Adding a front deck, the total number of poles can be increased to 8, all convertible NO to NC.

Adding a **D26MF**, 4-pole fixed NO attachment, builds a 12-pole relay with 8 convertible poles and 4 fixed NO poles.

Relays with mechanical latch are available in any convertible pole combination up to eight poles maximum.

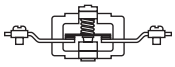

Normally Closed Contact

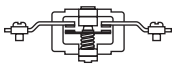

Normally Open Contact

To obtain overlapping contacts, use **D26MPS** (NO early closing) and **D26MPL** (NC late opening) rear poles, in related circuits.

Standards and Certifications

- UL listed—Class No. NKCR2, File E1230(N)
- CSA certified—File LR353

Product Selection

Complete AC Relays

When Ordering, Specify

- Catalog number and magnet coil suffix letter.
- Example: For a 4-pole relay having 4NO contacts, order Catalog Number **D26MR40**, with a 120 V, 60 Hz coil, order **D26MR40A**.
- For fast delivery and minimum inventory, it is recommended that component parts or complete relays with NO poles be ordered.

4-Pole

4-Pole with Latch

4-Pole with Pneumatic Timer Attachment

Complete AC Relays—Open Type

Number of Contacts	Type of Contact NO (Form A)	NC (Form B)	Relay Only Catalog Number	Relay with Mechanical Latch Catalog Number
2	2	0	**D26MR20**	**D26MR202**
	1	1	**D26MR11**	**D26MR112**
	0	2	**D26MR02**	**D26MR022**
3	3	0	**D26MR30**	**D26MR302**
	2	1	**D26MR21**	**D26MR212**
	1	2	**D26MR12**	**D26MR122**
	0	3	**D26MR03**	**D26MR032**
4	4	0	**D26MR40**	**D26MR402**
	3	1	**D26MR31**	**D26MR312**
	2	2	**D26MR22**	**D26MR222**
	1	3	**D26MR13**	**D26MR132**
	0	4	**D26MR04**	**D26MR042**
6 ①	6	0	**D26MR60**	**D26MR602**
	5	1	**D26MR51**	**D26MR512**
	4	2	**D26MR42**	**D26MR422**
	3	3	**D26MR33**	**D26MR332**
	2	4	**D26MR24**	**D26MR242**
	1	5	**D26MR15**	**D26MR152**
	0	6	**D26MR06**	**D26MR062**
8 ①	8	0	**D26MR80**	**D26MR802**
	7	1	**D26MR71**	**D26MR712**
	6	2	**D26MR62**	**D26MR622**
	5	3	**D26MR53**	**D26MR532**
	4	4	**D26MR44**	**D26MR442**
	3	5	**D26MR35**	**D26MR352**
	2	6	**D26MR26**	**D26MR262**
	1	7	**D26MR17**	**D26MR172**
	0	8	**D26MR08**	**D26MR082**

Magnet Coil Selection

Volts/Hertz	Suffix Code
120/60–110/50	**A**
240/60–220/50	**B**
208/60 ②	**E**
24/60	**T**
277/60	**H**

Volts/Hertz	Suffix Code
32/60 ②	**V**
12/60 ②	**R**
6/60	**P**
380/50 ②	**L**
480/60 or 440/50	**C**
600/60 or 550/50 ②	**D**

Notes

① **10- and 12-Poles**: The 6 and 8 contact relays (without mechanical latch only) listed above can be provided with four additional NO non-convertible contacts. Add suffix number **4** to above listed catalog number plus magnet coil suffix. Example: For a 12 contact relay, order D26MR80**4A**.

② Consult Customer Support Center for availability.

Relay Component Parts Location

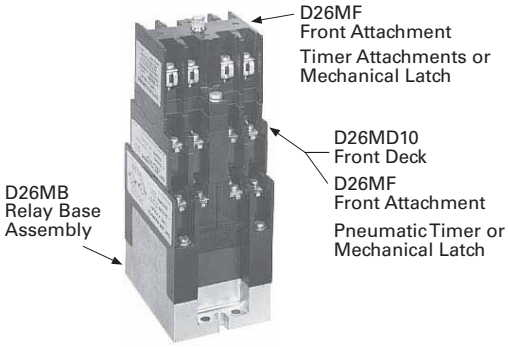

Relay with Pneumatic Timer Attachment Factory Installed (without Relay Contacts)

Contact Positions ①	Timer Operation	Catalog Number ②
4	ON delay	**D26MR005**
4	OFF delay	**D26MR006**

The relays listed above will accept up to four catalog number D26MPR contacts (convertible—NO or NC) for instantaneous operation. Order contacts separately.

For additional information on timer attachment, see **Page V7-T3-161**.

For assembly of relays from component parts and relay accessories, see components tables below.

Rear Pole

Front Pole

Separate Contacts

Description	Catalog Number
Convertible Contacts	
Rear pole—NO	**D26MPR**
Rear pole—NC	**D26MPR02**
Front pole—NO	**D26MPF**
Front pole—NC	**D26MPF02**
Gold plated (for low power circuits)	
Rear pole—NO	**D26MPR03**
Front pole—NO	**D26MPF03**
Non-Convertible Contacts	
Rear pole NO early closing ③	**D26MPS**
Rear pole NC late opening ③	**D26MPL**

Relay Base Assembly

Relay Base Assembly (without Poles)

Description	Catalog Number
Relay base assembly	**D26MB** ④

Basic four-pole D26 relay without contacts. Provision for adding one to four poles as needed, **D26MPR, D26MPL** and/or **D26MPS** rear pole type.

Rear Pole

Front Deck (Convertible Contact Poles)

Description	Catalog Number
Front Deck with ...	
1NO contact pole	**D26MD10**
2NO contact poles	**D26MD20**
4NO contact poles	**D26MD40**

Provides up to four additional front pole type D26MPF contacts. Convertible, NO to NC.

Four-Pole Front Attachment

Four-Pole Front Attachment (4NO Fixed Circuit)

Description	Catalog Number
Front attachment	**D26MF**

Can be added to any two- to eight-pole Type M, D26 relay to provide up to a 12-pole relay. Four NO, non-convertible contacts are included in this assembly.

Notes

① Number of available instantaneous contact positions (order contacts separately—Catalog Number D26MPR).
② Consult Customer Support Center for availability.
③ To obtain overlapping contacts, these two special poles must be used in related circuits.
④ Add magnet coil suffix letter, see **Page V7-T3-159**. Example: D26MB**A**.

Relay State Indicating Light

Relay State Indicating Light

Description	Catalog Number
120 Vac, 50/60 Hz	**D26MAP120**
240 Vac, 50/60 Hz	**D26MAP240**

Light provided with leads and bracket for mounting on two- to 12-pole relays. May be used to monitor state of magnet coil or relay contact operation.

Pneumatic Timer Attachment

Pneumatic Timer Attachment

Description	Catalog Number
ON delay	**D26MTE**
OFF delay	**D26MTD**

Attachment mounts on any 0- to four-pole D26 relay without latch. Timer unit has DPDT timed contacts (circuits in each pole must be the same polarity). Adjustable timing range—0.1 to 180 seconds, repeat accuracy ±10%. Units are convertible from OFF delay to ON delay or vice versa.

Mounting Channel

Mounting Channel

Description	Catalog Number
10 in length for 4 relays	**D26MC4**
20 in length for 8 relays	**D26MC8**
30 in length for 12 relays	**D26MC12**
40 in length for 16 relays	**D26MC16**

Pre-spaced mounting for adjacent relay installation. Indexed for cutting to desired length. Captive mounting screws provided in channel for easier installation.

Manual Test Accessory

Manual Test Accessory

Description	Catalog Number
Manual test accessory	**D26MTA**

Tool to manually hold relays in the energized position for circuitry testing on completed panel. (10 per box, order in multiples of 10.)

Transient Suppressor

Transient Suppressor

Description	Catalog Number
Magnet coil transient suppressor	**D26MAS1**
Latch coil transient suppressor	**D26MAS2**

May be mounted on any 120 Vac relay magnet coil or latch coil or 120 Vdc latch coil—connects directly across coil terminals. All DC magnet coils have a built-in varistor for transient suppression. Limits high voltage transients produced in the circuit when power is removed from the coil.

Technical Data and Specifications

General

Contact Ratings (Amperes) A600

AC Volts ①	Make and Emergency Interrupting Capacity	Break	Continuous Thermal Rating
120	60	6	10
240	30	3	10
480	15	1.5	10
600	12	1.2	10

Coil Power

Relay	Watts Inrush	Watts Sealed	VA Inrush	VA Sealed	Operating Time Range in Milliseconds
Two- to 12-pole	95.0	9	155	22	Pickup: 6–13
Latch coil	18.5	11	41	17	Dropout: 8–26

Note

① For DC contact ratings, see **Page V7-T3-165**.

Dimensions

Approximate Dimensions in Inches (mm)

AC and DC D26 Relays

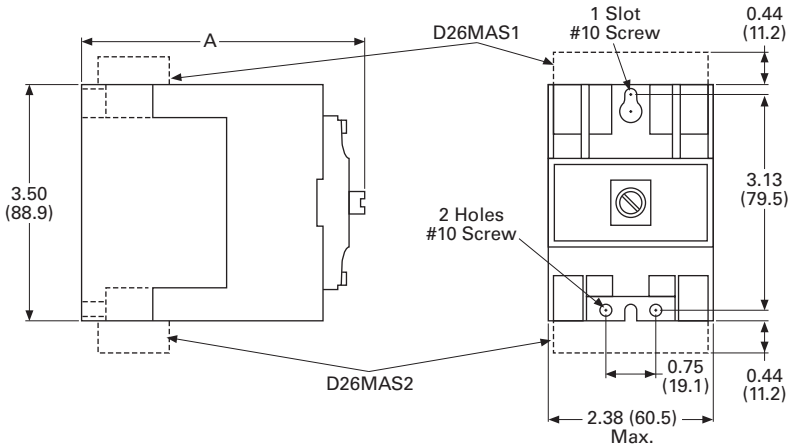

AC Relay D26	DC Relay D26	Dimension A	Ship. Wt. Lbs (kg)
1–4 poles	1–3 poles	4.00 (101.6)	2.5 (1.1)
1–4 poles with timer D26 or D87	1–3 poles with timer D26 or D87	6.00 (152.4)	3.3 (1.5)
1–4 poles with latch	1–2 poles with latch	6.13 (155.7)	3.5 (1.6)
1–4 poles with D26MF	1–3 poles with D26MF	5.81 (147.6)	2.8 (1.3)
5–8 poles	4–7 poles	5.25 (133.4)	2.8 (1.3)
5–8 poles with timer D87	4–7 poles with timer D87	7.25 (184.2)	3.5 (1.6)
5–8 poles with latch	3–6 poles with latch	7.31 (185.7)	3.8 (1.7)
9–12 poles	8–11 poles	7.00 (177.8)	3.0 (1.4)

Mounting Channel

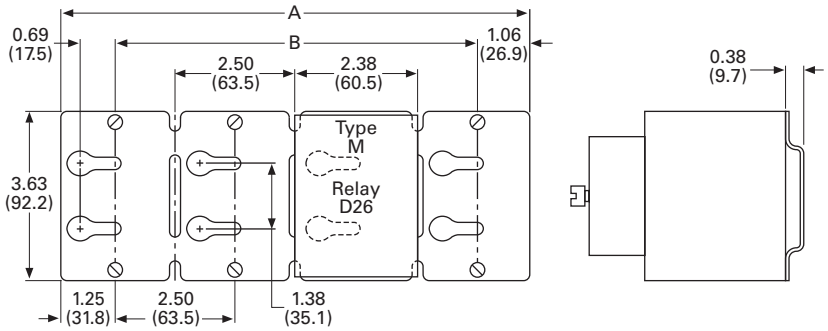

Catalog Number	Dimension A	Dimension B
D26MC16	40 (1016)	37.5 (952.5)
D26MC12	30 (762)	27.5 (698.5)
D26MC8	20 (508)	17.5 (444.5)
D26MC4	10 (254)	7.5 (190.5)

Note: Channel mounts through keyholes with #10 screws (two each end and one every fourth relay). Relays mount with screws captive in channel. All screws must be tightened firmly.

D26 Series—Type M, DC Multipole with Convertible Contacts

Contents

Description	*Page*
D15 Series—Freedom 600 V Multipole	**V7-T3-142**
BF/BFD Series—Fixed Contact Industrial Control	**V7-T3-147**
AR/ARD Series—Convertible Contact Industrial Control	**V7-T3-153**
D26 Series—Type M, 600 Vac Multipole with Convertible Contacts	**V7-T3-158**
D26 Series—Type M, DC Multipole with Convertible Contacts	
Product Selection	**V7-T3-164**
Technical Data and Specifications	**V7-T3-165**
Dimensions	**V7-T3-166**

D26 Series—Type M, DC Multipole with Convertible Contacts

Product Description

Type M, DC multipole relays are physically and mechanically similar to the (D26) Type M AC relays described on **Page V7-T3-159**. They differ only in the electrical ratings and available pole combinations due to the use of a normally closed late opening, coil clearing contact, factory wired to the pickup winding of the magnet coil. (Contact is shown as L in figure to the right.) Magnet coil has built-in varistor for transient suppression.

The mechanically latched relay has one extra contact, normally open early closing, factory wired in series with the winding of the intermittent rated latch coil. (Contact is shown as S in figure to the right.)

Component parts for these relays are the same as those listed for the (D26) Type M AC relays on **Page V7-T3-159**, except for the Indicating Light, which is not applicable to a DC relay.

Contact poles D26MPR and D26MPF in 2- to 7-pole relays are convertible NO to NC or vice versa. Simply reverse the terminal screws and rotate the unit pole 180 ° (in either direction).

Latch Operation

With the latch coil de-energized, energizing the relay coil will pick up the relay and mechanically latch it in the pickup position. With the relay coil de-energized, energizing the latch coil will allow the relay to drop out.

Convertible Contacts

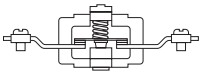

Normally Closed Contact

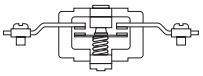

Normally Open Contact

DC Type M Relay

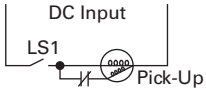

L = NC Late Opening

DC Type M Relay with Latch

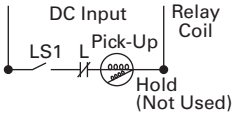

L = NC Late Opening

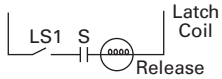

S = NO Early Closing

Product Selection

Complete DC Relays

When Ordering, Specify

- Catalog number and magnet coil suffix letter.
- Example: For a 4-pole relay having 4NO contacts, order Catalog Number **D26MRD40**, with a 120 Vdc coil, order **D26MRD40A1**.

3-Pole

3-Pole with Latch

Complete DC Relays—Open Type

Number of Contacts	Type of Contact ① NO (Form A)	NC (Form B)	Relay Only Catalog Number	Relay with Mechanical Latch Catalog Number
2	2	0	**D26MRD20**	**D26MRD202**
	1	1	**D26MRD11**	**D26MRD112**
	0	2	**D26MRD02**	**D26MRD022**
3	3	0	**D26MRD30**	**D26MRD302**
	2	1	**D26MRD21**	**D26MRD212**
	1	2	**D26MRD12**	**D26MRD122**
	0	3	**D26MRD03**	**D26MRD032**
4	4	0	**D26MRD40**	**D26MRD402**
	3	1	**D26MRD31**	**D26MRD312**
	2	2	**D26MRD22**	**D26MRD222**
	1	3	**D26MRD13**	**D26MRD132**
	0	4	**D26MRD04**	**D26MRD042**
6 ②	6	0	**D26MRD60**	**D26MRD602**
	5	1	**D26MRD51**	**D26MRD512**
	4	2	**D26MRD42**	**D26MRD422**
	3	3	**D26MRD33**	**D26MRD332**
	2	4	**D26MRD24**	**D26MRD242**
	1	5	**D26MRD15**	**D26MRD152**
	0	6	**D26MRD06**	**D26MRD062**
7 ②	7	0	**D26MRD70**	—
	6	1	**D26MRD61**	—
	5	2	**D26MRD52**	—
	4	3	**D26MRD43**	—
	3	4	**D26MRD34**	—
	2	5	**D26MRD25**	—
	1	6	**D26MRD16**	—
	0	7	**D26MRD07**	—

Magnet Coil Selection

Volts/Hertz	Suffix Code
12	**R1**
24	**T1**
48	**W1**

Volts/Hertz	Suffix Code
120	**A1**
240	**B1**

Notes

① Relay has additional factory wired normally closed coil clearing contact (see diagram).

② **10- and 11-Poles**: The 6 and 7 contact relays (without mechanical latch only) listed above can be provided with four additional NO non-convertible contacts. Add suffix number **4** to above listed catalog number plus magnet coil suffix. Example: For an 11 contact relay, order D26MRD70**4A1**.

3-Pole with Timer Attachment

Relay with Pneumatic Timer Attachment (without Relay Contacts)

Contact Positions ①	Timer Operation	Catalog Number
3	ON delay	**D26MRD005**
3	OFF delay	**D26MRD006**

The relays listed above will accept up to three catalog number D26MPR contacts (convertible—NO or NC) for instantaneous operation.

Order contacts separately. For additional information on timer attachment, see **Page V7-T3-161**.

Technical Data and Specifications

General

Contact Ratings (Amperes) ②

DC Volts	Inductive Make/Break	Resistive Make/Break
28	7.0	10.0
48	2.5	10.0
120	1.1	2.0
240	0.2	0.4

Coil Power			Operating Time
	Watts		
Relay	Inrush	Sealed	Average Milliseconds
Two- to 11-pole	168	13.2	Pickup: 10
Latch coil	21.6 intermittent	21.6 intermittent	Dropout: 16

Notes

① Number of available instantaneous contact positions (order contacts separately—Catalog Number D26MPR).

② Contact ratings do not apply to contacts D26MPL and D26MPS. For AC contact ratings, see **Page V7-T3-161**.

Dimensions

Approximate Dimensions in Inches (mm)

AC and DC D26 Relays

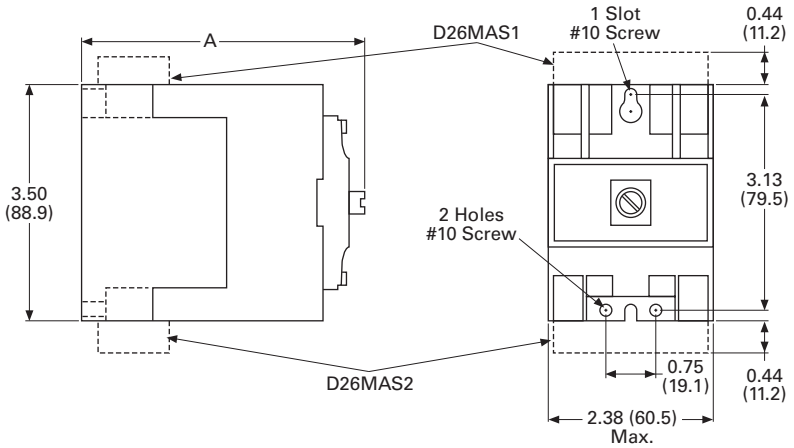

AC Relay D26	DC Relay D26	Dimension A	Ship. Wt. Lbs (kg)
1–4 poles	1–3 poles	4.00 (101.6)	2.5 (1.1)
1–4 poles with timer D26 or D87	1–3 poles with timer D26 or D87	6.00 (152.4)	3.3 (1.5)
1–4 poles with latch	1–2 poles with latch	6.13 (155.7)	3.5 (1.6)
1–4 poles with D26MF	1–3 poles with D26MF	5.81 (147.6)	2.8 (1.3)
5–8 poles	4–7 poles	5.25 (133.4)	2.8 (1.3)
5–8 poles with timer D87	4–7 poles with timer D87	7.25 (184.2)	3.5 (1.6)
5–8 poles with latch	3–6 poles with latch	7.31 (185.7)	3.8 (1.7)
9–12 poles	8–11 poles	7.00 (177.8)	3.0 (1.4)

Mounting Channel

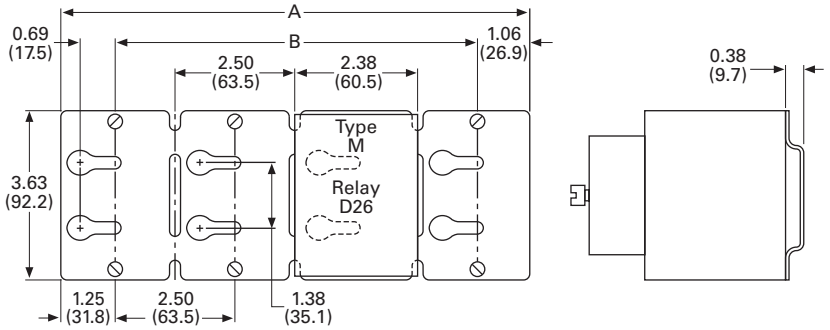

Catalog Number	Dimension A	Dimension B
D26MC16	40 (1016)	37.5 (952.5)
D26MC12	30 (762)	27.5 (698.5)
D26MC8	20 (508)	17.5 (444.5)
D26MC4	10 (254)	7.5 (190.5)

Note: Channel mounts through keyholes with #10 screws (two each end and one every fourth relay). Relays mount with screws captive in channel. All screws must be tightened firmly.

Timing Relays

Contents

Description ***Page***

Timing Relays
- Universal TR Series **V7-T3-172**
- TR Series **V7-T3-176**
- TMR5 Series **V7-T3-179**
- TMR6 Series **V7-T3-183**
- TMRP Series **V7-T3-185**

Product Selection Guide

Function Code Cross-Reference Guide

Function	Description	Timer Series Universal TR	TR	TMR5	TMR6	TMRP	E5-248 ③
1	Asymmetrical flasher, pause first	Ip	—	R/P	—	—	RC DLY
2	Asymmetrical flasher, pulse first	Ii	—	Y	—	—	RC
3	ON delay and OFF delay with control contact	ER	—	—	—	—	—
4	ON delay and single shot leading edge voltage controlled	EWu	—	—	—	—	—
5	ON delay and single shot leading edge control contact	EWs	—	—	—	—	—
6	Single shot leading and single shot trailing edge with control contact	WsWa	—	—	—	—	—
7	Pulse sequence monitoring	Wt	—	—	—	—	—
8	ON delay, power triggered	E	A ①	N	—	A	—
9	Single shot leading edge voltage controlled	Wu	B ①	T	—	C	—
10	OFF delay/signal OFF delay	R	E ②	F	—	D	OFF DLY
11	Single shot leading edge with control input	Ws	F ②	C/G	—	H	SS
12	Single shot trailing edge with control input	Wa	—	—	—	—	—
13	ON delay control signal start, trailing edge OFF	Es	—	—	—	—	—
14	Flasher, pause first	Bp	C ①	L	—	B	—
15	Retriggerable single shot	—	—	W/D	—	E	SS
16	Flasher, ON first	—	D ①	—	—	F	—
17	ON delay control signal start, leading edge OFF	—	A ②	—	—	—	ON DLY
18	Flasher—control signal start, pause first	—	B ②	—	—	—	RC DLY
19	Flasher—control signal start, ON first	—	C ②	—	—	—	RC
20	Signal ON/OFF delay	—	D ②	—	—	—	—
21	ON/OFF delay	—	—	—	—	I	—
22	Single pulse generator	—	—	—	—	G	OS
23	Memory latch	—	—	—	—	J	—
24	True OFF delay	—	—	—	X	—	—

Notes

① Applies to TRN model only.
② Applies to TRF model only.
③ The E5-248 is battery powered and has three programmable trigger functions. This product may perform somewhat differently from the standard timing relays. Refer to the operator instructions for details.

Product Overview

Timer Function Descriptions

Function #1—Universal TR, TMR5, E5-248

Asymmetrical Flasher, Pause First Repeat Cycle, OFF/ON Delay

When the supply voltage U is applied, the set interval t1 begins. After the interval t1 has expired, the output relay R switches into ON position and the set interval t2 begins. After the interval t2 has expired, the output relay switches into OFF position. The output relay is triggered at the ratio of t1:t2 until the supply voltage is interrupted.

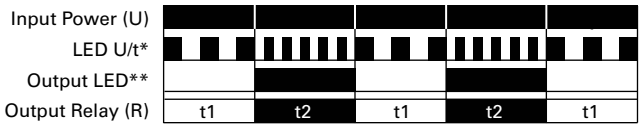

Function #2—Universal TR, TMR5, E5-248

Asymmetrical Flasher, Pulse First Repeat Cycle, ON/OFF Delay

When the supply voltage U is applied, the output relay R switches into the ON position and the set interval t1 begins. After the interval t1 has expired, the output relay R switches into OFF position and the set interval t2 begins. After the interval t2 has expired, the output relay switches into ON position. The output relay is triggered at the ratio of t1:t2 until the supply voltage is interrupted.

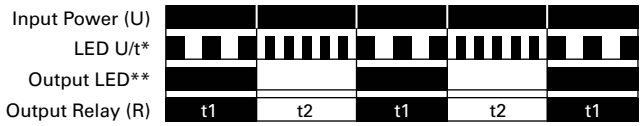

Function #3—Universal TR

ON Delay and OFF Delay with Control Contact

The supply voltage U must be constantly applied to the device. When the control contact S is closed, the set interval t1 begins. After the interval t1 has expired, the output relay R switches into ON position. If the control contact is opened, the set interval t2 begins. After the interval t2 has expired, the output relay R switches into OFF position. If the control contact is opened before the interval t1 has expired, the interval already expired is erased and is restarted with the next cycle.

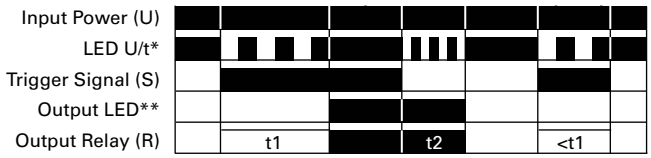

Function #4—Universal TR

ON Delay and Single Shot Leading Edge Voltage Controlled

When the supply voltage U is applied, the set interval t1 begins. After the interval t1 has expired, the output relay R switches into ON position and the set interval t2 begins. After the interval t2 has expired, the output relay switches into OFF position. If the supply voltage is interrupted before the interval t1 + t2 has expired, the interval already expired is erased and is restarted when the supply voltage is next applied.

Function #5—Universal TR

ON Delay and Single Shot Leading Edge Control Contact

The supply voltage U must be constantly applied to the device. When the control contact S is closed, the set interval t1 begins. After the interval t1 has expired, the output relay R switches into ON position and the set interval t2 begins. After the interval t2 has expired, the output relay R switches into OFF position. During the interval, the control contact is ignored. A new cycle can only be initiated when the cycle has been completed.

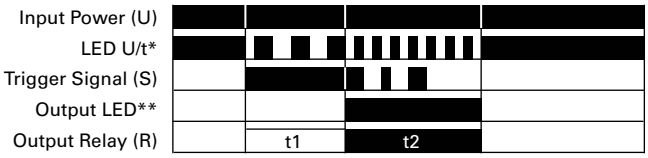

Function #6—Universal TR

Single Shot Leading and Single Shot Trailing Edge with Control Contact
Asymmetrical Signal ON/OFF Delay

The supply voltage U must be constantly applied to the device. When the control contact S is closed, the output relay R switches to the ON position and the set interval t1 begins. After the interval t1 has expired, the output relay R switches into OFF position. If the control contact S is opened, the output relay again switches to the ON position and the set interval t2 begins. After the interval t2 has expired, the output relay R switches into OFF position. During the interval, the control contact is ignored. During the interval, the control contact can be operated any number of times.

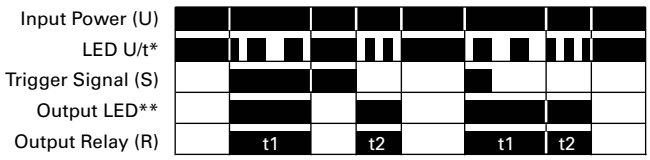

Function #7—Universal TR
Pulse Sequence Monitoring

When the supply voltage U is applied, the set interval t1 begins and the output relay R switches to the ON position. After the interval t1 has expired, the interval t2 begins. As long as the control switch S is closed and opened within the interval t2, the relay will remain in the ON position. If the control switch is not closed and opened within the interval t2, the relay will change to the OFF position until supply voltage U is interrupted and reapplied.

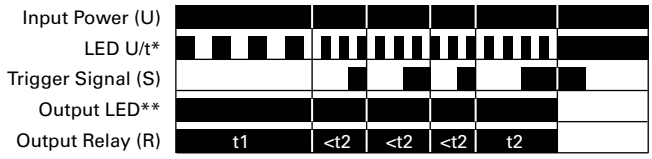

Function #8—Universal TR, TRN, TMR5, TMRP
ON Delay, Power Triggered
Delay ON Make

When the supply voltage U is applied, the set interval t begins. After the interval t has expired, the output relay R switches to the ON position. The relay will remain in that position until supply voltage U is interrupted.

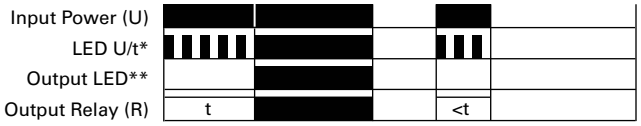

Function #9—Universal TR, TRN, TMR5, TMRP
Single Shot Leading Edge Voltage Controlled
Interval ON/Interval (Power Start)

When the supply voltage U is applied, the output relay R switches to the ON position and set interval t begins. After the interval t has expired, the output relay R switches to the OFF position. The relay will remain in that position until supply voltage U is interrupted. If the supply voltage is interrupted prior to interval t timing out, the relay will immediately switch to the OFF position.

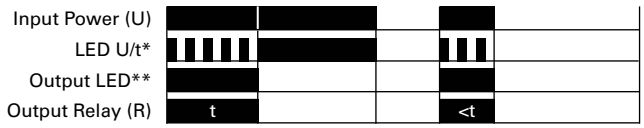

Function #10—Universal TR, TRF, TMR5, TMRP, E5-248
OFF Delay/Signal OFF Delay
Delay ON Release

The supply voltage U must be constantly applied to the device. When the control contact S is closed, the output relay R switches to the ON position. When the control contact is opened, interval t begins. After the interval t has expired, the output relay R switches to the OFF position. If the control contact S is closed before interval t expires, the output relay will remain in the ON position until the control switch opens, at which time the interval t will begin again.

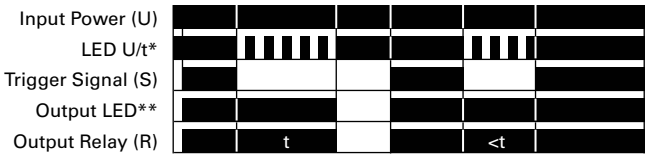

Function #11—Universal TR, TRF, TMR5, TMRP, E5-248
Single Shot Leading Edge with Control Input
Single Shot/One Shot (Signal Start)/Momentary Interval

The supply voltage U must be constantly applied to the device. When the control contact S is closed, the output relay R switches to the ON position and the set interval t begins. After the interval t has expired, the output relay R switches to the OFF position. The control contact is ignored during the interval t, and a new cycle cannot be started until the set interval t has timed out.

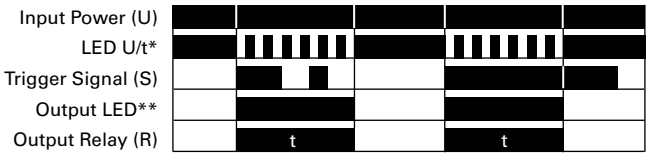

Function #12—Universal TR
Single Shot Trailing Edge with Control Input

The supply voltage U must be constantly applied to the device. When the control contact S is closed and reopened, the output relay R switches to the ON position and the set interval t begins. After the interval t has expired, the output relay R switches to the OFF position. The control contact is ignored during the interval t, and a new cycle must be started after the set interval t has timed out.

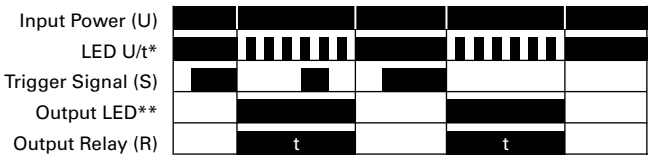

Function #13—Universal TR
ON Delay Control Signal Start, Trailing Edge OFF

The supply voltage U must be constantly applied to the device. When the control switch S is applied, the set interval t begins. After the interval t has expired, the output relay R switches to the ON position. The relay will remain in that position until the control switch opens. If the control switch is opened prior to interval t timing out, the relay will remain in the OFF position and any elapsed time will be erased.

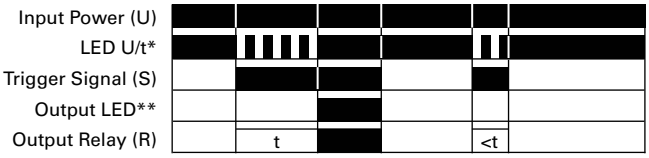

Function #14—Universal TR, TRN, TMR5, TMRP
Flasher, Pause First
Cycle 1 (Power Start, OFF First)

When the supply voltage U is applied, the set interval t begins. After the interval t has expired, the output relay R switches to the ON position and set interval t will begin again. After interval t has expired, the relay will switch to the OFF position for the set interval t. This cycle will repeat at a 1:1 ratio until supply voltage U is interrupted.

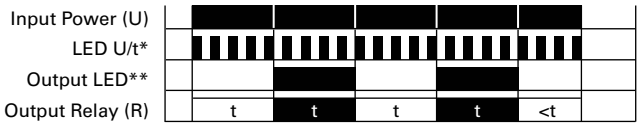

Function #15—TMR5, TMRP, E5-248
Watchdog
Retriggerable Single Shot

The supply voltage U must be constantly applied to the device. When the control switch S is applied, the relay switches to the ON position and the set interval t begins. After the interval t has expired, the output relay R switches to the OFF position. Closing the control switch during interval t will reset the time. Continuous cycling of the trigger signal at a rate faster than the preset time will cause the relay to remain in the ON position.

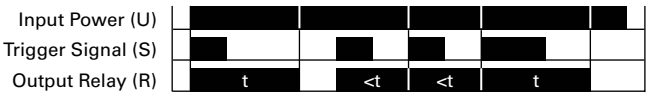

Function #16—TRN, TMRP
Flasher, ON First
Cycle 3 (Power Start, ON First)

When the supply voltage U is applied, the relay switches to the ON position and set interval t begins. After the interval t has expired, the output relay R switches to the OFF position and set interval t will begin again. After interval t has expired, the relay will again switch to the ON position for the set interval t. This cycle will repeat at a 1:1 ratio until supply voltage U is interrupted.

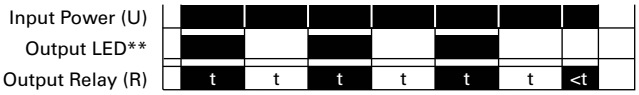

Function #17—TRF, E5-248
ON Delay Control Signal Start, Leading Edge OFF

The supply voltage U must be constantly applied to the device. When the control switch S is applied, the set interval t begins. After the interval t has expired, the output relay R switches to the ON position. The relay will remain in that position until the control switch has opened and closed. If the control switch is opened and closed prior to interval t timing out, the relay will remain in the OFF position and any elapsed time will be erased.

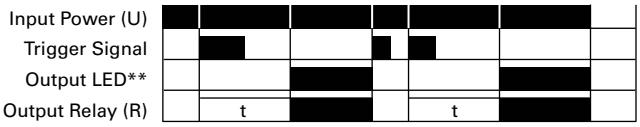

Function #18—TRF, E5-248
Flasher—Control Signal Start, Pause First

The supply voltage U must be constantly applied to the device. When the control switch S is closed, the set interval t begins. After the interval t has expired, the output relay R switches to the ON position and set interval t will begin again. After interval t has expired, the relay will switch to the OFF position for the set interval t. This cycle will repeat at a 1:1 ratio until supply voltage U is interrupted. The control switch is ignored during the cycle.

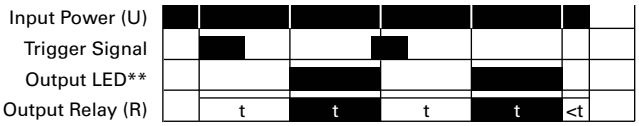

Function #19—TRF, E5-248
Flasher—Control Signal Start, ON First

The supply voltage U must be constantly applied to the device. When the control switch S is closed, the relay switches to the ON position and set interval t begins. After the interval t has expired, the output relay R switches to the OFF position and set interval t will begin again. After interval t has expired, the relay will again switch to the ON position for the set interval t. This cycle will repeat at a 1:1 ratio until supply voltage U is interrupted. The control switch is ignored during the cycle.

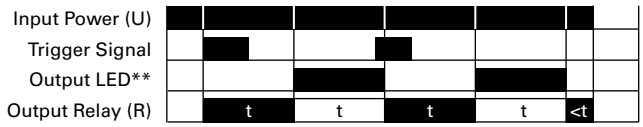

Function #20—TRF
Signal ON/OFF Delay

The supply voltage U must be constantly applied to the device. When the control switch S is closed, the relay switches to the ON position and set interval t begins. After the interval t has expired with the control switch still closed, the output relay R switches to the OFF position. When the control switch is opened, the relay will switch to the ON position again and the interval t will begin. If the control switch is closed and opened within the interval t, the relay will remain in the ON position until interval t has timed out after the control switch is opened.

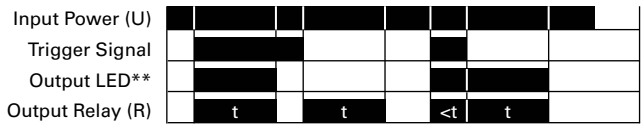

Function #21—TMRP
ON/OFF Delay
Make/Break with Control Switch Trigger

The supply voltage U must be constantly applied to the device. When the control switch S is closed, the set interval t begins. After the interval t has expired, the output relay R switches to the ON position. When the control switch is opened, interval t will begin again. After interval t has timed out, the relay will switch to the OFF position. If supply voltage U is removed at any time, the relay will return to the OFF position.

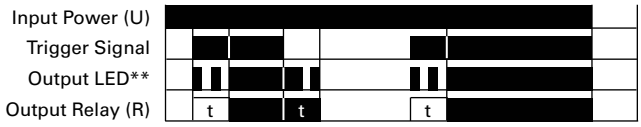

Function #22—TMRP, E5-248
Single Pulse Generator, Voltage Controlled

When the supply voltage U is applied, the set interval t begins. After the interval t has expired, the relay will switch to the ON position for 0.5 seconds before returning to the OFF position. Supply voltage U must be removed and reapplied to repeat the pulse.

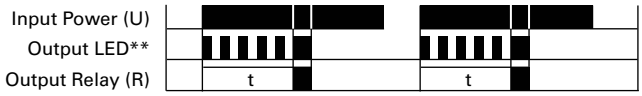

Function #23—N/A
Memory Latch
Control Switch Make

The supply voltage U must be constantly applied to the device. Output changes state with every closure of the control switch S (leading edge).

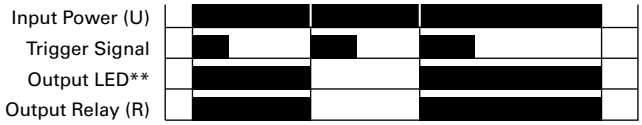

Function #24—TMR6
True OFF Delay

When the supply voltage U is applied, the relay switches to the ON position. When supply power is removed, set time interval t begins. After interval t has expired, the relay switches to the OFF position and will remain there until supply power U is applied again.

Universal TR Series

Contents

Description	*Page*
Universal TR Series	
Product Selection	**V7-T3-173**
Technical Data and Specifications	**V7-T3-173**
Wiring Diagrams	**V7-T3-174**
Dimensions	**V7-T3-175**
TR Series	**V7-T3-176**
TMR5 Series	**V7-T3-179**
TMR6 Series	**V7-T3-183**
TMRP Series	**V7-T3-185**

Universal TR Series

Product Description

Eaton's Universal TR Series timers are our most flexible and cost-effective timing relays available. Products are available with up to seven user-selectable functions and seven user-selectable time ranges. Each unit is DIN rail mountable with a direct connection, eliminating the need for additional sockets. The Universal TR Series timers are available in SPDT and DPDT contact configurations, and have a compact IEC-style footprint and a universal input voltage range for AC and DC applications.

Application Description

A timing relay is a simple form of time-based control, allowing the user to open or close the contacts based on a specified timing function. The Universal TR Series timers are equipped with a set of selector switches, which can easily be set to a specific function and time, thereby reducing the number of product variations required. The universal input voltage (either 12–240 Vac/Vdc or 24–240 Vac/Vdc, depending on the model) further reduces the number of product variations.

The Universal TR Series timers are ideal for high-variability operations, such as systems integrators, distributors, and small equipment manufacturers. The compact design saves panel space, and the low cost and high flexibility of the units reduce inventory requirements.

Features

- Multiple user-selectable timing functions and timing ranges in a single unit reduce product variations and stock keeping units (SKUs)
- Universal input voltages from 12 or 24 to 240 Vac or Vdc eliminate the need to order and stock separate coil voltages
- Compact, DIN rail mountable case reduces panel size
- Advanced LED indication makes troubleshooting easy
- Staggered terminal locations allow access to lower-level terminals after wiring
- SPDT or DPDT contacts with 8 A ratings

Standards and Certifications

- cULus listed
- CE marked
- RoHS compliant
- IEC/EN 61812

c UL us Listed CE RoHS COMPLIANT

Product Selection

Single-Pole Model

Universal TR Timing Relays

Supply Voltage	Description	Catalog Number
4-Function		
24–240 Vac/Vdc	Compact DIN rail mount, SPDT	**TRL04**
7-Function		
24–240 Vac/Vdc	Compact DIN rail mount, SPDT	**TRL07**
12–240 Vac/Vdc	Compact DIN rail mount, DPDT	**TRL27**
	Asymmetrical pulse generator, DPDT	**TRW27**

Technical Data and Specifications

Universal TR Timing Relays

Description	TRL04	TRL07	TRL27	TRW27
Functions ①	E, R, Wu, Bp	E, R, Wu, Bp, Ws, Wa, Es	E, R, Wu, Bp, Ws, Wa, Es	Ii, Ip, ER, Ewu, Ews, WsWa, Wt
Time range	0.05 sec to 100 hours	0.05 sec to 100 hours	0.05 sec to 100 hours	0.05 sec to 100 hours
Input				
Supply voltage	24–240 Vac/Vdc	24–240 Vac/Vdc	12–240 Vac/Vdc	12–240 Vac/Vdc
Rated supply frequency	+10% /–15%	+10% /–15%	±10%	±10%
Rated consumption	4 VA (1.5 W)	4 VA (1.5 W)	6 VA (2 W)	6 VA (2 W)
Duty cycle	100%	100%	100%	100%
Reset time	100 ms	100 ms	100 ms	100 ms
Residual ripple for DC	10%	10%	10%	10%
dropout voltage	>30% of rated supply voltage	>30% of rated supply voltage	>30% of rated supply voltage	>30% of rated supply voltage
Overvoltage category	III (in accordance with IEC 60664-1)	III (in accordance with IEC 60664-1)	III (in accordance with IEC 60664-1)	III (in accordance with IEC 60664-1)
Rated surge voltage	4 kV	4 kV	4 kV	4 kV
Output				
Contact configuration	SPDT (one changeover contact)	SPDT (one changeover contact)	DPDT (two changeover contacts)	DPDT (two changeover contacts)
Rated voltage	250 Vac	250 Vac	250 Vac	250 Vac
Switching capacity	2000 VA (8 A/250 V)	2000 VA (8 A/250 V)	2000 VA (8 A/250 V)	2000 VA (8 A/250 V)
Fusing	8 A fast acting	8 A fast acting	8 A fast acting	8 A fast acting
Mechanical life	20 x 10^6 operations	20 x 10^6 operations	20 x 10^6 operations	20 x 10^6 operations
Electrical life	2 x 10^5 operations at 1000 VA load, resistive	2 x 10^5 operations at 1000 VA load, resistive	2 x 10^5 operations at 1000 VA load, resistive	2 x 10^5 operations at 1000 VA load, resistive
Switching frequency	Max. 6/min. at 1000 VA resistive load (in accordance with IEC 60947-5-1)	Max. 6/min. at 1000 VA resistive load (in accordance with IEC 60947-5-1)	Max. 6/min. at 1000 VA resistive load (in accordance with IEC 60947-5-1)	Max. 6/min. at 1000 VA resistive load (in accordance with IEC 60947-5-1)
Overvoltage category	III (in accordance with IEC 60664-1)	III (in accordance with IEC 60664-1)	III (in accordance with IEC 60664-1)	III (in accordance with IEC 60664-1)
Rated surge voltage	4 kV	4 kV	4 kV	4 kV
Control Signal				
Loadable	Yes	Yes	Yes	Yes
Maximum cable length	10m	10m	10m	10m
Trigger level (sensitivity)	Automatic adaption to supply voltage	Automatic adaption to supply voltage	Automatic adaption to supply voltage	Automatic adaption to supply voltage
Minimum control pulse length	DC 50 ms/AC 100 ms	DC 50 ms/AC 100 ms	DC 50 ms/AC 100 ms	DC 50 ms/AC 100 ms

Note

① Refer to Function Code Cross-Reference Guide on **Page V7-T3-167** for function details.

Universal TR Timing Relays, continued

Description	TRL04	TRL07	TRL27	TRW27
Accuracy				
Base accuracy	±1% of maximum scale value	±1% of maximum scale value	±1% of maximum scale value	±1% of maximum scale value
Adjustment accuracy	<5% of maximum scale value	<5% of maximum scale value	<5% of maximum scale value	<5% of maximum scale value
Repetition accuracy	<0.5% or ±5 ms	<0.5% or ±5 ms	<0.5% or ±5 ms	<0.5% or ±5 ms
Temperature influence	≤0.01% / °C	≤0.01% / °C	≤0.01% / °C	≤0.01% / °C
Physical				
Ambient temperature	–25 to 55 °C	–25 to 55 °C	–25 to 55 °C	–25 to 55 °C
Storage temperature	–25 to 70 °C	–25 to 70 °C	–25 to 70 °C	–25 to 70 °C
Relative humidity	15% to 85% (in accordance with IEC 60721-3-3 Class 3K3)	15% to 85% (in accordance with IEC 60721-3-3 Class 3K3)	15% to 85% (in accordance with IEC 60721-3-3 Class 3K3)	15% to 85% (in accordance with IEC 60721-3-3 Class 3K3)
Pollution degree	2, if built in 3 (in accordance with IEC 60664-1)	2, if built in 3 (in accordance with IEC 60664-1)	2, if built in 3 (in accordance with IEC 60664-1)	2, if built in 3 (in accordance with IEC 60664-1)
Housing material	Self-extinguishing plastic housing, IP40 rating	Self-extinguishing plastic housing, IP40 rating	Self-extinguishing plastic housing, IP40 rating	Self-extinguishing plastic housing, IP40 rating
Mounting	Mounted on DIN rail TS 35 according to EN 60715, any position	Mounted on DIN rail TS 35 according to EN 60715, any position	Mounted on DIN rail TS 35 according to EN 60715, any position	Mounted on DIN rail TS 35 according to EN 60715, any position
Terminal rating	Shockproof terminal connection according to VBG 4 (PZ1 required), IP20 rating	Shockproof terminal connection according to VBG 4 (PZ1 required), IP20 rating	Shockproof terminal connection according to VBG 4 (PZ1 required), IP20 rating	Shockproof terminal connection according to VBG 4 (PZ1 required), IP20 rating
Tightening torque	Max. 1 Nm	Max. 1 Nm	Max. 1 Nm	Max. 1 Nm

Terminal Capacity

Description
1 x 0.5 to 2.5 mm^2 with/without multicore cable end
1 x 4 mm^2 without multicore cable end
2 x 0.5 to 1.5 mm^2 with/without multicore cable end
2 x 2.5 mm^2 flexible without multicore cable end

Wiring Diagrams

Single-Pole, Double-Throw Units (SPDT)—TRL04 and TRL07

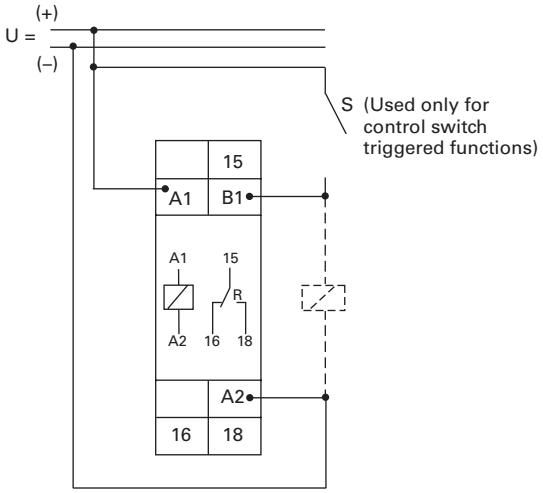

Double-Pole, Double-Throw Units (DPDT)—TRL27 and TRW27

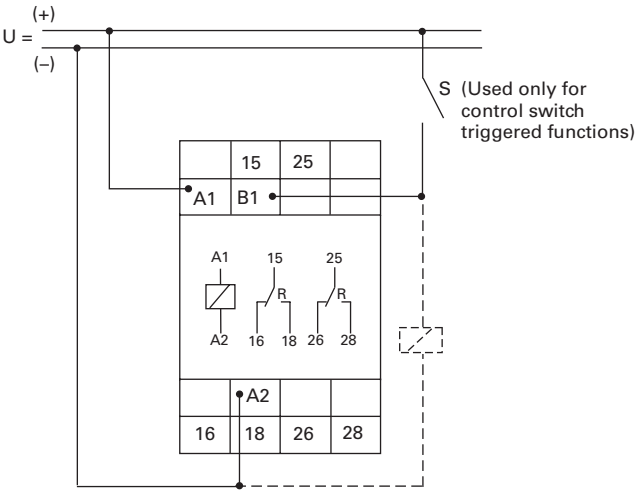

Dimensions

Approximate Dimensions in Inches (mm)

17.5 mm (TRL04 and TRL07)

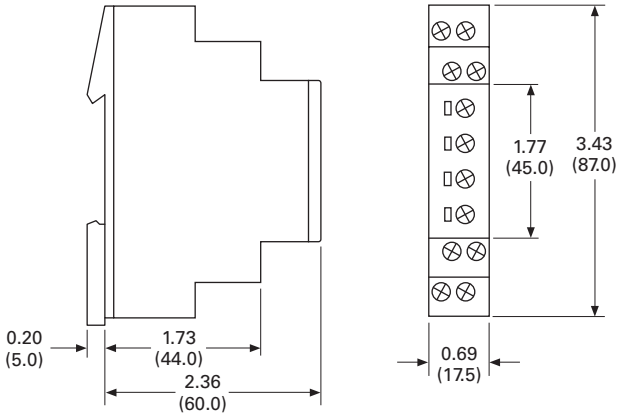

35 mm (TRL27 and TRW27)

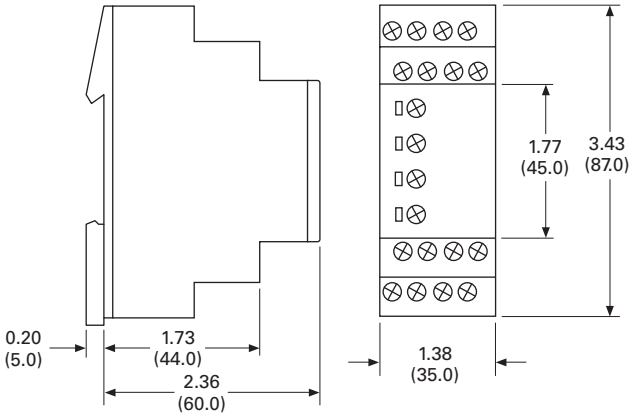

3

TR Series

Contents

Description	*Page*
Universal TR Series	**V7-T3-172**
TR Series	
Catalog Number Selection	**V7-T3-177**
Product Selection	**V7-T3-177**
Accessories	**V7-T3-177**
Technical Data and Specifications	**V7-T3-178**
Dimensions	**V7-T3-178**
TMR5 Series	**V7-T3-179**
TMR6 Series	**V7-T3-183**
TMRP Series	**V7-T3-185**

TR Series

Product Description

The upgraded TR Series Timing Relays are designed to meet most timing requirements by offering more flexibility in range of input voltage, timing range and functionality. Use a rotary switch to choose from 20 selectable time ranges from 0.1 second to 600 hours. We offer both a power triggered and signal triggered model—each with expanded operation modes. There is a green LED to indicate when power is ON and an orange LED when output is ON.

Features

- 20 time ranges and 10 timing functions
- Time delays from 0.1 sec to 600 hrs
- Space-saving, compact package
- High repeat accuracy of ± 0.2%
- LED indication
- Standard 8- or 11-pin and 11-blade termination
- 2 Form C DPDT delayed output contacts
- 10 A contact rating

Operation

TRNP and TRNB

Internal Connections

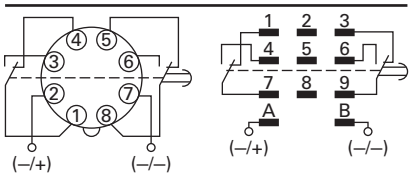

TRNP TRNB

TRFP and TRFB

Internal Connections

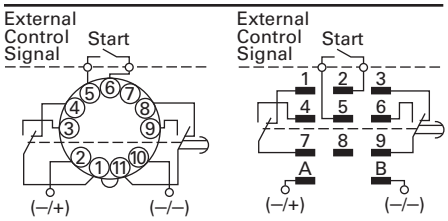

TRFP TRFB

Standards and Certifications

- cULus listed
- CSA
- CE marked
- TUV

Catalog Number Selection

TR N P 240 AC

Family Type
TR

Operational Mode

N = **Power Triggered**	**F** = **Signal Triggered**
A = ON delay B = Interval C = Flasher (pause first) D = Flasher (ON first)	A = ON delay, control signal start (leading edge OFF) B = Flasher, control signal start (pause first) C = Flasher, control signal Start (ON first) D = Signal ON/OFF delay E = OFF delay F = Single shot leading edge with control input

Model Type
P = Pin/octal
B = Blade style

Input Voltage
24AD = 24 Vac (50/60 Hz)/24 Vdc
240AC = 100–240 Vac (50/60 Hz)

Product Selection

TR Plug-In Timing Relays—Power Triggered

Coil Voltage	Octal Catalog Number	Blade Catalog Number
24 Vac/Vdc	**TRNP24AD**	**TRNB24AD**
100–240 Vac	**TRNP240AC**	**TRNB240AC**

TR Plug-In Timing Relays—Signal Triggered

Coil Voltage	Octal Catalog Number	Blade Catalog Number
24 Vac/Vdc	**TRFP24AD**	**TRFB24AD**
100–240 Vac	**TRFP240AC**	**TRFB240AC**

Accessories

Sockets for Use with TR Timers—Standard Pack of 10

Timing Relay	Terminal Style	Catalog Number
TRNP	8-pin octal	**D3PA2**
TRFP	11-pin octal	**D3PA3**
TRNB, TRFB	0.187 in solder/QC terminals (blade style)	**D5PA2**

Technical Data and Specifications

General

Description	Specification
Operation system	Solid-state CMOS circuit
Time range	0.1 sec to 600 hours
Pollution degree	2 (IE60664-1)
Overvoltage category	III (IE60664-1)
Rated operational voltage	
240 AC	100–240 Vac (50/60 Hz)
24 AC	24 Vac (50/60 Hz)/24 Vdc
12 DC	12 Vdc
Voltage tolerance	
240 AC	85–264 Vac (50/60 Hz)
24 AC	20.4–26.4 Vac (50/60 Hz)/21.6–26.4 Vdc
12 DC	10.8–13.2 Vdc
Input OFF voltage	Rated voltage x 10% minimum
Ambient operating temperature	–4 to 149 °F (–20 to 65 °C)
Reset time	100 ms maximum
Repeat error	± 0.2%, ± 20 ms ①
Voltage error	± 0.2%, ± 20 ms ①
Temperature error	± 0.5%, ± 20 ms ①
Setting error	± 10% maximum
Insulation resistance	100M ohm minimum (500 Vdc)
Dielectric strength	
Between power and output terminals	2000 Vac, 1 minute
Between contacts of different poles	2000 Vac, 1 minute
Between contacts of same pole	1000 Vac, 1 minute
Vibration resistance	10–55 Hz amplitude 0.5 mm; 2 hrs in each of 3 axes
Shock resistance	
Operating extremes	10G
Damage limits —	
TRNP, TRFP	40G (3x in each of 3 axes)
TRNB, TRFB	10G (3x in each of 3 axes)
Power consumption (approx.)	
240 AC	6.5 VA TRNP, TRNB/6.6 VA TRFP, TRFB
240 Vac/60 Hz	11.6 VA TRNP, TRNB/12.1 VA TRFP, TRFB
24 AC (AC/DC)	3.4 VA–1.7 W TRNP, TRNB/3.5 VA–1.7 W TRFP, TRFB
12 DC	1.6 W

TR Series Contact Ratings

Description	Specification
Contact configuration	2 Form C, DPDT (delayed output)
Allowable voltage/current	240 Vac, 30 Vdc/10 A
Max. permissible operating frequency	1800 cycles per hour
Rated load	
Resistive	10 A, 240 Vac/30 Vdc
Inductive	7 A, 240 Vac/30 Vdc
Horsepower rating	1/6 hp 120 Vac, 1/3 hp 240 Vac
Life	
Electrical	500,000 operations minimum (resistive)
Mechanical	50,000,000 operations minimum

Dimensions

Approximate Dimensions in Inches (mm)

TR Series Dimensions and Weights

Description	Specification
Dimensions	
TRNP, TRFP	1.58H x 1.42W x 3.07D in. (40H x 36W x 77.9D mm)
TRNB, TRFB	1.58H x 1.42W x 2.95D in. (40H x 36W x 74.9D mm)
Weights	
TRNP	87g
TRFP	89g
TRNB, TRFB	85g

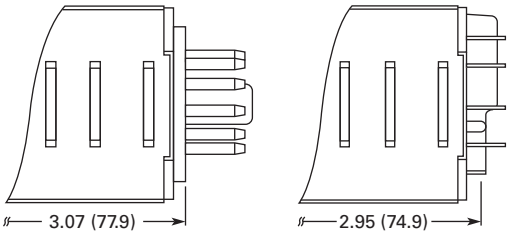

Pin (P) Type **Blade (B) Type**

Note

① For the value of the error against a preset time, whichever value is larger should apply.

TMR5 Series

Contents

Description	*Page*
Universal TR Series	**V7-T3-172**
TR Series	**V7-T3-176**
TMR5 Series	
Catalog Number Selection	**V7-T3-180**
Product Selection	**V7-T3-180**
Accessories	**V7-T3-180**
Technical Data and Specifications	**V7-T3-181**
Wiring Diagrams	**V7-T3-181**
Dimensions	**V7-T3-182**
TMR6 Series	**V7-T3-183**
TMRP Series	**V7-T3-185**

TMR5 Series

Product Description

The TMR5 Series Time Delay Relays are designed for a broad range of OEM applications. The TMR5 Series offers non-programmable plug-in style timers with a variety of functions available. Each unit offers a single function and single input voltage, and operates over a defined time delay range. Units with fixed time delays are also available. Eaton also offers customization capabilities for these timers—remote adjustments, special pin configurations, and more. Contact us to discuss your specific application and design of a custom timer.

Features

- Single timing range for each unit
- Ranges available from 0.02 sec to 24 hours
- Wide variety of functions available
- Plugs into standard 8- or 11-pin socket
- 10 A DPDT output contacts
- Can be easily customized to meet your needs

Standards and Certifications

- cRUus
- UL listed (with Eaton socket)
- RoHS compliant
- CE marked

with Eaton socket

Catalog Number Selection

All configurations from Catalog Number Selection are available.

TMR5 N 05 120

Family Type
TMR5

Operational Mode	
8-Pin Octal Sockets	**11-Pin Octal Sockets**
N = ON delay **T** = Interval ON **L** = Flasher-pause-first **R** = Repeat cycle ① (OFF time first followed by ON time and repeating) **Y** = Repeat cycle ① (ON time first followed by OFF time and repeating)	**F** = OFF delay, control switch trigger **C** = Single shot, control switch trigger **W** = Watchdog, control switch trigger (retriggerable single shot) **P** = OFF delay, power trigger **G** = Single shot, power trigger **D** = Watchdog, power trigger (retriggerable single shot)

Timing Range ②
04 = 0.05–5 sec **05** = 0.1–10 sec **08** = 0.6–60 sec **12** = 3–300 sec **15** = 0.3–30 min **16** = 0.6–60 min **22** = 6 sec–10 min

Input Voltage
120 = 120 Vac/Vdc **24** = 24 Vac/Vdc **12** = 12 Vac/Vdc **240** = 240 Vac/Vdc

Product Selection

TMR5 Time Delay Relays

Input Voltage	Socket	Timing Range	Catalog Number
ON Delay			
120 Vac/Vdc	8-pin	0.1–10 sec	**TMR5N05120**
		0.6–60 sec	**TMR5N08120**
24 Vac/Vdc		0.1–10 sec	**TMR5N0524**
		0.6–60 sec	**TMR5N0824**
OFF Delay, Control Switch Trigger			
120 Vac/Vdc	11-pin	0.1–10 sec	**TMR5F05120**
		0.6–60 sec	**TMR5F08120**
24 Vac/Vdc		0.1–10 sec	**TMR5F0524**
		0.6–60 sec	**TMR5F0824**
Interval ON			
120 Vac/Vdc	8-pin	0.1–10 sec	**TMR5T05120**
		0.6–60 sec	**TMR5T08120**
24 Vac/Vdc		0.1–10 sec	**TMR5T0524**
		0.6–60 sec	**TMR5T0824**
Single Shot, Control Switch Trigger			
120 Vac/Vdc	11-pin	0.1–10 sec	**TMR5C05120**
		0.6–60 sec	**TMR5C08120**
24 Vac/Vdc		0.1–10 sec	**TMR5C0524**
		0.6–60 sec	**TMR5C0824**
Repeat Cycle (OFF Time First Followed by ON Time and Repeating)			
120 Vac/Vdc	8-pin	0.1–10 sec	**TMR5R05120**
		0.6–60 sec	**TMR5R08120**
24 Vac/Vdc		0.1–10 sec	**TMR5R0524**
		0.6–60 sec	**TMR5R0824**
Repeat Cycle (ON Time First Followed by OFF Time and Repeating)			
120 Vac/Vdc	8-pin	0.1–10 sec	**TMR5Y05120**
		0.6–60 sec	**TMR5Y08120**
24 Vac/Vdc		0.1–10 sec	**TMR5Y0524**
		0.6–60 sec	**TMR5Y0824**

Accessories

Accessories for Use with TMR5 Time Delay Relays

Description	Standard Pack	Catalog Number
8-pin socket	10	**D3PA2**
11-pin socket	10	**D3PA3-A2**
Hold-down spring	10	**D65CHDS**

Notes

① Indicates DUAL knob unit. All dual knob units can have independently selectable and adjustable ON and OFF times. If different ON and OFF times are desired, add two codes for time ranges in the part number. The first code listed indicates the first timing range of the unit (OFF time for R, ON time for Y) and the second code indicates the second timing range (ON time for R, OFF Time for Y).

② Fixed time delay settings are available for orders of 50 pieces or more. Contact EatonCare for additional information at 877-ETN-CARE (386-2273).

Technical Data and Specifications

TMR5 Time Delay Relays

Description	Specification
Voltage tolerance	
AC operation	+10/–15% of nominal at 50/60 Hz
DC operation	+10/–15% of nominal
Load burden	2 VA
Setting accuracy	
Maximum setting (adjustable)	+5%, –0%
Minimum setting (adjustable)	+0%, –50%
Fixed time delay	
< 2 seconds	+1%
0.1–2 seconds	±5%
Repeat accuracy (constant voltage and temperature)	
> 2 seconds delay	±0.1%
0.1–2 seconds delay	±2%
Reset time	
ON Delay/interval/repeat cycle	0.1 second
OFF Delay/single shot/watchdog	0.04 second
Startup time (time from when power is applied until unit is timing)	
120 and 240 V units	0.05 second
12, 24 and 48 V units	0.08 second
Maintain function time (time unit continues to time after power is removed)	0.01 second
Temperature	
12–120 V input voltage	–18 to 150 °F (–28 to 65 °C)
240 V input voltage	–18 to 122 °F (–28 to 50 °C)
Insulation voltage	2000 V
Output contacts	DPDT 10 A @ 240 Vac/30 Vdc, 1/2 hp @ 120/240 Vac (NO contacts) 1/3 hp @ 120/240 Vac (NC contacts) B300 and R300; AC-15 and DC-13
Life	
Mechanical	10,000,000 operations
Full load	100,000 operations

Wiring Diagrams

Wiring for 8-Pin Units

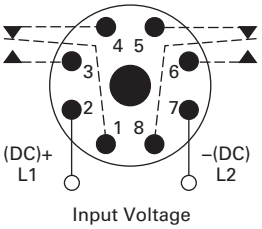

Wiring for 11-Pin Control Switch Trigger Units

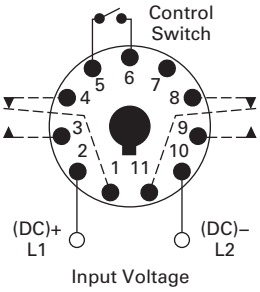

Wiring for 11-Pin Power Trigger Units

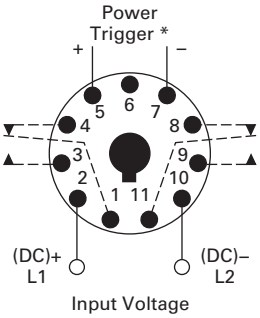

* Should Be Same Voltage as Input Voltage

Dimensions

Approximate Dimensions in Inches (mm)

TMR5

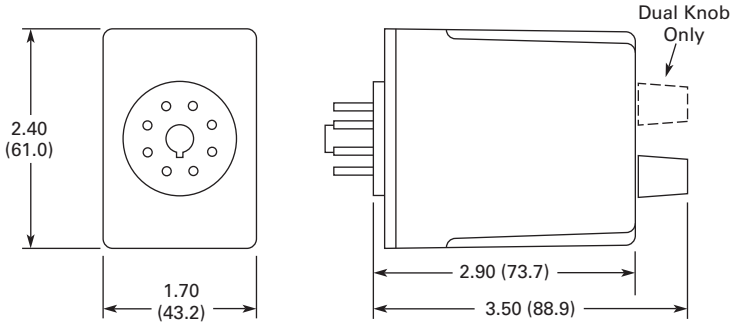

D3PA2 Socket

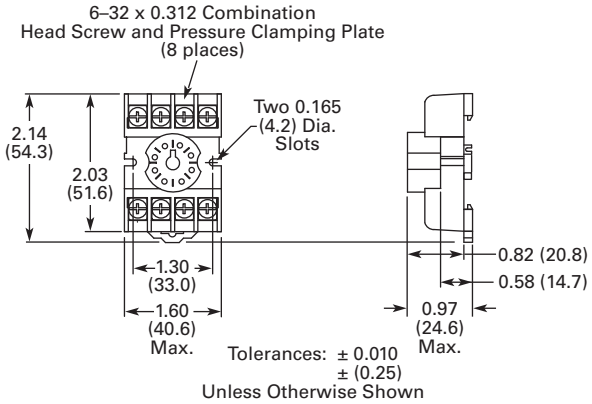

D3PA3 Socket

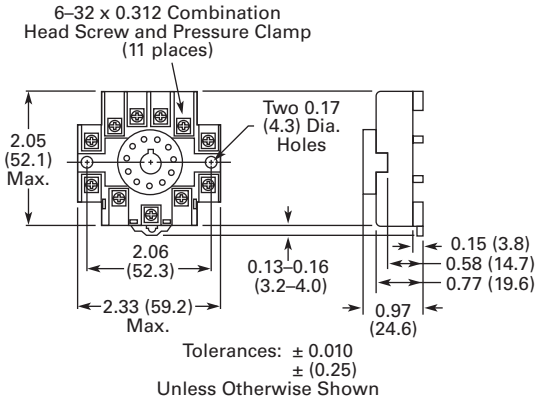

TMR6 Series

Contents

Description	*Page*
Universal TR Series	**V7-T3-172**
TR Series	**V7-T3-176**
TMR5 Series	**V7-T3-179**
TMR6 Series	
Catalog Number Selection	**V7-T3-184**
Product Selection	**V7-T3-184**
Accessories	**V7-T3-184**
Technical Data and Specifications	**V7-T3-184**
Wiring Diagram	**V7-T3-184**
Dimensions	**V7-T3-184**
TMRP Series	**V7-T3-185**

TMR6 Series

Product Description

Most electronic time delay relays with an OFF delay function require input voltage to be applied continuously in order to operate correctly. However, there are many applications where this is not possible—keeping a relay energized for some amount of time after input voltage has been removed. Eaton's TMR6 true OFF delay product provides this function even when input voltage is removed. It duplicates the operation of the older OFF delay pneumatic time delay relays.

Features

- Provides OFF delay function without requiring input voltage during OFF time delay
- Duplicates operation of pneumatic OFF delay timers
- Each unit has eight timing ranges built in, covering 0.05 seconds to 30 minutes
- Selecting a range is easy using a rotary switch (no math is required or DIP switches to set)
- Uses industry-standard 8-pin octal socket
- 10 A DPDT output contacts

Timing Ranges

Select one of the eight timing ranges using the selector knob, and then adjust the time within that range for an accurate delay setting.

Timing Ranges

Dial Setting	Timing Range
A	0.05–5 sec.
B	0.1–10 sec.
C	0.3–30 sec.
D	0.6–60 sec.
E	1.8–180 sec.
F	3–300 sec.
G	0.1–10 min.
H	0.3–30 min

Operation

True OFF Delay

Upon application of input voltage, the relay is energized. When the input voltage is removed, the preset time begins. At the end of the preset time, the relay is de-energized.

Voltage must be applied for a minimum of 0.1 second to assure proper operation. Any application of the input voltage during the preset time will keep the relay energized and reset the time delay. No external trigger switch is required.

True OFF Delay

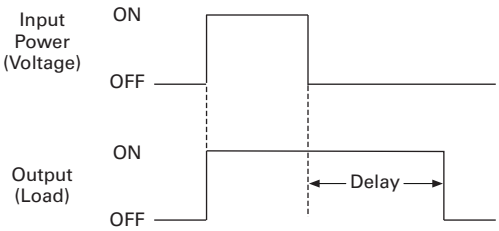

Standards and Certifications

- cRUus
- UL listed (with Eaton socket)
- RoHS compliant
- CE marked

with Eaton socket

Catalog Number Selection

All configurations from Catalog Number Selection are available.

TMR6 X 00 120

Family Type
TMR6

Operational Mode
X = True OFF delay

Timing Range
00 = Programmable

Input Voltage
120 = 120 Vac/Vdc
24 = 24 Vac/Vdc
240 = 240 Vac/Vdc

Wiring Diagram

Wiring for 8-Pin Units

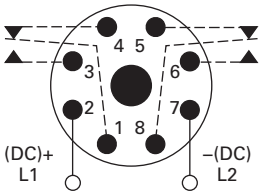

Input Voltage

Product Selection

TMR6 True OFF Delay Relays

Input Voltage	Timing Range	Catalog Number
True OFF Delay		
120 Vac/Vdc	0.05 sec–30 min (user selectable, 8 ranges)	**TMR6X00120**
24 Vac/Vdc		**TMR6X0024**
240 Vac/Vdc		**TMR6X00240**

Accessories

Accessories for Use with TMR6 Time Delay Relays

Description	Standard Pack	Catalog Number
8-pin socket	10	**D3PA2**
Hold-down spring	10	**D65CHDS**

Technical Data and Specifications

TMR6 Time Delay Relays

Description	Specification
Voltage tolerance	
AC operation	+10/–15% of nominal at 50/60 Hz
DC operation	+10/–15% of nominal
Load burden	2 VA
Setting accuracy	
Maximum setting (adjustable)	+5%, –0%
Minimum setting (adjustable)	+0%, –50%
Repeat accuracy (constant voltage and temperature)	±0.1% or 50 ms, whichever is greater
Temperature	–18 to 150 °F (–28 to 65 °C)
Insulation voltage	2,000 V
Output contacts	DPDT 10 A @ 240 Vac/30 Vdc, 1/2 hp @ 120/240 Vac (NO contacts) 1/3 hp @ 120/240 Vac (NC contacts) B300 and R300; AC-15 and DC-13
Life	
Mechanical	2,000,000 operations
Full load	100,000 operations

Dimensions

Approximate Dimensions in Inches (mm)

TMR6

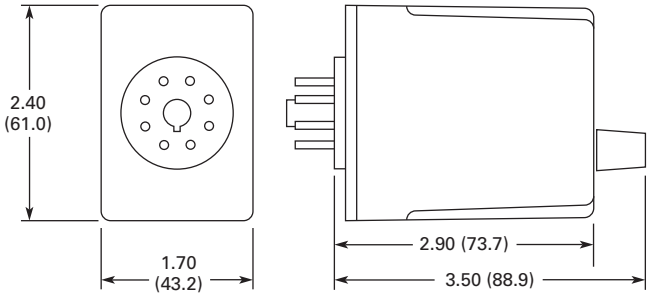

D3PA2 Socket

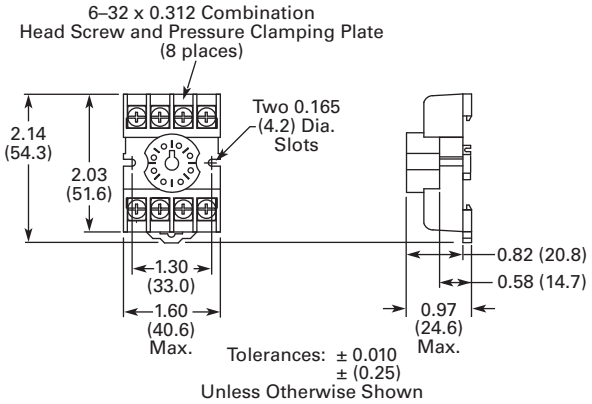

TMRP Series

Contents

Description	Page
Universal TR Series	V7-T3-172
TR Series	V7-T3-176
TMR5 Series	V7-T3-179
TMR6 Series	V7-T3-183
TMRP Series	
Product Selection	V7-T3-186
Technical Data and Specifications	V7-T3-186
Wiring Diagrams	V7-T3-187
Dimensions	V7-T3-187

TMRP Series

Product Description

Eaton's TMRP Series timers combine flexibility with ease of use and installation to make the most versatile timer in our offering. The thumb-wheel setting design allows for quick selection and review of up to 10 timing functions and seven timing ranges. The TMRP units can be mounted in a 1/16 DIN cutout or on a DIN rail with our D3 series sockets. Input voltage is 12–240 Vac/Vdc to work with all popular control voltages.

Application Description

A timing relay is a simple form of time-based control, allowing the user to open or close the contacts based on a specified timing function. The TMRP series is equipped with a set of thumb-wheel style selector switches, which can easily be set to a specific function and time, thereby reducing the number of product variations required. The universal input voltage of 12–240 Vac/Vdc further reduces the number of product variations.

The TMRP timers are ideal for high-variability operations, such as systems integrators, distributors, and small equipment manufacturers. The flexible enclosure design allows for back-panel mounting, through-panel mounting, or DIN rail mounting.

Features

- Multiple user-selectable timing functions and timing ranges in a single unit reduce product variations and stock keeping units (SKUs)
- Universal input voltages from 12–240 Vac/Vdc eliminate the need to order and stock separate coil voltages
- Timing ranges up to 9990 hours
- Dual LED indication makes troubleshooting easy
- Flexible design for back-panel, through-panel (45 mm x 45 mm cutout), or DIN rail mounting
- SPDT or DPDT contacts with 12 A ratings
- Plastic dust cover keeps out contaminants and eliminates accidental set point changes
- Use with standard Eaton D3 sockets—see Technical Data and Specifications

LED Indicator

LED Description	Function
Solid green "Input"	Supply voltage present
Solid red "Output"	Relay energized
Slowly flashing red "Output"	Timing cycle activated, relay not energized
Rapidly flashing red "Output"	Timing cycle activated, relay energized

Standards and Certifications

- UL recognized
- CE marked
- RoHS compliant

Product Selection

TMRP5100

TMRP Timing Relays

Supply Voltage	Description	Catalog Number
10-Function		
12–240 Vac/Vdc	Control switch trigger, DPDT	**TMRP5100**
	Control switch trigger, SPDT	**TMRP5101**
	Power trigger, DPDT	**TMRP5102**

Technical Data and Specifications

TMRP Timing Relays

Description	TMRP5100	TMRP5101	TMRP5102
Functions ①	A, B, C, D, E, F, G, H, I, J	A, B, C, D, E, F, G, H, I, J	A, B, C
Time range	0.1 sec to 9,990 hours	0.1 sec to 9,990 hours	0.1 sec to 9,990 hours
Input			
Supply voltage	12–240 Vac/Vdc	12–240 Vac/Vdc	12–240 Vac/Vdc
Supply voltage tolerance	±15%	±15%	±15%
Rated consumption	2.5 VA (2 W) maximum	2.5 VA (2 W) maximum	2.5 VA (2 W) maximum
Reset time	150 ms	150 ms	150 ms
Reverse polarity protection	Yes	Yes	Yes
Operate time	25 ms maximum	25 ms maximum	25 ms maximum
Release time	25 ms maximum	25 ms maximum	25 ms maximum
Rated surge voltage	4 kV	4 kV	4 kV
Output			
Contact configuration	DPDT	SPDT	DPDT
Contact rating (AC)	12 A resistive at 120, 240 UL 508	12 A resistive at 120, 240 UL 508	12 A resistive at 120, 240 UL 508
Contact rating (DC)	12 A resistive at 30 UL 508	12 A resistive at 30 UL 508	12 A resistive at 30 UL 508
Contact rating horsepower	1/2 at 120 Vac, 1 at 240 Vac	1/2 at 120 Vac, 1 at 240 Vac	1/2 at 120 Vac, 1 at 240 Vac
Contact rating pilot duty	A300, 720 VA at 240 Vac	A300, 720 VA at 240 Vac	A300, 720 VA at 240 Vac
Minimum load	12 V/100 mA	12 V/100 mA	12 V/100 mA
Contact material	Silver-nickel 90/10	Silver-nickel 90/10	Silver-nickel 90/10
Contact resistance	100 milliohms max. at 1 A 12 Vdc	100 milliohms max. at 1 A 12 Vdc	100 milliohms max. at 1 A 12 Vdc
Mechanical life—full load	10 million operations	10 million operations	10 million operations
Electrical life—full load	100,000 operations	100,000 operations	100,000 operations
Control Signal			
Minimum control pulse length	50 ms minimum	50 ms minimum	50 ms minimum
Accuracy			
Repetition accuracy	0.10% at constant voltage and temperature	0.10% at constant voltage and temperature	0.10% at constant voltage and temperature
Physical			
Ambient temperature	–10 to 55 °C	–10 to 55 °C	–10 to 55 °C
Storage temperature	–40 to 85 °C	–40 to 85 °C	–40 to 85 °C
Mounting	Use with D3PA3 socket	Use with D3PA2 socket	Use with D3PA2 socket

Note

① Refer to Function Code Cross-Reference Guide on **Page V7-T3-167** for function details.

Wiring Diagrams

TMRP5100

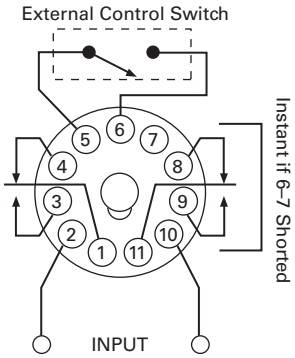

TMRP5101

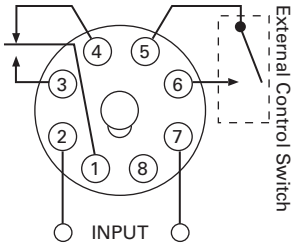

TMRP5102

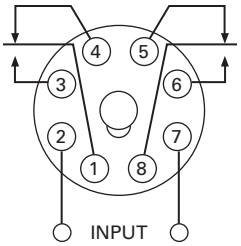

Dimensions

Approximate Dimensions in Inches (mm)

TMRP Series

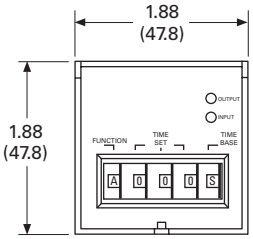

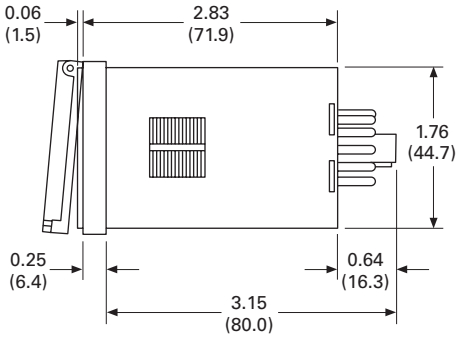

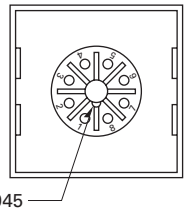

8-Pin Octal Base

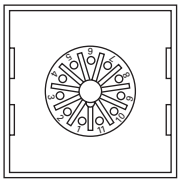

11-Pin Octal Base

D85 Series—Alternating Relays

Contents

Description	*Page*
D85 Series—Alternating Relays	
Product Selection	**V7-T3-189**
Accessories	**V7-T3-189**
Technical Data and Specifications	**V7-T3-190**
Wiring Diagrams	**V7-T3-190**
Dimensions	**V7-T3-192**

Product Description

Alternating relays are used in applications where the optimization of load usage is required by equalizing the run time of two loads. They are also used where additional capacity is required in case of excess load requirements. This alternating action is initiated by a control switch—such as a float switch, manual switch, timing relay, pressure switch or other isolated contact. Each time the initiating switch is opened, the output relay contacts will change state, thus alternating the two loads. Two LED indicators show the status of the output relay.

The D851 and D852 Series Relays are used with one control switch and are available in either SPDT or DPDT output configurations with or without a selector switch to lock in one sequence. The D852X Series Relays are available in DPDT cross-wired output configurations for use with one or two control switches (LEAD and LAG).

The D853 Series is designed for use with three-switch applications (LEAD, LAG and STOP). The D853 Series combines a standard DPDT Cross-Wired alternating relay, contactor auxiliary contacts, and a control relay into one compact and economical product. This saves space and labor, while reducing the number of components needed. The D853 Series uses Sequence On–Simultaneous Off (S.O.S.O.) operation, where the two loads are energized sequentially, but remain on together until the STOP switch is opened. This device also protects against failure of the STOP and LEAD switches. If both switches fail, the two pump motors will be energized simultaneously when the LAG switch is closed.

Each of the D85 Series alternating relays is available with an optional three-position selector switch, which allows the unit to alternate the two loads as normal, or lock the relay to one load or the other. By locking the alternating relay to one load, the other load can be removed for service without rewiring the first load for continuous operation. The selector switch has a low profile to prevent any accidental actuation.

Features

- For duplex loads
- Works with one-, two-, or three-switch applications
- Compact plug-in design using industry standard sockets
- 10 A SPDT or DPDT output configurations
- Optional low profile selector switch to lock in one sequence
- Two LEDs indicate relay status
- D853 Series replaces separate components in duplex panel—saving space and reducing labor

Standards and Certifications

- CE
- cRUus
- UL listed ①
- RoHS compliant

Listed

Note

① When used with appropriate Eaton socket.

Product Selection

D85 Series—Alternating Relays ①

Output Contacts	Control Voltage	Socket	Catalog Number
SPDT	12 Vac	8-pin	**D851NR**
SPDT	24 Vac	8-pin	**D851NT**
SPDT	120 Vac	8-pin	**D851NA**
SPDT	240 Vac	8-pin	**D851NB**
SPDT w/selector switch	12 Vac	8-pin	**D851LR**
SPDT w/selector switch	24 Vac	8-pin	**D851LT**
SPDT w/selector switch	120 Vac	8-pin	**D851LA**
SPDT w/selector switch	240 Vac	8-pin	**D851LB**
DPDT	12 Vac	11-pin	**D852NR**
DPDT	24 Vac	11-pin	**D852NT**
DPDT	120 Vac	11-pin	**D852NA**
DPDT	240 Vac	11-pin	**D852NB**
DPDT w/selector switch	12 Vac	11-pin	**D852LR**
DPDT w/selector switch	24 Vac	11-pin	**D852LT**
DPDT w/selector switch	120 Vac	11-pin	**D852LA**
DPDT w/selector switch	240 Vac	11-pin	**D852LB**
DPDT cross-wired	12 Vac	8-pin	**D852XNR**
DPDT cross-wired	24 Vac	8-pin	**D852XNT**
DPDT cross-wired	120 Vac	8-pin	**D852XNA**
DPDT cross-wired	240 Vac	8-pin	**D852XNB**
DPDT cross-wired w/selector switch	12 Vac	8-pin	**D852XLR**
DPDT cross-wired w/selector switch	24 Vac	8-pin	**D852XLT**
DPDT cross-wired w/selector switch	120 Vac	8-pin	**D852XLA**
DPDT cross-wired w/selector switch	240 Vac	8-pin	**D852XLB**

Accessories

D85 Series—Alternating Relays

Description	Standard Pack	Catalog Number
8-pin socket	10	**D3PA2**
11-pin socket	10	**D3PA3-A2**
Hold-down spring	10	**D65CHDS**

Note

① Contact Eaton for relays for 3-switch applications (Lead-Lag-Stop).

Technical Data and Specifications

D85 Series—Alternating Relays

Description	Specification
Voltage tolerance	+10%/-15% of control voltage at 50/60 Hz
Load (burden)	Less than 3 VA
Output contacts	10 A resistive at 240 Vac / 30 Vdc, 1/2 hp at 120/240 Vac (NO), 1/3 hp at 120/240 Vac (NC)
Mechanical life	10,000,000 operations
Electrical life	100,000 operations
Temperature	–20 °F to +150 °F (–28 ° to 65 °C)
Transient protection	10,000 volts for 20 microseconds
Indicator LEDs	2 LEDs marked LOAD A and LOAD B
Optional selector switch settings	ALTERNATE, LOCK LOAD A, LOCK LOAD B

Wiring Diagrams

D851 Series Relays, SPDT

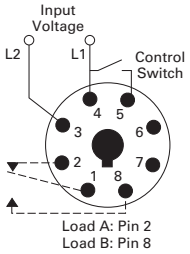

D852 Series Relays, DPDT

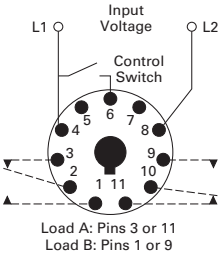

D852X Series Relays, DPDT Cross-Wired

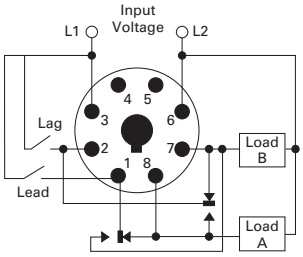

D853 Series Relays, Three-Switch Applications

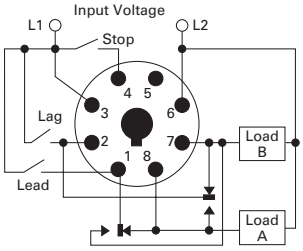

Typical Installations for SPDT and DPDT Alternating Relays, Standard Installation

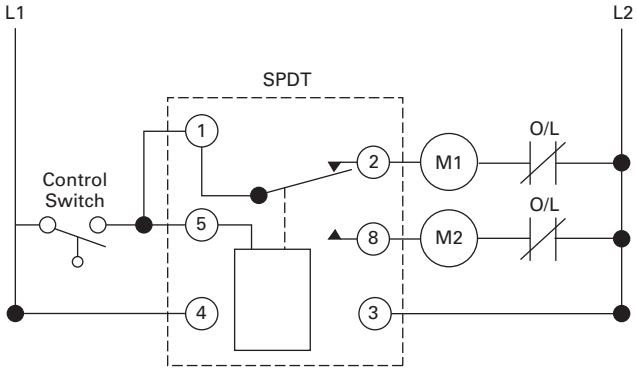

Typical Installations for SPDT and DPDT Alternating Relays, Anti-Bounce Installation

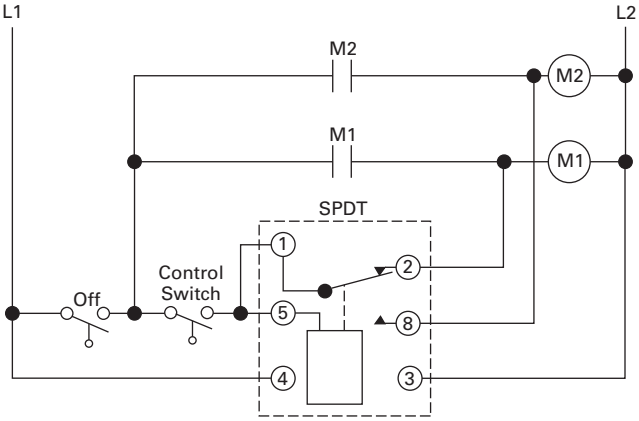

In the OFF state (standard installation), the control switch is open, the alternating relay is in the LOAD A position, and both loads (M1 and M2) are off. When the control switch closes, it energizes the first load (M1). The red LED marked "LOAD A" glows. As long as the control switch remains closed, M1 remains energized.

When the control switch opens, the first load (M1) is turned off and the alternating relay toggles to the LOAD B position. When the control switch closes again, it energizes the second load (M2). The red LED marked "LOAD B" glows.

When the control switch opens, the second load (M2) is turned off, the alternating relay toggles back to the LOAD A position, and the process can be repeated again. On relays with DPDT contacts, two pilot lights can be used for remote indication of LOAD A or LOAD B status.

To eliminate any bounce condition of the control switch, the addition of a second switch (OFF) along with two auxiliary contacts is recommended as shown in the Anti-Bounce Installation.

Typical Installations for DPDT Cross-Wired Alternating Relays, Standard Installation

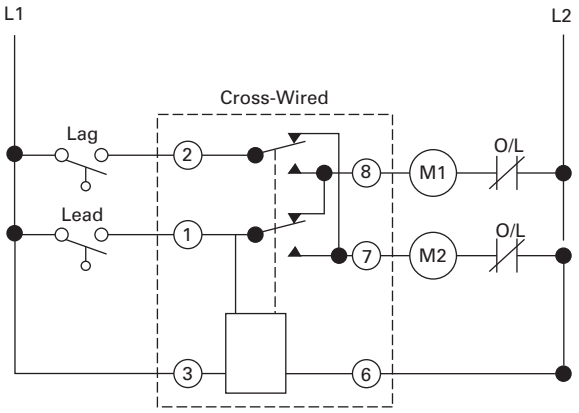

In the OFF state, both the LEAD control switch and the LAG control switch are open, the alternating relay is in the LOAD A position, and both loads are off. When the LEAD control switch closes, it energizes the first load (M1). The red LED marked "LOAD A" glows. As long as the LEAD control switch remains closed, M1 remains energized. If the LAG control switch closes, it energizes the second load (M2).

When the LAG control switch opens, the second load (M2) is turned off. When the LEAD control switch opens, the first load (M1) is turned off and the alternating relay toggles to the LOAD B position.

Typical Installations for DPDT Cross-Wired Alternating Relays, Anti-Bounce Installation

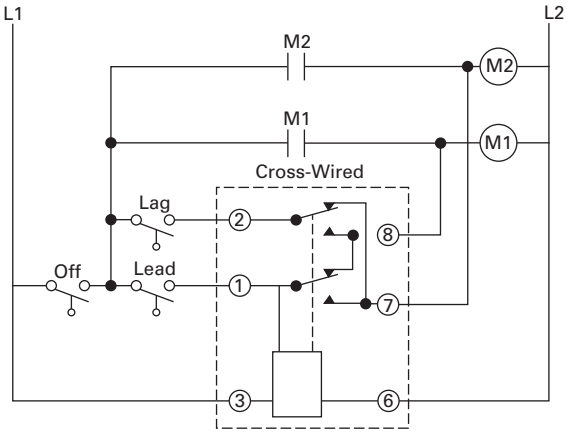

When the LEAD control switch closes, it turns on the second load (M2). The red LED marked "LOAD B" glows. If the LAG control switch closes, it will energize the first load (M1). When the LAG control switch opens, the first load (M1) is turned off. When the LEAD control switch opens, the second load (M2) is turned off, the alternating relay toggles back to the LOAD A position, and the process can be repeated again.

To eliminate any bounce condition of the control switch, the addition of a second switch (OFF) along with two auxiliary contacts is recommended as shown in the Anti-Bounce Installation.

Typical Installations for DPDT Cross-Wired Relays for Three-Switch Applications

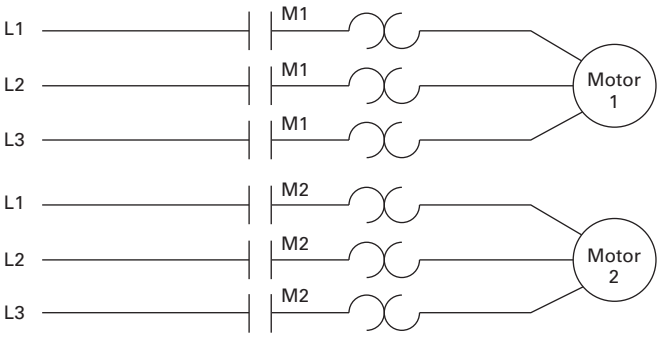

In the OFF state, all three switches are open, the alternating relay is in the LOAD A position, and both loads are off. No action happens with the alternating relay or either load when the STOP switch closes. When the LEAD switch closes, Load #1 (M1) turns on. When the LAG switch closes, Load #2 (M2) turns on. Both loads remain on as long as all three switches are closed.

When the LAG switch opens, Load #2 (M2) remains on because the STOP switch is still closed. When the LEAD switch opens, Load #1 (M1) remains on because the STOP switch is still closed. When the STOP switch opens, both Load #1 (M1) and Load #2 (M2) are turned off simultaneously.

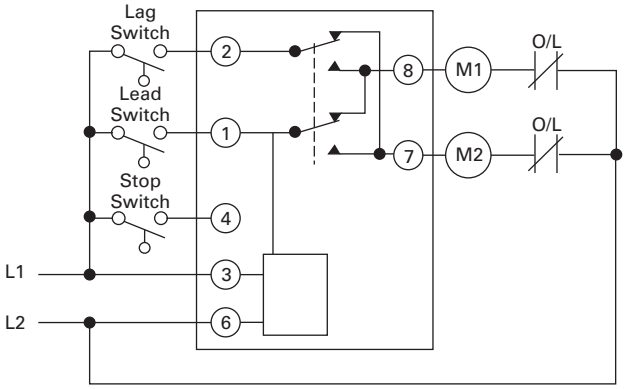

The alternating relay toggles to the LOAD B position. The entire cycle is then repeated, but with Load #2 (M2) energized first followed by Load #1 (M1). This type of operation is known as "Sequence On–Simultaneously Off (S.O.S.O.)"—the two loads are energized sequentially, but remain on together until the STOP switch is opened.

If both the STOP switch and LEAD switch fail to close and turn on the first load, both loads will be turned on simultaneously when the LAG switch is closed.

Dimensions

Approximate Dimensions in Inches (mm)

D85 Series—Alternating Relays

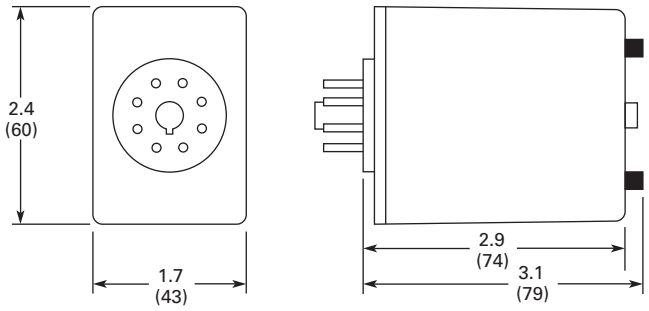

Safety Relays

Contents

Description	*Page*
Safety Relays	
Product Selection	**V7-T3-194**
Technical Data and Specifications	**V7-T3-195**
Dimensions	**V7-T3-198**

Product Description

Safety relays are intended to reliably monitor the signals from safety devices at all times and switch off quickly and reliably in an emergency. Single-channel and dual channel versions are available for the construction of safety applications. The internal logic of the safety relays monitors the safety circuits (emergency stop, guard door, and so on) and activates the enable paths in a fault-free condition. Upon actuation of the safety device or in the even of a fault, the enable paths are switched off. Any faults that occur in the control circuit, such as ground fault, cross connection fault or wire breakage are also detected.

Application Description

Eaton's ESR5 safety relays provide optimal safety and a high degree of reliability on plant machinery. Applications that meet the highest safety requirements in accordance with EN 954-1, EN ISO 13849-1 up to PL e and accordance with IEC 62061 up to SILCL 3 can be realized with the ESR5 safety relay.

Compatible with a wide variety of safety devices:

- Emergency stops
- Rope pulls
- Two-hand control stations
- Light curtain (OSSD)
- Gate enable device
- Safety switches

Features

- Use for the highest safety requirements in accordance with EN 954-1 EN ISO 13849-1, IEC 62061 and EC 61508
- Suitable for the world market with UL, cUL certifications and TÜV Rhineland functional safety certifications
- Applicable for EN 60204 stop categories 0 or 1
- Plug-in screw terminals for fast and fault-free replacement
- Multi-voltage versions (24–230 Vac/Vdc) for a flexible range of application
- Delayed and non-delayed contact expansions accommodate a wide variety of applications

Standards and Certifications

- UL 508; CSA C22.2 No 14-95; CE Marked
- UL/cUL file number: E29184
- Degree of protection: IP20
- TÜV Rhineland certified
- UL/cULus listed

Listed

Product Selection

Safety Relays

Technical Overview

Single Channel	Dual Channel	Safety Output (NO)	Safety Output (NO) (Delayed)	Output Delay	Signal Output (NC)	Feedback Output	Control Voltage	Removable Terminal Blocks	Type of Unit	Catalog Number
■	—	4	—	—	1	—	24 Vac/Vdc	■	Main	**ESR5-NO-41-24VAC-DC**
■	■	2	—	—	1	—	24 Vac/Vdc	■	Main	**ESR5-NO-21-24VAC-DC**
■	■	3	—	—	1	—	24 Vac/Vdc	■	Main	**ESR5-NO-31-24VAC-DC**
■	■	3	—	—	1	—	230 Vac	■	Main	**ESR5-NO-31-230VAC**
■	■	3	—	—	1	—	24–230 Vac/Vdc	■	Main	**ESR5-NO-31-AC-DC**
■	■	2	2	0.1–30s	—	—	24 Vdc	■	Main	**ESR5-NV3-30**
—	■	2	—	—	1	—	24 Vac/Vdc	■	Main	**ESR5-NZ-21-24VAC-DC**
■	—	5	—	—	1	1	24 Vac/Vdc	■	Expansion	**ESR5-NE-51-24VAC-DC**
■	—	—	4	0.3–3s	1	1	24 Vdc	■	Expansion	**ESR5-VE3-42**

Application Overview

Emergency Stop	Safety Switches	Light Curtain/ OSSD ①	Two-Hand Control (EN 574 Type III C)	Contact Expansion	Off-Delayed	Cross Circuit Recognition	Monitored Manual Reset ②	Catalog Number
■	■	—	—	—	—	—	—	**ESR5-NO-41-24VAC-DC**
■	■	—	—	—	—	■	—	**ESR5-NO-21-24VAC-DC**
■	■	—	—	—	—	■	—	**ESR5-NO-31-24VAC-DC**
■	■	—	—	—	—	■	■	**ESR5-NO-31-230VAC**
■	■	—	—	—	—	■	■	**ESR5-NO-31-AC-DC**
■	■	■	—	—	■	■	■	**ESR5-NV3-30**
—	■	—	■	—	—	■	—	**ESR5-NZ-21-24VAC-DC**
—	—	—	—	■	—	—	—	**ESR5-NE-51-24VAC-DC**
—	—	—	—	■	■	—	—	**ESR5-VE3-42**

Application Overview, continued

Single Channel	Dual Channel	Stop Category EN 60204	Control Category to EN 954-1	Achievable PL per ISO 13849-1	Achievable SIL per EN IEC 62061	Catalog Number
■	—	0	2	PL d	SIL 3	**ESR5-NO-41-24VAC-DC**
■	■	0	4	PL e	SIL 3	**ESR5-NO-21-24VAC-DC**
■	■	0	4	PL e	SIL 3	**ESR5-NO-31-24VAC-DC**
■	■	0	4	PL e	SIL 3	**ESR5-NO-31-230VAC**
■	■	0	4	PL e	SIL 3	**ESR5-NO-31-AC-DC**
■	■	0/1	4	PL e	SIL 3	**ESR5-NV3-30**
—	■	0	4	PL e	SIL 3	**ESR5-NZ-21-24VAC-DC**
■	—	0	4	PL e	SIL 3	**ESR5-NE-51-24VAC-DC**
■	—	1	3	PL d	SIL 2	**ESR5-VE3-42**

Notes

① Laser scanners or light curtains with OSSD outputs.

② All main units can also be reset automatically or manually.

Technical Data and Specifications

Safety Relay

Description	Unit	ESR5-NO-21_	ESR5-NO-41_	ESR5-NO-31-24VAC-DC	ESR5-NZ-21_
General					
Standards		EN ISO 13849-1, IEC 62061, IEC 61508, DIN EN 50178, UL/CUL listed	EN ISO 13849-1, IEC 62061, IEC 61508, DIN EN 50178, UL/CUL listed	EN ISO 13849-1, IEC 62061, IEC 61508, DIN EN 50178, UL/CUL listed	EN ISO 13849-1, IEC 62061, IEC 61508, DIN EN 50178, UL/CUL listed
Type-dependent standards		—	—	—	EN 574 Part no. IIIC
Lifespan, mechanical—c (contacts)	x 10^6	10	10	10	10
Maximum operating frequency	Ops/h	3600	3600	3600	3600
Climatic proofing		Cold according to EN 60068-2-1, dry heat according to EN60068-2-2, damp heat according to EN 60068-2-3	Dry heat according to EN60068-2-2, damp heat according to EN 60068-2-3	Cold according to EN 60068-2-1, dry heat according to EN60068-2-2, damp heat according to EN 60068-2-3	Dry heat according to EN60068-2-2, damp heat according to EN 60068-2-3
Ambient temperature	°F (°C)	–4 ° to 131 ° (–20 ° to 55 °)	–4 ° to 131 ° (–20 ° to 55 °)	–4 ° to 131 ° (–20 ° to 55 °)	–4 ° to 131 ° (–20 ° to 55 °)
Ambient temperature storage	°F (°C)	–13 ° to 167 ° (–25 ° to 75 °)	–13 ° to 167 ° (–25 ° to 75 °)	–13 ° to 167 ° (–25 ° to 75 °)	–13 ° to 167 ° (–25 ° to 75 °)
Mounting position		Any	Any	Any	Any
Vibration resistance (IEC/EN 60068-2-6)		2g, frequency: 10–150 Hz, amplitude: 0.15 mm	2g, frequency: 10–150 Hz, amplitude: 0.15 mm	2g, frequency: 10–150 Hz, amplitude: 0.15 mm	2 g, frequency: 10–150 Hz, amplitude: 0.15 mm
Shock resistance (IEC 60068-2-27)		—	—	—	—
Protection type					
Housing		IP20	IP20	IP20	IP20
Terminals		IP20	IP20	IP20	IP20
Protection against direct contact when actuated from front (IEC 0106 Part 100)		Finger- and back-of-hand proof	Finger- and back-of-hand proof	Finger- and back-of-hand proof	Finger- and back-of-hand proof
Weight	kg	0.17	0.22	0.17	0.22
Terminal capacity					
Solid or flexible	mm^2	1 x (0.2–2.5) 2 x (0.2–1)	1 x (0.2–2.5) 2 x (0.2–1)	1 x (0.2–2.5) 2 x (0.2–1)	1 x (0.2–2.5) 2 x (0.2–1)
Flexible with ferrule	mm^2	1 x (0.25–2.5) 2 x (0.25–1)	1 x (0.25–2.5) 2 x (0.25–1)	1 x (0.25–2.5) 2 x (0.25–1)	1 x (0.25–2.5) 2 x (0.25–1)
Solid or stranded	AWG	24–12	24–12	24–12	24–12
Terminal screw					
Pozidriv screwdriver	Size	2	2	2	2
Flat-blade screwdriver	mm	0.6 x 3.5	0.6 x 3.5	0.6 x 3.5	0.6 x 3.5
Max. tightening torque	Nm	0.6	0.6	0.6	0.6
Main Contacts					
Rated impulse withstand voltage—U_{imp}	Vac	6000	4000	4000	6000
Overvoltage category/pollution degree					
Outside		III/2	III/2	III/2	III/2
Inside		—	—	—	—
Rated insulation voltage—U_i	Vac	250	250	250	250
Rated operating voltage—U_e	Vac	230	230	230	230
Rated operation current					
AC-15					
230 V (360 ops./h)—I_e	A	5	4	5	4
230 V (3600 ops./h)—I_e	A	3	3	3	3
DC-13					
24 V (360 ops./h)—I_e	A	6	4	6	4
24 V (3600 ops./h)—I_e	A	3	2.5	3	2.5
Max. summation current of all poles					
24 Vac/Vdc devices	A	72	72	72	72
230 Vac devices	A	—	—	—	—
Square of the total current (and total current) of all current paths		72 A^2 (6 + 6)	72 A^2 (4.2 + 4.2 + 4.2 + 4.2)	72 A^2 (4.9 + 4.9 + 4.9)	72 A^2 (6 + 6)
Short-circuit protection					
Max. fuse	A gG/gL	10	6	10	6

Safety Relay, continued

Description	Unit	ESR5-NO-21_	ESR5-NO-41_	ESR5-NO-31-24VAC-DC	ESR5-NZ-21_
Power Supply Circuit					
Actuating voltage 50/60 Hz	Vac	24	24	24	24
Actuating voltage—U_s	Vdc	24	24	24	24
Voltage tolerance pick-up voltage	x_e	0.85–1.1	0.85–1.1	0.85–1.1	0.85–1.1
Power consumption					
AC operated 50/60 Hz	VA	—	—	—	—
AC operated 50/60 Hz	W	3.4	3.4	3.4	3
DC operated	W	1.6	1.6	1.6	1.5
Fuse for control circuit supply					
24 V		Short-circuit proof	Short-circuit proof	Short-circuit proof	Short-circuit proof
115/230 V		—	—	—	—
Control Circuit					
Rated output voltage	Vdc	24	24	24	24
Rated operational current	mA	S12, S22: 30, S34: 45	S12: 65, S34: 40	S12, S22: 30, S34: 45	S11, S21: 60, Y2: 45
Resistance—R		50	22	50	22
Short-circuit current	A	2.3	2.3	2.3	2.3
Response time	ms	100	65	100	50
Recovery time	ms	—	—	—	—
Response time with reset monitoring—t_{A1}	ms	—	—	—	—
Response time without reset monitoring—t_{A2}	ms	100	65	100	50
Reset time—t_R/t_{R1}	ms	Single-channel 45; dual-channel 10	45	Single-channel 45; dual-channel 10	20
Minimum on duration—t_M	ms	—	—	—	—
Recovery time—t_W	ms	Approx. 1000	Approx. 1000	Approx. 1000	Approx. 1000
Synchronous monitoring time—t_S	ms	—	—	—	500
Electromagnetic Compatibility (EMC)					
Emitted interference		EN 61000-6-4	EN 61000-6-4	EN 61000-6-4	EN 61000-6-4
Interference immunity		According to EN 61000-6-2, EN 62061	According to EN 61000-6-2	According to EN 61000-6-2, EN 62061	According to EN 61000-6-2

Safety Relay, continued

Description	Unit	ESR5-NO-31-230VAC	ESR5-NO-31-24V-230VAC-DC	ESR5-NV3_	ESR5-VE3_	ESR5-NE-51_
General						
Standards		EN ISO 13849-1, IEC 62061, IEC 61508, DIN EN 50178, UL/CUL listed	EN ISO 13849-1, IEC 62061, IEC 61508, DIN EN 50178, UL/CUL listed	EN ISO 13849-1, IEC 62061, IEC 61508, DIN EN 50178, UL/CUL listed	EN ISO 13849-1, IEC 62061, IEC 61508, DIN EN 50178, UL/CUL listed	EN ISO 13849-1, IEC 62061, IEC 61508, DIN EN 50178, UL/CUL listed
Type-dependent standards		EN 60204 (if applicable)	EN 60204 (if applicable)	EN 60204 (if applicable)	—	—
Lifespan, mechanical—c (contacts)	x 10^6	10	10	10	10	10
Maximum operating frequency	Ops/h	3600	3600	3600	900	3600
Climatic proofing		Dry heat according to EN60068-2-2, damp heat according to EN 60068-2-3	Dry heat according to EN60068-2-2, damp heat according to EN 60068-2-3	Cold in accordance with: EN 60068-2-1, dry heat in accordance with EN 60068-2-2, humidity storage test in accordance with 60068-2-78	Dry heat according to EN60068-2-2, damp heat according to EN 60068-2-3	Dry heat according to EN60068-2-2, damp heat according to EN 60068-2-3
Ambient temperature	°F (°C)	–4 ° to 131 ° (–20 ° to 55 °)	–4 ° to 131 ° (–20 ° to 55 °)	–4 ° to 131 ° (–20 ° to 55 °)	–4 ° to 131 ° (–20 ° to 55 °)	–4 ° to 131 ° (–20 ° to 55 °)
Ambient temperature storage	°F (°C)	–13 ° to 167 ° (–25 ° to 75 °)	–13 ° to 167 ° (–25 ° to 75 °)	–13 ° to 167 ° (–25 ° to 75 °)	–13 ° to 167 ° (–25 ° to 75 °)	–13 ° to 167 ° (–25 ° to 75 °)
Mounting position		Any	Any	Any	Any	Any
Vibration resistance (IEC/EN 60068-2-6)		2g, frequency: 10–150 Hz, amplitude: 0.15 mm	2g, frequency: 10–150 Hz, amplitude: 0.15 mm	2g, frequency: 10–150 Hz, amplitude: 0.15 mm	2g, frequency: 10–150 Hz, amplitude: 0.15 mm	2g, frequency: 10–150 Hz, amplitude: 0.15 mm
Shock resistance (IEC 60068-2-27)		—	—	—	—	—
Protection type						
Housing		IP40	IP40	IP20	IP20	IP20
Terminals		IP20	IP20	IP20	IP20	IP20
Protection against direct contact when actuated from front (IEC 0106 Part 100)		Finger- and back-of-hand proof	Finger- and back-of-hand proof	Finger- and back-of-hand proof	Finger- and back-of-hand proof	Finger- and back-of-hand proof
Weight	kg	0.3	0.3	0.17	0.17	0.22
Terminal capacity						
Solid or flexible	mm^2	1 x (0.2–2.5) 2 x (0.2–1)	1 x (0.2–2.5) 2 x (0.2–1)	1 x (0.2–2.5) 2 x (0.2–1)	1 x (0.2–2.5) 2 x (0.2–1)	1 x (0.2–2.5) 2 x (0.2–1)
Flexible with ferrule	mm^2	1 x (0.25–2.5) 2 x (0.25–1)	1 x (0.25–2.5) 2 x (0.25–1)	1 x (0.25–2.5) 2 x (0.25–1)	1 x (0.25–2.5) 2 x (0.25–1)	1 x (0.25–2.5) 2 x (0.25–1)
Solid or stranded	AWG	24–12	24–12	24–12	24–12	24–12
Terminal screw						
Pozidriv screwdriver	Size	2	2	2	2	2
Flat-blade screwdriver	mm	0.6 x 3.5	0.6 x 3.5	0.6 x 3.5	0.6 x 3.5	0.6 x 3.5
Max. tightening torque	Nm	0.6	0.6	0.6	0.6	0.6
Main Contacts						
Rated impulse withstand voltage—U_{imp}	Vac	6000	6000	4000	4000	4000
Overvoltage category/pollution degree						
Outside		III/2	III/2	III/2	III/2	III/2
Inside		—	—	—	—	—
Rated insulation voltage—U_i	Vac	250	250	250	250	250
Rated operating voltage—U_e	Vac	230	230	230	230	230
Rated operation current						
AC-15						
230 V (360 ops./h)—I_e	A	4	4	—	5	4
230 V (3600 ops./h)—I_e	A	3	3	3	3	3
DC-13						
24 V (360 ops./h)—I_e	A	4	4	—	6	4
24 V (3600 ops./h)—I_e	A	2.5	2.5	3	3	2.5
Max. summation current of all poles						
24 Vac/Vdc devices	A	50	50	49	50	50
230 Vac devices	A	50	50	—	—	—
Square of the total current (and total current) of all current paths		50 A^2 (4 + 4 + 4)	50 A^2 (4 + 4 + 4)	50 A^2 (4 + 4 + 4)	49 A^2 (3.5 + 3.5 + 3.5 + 3.5)	50 A^2 (3.7 + 3.7 + 3.7 + 3.7 + 3.7)
Short-circuit protection						
Max. fuse	A gG/gL	6	6	10	10	6

Safety Relay, continued

Description	Unit	ESR5-NO-31-230VAC	ESR5-NO-31-24V-230 VAC-DC	ESR5-NV3_	ESR5-VE3_	ESR5-NE-51_
Power Supply Circuit						
Actuating voltage 50/60 Hz	Vac	230	24–230	—	—	24
Actuating voltage—U_s	Vdc	—	230	24	24	24
Voltage tolerance pick-up voltage	x_e	0.85–1.1	0.85–1.1	0.85–1.1	0.85–1.1	0.8–1.1
Power consumption						
AC operated 50/60 Hz	VA	—	—	—	—	—
AC operated 50/60 Hz	W	5.8	5.8	—	—	2.2
DC operated	W	2.9	2.9	1.8	2	2.2
Fuse for control circuit supply						
24 V		—	Short-circuit proof	—	—	—
115/230 V		Short-circuit proof	Short-circuit proof	—	—	—
Control Circuit						
Rated output voltage	Vdc	24	24	24	24	24
Rated operational current	mA	S10, S12, S22: 35, S34, S35: 45	S10, S12, S22: 35, S34, S35: 45	S12, S22: 3.5, S34, S35: 7	A1, A2: 84, K1/K2: 5	A1, A2: 92
Resistance—R		11	11	500	—	—
Short-circuit current	A	0.7	0.7	0.1	—	—
Response time	ms	250	250	150	20	20
Recovery time	ms	—	—	—	—	—
Response time with reset monitoring—t_{A1}	ms	60	60	150	20	20
Response time without reset monitoring—t_{A2}	ms	250	250	150	20	20
Reset time—t_R/t_{R1}	ms	20	20	20 (non-delayed enable paths); 100 (min. delayed enable paths)	0.3–3 s (+50%) adjustable	20
Minimum on duration—t_M	ms	—	—	—	—	—
Recovery time—t_W	ms	Approx. 1000	Approx. 1000	Approx. 330	Approx. 1000	—
Synchronous monitoring time—t_S	ms	—	—	—	—	—
Electromagnetic Compatibility (EMC)						
Emitted interference		EN 61000-6-4	EN 61000-6-4	EN 61000-6-4	EN 61000-6-4	EN 61000-6-4
Interference immunity		According to EN 61000-6-2	According to EN 61000-6-2	According to EN 61000-6-2, EN 62061	According to EN 61000-6-2	According to EN 61000-6-2

Dimensions

Approximate Dimensions in Inches (mm)

Safety Relays, Contact Expansion Modules

ESR5_ 24 Vac/Vdc

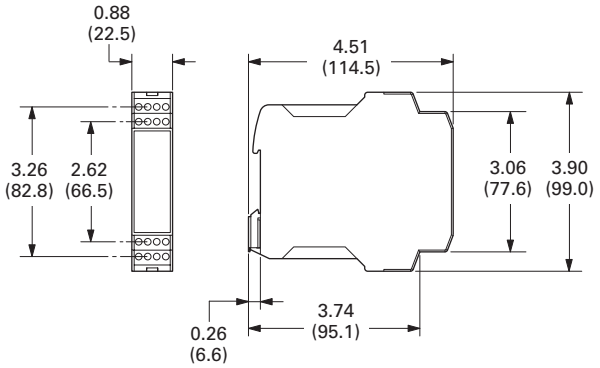

ESR5_ 230 Vac

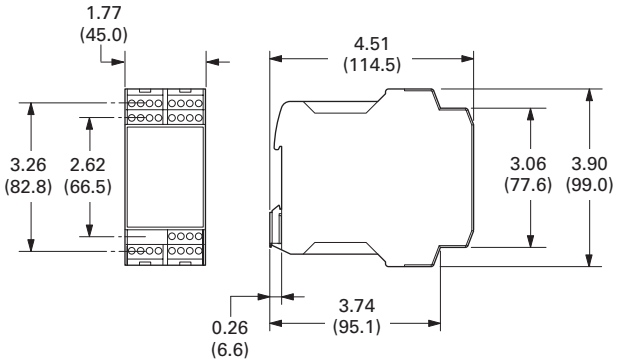

easySafety

Contents

Description	Page
easySafety	
Product Selection	V7-T3-200
Accessories	V7-T3-200
Technical Data and Specifications	V7-T3-201
Dimensions	V7-T3-204

Product Description

The easySafety control relay for safety-related applications monitors all commonly used safety devices and also takes over the required control tasks for the machine. Packed with a host of conventional safety relays in the form of safety function blocks, easySafety not only features integrated safety functions but also standard functions in a single device—all in one.

In addition to the safety circuit diagram containing the safety configuration, the safety control relay also contains a standard circuit diagram. This circuit diagram can be used for standard tasks, such as the processing of diagnostics signals or general control tasks of a machine.

Application Description

Because of the large number of safety function blocks, the user can tackle a large number of application options with only one device. The user can also respond directly to future and changing application requirements. This saves financial resources and offers future investment security. Last but not least, it reduces the stock-keeping required for special safety relays. The easySafety meets the requirements of Category 4 to EN 954-1, PL e to EN ISO 13849-1, SILCL 3 to EN IEC 62061 and SIL 3 to EN IEC 61508. With easySafety, it is possible to implement applications meeting the most stringent safety requirements.

Safety function blocks:

- Emergency stop
- Guard door monitoring with and without interlock/ guard locking
- Two-hand control (EN 574)
- Electro-sensitive protective devices (light curtains)
- Light curtain muting
- Enable switch
- Start device
- Operating mode selector
- Safety timing relay
- Overspeed monitoring
- Feedback loop monitoring (EDM)
- Zero speed monitoring

Features

- All-in-one: Safety and control functions combined in one device
- Simple configuration through prefabricated and tested safety components
- Direct state display and increased machine availability due to fast error diagnosis through integrated display
- Multistep password concept prevents unwanted manipulation

Standards and Certifications

- Product standards: CE marked; UL 508; CSA C22.20.4-04; CSA 22.2 No. 142-MI1987
- UL CCN: NRAQ
- CSA File No. 012528
- CSA Class No. 2252-81 and 2252-01
- TÜV Rhineland certified
- Degree of Protection IEC: IP20

FUNCTIONAL SAFETY
PROGR. SAFETY CONTR.
LISTED
E356668

Product Selection

easySafety

easySafety Relays ①

Inputs (Safety) Digital	Outputs (Safety) 6 A Relay	Outputs (Safety) Transistor	Outputs (Safety) Test Signal	Display + Keypad	Catalog Number
14	1 (redundant)	4	4	—	**ES4P-221-DMXX1**
14	1 (redundant)	4	4	Yes	**ES4P-221-DMXD1**
14	4	—	4	—	**ES4P-221-DRXX1**
14	4	—	4	Yes	**ES4P-221-DRXD1**

Accessories

easySoft

Programming Software

Description	Catalog Number
easySoft-Safety (including easySoftPro) ②	**ESP-SOFT**

Programming Cables

SUB-D Cable

Description	Catalog Number
SUB-D, nine-pole, serial, 2m	**EASY800-PC-CAB**

USB Cable

Description	Catalog Number
USB, 2m	**EASY800-USB-CAB**

Memory Card

Memory Card

Description	Catalog Number
256 kB module	**ES4A-MEM-CARD1**

Input/Output Simulator

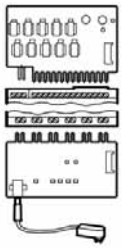

Input/Output Simulator

Description	Catalog Number
With plug-in power supply unit 100–240 Vac/24 Vdc	**ES4A-221-DMX-SIM**

Notes

① EN 954-1: 1996, Category 4.
EN ISO 13849-1: 2006, PL e (Performance Level).
IEC 61508: 1998, SIL 3 (Safety Integrity Level).
IEC 62061: 2005, SILCL 3 (Safety Integrity Level Claim Limit).
Expandable: standard inputs/outputs and standard bus systems.
24 Vdc supply voltage.

② Operating systems:
Windows® 2000 SP4, Windows XP SP1, Windows Vista (32 bit).

Technical Data and Specifications

easySafety Relay

Description		Unit	ES4P_
General			
Standards			EN 55011, EN 55022, IEC/EN 61000-4, IEC 60068-2-6, IEC 60068-2-27, EN 954-1: Category 4, EN ISO 13849-1: PL e, EN IEC 62061: SILCL 3, EN IEC 61508: SIL 3
Dimensions (W x H x D)		mm	107.5 (6 space units) x 90 x 72
Mounting			Top-hat rail IEC/EN 60715, 35 mm or screw fixing using fixing brackets ZB4-101-GF1 (accessories)
Times			
Inputs Maximum duration of external test pulse		ms	1
Semi-conductor output Off test pulse		ms	<1
Switch-off delay		ms	<0.15
Terminal Capacity			
Solid		mm^2	0.2–4 (AWG 22–12)
Flexible with ferrule		mm^2	0.2–2.5 (AWG 22–12)
Standard screwdriver		mm	3.5 x 0.8
Maximum tightening torque		Nm	0.6
Ambient Climatic Conditions			
Operating ambient temperature		°C	–25 to +55, low temperatures to IEC 60068-2-1, high temperatures to IEC 60068-2-2
Condensation			Prevent condensation by means of suitable measures
LCD display (clearly legible)		°C	0 to +55
Storage		°C	–40 to +70
Relative humidity, noncondensing (IEC/EN 60068-2-30)		%	5 to 95
Air pressure (in operation)		hPa	795 to 1080
Ambient Mechanical Conditions			
Protection type, IEC/EN 60529			IP20
Vibrations (IEC/EN 60068-2-6) Constant amplitude 0.15 mm		Hz	10 to 57
Constant acceleration, 2g		Hz	57 to 150
Mechanical shock resistance (IEC/EN 60068-2-27) semi-sinusoidal 15g/11 ms	Shocks		18
Drop to IEC/EN 60068-2-31	Drop	mm	50
Mounting position			Horizontal/vertical
Electromagnetic Compatibility (EMC) According to IEC/EN 61000-6-2			
Electrostatic discharge (IEC/EN 61000-4-2, Level 3, ESD) Air discharge		kV	8
Contact discharge		kV	6
Radio interference suppression (EN 55011)			EN 55011 Class B, EN 55022 Class B
Power pulses (surge) (IEC/EN 61000-4-5, Level 2)		kV	1 (supply cables, symmetrical)
Insulation Resistance			
Overvoltage category/pollution degree			III/2
Clearance in air and creepage distances			EN 50178, UL 508, CSA C22.2, No. 142, EN 60664-1:2003
Insulation resistance			EN 50178
Backup/Accuracy of the Real-Time Clock			
Accuracy of the real-time clock		s/day	Normally ±5 (±0.5 h/year)
Repetition Accuracy of Timing Relays in Standard Circuit			
Accuracy of timing relay (of value)		%	±0.02
Resolution Range "S"		ms	5
Range "M:S"		s	1
Retentive Memory			
Write cycles of the retentive memory (minimum)			10,000,000,000 (1010) (read/write cycles)

easySafety Relay, continued

Description		Unit	ES4P_
Power Supply			
Rated operational voltage	U_e	V	24 Vdc (–15/+20%)
Permissible range		Vdc	20.4 to 28.8
Ripple		%	≤ 5
Interfaces			
EASYNet (CAN-based)			
Bus termination (first and last station)			Yes
Control operating mode EASYNet			
Number of users			Maximum 8
NET Network			
Stations	Number		Maximum 8
Data transfer rate/distance			1000 Kbit/s, 6m 500 Kbit/s, 25m 250 Kbit/s, 60m 125 Kbit/s, 125m 50 Kbit/s, 300m 20 Kbit/s, 700m 10 Kbit/s, 1000m Bus lengths greater than 40m can only be achieved with enhanced cross-section conductors and terminal adapters
Potential isolation			
From power supply			Yes
From the inputs			Yes
From the outputs			Yes
From the PC interface, memory card, NET network, EASYLink			Yes
Bus termination (first and last station)			Yes
Terminal type			RJ45
Digital Inputs 24 Vdc			
Number			14
Inputs can be used as analog inputs			—
Status display			LCD display (if provided)
Potential isolation			
From power supply			No
Between digital inputs			No
From the outputs			Yes
From PC interface, memory card, EASYLink			No
From network EASYNet			Yes
Rated operational voltage	U_e	Vdc	24
At signal "0"	U_e	Vdc	<5
At signal "1"	U_e	Vdc	>15
Clock Outputs			
Number			4
Voltage		Vdc	24
Electrical isolation			No

easySafety Relay, continued

Description		Unit	ES4P_
Relay Outputs			
Number			4 for ES4P-…-DR_, 1 redundant for ES4P-…-DM_
Outputs in groups of			1
Parallel switching of outputs to increase power			Not permissible
Protection of an output relay			Fuse: 6 A gG, circuit breaker with characteristic C: 24 Vdc 4 A, Short-circuit current <250 A
Potential isolation			
From power supply			Yes
From the inputs			Yes
From PC interface, memory card, EASYNet, EASYLink			Yes
Safe isolation according to EN 50178		Vac	300
Basic insulation		Vac	600
Lifespan, mechanical	Operations	x 10^6	10
Contacts			
Conventional thermal current		A	6
Rated impulse withstand voltage U_{imp} contact coil		kV	6
Rated operational voltage	U_e	Vac	250
Rated insulation voltage	U_i	Vac	250
Safe isolation to EN 50178 between coil and contact		Vac	300
Making capacity			
AC-15, 230 Vac, 3 A	Operations		80,000
DC-13, 24 Vdc, 5 A, 0.1 Hz	Operations		40,000
Switching frequency			
Mechanical operations		x 10^6	10
Switching frequency		Hz	10
UL/CSA			
UL 508			B300/R300
Transistor Outputs			
Number			4
Rated operational voltage	U_e	Vdc	24
Permissible range	U_e	Vdc	20.4–28.8
Ripple		%	≤ 5
Protection against polarity reversal			Yes (Caution: A short-circuit will result if 0 V or GND is applied to the outputs in the event that the supply voltage is connected to the wrong poles.)
Potential isolation			
From power supply			Yes
From the inputs			Yes
From PC interface, memory card, network, EASYNet, EASYLink			Yes
Rated operational current at signal "1" DC	I_e	A	Maximum 0.5
At signal "1" with I_e = 0.5 A		V	$U = U_e - 1$ V
Short-circuit protection			Yes, thermal
Short-circuit tripping current for RA ≤ 10 m ohms		A	$0.7 \leq I_e \leq 2$ per output
Total short-circuit current		A	8
Peak short-circuit current		A	16
Thermal cutout			Yes
Maximum operating frequency at constant resistive load RL <100 kO (dependant on program and load)		Ops/h	40,000
Parallel connection of outputs			No
Status indication of the outputs			LCD display (if provided)
Inductive load			
Without external suppressor circuit			
Duty factor			$T_{0.95} \approx 3 \times T_{0.65} = 3 \times L/R$ $T_{0.95}$ = Time in ms, until 95% of the steady-state current has been reached
With external suppressor circuit			
Utilization factor		g	1
Duty factor		% DF	100
Maximum switching frequency, maximum duty factor	Operations		Depending on the suppressor circuit

Dimensions

Approximate Dimensions in Inches (mm)

ESR5_

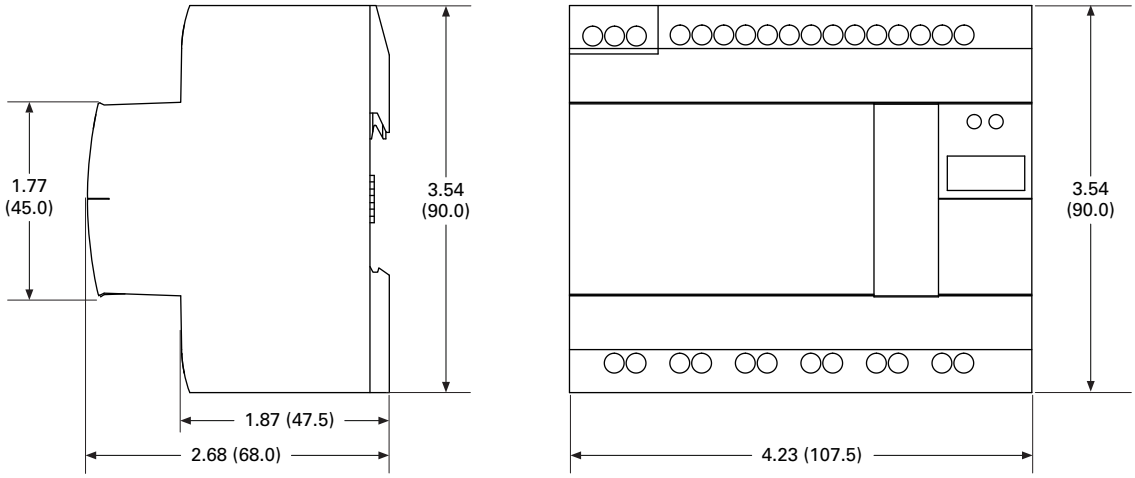

PLC, I/O and Communications Products

XC Series PLCs

XC152 Series PLCs

XN300 Series Remote I/O

4.1 XC Series Programmable Logic Controllers

Product Overview V7-T4-2
Product Selection Guide V7-T4-3
System Overview V7-T4-4
Product Selection V7-T4-6
Technical Data and Specifications V7-T4-12
Dimensions V7-T4-28

4.2 XC152 Series Programmable Logic Controllers

Product Description V7-T4-30
Product Selection V7-T4-31
Technical Data and Specifications V7-T4-32
Dimensions. V7-T4-33

4.3 XN300 Series Remote I/O

Product Description V7-T4-34
Features V7-T4-34
Standards and Certifications V7-T4-34
Product Selection V7-T4-35

Note: For EASY Programmable Relays, see Tab 3 in this volume.

XC Series Programmable Logic Controllers

Contents

Description	*Page*
XC Series Programmable Logic Controllers	
Product Selection Guide	**V7-T4-3**
Catalog Number Selection	**V7-T4-4**
System Overview	**V7-T4-4**
Product Selection	**V7-T4-6**
Accessories	**V7-T4-9**
Technical Data and Specifications	**V7-T4-12**
Dimensions	**V7-T4-28**

Product Overview

The XC100 and XC200 series modular PLCs stand out on account of their highly scalable design. Different CPU performance classes and a wide range of expansion modules are available. An important feature is their ability to be integrated in modern communication systems. Innovative solutions can be created thanks to the possibility of exchanging data with OPC clients via the Ethernet interface and the integrated web server.

Features and Benefits

Flexible Range

- Compact and modular CPU versions to suit the needs of the application
- With or without on-board Ethernet and/or built-in web server
- Range of CPU performance
- Integrated CANopen interface for easy integration with XI/ON remote I/O

High Performance

- Parallel backplane bus for faster processing speed
- Fiber optic CANopen interface for environments with severe electromagnetic interference
- High performance XC202 CPU with
  - 10/100 Mbit Ethernet
  - XSoft-CoDeSys programming software

Standards and Certifications

- IEC—UL508; CSA C22.2 No. 0-M; CSA C22.2 No. 142-M; CE marking
- UL File No.—E135462
- UL CCN—NRAQ
- CSA File No. 012528
- CSA Class No. 2252-01
- NA Certification—
  - UL Listed
  - CSA certified/cUL
- RoHS

Listed

Product Selection Guide

XC Series Programmable Logic Controllers

XC121 Compact PLC

Page V7-T4-6

This PLC is particularly suitable for applications where space is at premium and with high communication requirements.

- Two serial and two CAN interfaces enable:
  - the coupling of two CAN networks
  - Modbus master/slave coupling (RS-232 or RS-485)—CAN
  - RS-232—CAN coupling
- I/O expansion with 18 digital and 8 analog inputs/outputs
- 6 interrupt inputs
- Expandable with standard XIOC modules

XC101 Modular PLCs

Page V7-T4-6

The modular PLCs of the XC101 series are universal automation devices for small and medium-sized applications.

- Locally expandable with up to 15 XIOC modules
- Data storage on SD card
- CAN interface

XC201 Modular PLCs

Page V7-T4-7

The modular PLCs of the XC201 series offer a high CPU performance, a high speed and a wide range of communication options.

- Locally expandable with up to 15 XIOC modules
- Ethernet interface for communication and programming
- CAN interface
- Data storage on SD card or USB stick
- Web server enables visualization via CoDeSys
- Operating system update SD card or USB

XC202 Modular PLCs

Page V7-T4-7

The modular PLCs of the XC202 series offer higher CPU performance and memory than the XC201 PLCs.

- Locally expandable with up to 15 XIOC modules
- Ethernet interface for communication and programming
- CAN interface
- Data storage on SD card or USB stick
- Operating system update via Ethernet, SD card or USB
- Up to three IP addresses can be configured
- 29-bit CAN identifier

Features	XC121	XC101	XC201	XC202
Input voltage	24 Vdc	24 Vdc	24 Vdc	24 Vdc
Memory size	256 kB	64, 128 or 256 kB	256 kB or 2 MB	4 MB
Microprocessor	Infineon CC161	Infineon C164	MIPS RISC	ARM11
Processor speed	36 MHz	24 MHz	131 MHz	532 MHz
Cycle time per 1k instructions	<0.3 ms	<0.5 ms	<0.15 ms	<0.025 ms
SD card slot	Yes	Yes	Yes	Yes
USB interface	No	No	Yes	Yes
Real time clock	Yes	Yes	Yes	Yes
On-board digital inputs	—	8	8	8
On-board digital outputs	—	6	6	6
Interrupt inputs	6	4	2	2
Expandability	XIO-EXT base module + Up to 15 XIOC modules	Up to 15 XIOC modules	Up to 15 XIOC modules	Up to 15 XIOC modules
Removable terminal blocks	Yes	Yes	Yes	Yes
Screw terminal option	No	Yes	Yes	Yes
Spring-cage terminal option	Yes	Yes	Yes	Yes
Serial interface	1, RS-232 1, RS-232/RS-485	1, RS-232	1, RS-232	1, RS-232
Ethernet port	No	No	Yes	Yes
CANopen interface	2	1	1	1
On-board high speed counters	No	No	Yes	Yes
On-board encoder inputs	No	No	Yes	Yes
OPC server	Yes	Yes	Yes	Yes
Integrated web server	No	No	On suffix "-XV" models	Yes
FTP server	No	No	On suffix "-XV" models	Yes
Networks master	CANopen/easyNet	CANopen/PROFIBUS-DP/easyNet	Ethernet/CANopen/PROFIBUS-DP/ easyNet	Ethernet/CANopen/PROFIBUS-DP/ easyNet
Networks node/device	CANopen/PROFIBUS-DP®/ easyNet	CANopen/PROFIBUS-DP/ easyNet	Ethernet/CANopen/PROFIBUS-DP/ easyNet	Ethernet/CANopen/PROFIBUS-DP/ easyNet
Operating system	Proprietary	Proprietary	Windows CE	Windows CE
X-Soft-CoDeSys version	V2.3	V2.3	V2.3	V2.3 and 3.0

Catalog Number Selection

Controllers

XC - CPU 201 - EC 512K - XV

Model Number

101 =	Modular (Infineon C164—16 bit at 24 MHz)
121 =	Compact (Infineon XC161—16 bit at 36 MHz)
201 =	Modular (MIPS RISC—32 bit at 131 MHz)
202 =	Modular (ARM 11—32 bit at 532 MHz)

Communication Ports

C =	1 CANopen
2C =	2 CANopen
EC =	Ethernet and CANopen

User Memory

64K =	64 kB
128K =	128 kB
256K =	256 kB
512K =	2 MB
4M =	4 MB

Visualization Option

XV =	Web server

System Overview

System Configuration

① CPU 1 2 3 4 5 6 7

XIOC-BP-XC	XIOC-BP-2	XIOC-BP-2	XIOC-BP-3
XIOC-BP-XC1	XIOC-BP-3	XIOC-BP-3	

② CPU 1 2 3 4 5 6 7 8 9 10 11 12 13 14 15

XIOC-BP-XC	XIOC-BP-2	XIOC-BP-3	XIOC-BP-EXT	XIOC-BP-3	XIOC-BP-2	XIOC-BP-2
XIOC-BP-XC1	XIOC-BP-2	XIOC-BP-2	XIOC-BP-EXT	XIOC-BP-3	XIOC-BP-2	XIOC-BP-2

Notes

① Maximum basic version, ≤7 signal modules.
② Maximum total version, ≤15 signal modules.

Product Identification

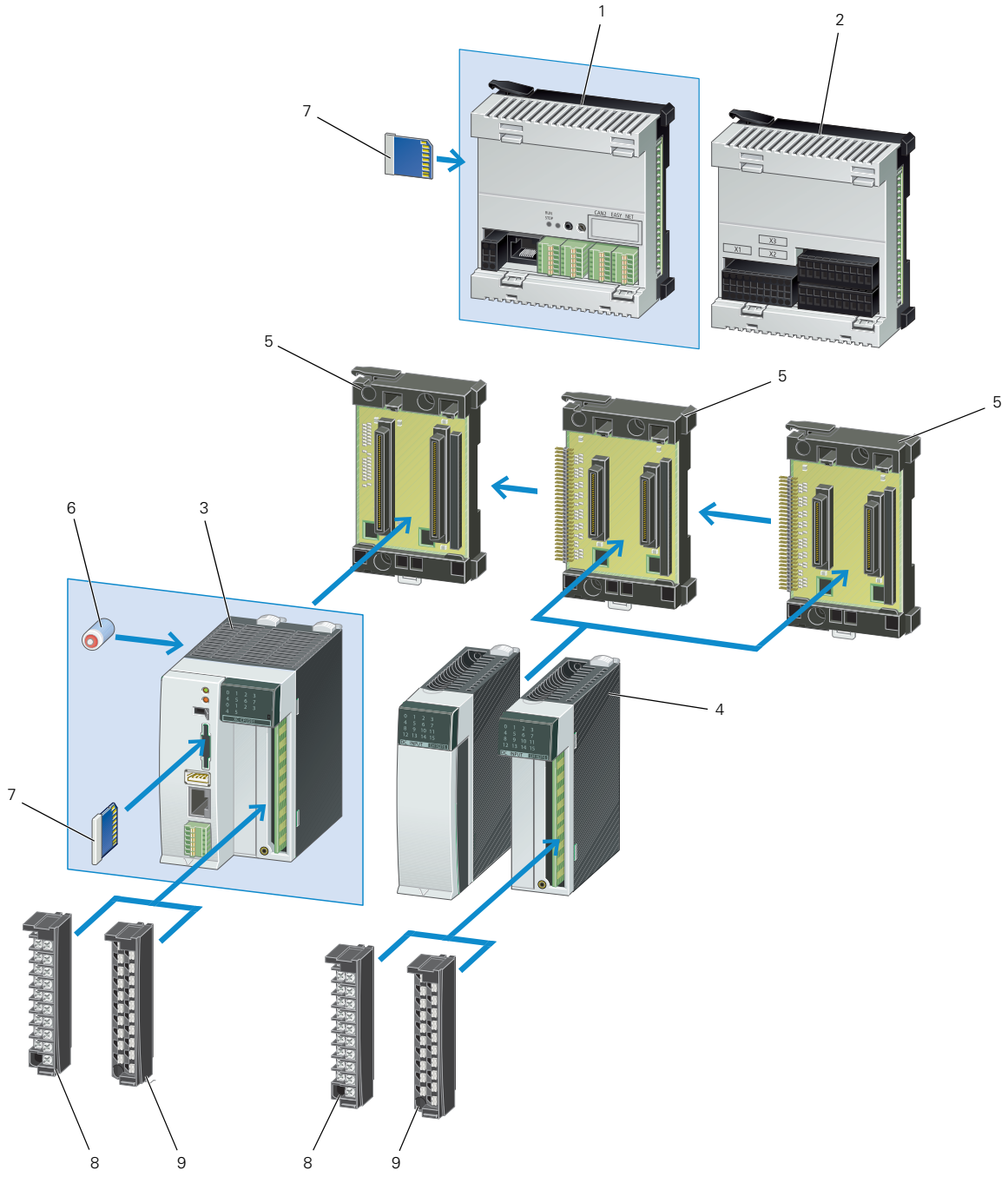

Item Number	Description
1	XC121 Compact PLC CPU
2	XC121 I.O Expansion module
3	XC100/XC200 Modular PLC
4	XIOC I/O modules
5	XIOC Module backplane

Item Number	Description
6	Battery
7	SD Memory card
8	XIOC Terminal block, screw terminals
9	XIOC Terminal block, spring-cage terminals

Product Selection

XC121 Compact PLC CPU

Can be locally expanded with I/O module XIO-EXT-121-1.

- 24 Vdc input supply
- Real time clock
- 2 CANopen interfaces (500 kB)
- RS-232 interface for programming and communication
- Second RS-232/RS-485 interface
- Slot for SD memory card
- Spring-cage terminal blocks
- OPC server
- RUN/STOP switch

XC121

XC121 Compact PLC

Program Memory Size	Cycle Time ①	Ethernet	CAN	Serial Interface	Web Server	Pkg. Qty.	Style Number	Catalog Number
256 kB	<0.3 ms	—	2	1, RS-232 1, RS-232/RS-485	—	1	290446	**XC-CPU121-2C256K**

XC121 I/O Expansion Module

Base I/O module for the XC121.

- 10 digital inputs 24 Vdc
- 6 interrupt inputs
- 8 digital inputs/outputs 24 Vdc 0.5A
- 2 analog inputs 0–10V
- 2 analog inputs 0–20 mA
- 2 analog inputs PT100 RTD
- 2 analog outputs 0–10V
- Removable spring-cage terminals
- Expandable with 15 XIOC modules ②

XC121 I/O Module

XC121 I/O Expansion Module

Digital Inputs	Digital Inputs/Outputs	Analog Inputs	Analog Outputs	Pkg. Qty.	Style Number	Catalog Number
10, 24 Vdc	8, 24 Vdc 0.5A	2, 0–10V 2, 0–20 mA 2, PT100 RTD	2, 0–10V	1	290450	**XIO-EXT121-1**

XC101 Modular PLCs

Order backplane, terminals and battery separately.

- 24 Vdc input supply
- Real time clock
- Expandable with 15 XIOC modules
- 8 digital inputs
- 4 interrupt inputs
- 6 digital outputs
- RS-232 interface for programming and communication
- CANopen interface (500 kB)
- Slot for SD memory card
- RUN/STOP switch and LED indicators

XC101

XC101 Modular PLCs

Program Memory Size	Cycle Time ①	Ethernet	CANOpen	Serial Interface	Web Server	Pkg. Qty.	Style Number	Catalog Number
64 kB	<0.5 ms	—	1	1, RS-232 typ.	—	1	262152	**XC-CPU101-C64K**
128 kB	<0.5 ms	—	1	1, RS-232 typ.	—	1	262146	**XC-CPU101-C128K**
256 kB	<0.5 ms	—	1	1, RS-232 typ.	—	1	274399	**XC-CPU101-C256K**

Notes

① Cycle time per 1k of instructions.
② Except the XIOC-NET-DP-M module.

XC201 Modular PLCs

Order backplane, terminals and battery accessories separately.

- 24 Vdc input supply
- Real time clock
- Expandable with 15 XIOC modules
- 8 digital inputs
- 2 interrupt inputs
- Incremental encoder inputs
- High speed counter (50 kHz) inputs
- 6 digital outputs
- Ethernet and RS-232 interface for programming and communication
- CANopen interface (1 MB)
- Slot for SD memory card
- USB interface
- RUN/STOP switch and LED indicators
- Built-in Web server on XV models

XC201

XC201 Modular PLCs

Program Memory Size	Cycle Time ①	Ethernet	CANOpen	Serial Interface	Web Server	Pkg. Qty.	Style Number	Catalog Number
256 kB	<0.15 ms	✓	1	1, RS-232	—	1	262155	**XC-CPU201-EC256K**
2 MB	<0.15 ms	✓	1	1, RS-232	—	1	262157	**XC-CPU201-EC512K**
256 kB Integrated web server	<0.15 ms	✓	1	1, RS-232	✓	1	262156	**XC-CPU201-EC256K-XV**
2 MB Integrated web server	<0.15 ms	✓	1	1, RS-232	✓	1	262158	**XC-CPU201-EC512K-XV**

XC202 Modular PLCs

Order backplane, terminals and battery accessories separately.

- 24 Vdc input supply
- Real time clock
- Expandable with 15 XIOC modules
- 8 digital inputs
- 2 interrupt inputs
- Incremental encoder inputs
- High speed counter (50 kHz) inputs
- 6 digital outputs
- Ethernet and RS-232 interface for programming and communication
- CANopen interface (1 MB)
- Slot for SD memory card
- USB interface
- RUN/STOP switch and LED indicators
- Built-in Web server

XC202

XC202 Modular PLCs

Program Memory Size	Cycle Time ①	Ethernet	CANOpen	Serial Interface	Web Server	Pkg. Qty.	Style Number	Catalog Number
4 MB Integrated web server	<0.025 ms	✓	1	1, RS-232	✓	1	134238	**XC-CPU202-EC4M-XV**

XIOC Expansion Modules

Order screw, spring-cage terminals or 40-pin connector cable for 32 I/O modules separately.

- 8, 16 and 32 input modules
- 8, 16 and 32 output modules
- User configurable input/output module
- Isolated relay output module

XIOC—Digital

XIOC Digital Expansion Modules

Description	Pkg. Qty.	Style Number	Catalog Number
8 inputs, 24 Vdc	1	257891	**XIOC-8DI**
16 inputs, 24 Vdc	1	257892	**XIOC-16DI**
32 inputs, 24 Vdc	1	267411	**XIOC-32DI**
8 outputs, 24 Vdc, 0.3A	1	257894	**XIOC-8DO**
16 outputs, 24 Vdc, 0.3A	1	257896	**XIOC-16DO**
16 outputs, 24 Vdc, 0.8A, short-circuit protected	1	257895	**XIOC-16DO-S**
16 terminals, 4 inputs, 12 configurable as inputs/outputs, 24 Vdc—outputs 0.5A	1	262322	**XIOC-16DX**
32 outputs, 24 Vdc, 0.2A	1	267413	**XIOC-32DO**
12 relay outputs, isolated	1	257897	**XIOC-12DO-R**

Note

① Cycle time per 1k of instructions.

XIOC—Analog

XIOC Analog Modules

Description	Pkg. Qty.	Style Number	Catalog Number
Inputs: 8 inputs 4–20 mA	1	262549	**XIOC-8AI-I2**
Inputs: 8 voltage inputs 0–10V	1	257899	**XIOC-8AI-U1**
Inputs: 8 voltage inputs, ±10V	1	257900	**XIOC-8AI-U2**
Inputs: 4 inputs for temperature monitoring, PT100/1000	1	257901	**XIOC-4T-PT**
Inputs: 4 inputs for thermocouples Type K, J, L, B, N, E, R, S, T	1	289933	**XIOC-4AI-T**
Outputs: 2 outputs, ±10V	1	257904	**XIOC-2AO-U2**
Outputs: 2 outputs 0–10V, 2 outputs 4–20 mA	1	257902	**XIOC-2AO-U1-2AO-I2**
Outputs: 4 outputs 0–10 V	1	257903	**XIOC-4AO-U1**
Combination modules: 2 inputs and 1 output 0–10V/1 ms conversion time	1	262409	**XIOC-2AI-1AO-U1**
Combination modules: 2 inputs and 1 output 0–10V, 0–20 mA/1 ms conversion time, individual changeover	1	281545	**XIOC-2AI-1AO-U1-I1**
Combination modules: 4 inputs and 2 outputs 0–10V/1 ms conversion time	1	262405	**XIOC-4AI-2AO-U1**
Combination modules: 4 inputs and 2 outputs 0–10V, 0–20 mA/1 ms conversion time, individual changeover	1	281544	**XIOC-4AI-2AO-U1-I1**

XIOC—Counter

Counter Modules

Description	Pkg. Qty.	Style Number	Catalog Number
1 input up to 100 kHz, 24 Vdc, 5 Vdc, 2 digital transistor outputs, opto-isolated, 24 Vdc 30-pin connector required for counter module	1	257906	**XIOC-1CNT-100KHZ**
2 inputs up to 100 kHz, (24 Vdc or 5V diff), 4 digital transistor outputs, opto-isolated, 24 Vdc 30-pin connector required for counter module	1	257907	**XIOC-2CNT-100KHZ**
2 incremental encoders up to 400 kHz, 5 Vdc, 2 analog outputs ±10V	1	262417	**XIOC-2CNT-2AO-INC**

XIOC—Communication Card

Communication Modules

Description	Pkg. Qty.	Style Number	Catalog Number
PROFIBUS-DP master module	1	257908	**XIOC-NET-DP-M**
PROFIBUS-DP node module	1	286419	**XIOC-NET-DP-S**
Serial interfaces: RS-232C, RS-485, RS-422 (for XC101, XC201 and XC202) Modes of operation: Transparent mode, Modbus master/node	1	267191	**XIOC-SER**
Serial interfaces: RS-232C, RS-485, RS-422 (for XC201 and XC202 only) Modes of operation: Transparent mode, Modbus master/node	1	135265	**XIOC-TC1**

Accessories

Terminals

Terminals

One 18 pole terminal plug is required for each digital and analog module.

Description	Pkg. Qty.	Style Number	Catalog Number
18-pin connector with screw terminals for digital or analog I/O	10	258102	**XIOC-TERM-18S**
18-pin connector with spring-cage terminal for digital or analog I/O	10	258104	**XIOC-TERM-18T**
40-pin connector for digital module, with 4 m cable XIOC-32DI XIOC-32DO	1	267414	**XIOC-TERM32**
30-pin connector for counter module, with 4 m cable XIOC-1CNT-100KHZ XIOC-2CNT-100KHZ	1	262248	**XIOC-TERM30-CNT4**

Module Backplane

Backplane

Description	Pkg. Qty.	Style Number	Catalog Number
Basic backplane for mounting XC100/200 on top-hat rail, can be expanded Width: 2 slots for controller	1	260792	**XIOC-BP-XC**
Expansion backplane for mounting XIOC modules on top-hat rail, can be expanded Width: 2 slots for XIOC modules	1	260794	**XIOC-BP-2**

Backplane

Basic backplane for mounting XC100/200 on DIN rail, can be expanded Width: 3 slots for controller and one XIOC module	1	260793	**XIOC-BP-XC1**
Expansion backplane for mounting XIOC modules on DIN rail, can be expanded Width: 3 slots for XIOC modules	1	260795	**XIOC-BP-3**
Expansion backplane for mounting XIOC modules on DIN rail, can be expanded Width: 3 slots for XIOC modules ①	1	274291	**XIOC-BP-EXT**

Memory Card

Memory Card

For storage of programs, data, recipes for XC100, XC121, XC200.

Description	Pkg. Qty.	Style Number	Catalog Number
512 MB	1	138257	**XT-MEM-MM512M**
32 MB	1	262731	**XT-MEM-MM32M**

Note

① Module backplane for expansion with up to 15 modules, must be plugged into the 6th slot.

Battery

Battery

Description	Pkg. Qty.	Style Number	Catalog Number
Lithium 1/2 AA 3.6V battery for backup of real-time clock	1	256209	**XT-CPU-BAT1**

Programming Cables

	Description	Pkg. Qty.	Style Number	Catalog Number
D-Sub 9-Pin	2m, D-sub 9-pin, serial	1	262186	**XT-SUB-D/RJ45**
Ethernet Cross	2m, Ethernet cross	1	256487	**XT-CAT5-X-2**
	5m, Ethernet cross	1	256488	**XT-CAT5-X-5**
Programming	Programming cable for XC through USB interface	1	115735	**EU4A-RJ45-USB-CAB1**

Connection Cable

Connection Cables

Description	Pkg. Qty.	Style Number	Catalog Number
0.3m: Connection cable for XC200 to interface switch	1	256283	**EASY-NT-30**
0.8m: Connection cable for XC200 to interface switch	1	256284	**EASY-NT-80**
1.5m: Connection cable for XC200 to interface switch	1	256285	**EASY-NT-150**

Empty Module

Empty Module

Description	Pkg. Qty.	Style Number	Catalog Number
Empty module to cover open XIOC slots	1	288894	**XIOC-NOP**

Interface Switch

Interface Switch

Description	Pkg. Qty.	Style Number	Catalog Number
Interface adapter to split the combined RS-232/Ethernet interface of the XC200 into RJ45 sockets. Connection cable EASY-NT-30/80/150 usable for connection to XC200	1	289170	**XT-RJ45-ETH-RS232**

Filter

Filter

Description	Pkg. Qty.	Style Number	Catalog Number
Interference suppression of the external 24 Vdc supply of the XC100/200. Maximum current consumption: 2.2A	1	285316	**XT-FIL-1**
Power supply interference suppression of I/O modules of XC100/200. Maximum current consumption: 12A	1	118980	**XT-FIL-2**

XSoft-CoDeSys-2 Software

Combined Logic and Visualization Development for XC Series PLCs

IEC 61131-3 Programming Languages

- Ladder Diagram
- Structured Text
- Sequential function chart
- Function block diagram
- Freely definable function block chart/continuous function chart
- Instruction List

Project Development

- Automatic variable declaration
- On-line editing
- Pop-up variable and function search/pick tools
- Automatic formatting and color coding of logic/ declaration text
- Re-usable Visual-Logic Function Blocks

Debugging and commissioning

XSoft-CoDeSys-2 offers you a number of important functions for debugging, testing and commissioning your applications quickly and efficiently.

All these features are available as soon as you log on to the XV HMI-PLC or XC200 PLC (online mode) over an Ethernet connection.

Target Visualization

Integrated design of Operator Interface screens for the XV HMI-PLC series. Visualization and logic developed as part of the same project. Simplifies screen design and always keeps the Logic and visualization in synch.

Web Visualization

Optionally XSoft-CoDeSys-2 can automatically generate XML-based runtime screens to make the screens from the XV HMI-PLC accessible remotely using a web browser with a JavaScript plug-in such as Internet Explorer®, Firefox® and others.

Simulation

Users can also test the application when the XV HMI-PLC is not connected to the process. This is possible thanks to the integrated online simulation feature. Simulation supports both the screens and logic that have been designed using XSoft-CoDeSys.

Advanced Features

- Up to 16 time and/or event driven tasks per project
- Each task can include multiple logic programs or subroutines
- Programs and screen designs can be exported and imported to support reuse
- Powerful, built-in function block libraries
- Ability to create user-defined function blocks
- Fieldbus Configurator for CANopen, PROFIBUS-DP and SmartWire-DT® device I/O
- Ethernet and serial communication function blocks (OPC server, UDP, TCP/IP, FTP client/ server, Modbus Master/Node, email, SMS, and more)
- 8 level password protection
- Web access selectable per screen
- System function libraries (OS Storage Card, and more)
- On-line and historical alarms
- On-line and historical trends

System Requirements

Windows XP and Windows 7 32-bit systems

XSoft-CoDeSys-2

XSoft-CoDeSys-2 Software

Description	Catalog Number
Single Seat License	**SW-XSOFT-CODESYS-2-S**
Multiple Seat License (3)	**SW-XSOFT-CODESYS-2-M**

Technical Data and Specifications

XC121 Compact PLC

Description	Unit	XC-CPU121-2C256K
General		
Standards		IEC/EN 61131-2; EN 50178
Ambient temperature	°F (°C)	32° to 131° (0° to 55°)
Storage	°F (°C)	–13° to 158° (–25° to 70°)
Mounting position		Horizontal
Relative humidity, noncondensing (IEC/EN 60068-2-30)	%	10–95
Air pressure (in operation)	hPa	795–1080
Vibration resistance		Frequency 5–9 Hz; 3.5 mm amplitude 9–150 Hz; 1.0g constant acceleration
Mechanical shock resistance		15g/11 ms
Overvoltage category		II
Pollution degree		2
Degree of protection		IP20
Rated insulation voltage (U_i)	V	500
Emitted interference		EN 61000-6-4
Interference immunity		EN 61000-6-2
Backup time		At least 72 hours
Weight	kg	0.15
Electromagnetic Compatibility (EMC)		Refer to Page **V7-T4-27**
Connections		
Supply voltage		
Connection type		—
Terminal capacity	mm^2	0.14–1 (AWG28-18)
COM1 interface		
Connection type		RJ45
COM2, CAN1, CAN2 interfaces		
Connection type		Spring-loaded terminal block, 6-pole
Terminal capacity	mm^2	0.14–0.5 (AWG28-20)
Power Supply		
Input voltage	Vdc	24
Permissible range	Vdc	20.4–28.8
Input power	W	Max. 1.44
Input current	mA	60
Ripple	%	≤5
Maximum heat dissipation (without local I/O) (P_v)	W	6
Overvoltage protection		Yes
Protection against polarity reversal		Yes
Inrush current	x I_n	No limitation (limited only by upstream 24 Vdc power supply unit)
Supply failure bridging		
Duration of power failure	ms	10
Repetition rate	s	1
External supply filter		Part No.: XT-FIL-1, Refer to **Page V7-T4-10**
Memory		
Program code/program data	kByte	256/244
Marker/input/output/retain data	kByte	16/4/4/8
Cycle time for 1k of instructions (bits, bytes)	ms	<0.3

XC121 Compact PLC, continued

Description	Unit	XC-CPU121-2C256K
Interfaces		
Serial interface (RS-232) without handshake lines		
Baud rate	kbit/s	Programming (character format: 8 data bits, No parity, 1 stop bit) 19.2, 38.4 (default), 57.6
Connector type		RJ45
Potential isolation		No
In transparent mode		
Baud rate	kbit/s	0.3, 0.6, 1.2, 2.4, 4.8, 9.6, 19.2, 38.4, 57.6, 115.2
Character formats		8E1, 8O1, 8N1, 8N2, 7E2, 7O2, 7N2, 7E1
Number of send bytes for block		190
Number of receive bytes for block		190
COM2 (RS-232/RS-485) without handshake lines		
Baud rate	kbit/s	Transparent mode (setting through function blocks) 0.3, 0.6, 1.2, 2.4, 4.8, 9.6, 19.2, 38.4, 57.6
Character formats		8E1, 8O1, 8N1, 8N2, 7E2, 7O2, 7N2, 7E1 (setting through function blocks)
Potential isolation		No
Bus termination		External, for RS-485
CAN1/CAN2 interface		
Baud rate	kbit/s	10 – 500
Potential isolation		No
Stations		126
Bus termination		Adjustable for each interface (CAN1/CAN2)
PDO type		Asyn., cyc., acyc.
Power Supply of Local Inputs/Outputs (24 V_Q/0 V_Q)		
Input voltage	Vdc	24
Voltage range	Vdc	19.2–30, observe polarity
Potential isolation		
Between power supply and CPU voltage		Yes
Overvoltage protection		Yes

XC121 Expansion Module

Description	Unit	XIO-EXT121-1
General		
Standards		IEC/EN 61131-2; EN 50178
Ambient temperature	°F (°C)	32° to 131° (0° to 55°)
Storage	°F (°C)	–13° to 158° (–25° to 70°)
Mounting position		Horizontal
Relative humidity, noncondensing (IEC/EN 60068-2-30)	%	10–95
Air pressure (in operation)	hPa	795–1080
Vibration resistance		Frequency 5–9 Hz; 3.5 mm amplitude 9–150 Hz; 1.0g constant acceleration
Mechanical shock resistance		15g/11 ms
Overvoltage category		II
Pollution degree		2
Degree of protection		IP20
Rated insulation voltage (U_i)	V	500
Emitted interference		EN 61000-6-4
Interference immunity		EN 61000-6-2
Backup time		At least 72 hours
Weight	kg	0.15
Electromagnetic Compatibility (EMC)		Refer to Page **V7-T4-27**
Connections		
X1 connector		
Connector type		Spring-loaded terminal block, 20 pole, B2L 3.5
Terminal capacity (solid)	mm^2	0.5–1
X2/X3 connector		
Connector type		Spring-loaded terminal block, 10-pole, BLZF 3.5/180 or BLI/O 3.5/10F with LEDs
Terminal capacity (solid)	mm^2	0.5–1
Power Supply		
Supply failure bridging		
Duration of power failure	ms	10
Repetition rate	s	1
Input voltage	Vdc	24
Permissible range	Vdc	20.4 – 28.8
Input power	W	Max.1.68
Input current	mA	70
Ripple	%	≤5
Overvoltage protection		Yes
Protection against polarity reversal		Yes
Inrush current	x I_n	Max. 1A
Output voltage for signal modules		
Max. field current (I_L)	A	2
Digital Inputs		
Number		X2: 9 with plug BLI/O 3.5/10F or 10 with plug BLZF 3.5/180 X3: 8 (can also be used as outputs)
Rated voltage (U_e)	Vdc	24
At state "0" (U_e)	Vdc	<5
At state "1" (U_e)	Vdc	>15
Rated operational current		
At state "1" (I_e)	mA	3.3
Delay time		
X2: DI0–DI3	µs	20
X2: DI4–DI9	µs	250
X2: DX0–DX7	ms	20
Potential isolation		No

XC121 Expansion Module, continued

Description	Unit	XIO-EXT121-1
Digital Outputs		
Number		At X3: 8 (can also be used as inputs)
Rated voltage		
Rated voltage (U_e)	Vdc	24
Permissible range		20.4–28.8 Vdc
Ripple	%	≤5
Rated operational current		
At state "1" (I_e)	A	0.5 at 24 Vac
Utilization factor (%)	g	1
Maximum duty factor	ms	100%
Lamp load without (R_v)	W	5
Potential isolation		No
Residual current at state "0" per channel	mA	<0.1
Max. output voltage		
At state "0" with external load <10M ohms	V	2.5
At state "1" at I_e = 0.5A	V	U = U_e–1V
Short-circuit tripping current		
Short-circuit tripping current for R_a <10M ohms	A	0.7 ≤ I_e ≤2 for output
Total short-circuit current	A	16
Peak short-circuit current	A	32
Max. operating frequency	ops/h	40,000
Parallel connection capability		Yes
Analog Inputs 0–10V		
Number of channels		2
Primary voltage range	V	0–10
Resolution	bit	10
Conversion time	ms	≤5
Overall accuracy		≤ ± 1% (of full-scale value)
Input resistance	kohm	200
Analog Inputs 0–20 mA		
Number of channels		2
Primary voltage range	mA	0–20
Resolution	bit	10
Conversion time	ms	≤5
Overall accuracy		≤ ± 1% (of full-scale value)
Input resistance	ohm	50
PT100 RTD		
Number of channels		2
Temperature range	°F (°C)	–348° to 392° (–200° to 200°)
Resistance range	ohm	18.5–175.8
Resolution	bit	10
Overall accuracy		≤ ± 2%
Analog Outputs		
Number of channels		2
Secondary voltage range	V	0–10
Resolution	bit	12
Conversion time	ms	≤5
Overall accuracy		≤ ± 1% (of full-scale value)
External load resistance (R)	kohm	10

XC101 Modular PLCs

Description	Unit	XC-CPU101-C64K-8DI-6DO	XC-CPU101-C128K-8DI-6DO	XC-CPU101-FC128K-8DI-6DO	XC-CPU101-C256K-8DI-6DO
General					
Standards		IEC/EN 61131-2; EN 50178	IEC/EN 61131-2; EN 50178	IEC/EN 61131-2; EN 50178	IEC/EN 61131-2; EN 50178
Ambient temperature	°F (°C)	32° to 131° (0° to 55°)	32° to 131° (0° to 55°)	32° to 131° (0° to 55°)	32° to 131° (0° to 55°)
Storage	°F (°C)	–13° to 158° (–25° to 70°)	–13° to 158° (–25° to 70°)	–13° to 158° (–25° to 70°)	–13° to 158° (–25° to 70°)
Mounting position		Horizontal	Horizontal	Horizontal	Horizontal
Relative humidity, noncondensing (IEC/EN 60068-2-30)	%	10–95	10–95	10–95	10–95
Air pressure (in operation)	hPa	795–1080	795–1080	795–1080	795–1080
Vibration resistance		10–57 Hz ±0.075 mm/57–150 Hz ±1.0g			
Mechanical shock resistance		15g/11 ms	15g/11 ms	15g/11 ms	15g/11 ms
Overvoltage category		II	II	II	II
Pollution degree		2	2	2	2
Degree of protection		IP20	IP20	IP20	IP20
Rated insulation voltage (U_i)	V	500	500	500	500
Emitted interference	U_i	EN 61000-6-4, Class A	EN 61000-6-4, Class A	EN 61000-6-4, Class A	EN 61000-6-4, Class A
Interference immunity		EN 61000-6-2	EN 61000-6-2	EN 61000-6-2	EN 61000-6-2
Battery (lifespan)		Normally 5 years	Normally 5 years	Normally 5 years	Normally 5 years
Weight	kg	0.23	0.23	0.23	0.23
Terminals		Plug-in terminal block	Plug-in terminal block	Plug-in terminal block	Plug-in terminal block
Terminal capacity					
Screw terminals					
Flexible with ferrule	mm^2	0.5–1.5	0.5–1.5	0.5–1.5	0.5–1.5
Solid	mm^2	0.5–2.5	0.5–2.5	0.5–2.5	0.5–2.5
Spring-cage terminal					
Flexible	mm^2	0.34–1.0	0.34–1.0	0.34–1.0	0.34–1.0
Solid	mm^2	0.14–1.0	0.14–1.0	0.14–1.0	0.14–1.0
Electromagnetic Compatibility (EMC)		Refer to Page **V7-T4-27**			
Power Supply					
Mains failure duration	ms	10	10	10	10
Repetition rate	s	1	1	1	1
Input voltage	Vdc	24	24	24	24
Permissible range	Vdc	20.4–28.8	20.4–28.8	20.4–28.8	20.4–28.8
Input power	W	Max. 26	Max. 26	Max. 26	Max. 26
Ripple	%	≤5	≤5	≤5	≤5
Maximum heat dissipation (without local I/O) (P_v)	W	6	6	6	6
Overvoltage protection		Yes	Yes	Yes	Yes
Protection against polarity reversal		Yes	Yes	Yes	Yes
Mains filter (external)		Yes	Yes	Yes	Yes
Inrush current	x I_n	Not limited, (limiting only by a supply-side 24 Vdc PSU)			
Output voltage for signal modules					
Rated value	Vdc	5	5	5	5
Output current	A	3.2	3.2	3.2	3.2
Short-circuit rating		Yes	Yes	Yes	Yes
Isolated from supply voltage		No	No	No	No
CPU					
Microprocessor		Infineon C164	Infineon C164	Infineon C164	Infineon C164
Memory					
Program code/program data	kByte	64/64	128/128	128/128	256/256
Marker/retain data	kByte	4/4	8/8	8/8	8/8
Cycle time for 1k of instructions (bits, bytes)	ms	<0.5	<0.5	<0.5	<0.5

XC101 Modular PLCs, continued

Description	Unit	XC-CPU101-C64K-8DI-6DO	XC-CPU101-C128K-8DI-6DO	XC-CPU101-FC128K-8DI-6DO	XC-CPU101- C256K-8DI-6DO
Interfaces					
Serial interface (RS-232) without handshake lines					
Baud rate	kbit/s	Max. 57.6	Max. 57.6	Max. 57.6	Max. 57.6
Connections		RJ45	RJ45	RJ45	RJ45
Potential isolation		No	No	No	No
CANopen					
Maximum data transfer rate	bit/s	500,000	500,000	500,000	500,000
Potential isolation		Yes	Yes	Yes	Yes
Device profile		To DS 301 V4	To DS 301 V4	To DS 301 V4	To DS 301 V4
PDO type		Asyn., cyc., acyc.	Asyn., cyc., acyc.	Asyn., cyc., acyc.	Asyn., cyc., acyc.
Connection		Plug-in terminal block	Plug-in terminal block	Optical fiber interface, wavelength 660 mm, plug for example HFBR-4516 Agilent Technologies	Plug-in terminal block
Bus terminating resistors		External	External	External	External
Stations	Number	Max. 126	Max. 126	Max. 126	Max. 126
Watchdog		Yes	Yes	Yes	Yes
RTC (real-time clock)		Yes	Yes	Yes	Yes
Power Supply of Local Inputs/Outputs (24 V_Q/0 V_Q)					
Input voltage	Vdc	24	24	24	24
Voltage range	Vdc	19.2–30, observe polarity	19.2–30, observe polarity	19.2–30, observe polarity	19.2–30, observe polarity
Potential isolation					
Between power supply and CPU voltage		Yes	Yes	Yes	Yes
Overvoltage protection		Yes	Yes	Yes	Yes
Protection against polarity reversal		Yes	Yes	Yes	Yes
Digital Inputs					
Input current for channel at rated voltage	mA	Normally 3.5	Normally 3.5	Normally 3.5	Normally 3.5
Heat dissipation for channel	mW	Normally 85	Normally 85	Normally 85	Normally 85
Voltage level to IEC/EN 61131-2					
Limit value type 1		Low <5 Vdc/High >15 Vdc	Low <5 Vdc,/High >15 Vdc	Low <5 Vdc/High >15 Vdc	Low <5 Vdc/High >15 Vdc
Input delay					
OFF ⟶ ON	ms	Normally 0.1	Normally 0.1	Normally 0.1	Normally 0.1
ON ⟶ OFF	ms	Normally 0.1	Normally 0.1	Normally 0.1	Normally 0.1
Inputs	Number	8 (of which 4 interrupt inputs)	8 (of which 4 interrupt inputs)	8 (of which 4 interrupt inputs)	8 (of which 4 interrupt inputs)
Channels with the same reference potential	Number	8	8	8	8
Status indication		LED	LED	LED	LED
Digital Outputs					
Channels	Number	6	6	6	6
Heat dissipation for channel	W	0.08	0.08	0.08	0.08
Load circuits	A	0.5	0.5	0.5	0.5
Output delay					
OFF ⟶ ON		Normally 0.1 ms	Normally 0.1 ms	Normally 0.1 ms	Normally 0.1 ms
ON ⟶ OFF		Normally 0.1 ms	Normally 0.1 ms	Normally 0.1 ms	Normally 0.1 ms
Channels with the same reference potential	Number	6	6	6	6
Status indication		LED	LED	LED	LED
Switching capacity		IEC/EN 60947-5-1, utilization category DC-13	IEC/EN 60947-5-1, utilization category DC-13	IEC/EN 60947-5-1, utilization category DC-13	IEC/EN 60947-5-1, utilization category DC-13
Duty factor	% DF	100	100	100	100
Utilization factor	g	1	1	1	1

XC200 Series Modular PLCs

Description	Unit	XC-CPU201-EC256K-8DI-6DO(-XV)	XC-CPU201-EC512K-8DI-6DO(-XV)	XC-CPU202-EC4M-8DI-6DO-XV
General				
Standards		IEC/EN 61131-2; EN 50178	IEC/EN 61131-2; EN 50178	IEC/EN 61131-2; EN 50178
Ambient temperature	°F (°C)	32° to 131° (0° to 55°)	32° to 131° (0° to 55°)	32° to 131° (0° to 55°)
Storage	°F (°C)	–13° to 158° (–25° to 70°)	–13° to 158° (–25° to 70°)	–13° to 158° (–25° to 70°)
Mounting position		Horizontal	Horizontal	Horizontal
Relative humidity, noncondensing (IEC/EN 60068-2-30)	%	10–95	10–95	10–95
Air pressure (in operation)	hPa	795–1080	795–1080	795–1080
Vibration resistance		10–57 Hz ±0.075 mm 57–150 Hz ±1.0g	10–57 Hz ±0.075 mm 57–150 Hz ±1.0g	10–57 Hz ±0.075 mm 57–150 Hz ±1.0g
Mechanical shock resistance		15g/11 ms	15g/11 ms	15g/11 ms
Overvoltage category		II	II	II
Pollution degree		2	2	2
Degree of protection		IP20	IP20	IP20
Rated impulse withstand voltage (U_{imp})	V	850	850	850
Emitted interference		EN 61000-6-4, Class A	EN 61000-6-4, Class A	EN 61000-6-4, Class A
Interference immunity		EN 61000-6-2	EN 61000-6-2	EN 61000-6-2
Battery (lifespan)		Normally 5 years	Normally 5 years	Normally 5 years
Weight	kg	0.23	0.23	0.23
Terminals		Plug-in terminal block	Plug-in terminal block	Plug-in terminal block
Terminal capacity Screw terminals				
Flexible with ferrule	mm^2	0.5–1.5	0.5–1.5	0.5–1.5
Solid	mm^2	0.5–2.5	0.5–2.5	0.5–2.5
Spring-cage terminal				
Flexible	mm^2	0.34–1.0	0.34–1.0	0.34–1.0
Solid	mm^2	0.14–1.0	0.14–1.0	0.14–1.0
Electromagnetic Compatibility (EMC)			Refer to Page **V7-T4-27**	
Power Supply				
Duration of mains failure	ms	10	10	10
Repetition rate	s	1	1	1
Input voltage	Vdc	24	24	24
Permissible range	Vdc	20.4–28.8	20.4–28.8	20.4–28.8
Input power	W	Max. 33	Max. 33	Max. 33
Ripple	%	≤5	≤5	≤5
Maximum heat dissipation (P_v)	W	6	6	6
Overvoltage protection		Yes	Yes	Yes
Protection against polarity reversal		Yes	Yes	Yes
Line filter		Yes	Yes	Yes
Inrush current	x I_n		Not limited (limiting only by a supply-side 24 Vdc PSU)	
Output voltage for signal modules Rated value	Vdc	5	5	5
Output current	A	3.2	3.2	3.2
Short-circuit rating		Yes	Yes	Yes
Isolated from supply voltage		No	No	No
CPU				
Microprocessor		NEC VR4181 A MIPS	NEC VR4181 A MIPS	ARM 532 MHz
Memory				
Program code/program data		256 kByte/256 kByte	2 Mbyte/512 kByte	4 Mbyte/512 kByte
Marker/retain data	kByte	16/32	16/32	16/64
Cycle time for 1k of instructions (bits, bytes)	ms	<0.15	<0.15	<0.025

XC200 Series Modular PLCs, continued

Description	Unit	XC-CPU201-EC256K-8DI-6DO(-XV)	XC-CPU201-EC512K-8DI-6DO(-XV)	XC-CPU202-EC4M-8DI-6DO-XV
Interfaces				
Ethernet				
Baud rate	Mbit/s	10/100–Autodetect	10/100–Autodetect	10/100–Autodetect
Connector type		RJ45	RJ45	RJ45
Potential isolation		No	No	No
Serial interface (RS-232) without handshake lines				
Baud rate	kbit/s	Max. 115.2	Max. 115.2	Max. 115.2
Connector type		RJ45	RJ45	RJ45
Potential isolation		No	No	No
USB interface		1.0	1.0	2.0
CANopen				
Maximum data transfer rate	Mbit/s	1	1	1
Potential isolation		Yes	Yes	Yes
Device profile		To DS 301 V4	To DS 301 V4	To DS 301 V4
PDO type		Asyn., cyc., acyc.	Asyn., cyc., acyc.	Asyn., cyc., acyc.
Connection		Plug-in terminal block	Plug-in terminal block	Plug-in terminal block
Bus terminating resistors		External	External	Internal
Stations	Number	Max. 126	Max. 126	Max. 126
Watchdog		Yes	Yes	Yes
RTC (real-time clock)		Yes	Yes	Yes
Power Supply of Local Inputs/Outputs (24 V_Q/0 V_Q)				
Input voltage	Vdc	24	24	24
Voltage range	Vdc	19.2–30, observe polarity	19.2–30, observe polarity	19.2–30, observe polarity
Potential isolation				
Between power supply and CPU voltage		Yes	Yes	Yes
Between power supply and inputs/outputs		No	No	No
Status indication		LED	LED	LED
Terminals		Plug-in terminal block	Plug-in terminal block	Plug-in terminal block
Overvoltage protection		Yes	Yes	Yes
Protection against polarity reversal		Yes	Yes	Yes
Digital Inputs				
Input current per channel at rated voltage	mA	Normally 3.5	Normally 3.5	Normally 3.5
Heat dissipation per channel		Normally 85m W	Normally 85m W	Normally 85m W
Voltage level to IEC/EN 61131-2				
Limit value type 1		Low <5 Vdc/High >15 Vdc	Low <5 Vdc/High >15 Vdc	Low <5 Vdc/High >15 Vdc
Input delay				
OFF ⟶ ON	ms	Type 0.1	Type 0.1	Type 0.1
ON ⟶ OFF	ms	Type 0.1	Type 0.1	Type 0.1
Inputs	Number	8, of which parameterizable: 2 counters, 50 kHz, 2 interrupt inputs, 1 incremental input		
Channels with the same reference potential	Number	8	8	8
Status indication		LED	LED	LED
Digital Outputs				
Channels	Number	6	6	6
Heat dissipation per channel	W	0.08	0.08	0.08
Load circuits	A	0.5	0.5	0.5
Output delay				
OFF ⟶ ON		Normally 0.1 ms	Normally 0.1 ms	Normally 0.1 ms
ON ⟶ OFF		Normally 0.1 ms	Normally 0.1 ms	Normally 0.1 ms
Channels with the same reference potential	Number	6	6	6
Status indication		LED	LED	LED
Switching capacity		IEC/EN 60947-5-1, utilization category DC-13		
Duty factor	% DF	100	100	100
Utilization factor	g	1	1	1

XIOC Digital Input Modules

Description	Unit	XIOC-8DI	XIOC-16DI	XIOC-32DI
Modules				
Input type		DC input	DC input	DC input
Input voltage	Vdc	24	24	24
Permissible range	Vdc	20.4–28.8	20.4–28.8	20.4–28.8
Input voltage	Vac	—	—	—
Permissible range	Vac	—	—	—
Input resistance		Normally 3.5 kohm	Normally 5.9 kohm	Normally 5.6 kohm
Input current	mA	Normally 6.9	Normally 4.0	Normally 4.3
Voltage level to IEC 61131-2, limit value type 1				
ON	Vdc	≥15	≥15	≥15
OFF	Vdc	≤5	≤5	≤5
Input delay				
OFF ⟶ ON	ms	5 (normally 4)	5 (normally 4)	5 (normally 4)
OFF ⟶ ON	ms	5 (normally 4)	5 (normally 4)	5 (normally 4)
Input channels	Number	8	16	32
Channels with the same reference potential	Number	8	16	32
Potential isolation		With optocouplers	With optocouplers	With optocouplers
Indication		LED (green)	LED (green)	16 LEDs (green), switchable: 0–15, 16–31
Terminals		Plug-in terminal block	Plug-in terminal block	XIOC-TERM32 (connector and cable)
Internal current consumption (5 Vdc)	mA	Normally 26	Normally 51	Normally 100
Weight	kg	0.16	0.16	0.16

XIOC Digital Output Modules

Description	Unit	XIOC-8DO	XIOC-16DO	XIOC-16DO-S	XIOC-32DO
Modules					
Output type		Transistor (source type)	Transistor (source type)	Transistor (source type)	Transistor (source type)
Output voltage	Vdc	24 (–15 to +20%)	24 (–15 to +20%)	24 (–15 to +20%)	24 (–15 to +20%)
Switching current, minimum	mA	1	1	1	1
Leakage current	mA	0.1	0.1	0.1	0.1
Maximum load current					
Per circuit	A	0.3	0.3	0.8	0.2
Per common potential terminal	A	2.4	4	5	3.2
Output delay					
OFF ⟶ ON	ms	≤0.3	≤0.3	≤0.3	≤0.3
OFF ⟶ ON	ms	≤1	≤1	≤1	≤1
Output channels	Number	8	16	16	32
Channels with the same reference potential	Number	8	16	16	32
Overvoltage protection		Diode	Diode	Integrated	Diode
Fuse rating	A	4	8	None	8
Potential isolation		With optocouplers	With optocouplers	With optocouplers	With optocouplers
Indication		LED (green)	LED (green)	LED (green)	16 LEDs (green) switchable: 0–15, 16–31
Terminals		Plug-in terminal block	Plug-in terminal block	Plug-in terminal block	XIOC-TERM32 (connector and cable)
Internal current consumption (5 Vdc)	mA	Normally 30	Normally 50	Normally 50	Normally 250
External voltage for outputs/module (30 mA for module supply) (U_s)	Vdc	24 (–15 to +20%)	24 (–15 to +20%)	24 (–15 to +20%)	24 (–15 to +20%)
Short-circuit protection		—	—	Yes	—
Weight	kg	0.16	0.16	0.16	0.16

XIOC Relay Output Module

Description	Unit	XIOC-12DO-R
Modules		
Output type		Relays
Output voltage	Vdc	24
Output voltage	Vac	100/240
Switching current, minimum	mA	1
Maximum load current		
Per circuit	A	2
Per common potential terminal	A	5
Output delay		
OFF ⟶ ON	ms	≤10
OFF ⟶ ON	ms	≤10
Output channels	Number	12
Channels with the same reference potential	Number	12
Overvoltage protection		External
Fuse rating	A	External
Potential isolation		With optocouplers
Indication		LED (green)
Terminals		Plug-in terminal block
Internal current consumption (5 Vdc)	mA	Normally 40
External voltage for operating the relay		24 Vdc (–15 to +20%, max. 70 mA)
Weight	kg	0.2

XIOC Digital Input/Output Module

Description	Unit	XIOC-16DX
Power Supply		
Supply voltage		24 Vdc (–15 to +20%)
Ripple	%	≤5
Overvoltage protection		Yes
Protection against polarity reversal		Yes
Potential isolation		
Between power supply and I/O bus		Yes
Between power supply and I/O		No
Internal current consumption (5 Vdc)	mA	Normally 80
Channels	Number	16
Terminals		Plug-in terminal block
Status indication		LED
Inputs		
Input type		DC input
Input voltage	Vdc	24
Inputs	Number	4, 12, configurable
Input current	mA	Normally 4
Voltage level to IEC 61131-2, limit value type 1		
ON	Vdc	≥15
OFF	Vdc	≤5
Input delay		
OFF ⟶ ON	ms	Normally 0.1
OFF ⟶ ON	ms	Normally 0.1
Outputs		
Output type		Transistor (source type)
Output voltage	Vdc	12/24 –15 to +20%)
Output current	A	Normally 0.5
Outputs	Number	Max. 12, configurable
Short-circuit tripping current	A	Max. 1.2 over 3 ms for output
Lamp load	W	Max. 3
Drop-out delay (High ⟶ Low)	µs	Normally 100
Switching capacity		IEC/EN 60947-5-1, utilization category DC-13
Short-circuit rating		Yes
Parallel connection of outputs		In groups 0 – 3, 4 – 7, 8 – 11; Actuation of the outputs within a group only in the same program cycle
Number of outputs that can be switched in parallel		Max. 3
Total maximum current	A	2 for group
Weight	kg	0.16

XIOC Analog Modules

Description	Unit	XIOC-8AI-I2	XIOC-8AI-U1	XIOC-8AI-U2	XIOC-4T-PT
Modules					
Input voltage	Vdc	—	0 to 10	–10 to +10	—
Input current	mA	4–20	—	—	—
Resolution, digital	bit	12	12	12	15 bit with sign
Conversion time		≤5 ms	≤5 ms	≤5 ms	—
Total errors	%	≤ ± 1 (of full-scale value)	≤ ± 1 (of full-scale value)	≤ ± 1 (of full-scale value)	≤ ± 1 (of full-scale value)
Input resistance	kohm	—	100	100	—
Potential isolation					
Circuit within each channel		With optocouplers	With optocouplers	With optocouplers	With optocouplers
Between the input channels		No	No	No	No
Input channels	Number	8	8	8	4
Terminals		Plug-in terminal block	Plug-in terminal block	Plug-in terminal block	Plug-in terminal block
External power supply		24 Vdc (–15 to +20%), approx. 150 mA	24 Vdc (–15 to +20%), approx. 150 mA	24 Vdc (–15 to +20%), approx. 150 mA	24 Vdc (–15 to +20%), 100 mA
External resistance (R)	kohm	—	—	—	Max. 0.4, 4 channels
Connection type		2-core shielded cable (≤20m)	2-core shielded cable (≤20m)	2-core shielded cable (≤20m)	Shielded cable
Platinum RTD		—	—	—	PT100 (IEC 751), PT1000
Accuracy					
–20° to 40°C (PT100)	°C	—	—	—	±0.5
–50° to 400°C (PT100)	°C	—	—	—	±3
–50° to 400°C (PT1000)	°C	—	—	—	±6
Temperature measuring range		—	—	—	–20 to 40°/–50 to 400° (uninterrupted current: 2 mA)
Internal current consumption (5 Vdc)	mA	Normally 100	Normally 100	Normally 100	Max. 200
Additional function		—	—	—	Linearization
Fault detection					
–20° to 40°C		—	—	—	≤ –25°C or ≥ +45°C = resistance value 7FFFFhex
–50° to 400°C		—	—	—	≤ –60°C or ≥ +410°C = resistance value 7FFFFhex
Response to cable break or unused inputs		—	—	—	In these cases, the resistance value is 7FFFhex
Weight	kg	0.18	0.18	0.18	0.18

XIOC Thermocouple Module

Description	Unit	XIOC-4AI-T
Channels		
Number		4
Temperature measuring range	°C	Type K: –270 to 1370 Type J: –210 to 1200 Type B: 100 to 1800 Type N: –270 to 1300 Type E: –270 to 1000 Type R: –50 to 1760 Type T: –200 to 400
Voltage measurement	mV	–50 to 50 –100 to 100 –500 to 500 –1000 to 1000
Cold-junction compensation		Yes, built-in
Interference suppression		50 Hz, 60 Hz
Unit		0.1°C, 0.1 F
Resolution	bit	16
Total errors	%	±0.5 of measurement range
Conversion time		<1s
Temperature coefficient		<200 ppm/°C of measurement range

XIOC Analog Modules

Description	Unit	XIOC-2AO-U1-2AO-I2	XIOC-4AO-U1	XIOC-2AO-U2
Modules				
Output voltage	Vdc	0–10	0–10	–10 to 10
Output current	mA	4–20	—	—
Resolution	bit	12	12	12
Conversion time		≤5 ms	≤5 ms	≤5 ms
Total errors	%	≤±1 (of full-scale value)	≤±1 (of full-scale value)	≤±1 (of full-scale value)
External load resistance				
Voltage output		≥10 kohm	≥10 kohm	≥10 kohm
Current output	ohm	0 to 500 ohm	—	—
Potential isolation				
Circuit within each channel		With optocouplers		
Between channels		No	No	No
Number of outputs				
Output voltage		2 (channels 0 and 1)	4	2
Output current		2 (channels 2 and 3)	—	—
Terminals		Plug-in terminal block	Plug-in terminal block	Plug-in terminal block
Internal current consumption (5 Vdc)	mA	Normally 100	Normally 100	Normally 100
External power supply		24 Vdc (–15/+20%), approx. 150 mA	24 Vdc (–15/+20%), approx. 150 mA	24 Vdc (–15/+20%), approx. 150 mA
Connection type		2-core shielded cable (≤20m)	2-core shielded cable (≤20m)	2-core shielded cable (≤20m)

XIOC Analog Modules

Description	Unit	XIOC-2AI-1AO-U1	XIOC-2AI-1AO-U1-I1	XIOC-4AI-2AO-U1	XIOC-4AI-2AO-U1-I1
Inputs					
Input voltage	Vdc	0–10	0–10	0–10	0–10
Input current	mA	—	0–20	—	0–20
Resolution	bit	14	14	14	14
Conversion time		<1 ms	<1 ms	<1 ms	<1 ms
Total errors	%	Normally 0.4	Normally 0.4	Normally 0.4	Normally 0.4
Potential isolation					
Circuit within each channel		No	No	No	No
Between the input channels		No	No	No	No
Between input/output channels		No	No	No	No
Channels	Number	2	2	4	4
Input resistance	kohm	40	40	40	40
Outputs					
Output voltage	Vdc	0–10	0–10	0–10	0–10
Output current	mA	—	0–20	—	0–20
Resolution	bit	12	12	12	12
Errors		Normally 0.4%	Normally 0.4%	Normally 0.4%	Normally 0.4%
Potential isolation					
Circuit within each channel		No	No	No	No
Between the output channels		No	No	No	No
Number of channels		1	1	2	2
External load resistance		≥2 kohm	≥2 kohm	≥2 kohm	≥2 kohm
Short-circuit rating		Yes	Yes	Yes	Yes
Terminal Connection					
Terminals		Plug-in terminal block	Plug-in terminal block	Plug-in terminal block	Plug-in terminal block
Internal current consumption (5 Vdc)	mA	Normally 200	Normally 200	Normally 200	Normally 200
Weight	kg	0.16	0.16	0.16	0.16

XIOC Communication Modules

Description	Unit	XIOC-NET-DP-M	XIOC-NET-DP-S	XIOC-SER	XIOC-TC1
Interfaces					
Interfaces		PROFIBUS-DP, RS-485, EN 50170	PROFIBUS-DP, RS-485, EN 50170	RS-232(C), RS-422, RS-485	RS-232(C), RS-422, RS-485
Protocol		PROFIBUS-DP master (class 1)	PROFIBUS-DP slave	Transparent mode, Modbus master/slave	Transparent mode, Modbus master/slave, DNP3 protocol
Character formats		—	—	8E1, 8O1, 8N1, 8N2, 7E2, 7O2, 7N2, 7E1	8E1, 8O1, 8N1, 8N2, 7E2, 7O2, 7N2, 7E1
Control and signal cables		—	—	RTS, CTS, DTR, DSR, DCD	RTS, CTS, DTR, DSR, DCD
Transfer rate	kbit/s	9.6 to 12,000	9.6 to 12,000	0.3 –57.6	0.3–57.6
Potential isolation		Yes	Yes	Yes (RS-485, RS-422)	Yes (RS-485, RS-422)
Number of slaves		124	—	—	—
Send/receive data		3500 Byte each	Max. 244 Byte	250 Byte per slave 120 Byte per slave	250/500
Bus terminating resistors		Switchable	Switchable	Switchable for RS-485, RS-422	Switchable for RS-485, RS-422
Connector type		D-sub 9-pin socket	D-sub 9-pin socket	RS-232: D-sub 9-pin RS-485, 422: plug-in terminal block	RS-232: D-sub 9-pin RS-485, 422: plug-in terminal block
Current consumption	mA	<300	<300	<275	<275
Weight	kg	Approx. 0.2	Approx. 0.2	Approx. 0.2	Approx. 0.2
Number of modules		XC100: 1/XC200: 3	XC100: 1/XC200: 3	XC100: 2/XC200: 4	XC200: 4
Slots		1, 2, 3	1, 2, 3	Any	Any

XIOC Counter Modules

Description	Unit	XIOC-1CNT-100KHZ	XIOC-2CNT-100KHZ	XIOC-2CNT-2AO-INC
Inputs				
Counter limits		0–4294967295 (32 bit)	0–4294967295 (32 bit)	0–4294967295 (32 bit)
Internal current consumption	mA	200	200	450
Frequency	kHz	100 (25 with four times resolution)	100 (25 with four times resolution)	400 (100 with four times resolution)
Number of channels		1	2	2
Input voltage	Vdc	12–24	12–24	—
Voltage for ON	Vdc	>10	>10	—
Voltage for OFF	VA/W	<4	<4	—
Input current	mA	≥4	≥4	—
Differential input voltage	Vdc	±5	±5	±5
Voltage for ON	Vdc	2–5	2–5	0.2–5
Voltage for OFF	Vdc	–5 to 8	–5 to 8	–5 to –0.2
Differential input current	mA	35	35	5
Minimum pulse width	µs	ON ≥4/OFF ≥4	ON ≥4/OFF ≥4	—
Potential isolation		With optocouplers	With optocouplers	—
Connection for external cabling		30-pin plug: XIOC-TERM30-CNT4	30-pin plug: XIOC-TERM30-CNT4	Plug-in terminal block
External cabling		Shielded, twisted pair cable	Shielded, twisted pair cable	Shielded, twisted pair cable
Outputs				
Output type		Transistor (open collector)	Transistor (open collector)	Analog
External power supply		12/24 Vdc (30 max.)	12/24 Vdc (30 max.)	—
Minimum load current	mA	1	1	—
Maximum load current (I_e)	mA	20	20	—
Max. leakage current	mA	0.5	0.5	—
Max. voltage drop at ON	V	1.5	1.5	—
Debounce OFF				
OFF ⟶ ON	ms	≤1	≤1	—
OFF ⟶ ON	ms	≤1	≤1	—
Output channels	Number	2	4	2
Potential isolation		With optocouplers	With optocouplers	—
Output voltage	Vdc	—	—	–10 to 10
Resolution	bit	—	—	12
Conversion time		—	—	≤1 ms
Total errors	%	—	—	Normally 0.4
Load resistance		—	—	≥1 kohm
Connection for external cabling		30-pin plug: XIOC-TERM30-CNT4	30-pin plug: XIOC-TERM30-CNT4	Plug-in terminal block
External cabling		Shielded, twisted pair cable	Shielded, twisted pair cable	Shielded 2-core cable
Current per channel	mA	—	—	≤300
Power supply of encoders		—	—	5 Vdc
Current consumption	mA	200	200	Max. 450
Weight	kg	0.16	0.16	0.18

Power Supply Suppression Filters

Description	Unit	XT-FIL-1	XT-FIL-2
General			
Standards		IEC/EN 61131-2; EN 50178	IEC/EN 61131-2; EN 50178
Ambient temperature	°F (°C)	32° to 131° (0° to 55°)	32° to 131° (0° to 55°)
Storage	°F (°C)	–13° to 158° (–25° to 70°)	–13° to 158° (–25° to 70°)
Mounting position		Vertical or horizontal	Vertical or horizontal
Vibration resistance		10–57 Hz ± 0.075 mm 57–150 Hz ± 1.0g	10–57 Hz ± 0.075 mm 57–150 Hz ± 1.0g
Mechanical shock resistance		15g/11 ms	15g/11 ms
Impact strength		500g /50 mm ±25g	500g/50 mm ±25g
Overvoltage category		II	II
Pollution degree		2	2
Protection type		IP20	IP20
Rated impulse withstand voltage (U_{imp})	V	850	850
Interference immunity		EN 61000-6-2	EN 61000-6-2
Weight	kg	0.1	0.1
Dimensions (W x H x D)	mm	35 x 90 x 30	35 x 90 x 57
Terminals		Screw terminals	Screw terminals
Terminal capacity Screw terminals			
Flexible with ferrule	mm^2	0.2–2.5 (AWG22–12)	0.2–2.5 (AWG22–12)
Solid	mm^2	0.2–2.5 (AWG22–12)	0.2–2.5 (AWG22–12)
Power Supply			
Input voltage	Vdc	24	24
Permissible range	Vdc	20.4–28.8	20.4–28.8
Ripple	%	≤5	≤5
Mains overvoltage protection		Yes	Yes
Potential isolation			
Between input voltage and PE		Yes	Yes
Between input voltage and output voltage		No	No
Between output voltage and PE		Yes	Yes
Rated value	Vdc	24	24
Output current	A	2.2	12

General Information on Electromagnetic Compatibility (EMC) of Automation Systems

Description	Specification			
Emitted interference	EN 55011/22 Class A (VDE 0875, Part 11)			
Interference immunity				
ESD	IEC/EN 61000-4-2	Contact discharge: 4 kV Air discharge 8 kV		
RFI	IEC/EN 61000-4-3	AM (80%)	80–1000 MHz	10V/m
Mobile phones/cellphones	IEC/EN 61000-4-3	PM	800–960 MHz	10V/m
Burst	IEC/EN 61000-4-4	Mains/digital I/O (direct): 2 kV Analog I/O, fieldbus (capacitive coupling): 1 kV		
Surge	IEC/EN 61000-4-5	Digital I/O, asymmetric, analog I/O, asymmetric, connection to shielding: 0.5 kV Mains DC, asymmetric: 1 kV Mains DC, symmetric: 1 kV Mains AC, asymmetric: 0.5 kV Mains AC, symmetric: 2 kV		
Conducted interference, induced by high-frequency fields	IEC/EN 61000-4-6; 2003	AM (80%)	150 kHz–80 MHz	3V

Dimensions

Approximate Dimensions in Inches (mm)

XC-CPU101, XC-CPU201, XC-CPU202

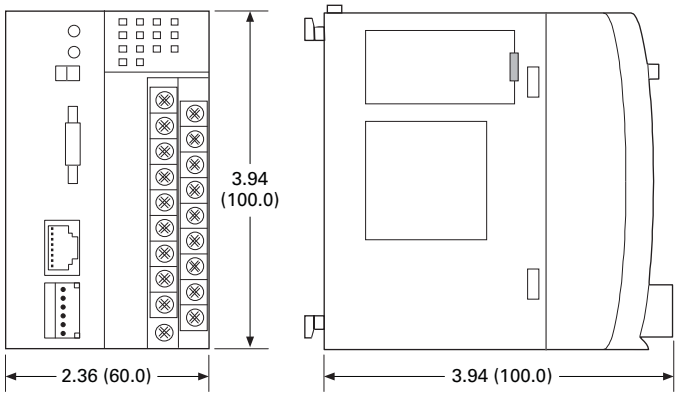

XIOC_

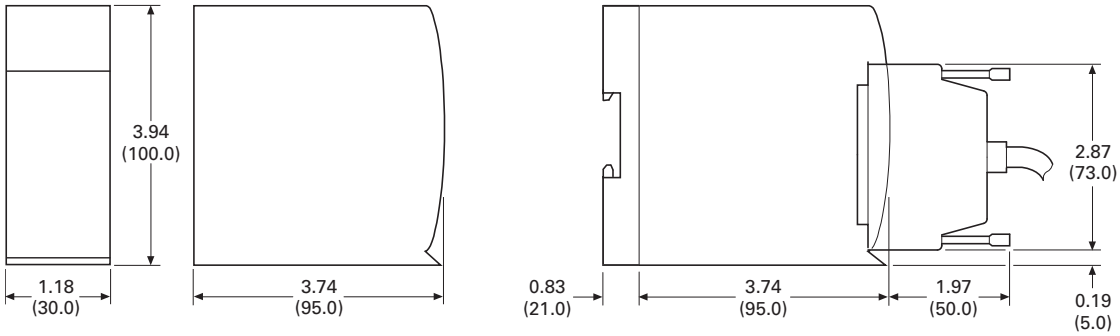

Backplates

XIOC-BP-2 **XIOC-BP-3** **XIOC-BP-XC1**
XIOC-BP-XC **XIOC-BP-EXT**

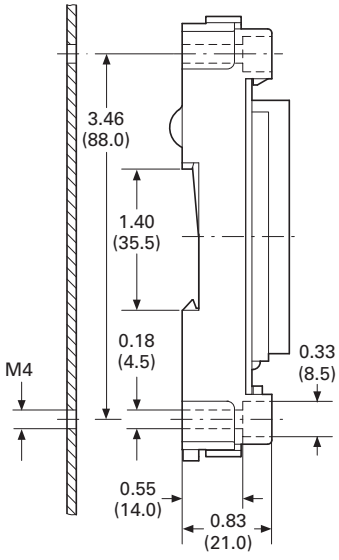

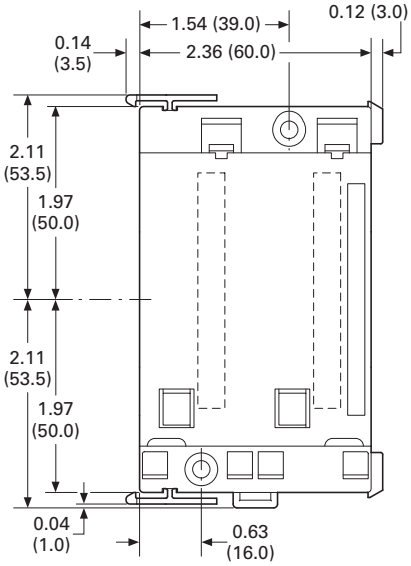

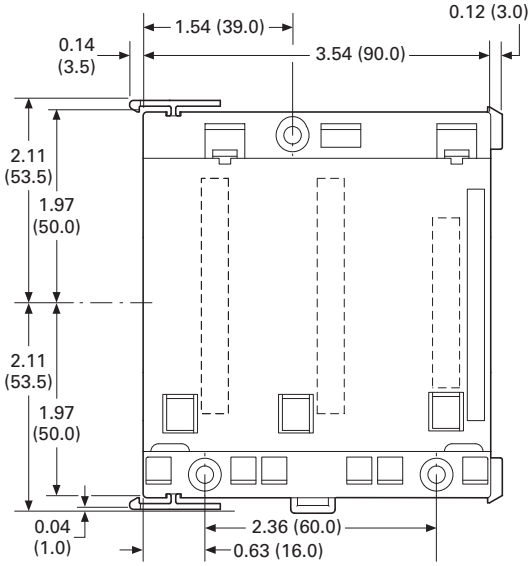

Approximate Dimensions in Inches (mm)

XC-CPU-121_, XIO-EXT121-1

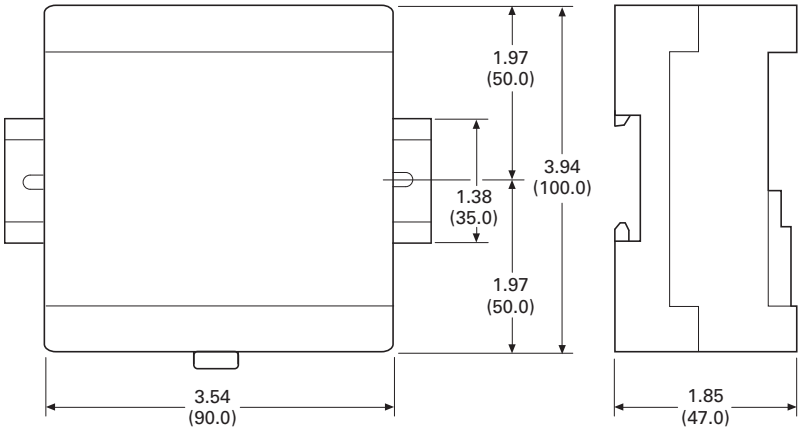

XT-RJ45-ETH-RS232

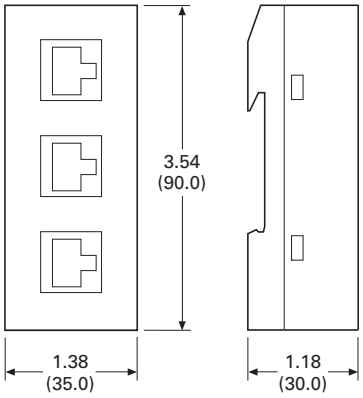

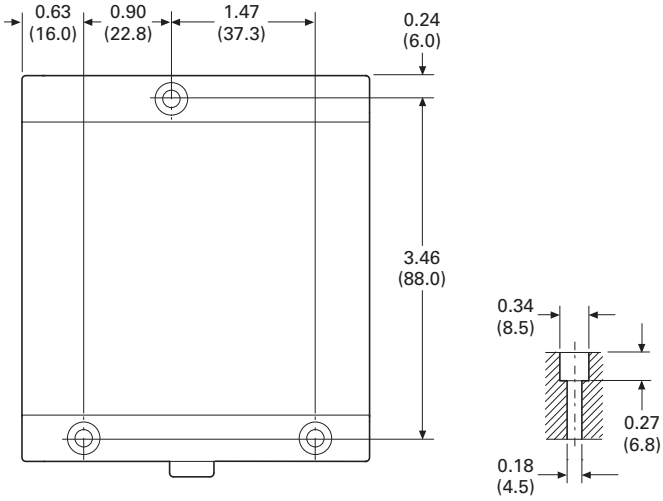

XC152 Series Programmable Logic Controllers

Contents

Description	*Page*
XC152 Series Programmable Logic Controllers	
Catalog Number Selection	**V7-T4-31**
Product Selection	**V7-T4-31**
Accessories	**V7-T4-31**
Technical Data and Specifications	**V7-T4-32**
Dimensions	**V7-T4-33**

Product Description

The XC152 compact PLC combines plenty of processing power with a large number of communication interfaces. This makes the device particularly well-suited to standardized automation solutions in modular machine building applications.

The XC152 not only provides machine segment control functions that can be programmed with CoDeSys, but it can store module-specific visualizations. These visualizations can be retrieved and displayed on a central HMI or a computer as needed.

In addition, the XC152 connects SmartWire-DT systems to standard fieldbus systems via its interfaces. This enables the XC152 PLC to support Eaton's Lean Automation strategy while enabling users to design automation systems in a flexible manner and run them cost-effectively.

Application Description

Flexible Solutions for Modular Machine Units

In the field of automation, complex processes are subdivided into easily manageable functional units to make programming, production and installation easier. For example, a packaging machine can be subdivided into infeed, positioning (erector), filling and sealing (gluing) modules. Other systems and machines can also be effectively subdivided to create a wide variety of different models or to delimit various expansion stages.

With the XC152, a powerful PLC controls individual system modules while making it possible to directly connect SmartWire-DT system devices and standard fieldbus components. Data transfers via the Ethernet interface to OPC clients, together with the available remote visualization system, support a connection to a central control and visualization system.

SmartWire-DT

The XC152 relies on Eaton's tried-and-true SmartWire-DT connection system, eliminating the need for control current wiring in every single machine module and simplifying the commissioning process by means of better diagnostic options. This results in significant design, commissioning and maintenance cost reductions.

Standard CAN and PROFIBUS Fieldbus Systems

Servo drives, frequency inverters and hydraulic components can all be easily connected using the large number of fieldbus interfaces available on the XC152.

Visualization

The integrated Web visualization function offers a key advantage, as machine module diagnostic and visualization information can be displayed on a central HMI or a terminal.

Features and Benefits

- CoDeSys PLC and Web visualization
- Galileo/CoDeSys remote visualization
- Ethernet port on all models
- Windows® CE 5 operating system
- 32-bit RISC CPU at 400 MHz
- 64 MB internal memory
- SD card slot for external memory
- Run/Stop switch
- Optional: Integrated SmartWire-DT master for 99 nodes
- Optional: RS-232, RS-485, PROFIBUS-DP/MPI, CANopen/easyNet

Standards and Certifications

- IEC/EN 61131-2, EN 50178
- EN 61000-6-2, EN 61000-6-4
- cULus
- CE

Catalog Number Selection

XC152 PLCs with and without SmartWire-DT

XC-152 – E6 – 11

Family
XC-152 = Windows CE OS CoDeSys firmware

Mounting
11 = DIN rail or panel mount

Features Base Unit Variant	Features Additional COMM Options
D = Ethernet, RS-485 and USB host **E** = SmartWire-DT, Ethernet and USB host	**3** = None **6** = 1-CANopen **8** = 1-PROFIBUS-DP

Product Selection

XC152 PLC

XC152 PLC

CoDeSys Firmware	Fieldbus Type	RS-232	RS-485	Ethernet	Catalog Number
Yes	CANopen	Yes	Yes	Yes	**XC-152-D6-11**
Yes	PROFIBUS-DP	Yes	Yes	Yes	**XC-152-D8-11**

XC152 PLC SmartWire-DT

XC152 PLC SmartWire-DT

CoDeSys Firmware	Fieldbus Type	RS-232	RS-485	Ethernet	SmartWire-DT	Catalog Number
Yes	None	Y	None	Yes	Yes	**XC-152-E3-11**
Yes	CANopen	None	Yes	Yes	Yes	**XC-152-E6-11**
Yes	PROFIBUS-DP	None	Yes	Yes	Yes	**XC-152-E8-11**

Accessories

XC PLC Accessories

Description	Catalog Number
PLC programming software, single seat license	**SW-XSOFT-CODESYS-2-S**
PLC programming software, multiple seat license	**SW-XSOFT-CODESYS-2-M**
SD memory card	**MEMORY-SD-A1-S**

Technical Data and Specifications

XC152 Series Programmable Logic Controllers

Description	Unit	XC-152-D6-11	XC-152-D8-11	XC-152-E3-11	XC-152-E6-11	XC-152-E8-11
System						
Processor		RISC, 32 bit at 400 MHz	RISC, 32 bit at 400 MHz	RISC, 32 bit at 400 MHz	RISC, 32 bit at 400 MHz	RISC, 32 bit at 400 MHz
Internal memory						
DRAM (OS-, program and data memory)	Mbyte	64	64	64	64	64
NAND FLASH (can be used for data security)	Mbyte	Approx. 128 available	Approx. 128 available	Approx. 128 available	Approx. 128 available	Approx. 128 available
NVRAM (retain)	kByte	Approx. 32 available	Approx. 32 available	Approx. 32 available	Approx. 32 available	Approx. 32 available
External memory						
SD memory card slot		SDA Specification 1.00	SDA Specification 1.00	SDA Specification 1.00	SDA Specification 1.00	SDA Specification 1.00
Real-time clock (battery backup)						
Battery (not rechargeable)		Zero maintenance	Zero maintenance	Zero maintenance	Zero maintenance	Zero maintenance
Backup time at zero voltage		Normally 10 years	Normally 10 years	Normally 10 years	Normally 10 years	Normally 10 years
Operating system		Windows CE 5	Windows CE 5	Windows CE 5	Windows CE 5	Windows CE 5
Engineering						
PLC-Programming software		CoDeSys 2/3	CoDeSys 2/3	CoDeSys 2/3	CoDeSys 2/3	CoDeSys 2/3
Visualization						
WEB-VISU		CoDeSys	CoDeSys	CoDeSys	CoDeSys	CoDeSys
Remote Client		Galileo/CoDeSys	Galileo/CoDeSys	Galileo/CoDeSys	Galileo/CoDeSys	Galileo/CoDeSys
Communication Interfaces						
Ethernet		100Base-TX/10Base-T	100Base-TX/10Base-T	100Base-TX/10Base-T	100Base-TX/10Base-T	100Base-TX/10Base-T
USB host ①		—	—	—	—	—
USB device ①		USB 2.0	USB 2.0	USB 2.0	USB 2.0	USB 2.0
System port (RS-232) ①		■	■	■	—	—
SmartWire-DT ①		—	—	■	■	■
CAN ①		■	—	—	■	—
PROFIBUS/MP ①		—	■	—	—	■
RS-485 ①		■	■	—	■	■
General						
Rated operating voltage		24 Vdc SELV	24 Vdc SELV	24 Vdc SELV	24 Vdc SELV	24 Vdc SELV
Power consumption	W	Max. 5	Max. 5	Max. 5	Max. 5	Max. 5
Protect against polarity reversal		Yes	Yes	Yes	Yes	Yes
Approvals		CE, cULus	CE, cULus	CE, cULus	CE, cULus	CE, cULus
Ambient air temperature	°C	0 to 55	0 to 55	0 to 55	0 to 55	0 to 55
Storage temperature	°C	–40 to +70	–40 to +70	–40 to +70	–40 to +70	–40 to +70
Protection type		IP20	IP20	IP20	IP20	IP20
Flush mounting		DIN rail EN 60715, 35 mm	DIN rail EN 60715, 35 mm	DIN rail EN 60715, 35 mm	DIN rail EN 60715, 35 mm	DIN rail EN 60715, 35 mm
Dimensions (H x W x D)	mm	105 x 155 x 40	105 x 155 x 40	105 x 155 x 40	105 x 155 x 40	105 x 155 x 40
Weight (approximate)	kg	0.3	0.3	0.3	0.3	0.3
Applied standards and directives						
Product standard		IEC/EN 61131-2, EN50178	IEC/EN 61131-2, EN50178	IEC/EN 61131-2, EN50178	IEC/EN 61131-2, EN50178	IEC/EN 61131-2, EN50178
EMC		EN 61000-6-2, EN 61000-6-4	EN 61000-6-2, EN 61000-6-4	EN 61000-6-2, EN 61000-6-4	EN 61000-6-2, EN 61000-6-4	EN 61000-6-2, EN 61000-6-4

Note

① Interface not galvanically isolated.

Dimensions

Approximate Dimensions in Inches (mm)

XC152 Series Programmable Logic Controllers

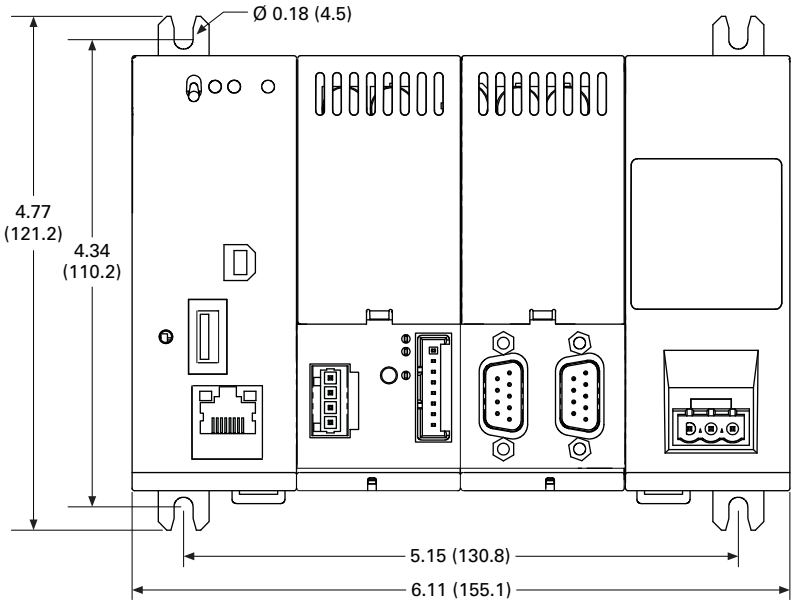

With Fixing Brackets

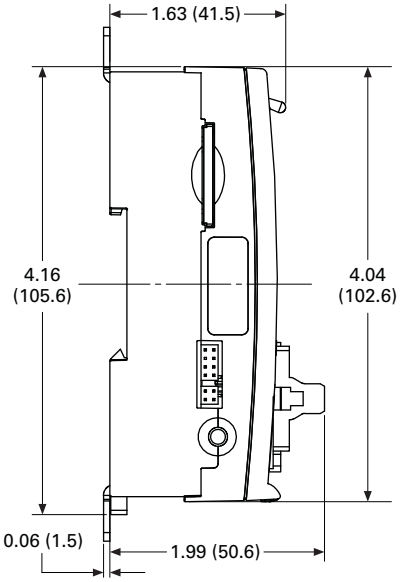

Without Fixing Brackets

XN300 Series Remote I/O

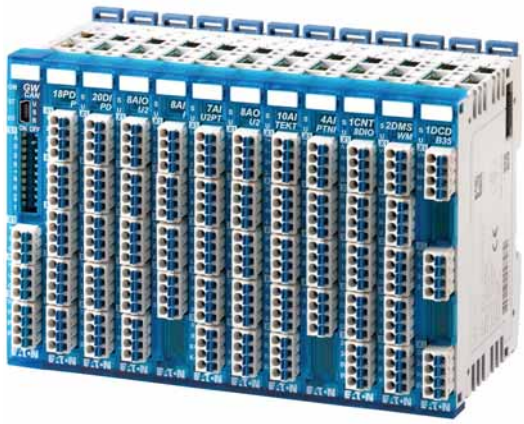

Contents

Description	*Page*
XN300 Series Remote I/O	
Product Selection	**V7-T4-35**

Product Description

The XN300 family of slice I/O modules offers the highest density I/O available on the market today. With a very cost-effective price per I/O point, it meets the needs of machinery OEMs for high-speed, low-cost and compact I/O systems. The CANopen Gateway provides a remote I/O connection that can connect to all Eaton XC PLCs and XV HMI-PLCs as well as many third-party PLCs. The tool-less assembly saves time in connecting modules on a DIN rail and the PUSH-IN technology makes wiring up the I/O a breeze. Status LEDs on all I/O points make it easy to quickly identify any wiring errors and to determine current signal conditions. The free XN300 Assist programming tool helps you to generate and check the I/O configuration and produce both electronic documentation and EDS files to simplify PLC configuration of XN300 I/O.

Coupled with the new XV300 HMI-PLC, the XN300 I/O products provide a high-powered low-cost system solution for MOEMs. Bundled with Visual Designer and CoDeSys 3 on an XV300 HMI-PLC, you get the smallest, most cost-effective and powerful HMI-PLC and SCADA system available on the market. This industry-leading combination of compact I/O solutions and HMI-PLCs can significantly reduce the overall control panel size, helping MOEMs in the never-ending quest to reduce the size and cost of their machinery.

Features

- Efficient—a wide range of discrete and analog input and output modules along with specialty modules focused on solving application needs
- Compact—up to 20 channels per slice (12.5 x 102 mm) helps reduce installation space and cost
- Simple—tool-free assembly with PUSH-IN & plug connection, with simple dismounting of plug connectors
- Fast identification of errors and signal conditions via LED status displays for all points
- Application specific, free, programmable module status LED
- CANopen Gateway connects up to 32 slices per block to connect I/O to both Eaton PLCs and HMI-PLCs and many third-party PLCs. Mini USB port to connect to XN300 Assist
- XN300 Assist software tool to generate electronic documentation and EDS files for PLC configuration

Standards and Certifications

- CE Mark
- UL/cUL
- RoHS

RoHS COMPLIANT

Listed

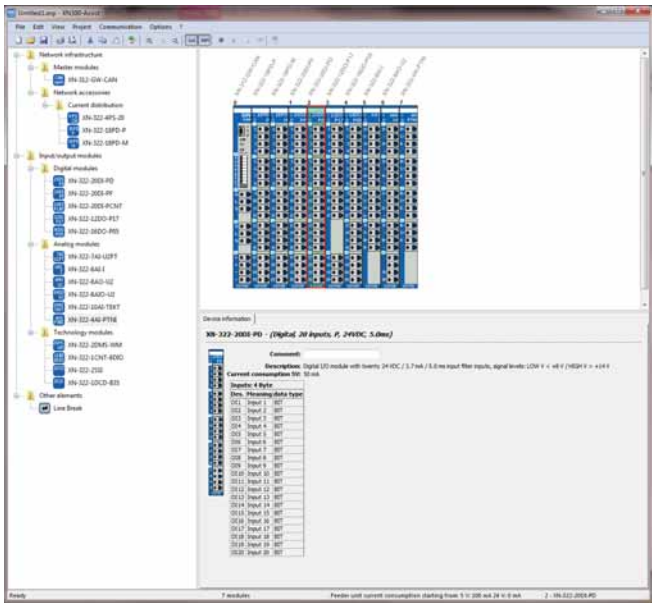

Product Selection

XN-322_

XN300 Series Remote I/O

Description	Style Number	Catalog Number
Digital Inputs		
Digital, 20 input, P, 24 Vdc, 5.0 ms	178786	**XN-322-20DI-PD**
Digital, 20 input, P, 24 Vdc, 0.5 ms	178768	**XN-322-20DI-PF**
Digital, 20 input, P, 24 Vdc, 2/4 cnt, 25 kHz	178767	**XN-322-20DI-PCNT**
Counters		
Counter, 1 cnt, 125 kHz, 16 bit, 4 DO, 4 DI	178795	**XN-322-1CNT-8DIO**
Digital Outputs		
Digital,16 output, P, 24 Vdc, 0.5 A, sp	178787	**XN-322-16DO-P05**
Digital,12 output, P, 24 Vdc, 1.7 A, sp	178788	**XN-322-12DO-P17**
Analog		
Analog, 6 input, ±10 V, 1 PT/KTY, U_{ref}	178789	**XN-322-7AI-U2PT**
Analog, 8 input, 0/4–20 mA	179288	**XN-322-8AI-I**
Analog, 8 input, thermo element, 2 KTY	178792	**XN-322-10AI-TEKT**
Analog, 4 input, PT/NI/KTY/R, 2/3 wire	178772	**XN-322-4AI-PTNI**
Analog, 8 output, ±10 V	178790	**XN-322-8AO-U2**
Analog, 4 In-/4 output, ±10 V, U_{ref}	178791	**XN-322-8AIO-U2**
Specialty		
Weigh module, 2 DMS, 24 bit	178793	**XN-322-2DMS-WM**
DC-motor driver, 12–30 V, brush, 3.5 A	178794	**XN-322-1DCD-B35**
Power		
Power supply, 4 x 24 Vdc / 2 A, sp	178796	**XN-322-4PS-20**
Power distribution, 18 channel, GND	178769	**XN-322-18PD-M**
Power distribution, 18 channel, VCC	178770	**XN-322-18PD-P**
Serial and SSI		
Serial, 2 SSI, RS-422, 32 bit	178773	**XN-322-2SSI**
Gateways		
CANopen Gateway module (supports 32 slices)	178782	**XN-312-GW-CAN**

Operator Interface Products

XV-100 Operator Interface

XV-300 Operator Interface

XP-500 Operator Interface

5.1 Product Overview

Product and Software Selection Guides V7-T5-2

5.2 XV-100 Operator Interface

Product Description V7-T5-8
Features V7-T5-8
Standards and Certifications V7-T5-8
Catalog Number Selection V7-T5-9
Product Selection V7-T5-9
Accessories V7-T5-10
Technical Data and Specifications V7-T5-11

5.3 XV-300 Operator Interface

Product Description V7-T5-12
Features V7-T5-12
Standards and Certifications V7-T5-12
Catalog Number Selection V7-T5-13
Product Selection V7-T5-14
Accessories V7-T5-15
Technical Data and Specifications V7-T5-16

5.4 XP-500 Operator Interface

Product Description V7-T5-17
Features V7-T5-17
Standards and Certifications V7-T5-17
Catalog Number Selection V7-T5-18
Product Selection V7-T5-18
Accessories V7-T5-18
Technical Data and Specifications V7-T5-19

5.5 Operator Interface Software

Galileo Software V7-T5-20
XSoft-CoDeSys-3 Software V7-T5-21
Visual Designer Software V7-T5-22

Learn Online

Product and Software Selection Guides

Operator Interfaces and Programming Software Selection Guide

Description	XV-100 Operator Interface	XV-300 Operator Interface	XP-500 Series Operator Interface
	Page V7-T5-8	**Page V7-T5-12**	**Page V7-T5-17**
Screen size	3.5-inch, 5.7-inch, 7.0-inch, 8.4-inch and 10.4-inch	7.0-inch, 10.1-inch, 15-inch	10.1-inch, 15.6-inch, 21.5-inch
Screen options	Color TFT, 64 k colors; resolutions from QVGA (320 x 240) to WVGA (800 x 480)	LED backlit Projected Capacitive Touch (PCT), resolutions from (1024 x 600) to (1366 x 768)	LED backlit Projected Capacitive Touchscreen (PCT), resolutions from (1024 x 600) to (1920 x 1080)
Interface	Resistive touchscreen	Non-reflective tempered scratch-resistant glass	Non-reflective tempered scratch-resistant glass
Communication ports	Ethernet, RS-232 and/or RS-485, USB; CANopen or PROFIBUS®-DP, SmartWire-DT®, USB and RS-485 on CoDeSys models	Ethernet, RS-232 and/or RS-485, USB; CANopen or PROFIBUS-DP, SmartWire-DT, USB and RS-485 on CoDeSys models	2 Ethernet, 1 RS-232, 1 RS-485, 2 USB 3.0, 1 DVI-I
Simultaneous protocols	Varies	3 on Visual Designer, varies for Galileo and XSoft-CoDeSys-3	5 (8 optional)
Ethernet drivers	Yes	Yes	Yes
Upload/download	Serial, Ethernet, USB	Serial, Ethernet, USB	Serial, Ethernet, USB
Operating system	Windows CE 5.0 Professional	Windows CE 7	Windows® Embedded Standard 7 (protected)
Third-party software support	—	—	Yes
Screen saver	Yes	Yes	Yes

Product Selection Guide

XV Series with Galileo

Series Model Screen Size	XV Model XV-102-H 3.5, 5.7, 7.0	XV Model XV-303
Housing material	Plastic	Plastic
Operating system	WinCE 5.0 Standard	WinCE 7.0 Professional
Touchscreen	Resistive	Projected Capacitive Touchscreen (PCT)
Communications ports	1 Ethernet, 1 RS-232, or 1 RS-485, 1 USB	1 Ethernet, 1 RS-232, or 1 RS-485, 1 USB
Optional field buses	N/A	N/A
Development software	Galileo	Galileo
Alarm online/historical	Yes	Yes
Trend online/historical	Yes	Yes
Scripting	Structured text	Structured text
Scheduler	No	No
Recipe	Yes	Yes
Reports	No	No
Full remote access	Yes	Yes
Ability to run third-party software	No	No
Vision system interfaces	Yes	Yes
Multi-language support	Yes	Yes
PLC variable import	Yes	Yes

XV Series with CoDeSys Runtime (Not Available on XP Series)

Series Model Screen Size	XV XV-102 3.5, 5.7, 7.0	XV XV-152 5.7, 8.4, 10.4	XV-303 7.0, 10.1
Housing material	Plastic	Metal	Plastic
Operating system	WinCE 5.0 Standard	WinCE 5.0 Standard	WinCE 7.0 Professional
Touchscreen	Resistive	Resistive	PCT, ruggedized glass
Communications ports	1 Ethernet, 1 or 2 serial, 0 or 1 USB	1 Ethernet, 1 or 2 serial, 0 or 1 USB	1 Ethernet, 2 serial, 1 USB, CAN
Optional field buses	PROFIBUS, CANopen, SmartWire-DT	PROFIBUS, CANopen, SmartWire-DT	Optional Field Buses—2nd Ethernet, SmartWire-DT, PROFIBUS
Development software	XSoft-CoDeSys-3	XSoft-CoDeSys-3	XSoft-CoDeSys-3
IEC-61131-3 logic programming	(LD, ST, SFC, IL, FBD, CFC) Yes	(LD, ST, SFC, IL, FBD, CFC) Yes	(LD, ST, SFC, IL, FBD, CFC) Yes
Integrated screen design	Yes	Yes	Yes
Integrated field bus configuration	Yes	Yes	Yes
Alarm online/historical	Yes	Yes	Yes
Trend online/historical	Yes	Yes	Yes
Scripting	Structured Text	Structured Text	Structured Text (ST)
Scheduler	Yes	Yes	Yes
Recipe	Yes	Yes	No
Reports	No	No	Yes
OPC, TCP/IP and communication driver	Yes (OPC Server for PC)	Yes (OPC Server for PC)	Yes (OPC Server for PC)
Web Server and Web Thin Client support	Yes	Yes	Yes
Full remote access	Yes	Yes	Yes
Local/remote data base access	Limited (DDE)	Limited (DDE)	Yes (with Visual Designer software bundle)
Ability to run third-party software	No	No	No
ActiveX and .NET controls	No	No	No
Full document viewing	No	No	Yes (PDF and HTML)
Windows media player	No	No	No
Vision system interfaces	No	No	No
Network camera monitoring	No	No	No

XV Operator Interface with Visual Designer

Series	
Model	**XV-300**
Screen Size	**7.0, 10.1**
Housing material	Plastic
Operating system	WinCE 7.0 Professional
Touchscreen technology	PCT, ruggedized glass
Communication ports	1 Ethernet, 2 serial, 1 USB, CAN
Optional field buses	Optional Communication Ports—2nd Ethernet, SmartWire-DT, PROFIBUS-DP
Development software	Visual Designer
Pre-licensed tags, driver and Web session and field upgrade options	1500 tags, 3 drivers, 1 Web session Optional upgrade to 4000 tags, 3 drivers, 1, 2, 4 or 8 simultaneous Web sessions
Alarm online/history	Yes
Trend online/history	Yes
Scripting	Yes (VB Script)
Scheduler	Yes
Recipe	Yes
Reports	Yes
OPC, TCP/IP, and communication drivers	Yes
Web Server and Web Thin Client support	Yes
Full remote access	Yes
Local/remote database interface	Yes
Ability to run third-party software	No
ActiveX and .NET controls	No
Full document viewing	Yes (PDF and HTML)
Windows media player	No
Vision system interfaces	No
Network camera monitoring	No

XP Operator Interface with Galileo

Series	**XP**
Model	**XP-503**
Screen Size	**10.1, 15.6, 21.5**
Housing material	Powder-coated aluminum
Operating system	Windows Embedded Standard 7
Touchscreen technology	Projected Capacitive Touchscreen (PCT), non-reflective tempered glass
Communication ports	2 Ethernet, 2 serial, 4 USB 2 Ethernet; 1 RS-232; 1 RS-485; 2 USB 3.0
Optional field buses	N/A
Development software	Galileo
Alarm online/historical	Yes
Trend online/historical	Yes
Scripting	Structured text
Scheduler	No
Recipe	Yes
Reports	No
Full remote access	Yes
Ability to run third-party software	No
Vision system interfaces	Yes
Multi-language support	Yes
PLC variable import	Yes

XP Operator Interface with Visual Designer

Series	**XP**
Model	**XP-503**
Screen Size	**10.1, 15.6, 21.5**
Housing material	Powder-coated aluminum
Operating system	Windows Embedded Standard 7
Touchscreen technology	Projected Capacitive Touchscreen (PCT), non-reflective tempered glass
Communication ports	2 Ethernet, 2 serial, 4 USB 2 Ethernet; 1 RS-232; 1 RS-485; 2 USB 3.0
Optional field buses	N/A
Development software	Visual Designer (VISUALDXP) (Runtime pre-installed)
Pre-licensed tags, driver and Web session and field upgrade options	Standard 4000 tags, 5 drivers, 1 Web session Optional upgrades to 64,000 tags, 8 drivers, 1, 2, 4, 8, 16, 32, 64 or 128 simultaneous Web sessions
Alarm online/history	Yes
Trend online/history	Yes
Scripting	Yes (VB Script)
Scheduler	Yes
Recipe	Yes
Reports	Yes
OPC, TCP/IP, and communication drivers	Yes
Web Server and Web Thin Client support	Yes
Full remote access	Yes
Local/remote database interface	Yes
Ability to run third-party software	Yes
ActiveX and .NET controls	Yes
Full document viewing	Yes
Windows media player	Yes
Vision system interfaces	Yes
Network camera monitoring	Yes

Software Product Selection Guide

Description	Galileo	XSoft-CoDeSys-3 ①	Visual Designer
Overview	Intuitive visualization tool. Use Galileo on XV-102-H_ units or on XV units running CoDeSys when a stronger visualization package is needed	Feature-rich software package with integrated logic and visualization that can be run on specific XV operator interface models	Feature-rich software package with SCADA functionality and Web serving capabilities that can be run on XV, XP, ePro PS operator interfaces or personal computers
Catalog ID			
Development software seat license	SW-GALILEO-S SW-GALILEO-M	SW-XSOFT-CODESYS-3-S ② SW-XSOFT-CODESYS-3-M ③	VISUALDCE (CE hardware) VISUALDXP5 (5-pack of VISUALDXP) VISUALDCE5 (5-pack of VISUALDCE) VISUALDXP (PCs, XPe, and CE hardware)
Runtime software for a PC	■	N/A	VISUALRTPC
Time-Saving Editor Features			
Online and offline simulation	■	■	■
Macro capability	■	■	■
VB scripting	—	—	■
Multi-language	■	■	■
System/internal variables	■	■	■
Auto-scale application to different resolution/screen size	■	■	■
Scripting (IF, THEN, ELSE, GOTO)	■	■	■
Graphics library	■	—	■
Master pages	■ Screen groups	■ One	■ Screen groups
User-created controls	■	■	■
Customizable application symbols	■	■	■
Full math evaluation	■ With macros	■	■
Reusable controls, images and pages	■	■	■ Via indirect tag and/ or PLC assignments
Advanced search and replace	■	■	■
Advanced context sensitive help	■	■	■
Conversion of legacy PanelMate® configurations	—	—	■
Optional PanelBuilder™ conversion utility	—	—	■
Online configuration/editing	—	■	■

Notes

① See the logic section of the catalog for details on the logic features in the XSoft-CoDeSys-3 software package.
② Includes XSoft-CoDeSys-3 software for developing applications, runtime software for the XV Series. Single User License.
③ Includes XSoft-CoDeSys-3 software for developing applications, runtime software for the XV Series. Multi User License.

Software Product Selection Guide, continued

Description	Galileo	XSoft-CoDeSys-3 ①	Visual Designer
Runtime Features			
Clock synchronization with controller	■	■ Configured via visualization screens	■
Sound actions or control	■	—	■
Security	■	■	■ Advanced multi-level
Pop-up screens	■	—	■ And group screens
Animated graphics	■	■	■
Multi-touch and gesture support	■	—	■
Real-time trending	■	■	■
Recipes	■	■	■
Report generation	■	—	■
Timer scheduling	■	■	■
Calendar scheduling	—	■	■
Notification of data and events via email/text messaging	—	■	■
Data archiving	■	■	■
Archive to shared network drive	■	■	■
Alarm and event archiving	■	■	■
Historical trending	■	■	■
Import/export from XML or CSV	■	■	■
Database interface	—	■ DDE	■ ADO.net compliant
Vision system interfaces	■	—	■
Secure document and Web network browser	—	■ With user created passwords	■
Web server—viewing and control	—	■	■
Automatic scaling of Web clients	—	—	■
Remote desktop	■ VNC and RemoteClient	■ VNC and RemoteClient	■ VNC and RemoteClient
Launch/control third-party applications	—	—	■
Embedded PLC logic	—	■	—

Note

① See the logic section of the catalog for details on the logic features in the XSoft-CoDeSys-3 software package.

XV-100 Series Operator Interface

Contents

Description	*Page*
XV-100 Series Operator Interface	
Catalog Number Selection	**V7-T5-9**
Product Selection	**V7-T5-9**
Accessories	**V7-T5-10**
Technical Data and Specifications	**V7-T5-11**

XV-100 with Galileo and XSoft-CoDeSys-3

Product Description

XV with Galileo

The XV Series with Galileo offers a global visualization software package for all applications in system and machine building. It is designed to optimize performance on the XV platform. Galileo can also run as the visualization package on XV CoDeSys units when a stronger visualization tool is required.

XV with XSoft-CoDeSys

The XV series with XSoft-CoDeSys combines powerful logic and visualization capabilities into a single device. It is ideal for OEM applications where low component count and ease of program development and remote administration is critical.

The XV Models with XSoft-CoDeSys offer multiple field bus options built directly on-board the unit to provide an overall solution optimized both for size and cost.

Features

XV-102 with Galileo only units

- 3.5-, 5.7- and 7.0-inch (widescreen)
- Plastic housing
- Resistive touch with flush bezel
- Ethernet on all models
- RS-232 or RS-485 serial ports available
- Prelicensed for Galileo Runtime (GRS)

XV-100 with XSoft-CoDeSys

XV Series operator interface with Windows CE operating system

- 3.5-, 5.7-, 7.0- (widescreen), 8.4- and 10.4-inch screen sizes
- Cost-effective plastic or metal housing
- Resistive touch with flush bezel
- Ethernet and serial ports on all models
- PROFIBUS, CANopen and SmartWire-DT optional
- XSoft-CoDeSys-3 programming software
- Pre-licensed for CoDeSys runtime

Standards and Certifications

- CE
- UL
- cUL
- RoHS

Selecting the right model for your application

The XV product offered with Visual Designer, Galileo or XSoft-CoDeSys offers the highest level of flexibility for one operator interface product.

Galileo provides a visualization environment designed around the needs of machine building OEMs. Use Galileo when designing high-performance machines in the OEM space.

XSoft-CoDeSys turns the XV into a fully integrated Logic and OI platform (HMI-PLC). Use XSoft-CoDeSys to unleash the PLC functionality on an XV. With optional communication interfaces like SmartWire-DT, CANopen and PROFIBUS, Eaton welcomes you into the Lean Automation space.

On XV-300 models on **Page V7-T5-12**, you can take advantage of the best of both worlds with Visual Designer and XSoft-CoDeSys together. Combining the power of these two software platforms provides limitless possibilities on an HMI-PLC and SCADA platform.

Visual Designer provides a fully integrated SCADA and HMI platform. Use Visual Designer when Web enabling, remote access, database and connectivity, and when one operator software package is required across XV and XP platforms.

Catalog Number Selection

XV Operator Interface—XV-102, XV-152

XV-102, XV-152

XV – 102 – B3 – 35TQRG – 10

Family
XV = Microsoft Windows CE operating system

Performance Class
102 = CE, plastic housing, 2nd gen **152** = CE, metal housing, 2nd gen

Features Base Unit Variant ①	Features Additional COMM Options
B = Retentive memory **D** = Retentive memory, USB host, RS-232 **E** = Retentive memory, USB host, SmartWire-DT **H** = Galileo only unit, USB host	**3** = 1-RS-232 **4** = 1-RS-485 **6** = 1-CANopen **8** = 1-PROFIBUS **E** = 1-SmartWire-DT

Display Size	Display Technology	OS Build
35 = 3.5-inch **57** = 5.7-inch **70** = 7.0-inch **84** = 8.4-inch **10** = 10.4-inch	**TQR** = TFT (QVGA) resistive **TVR** = TFT (VGA) resistive **TWR** = TFT (widescreen) resistive	**C** = XSoft-CoDeSys/Galileo **G** = CE Professional OS and Visual Designer runtime 1500 tags ② **L** = Galileo only unit

Branding and Bezel
10 = Standard blank front bezel with Eaton branded product label

Product Selection

XV Operator Interface with Galileo Only ③

Description	Catalog Number
XV 3.5-inch TFT plastic housing, resistive touch, Ethernet RS-232	**XV-102-H3-35TQRL-10**
XV 3.5-inch TFT plastic housing, resistive touch, Ethernet RS-485	**XV-102-H4-35TQRL-10**
XV 5.7-inch TFT plastic housing, resistive touch, Ethernet RS-232	**XV-102-H3-57TVRL-10**
XV 5.7-inch TFT plastic housing, resistive touch, Ethernet RS-485	**XV-102-H4-57TVRL-10**
XV 7.0-inch TFT plastic housing, resistive touch, Ethernet RS-232	**XV-102-H3-70TWRL-10**
XV 7.0-inch TFT plastic housing, resistive touch, Ethernet RS-485	**XV-102-H4-70TWRL-10**

Notes

① All 1xx performance class units have 400 MHz processor, 64 MB DRAM, 1 x 10/100 Ethernet, and 1 x USB device.

② Standard software on embedded hardware. These XV models have a Microsoft Windows CE 5.0 Professional operating system and are pre-licensed with Visual Designer runtime for up to 1500 tags, 3 simultaneous communication drivers, and 1 Web session. Field upgrades are available for up to 4000 tags, 3 drivers, and 2, 4 or 8 simultaneous Web sessions.

③ For more information on Galileo software, see **Page V7-T5-20**.

XV Operator Interface with XSoft-CoDeSys, HMI-PLC [1]

Description	Catalog Number
XV 3.5-inch TFT plastic housing, resistive touch, CANopen, RS-485	**XV-102-B6-35TQRC-10**
XV 3.5-inch TFT plastic housing, resistive touch, PROFIBUS, RS-485	**XV-102-B8-35TQRC-10**
XV 3.5-inch TFT plastic housing, resistive touch, SmartWire-DT	**XV-102-BE-35TQRC-10**
XV 5.7-inch TFT plastic housing, resistive touch, CANopen, RS-232, RS-485	**XV-102-D6-57TVRC-10**
XV 5.7-inch TFT plastic housing, resistive touch, PROFIBUS, RS-232, RS-485	**XV-102-D8-57TVRC-10**
XV 5.7-inch TFT plastic housing, resistive touch, CANopen, SmartWire-DT, RS-485	**XV-102-E6-57TVRC-10**
XV 5.7-inch TFT plastic housing, resistive touch, PROFIBUS, SmartWire-DT, RS-485	**XV-102-E8-57TVRC-10**
XV 7.0-inch TFT plastic housing, resistive touch, CANopen, RS-232, RS-485	**XV-102-D6-70TWRC-10**
XV 7.0-inch TFT plastic housing, resistive touch, PROFIBUS, RS-232, RS-485	**XV-102-D8-70TWRC-10**
XV 7.0-inch TFT plastic housing, resistive touch, CANopen, SmartWire-DT, RS-485	**XV-102-E6-70TWRC-10**
XV 7.0-inch TFT plastic housing, resistive touch, PROFIBUS, SmartWire-DT, RS-485	**XV-102-E8-70TWRC-10**
XV 5.7-inch TFT metal housing, resistive touch, CANopen, RS-232, RS-485	**XV-152-D6-57TVRC-10**
XV 5.7-inch TFT metal housing, resistive touch, PROFIBUS, RS-232, RS-485	**XV-152-D8-57TVRC-10**
XV 5.7-inch TFT metal housing, resistive touch, CANopen, SmartWire-DT, RS-485	**XV-152-E6-57TVRC-10**
XV 5.7-inch TFT metal housing, resistive touch, PROFIBUS, SmartWire-DT, RS-485	**XV-152-E8-57TVRC-10**
XV 8.4-inch TFT metal housing, resistive touch, CANopen, RS-232, RS-485	**XV-152-D6-84TVRC-10**
XV 8.4-inch TFT metal housing, resistive touch, PROFIBUS, RS-232, RS-485	**XV-152-D8-84TVRC-10**
XV 8.4-inch TFT metal housing, resistive touch, CANopen, SmartWire-DT, RS-485	**XV-152-E6-84TVRC-10**
XV 8.4-inch TFT metal housing, resistive touch, PROFIBUS, SmartWire-DT, RS-485	**XV-152-E8-84TVRC-10**
XV 10.4-inch TFT metal housing, resistive touch, CANopen, RS-232, RS-485	**XV-152-D6-10TVRC-10**
XV 10.4-inch TFT metal housing, resistive touch, PROFIBUS, RS-232, RS-485	**XV-152-D8-10TVRC-10**
XV 10.4-inch TFT metal housing, resistive touch, CANopen, SmartWire-DT, RS-485	**XV-152-E6-10TVRC-10**
XV 10.4-inch TFT metal housing, resistive touch, PROFIBUS, SmartWire-DT, RS-485	**XV-152-E8-10TVRC-10**

Accessories

XV Family Accessories

Description	Catalog Number
SD memory card for all XV-102 and XV-152 models	**MEMORY-SD-A1-S**
Spare part kit for XV-102 models—1 power connector, 8 mounting brackets, 1 sealing strip, 1 touch pen	**ACC-TP-57-KG-1**
Spare part kit for XV-152 models—1 power connector, 8 mounting brackets, 1 sealing strip, 1 touch pen	**ACC-TP-10-12-RES-1**
SD memory card with 1 GB storage for all XV-100 and XV-300 models	**MEMORY-SD-A2-S**
Accessory set for XV-303 (10 mounting brackets and 1 power plug)	**ACCESSORIES-TP-10-KG**

XV Family Software Options

Description	Catalog Number
Product license for 40 points for use with Galileo or XSoft-CoDeSys units	**LIC-OPT-1ST-LEVEL**
Product license for 80 points for use with Galileo or XSoft-CoDeSys units	**LIC-OPT-2ND-LEVEL**
License product Paper PLC with license sticker for XSoft-CoDeSys-2/-3 for XV-300	**LIC-PLC-A**
License product Paper Visual Designer with license sticker for XV-300	**LIC-VISD-A**

Note

[1] For more information on XSoft-CoDeSys software, see **Page V7-T5-21**.

Technical Data and Specifications

XV Operator Interface

Series	XV Midrange Operator Interface					
Model	**XV-102**			**XV-152**		
Screen Size	**3.5-Inch**	**5.7-Inch**	**7.0-Inch**	**5.7-Inch**	**8.4-Inch**	**10.4-Inch**
Operating system	WinCE 5.0 Professional/Standard			WinCE 5.0 Professional/Standard		
Touchscreen technology	Resistive	Resistive	Resistive	Resistive	Resistive	Resistive
Display, colors	Color TFT, 64 k colors	Color TFT, 64 k colors	Color TFT, 64 k colors	Color TFT, 64 k colors	Color TFT, 64 k colors	Color TFT, 64 k colors
Pixel resolution (landscape) portrait mode also available	QVGA 320 x 240	VGA 640 x 480	WVGA 800 x 480	VGA 640 x 480	VGA 640 x 480	VGA 640 x 480
Brightness (cd/m^2)	250	250	250	350	350	350
Backlight	LED, selectable dimming	LED, selectable dimming	LED, selectable dimming	LED, selectable dimming	LED, selectable dimming	LED, selectable dimming
Lifespan of backlight (half-life)	40,000 hrs	40,000 hrs	40,000 hrs	40,000 hrs	40,000 hrs	40,000 hrs
Processor	32 bit RISC, 400 MHz	32 bit RISC, 400 MHz	32 bit RISC, 400 MHz	32 bit RISC, 400 MHz	32 bit RISC, 400 MHz	32 bit RISC, 400 MHz
Volatile memory	64 MB DRAM	64 MB DRAM	64 MB DRAM	64 MB DRAM	64 MB DRAM	64 MB DRAM
Non-volatile memory	125 KB NVRAM/64 MB NAND, 1 SD card slot	125 KB NVRAM/64 MB NAND/ 2 MB NOR, 1 SD card slot		125 KB NVRAM/64 MB NAND/ 2 MB NOR, 1 SD card slot		
Real time clock	Yes	Yes	Yes	Yes	Yes	Yes
Communication ports	Ethernet 10/100, RS-485 or RS-232 USB Device	Ethernet 10/100, RS-485, RS-232 USB Host, USB Device		Ethernet 10/100, RS-485, RS-232 USB Host, USB Device		
Slots for COMM modules	None	None	None	None	None	None
Power supply rated voltage	24 Vdc nominal (–20%/+25%) with polarity protection			24 Vdc nominal (–20%/+25%) with polarity protection		
Continuous current consumption (max. amps)	0.2	0.4	0.4	0.4	0.6	0.6
Starting current inrush (A^{2}s)	1.5	1.5	1.5	1.5	1.5	1.5
Ambient conditions						
Operation—relative humidity, noncondensing	0 to 50 °C, 10 to 95%	0 to 50 °C, 10 to 95%	0 to 50 °C, 10 to 95%	0 to 50 °C, 10 to 95%	0 to 50 °C, 10 to 95%	0 to 50 °C, 10 to 95%
Storage/transport—relative humidity, noncondensing	–20 to 60 °C, 10 to 95%	–20 to 60 °C, 10 to 95%	–20 to 60 °C, 10 to 95%	–20 to 60 °C, 10 to 95%	–20 to 60 °C, 10 to 95%	–20 to 60 °C, 10 to 95%
Shock	IEC 60068-2-27 15 g for 11 ms duration			IEC 60068-2-27 15 g for 11 ms duration		
Vibration	IEC 60068-2-6 5–9 Hz: 3.5 mm displacement 9–60 Hz: 0.15 mm displacement 60–150 Hz: 2 g acceleration			IEC 60068-2-6 5–9 Hz: 3.5 mm displacement 9–60 Hz: 0.15 mm displacement 60–150 Hz: 2 g acceleration		
Agency certifications and standards	CE, UL/cUL, CSA (pending), RoHS			CE, UL/cUL, CSA (pending), RoHS		
Protection type						
Front	IP65, NEMA 4X (indoor)	IP65, NEMA 4X (indoor)	IP65, NEMA 4X (indoor)	IP65, NEMA 4X (indoor)	IP65, NEMA 4X (indoor)	IP65, NEMA 4X (indoor)
Rear	IP20, NEMA 1	IP20, NEMA 1	IP20, NEMA 1	IP20, NEMA 1	IP20, NEMA 1	IP20, NEMA 1
Housing material	Plastic	Plastic	Plastic	Metal	Metal	Metal
Dimensions W x H x D (mm)	136 x 100 x 30	170 x 130 x 39	210 x 135 x 38	212 x 156 x 53	275 x 208 x 53	345 x 260 x 54
Mounting cutout W x H (mm)	123 x 87	157 x 117	197 x 122	198 x 142	261 x 194	329 x 238
Approximate weight lbs (kg)	0.7 (0.3)	1.3 (0.6)	1.3 (0.6)	2.9 (1.3)	4.3 (2.1)	6.1 (3.0)
Ability to run third-party software	No	No	No	No	No	No
XSoft-CoDeSys-3 development software	SW-XSOFT-CODESYS-3-S (seat) SW-XSOFT-CODESYS-3-M (multi-seat)			SW-XSOFT-CODESYS-3-S (seat) SW-XSOFT-CODESYS-3-M (multi-seat)		
Galileo development software	SW-GALILEO-S (seat) SW-GALILEO-M (multi-seat)			SW-GALILEO-S (seat) SW-GALILEO-M (multi-seat)		

XV-300 Series Operator Interface

Contents

Description	*Page*
XV-300 Series Operator Interface	
Catalog Number Selection	**V7-T5-13**
Product Selection	**V7-T5-14**
Accessories	**V7-T5-15**
Technical Data and Specifications	**V7-T5-16**

XV-300 with Galileo, XSoft-CoDeSys-3 or Visual Designer

Product Description

XV with Galileo

The XV Series with Galileo offers a global visualization software package for all applications in system and machine building. It is designed to optimize performance on the XV platform. Galileo can also run as the visualization package on XV CoDeSys units when a stronger visualization tool is required.

XV with XSoft-CoDeSys

The XV series with XSoft-CoDeSys combines powerful logic and visualization capabilities into a single device. It is ideal for OEM applications where low component count and ease of program development and remote administration is critical.

The XV Models with XSoft-CoDeSys offer multiple field bus options built directly on-board the unit to provide an overall solution optimized both for size and cost.

XV with Visual Designer

Positioned between the **HMi** and the XP series of operator interface, the XV series is ideal for applications requiring extensive connectivity and the advanced features available in Visual Designer without the expense associated with more powerful open platforms.

The XV models were designed with OEMs in mind featuring an attractive bezel and slim and light weight housing. The clip mount design simplifies installation.

Features

XV-300 Software Bundles

The XV-300 series is the latest and most powerful in the XV product line. Its powerful CPU and graphics co-processor provide the high-performance engine required by demanding HMI and HMI-PLC applications. Coupled with an attractive, sleek design and multi-touch touchscreen, it supports the modern gesture based user interface that redefines ease of use.

The XV-300 series can run Visual Designer, XSoft-CoDeSys and Galileo and unlike the XV-100 series, there are bundles that include Visual Designer and XSoft-CoDeSys runtime licenses on a single unit. Because of the higher capacity and performance of the XV-300 over the XV-100, these appeal to OEMs who have demanding HMI-PLC applications in which case they will choose a model bundled with XSoft-CoDeSys software.

All XSoft-CoDeSys models include XSoft-CoDeSys logic and visualization tools, but also include a Galileo runtime license at no additional charge so the user can choose which visualization tool is appropriate for their needs. Users who have large or demanding HMI applications that also require some SCADA software features such as web serving, document (PDF) viewing, SQL database interfaces, FDA 21 CFR Part 11 compliance or other advanced functionality could choose the XV-300 models bundled with Visual Designer software. For users who need PLC applications and advanced Visualization and SCADA features, they can choose XV-300 models with both XSoft-CoDeSys and Visual Designer runtime licenses bundled in a single package.

Standards and Certifications

- CE
- UL
- cUL
- RoHS

Selecting the right model for your application

The XV product offered with Visual Designer, Galileo or XSoft-CoDeSys offers the highest level of flexibility for one operator interface product.

Galileo provides a visualization environment designed around the needs of machine building OEMs. Use Galileo when designing high-performance machines in the OEM space.

XSoft-CoDeSys turns the XV into a fully integrated Logic and OI platform (HMI-PLC). Use XSoft-CoDeSys to unleash the PLC functionality on an XV. With optional communication interfaces like SmartWire-DT, CANopen and PROFIBUS, Eaton welcomes you into the Lean Automation space.

On XV-300 models, you can take advantage of the best of both worlds with Visual Designer and XSoft-CoDeSys together. Combining the power of these two software platforms provides limitless possibilities on an HMI-PLC and SCADA platform.

Visual Designer provides a fully integrated SCADA and HMI platform. Use Visual Designer when Web enabling, remote access, database and connectivity, and when one operator software package is required across XV and XP platforms.

Software Suite

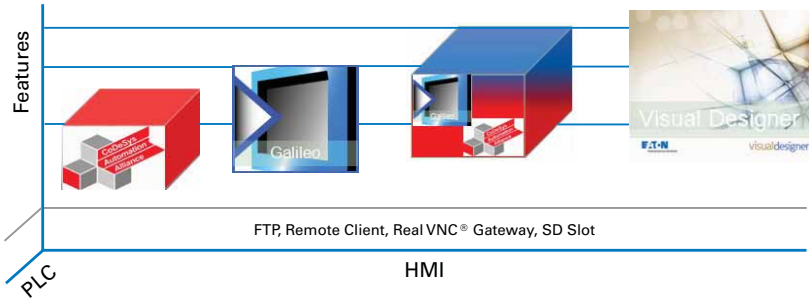

Catalog Number Selection

XV Operator Interface—XV-303, XV-313

XV-303, XV-313

XV – 303 – 70 – C00 – A00 – 1D

Family
XV = Microsoft Windows CE operating system

Performance Class
303 = Panel mount, 3rd gen
313 = Back mount, 3rd gen

Display Size
70 = 7.0-inch wide
10 = 10.0-inch wide

2nd Ethernet Port	SWDT Port	PROFIBUS Port
B = No	**0** = No	**0** = No
C = Yes	**E** = Yes	**2** = Yes

Future
A00

Software Bundle
1B = Basic
1C = CoDeSys
1D = Visual Designer
1E = Visual Designer and CoDeSys

Product Selection

XV Operator Interface with Galileo ①

Description	Catalog Number
XV with 7.0-inch TFT, plastic housing, PCT multi-touch, single Ethernet	**XV-303-70-B00-A00-1B**
XV with 7.0-inch TFT, plastic housing, PCT multi-touch, dual Ethernet	**XV-303-70-C00-A00-1B**
XV with 10.1-inch TFT, plastic housing, PCT multi-touch, single Ethernet	**XV-303-10-B00-A00-1B**
XV with 10.1-inch TFT, plastic housing, PCT multi-touch, dual Ethernet	**XV-303-10-C00-A00-1B**
XV with 15.4-inch TFT, plastic housing, PCT multi-touch, single Ethernet	**XV-303-15-C00-A00-1B**
XV with 15.4-inch TFT, plastic housing, PCT multi-touch, dual Ethernet, Profibus	**XV-303-15-C02-A00-1B**

XV Operator Interface with XSoft-CoDeSys, HMI-PLC ②

Description	Catalog Number
XV with 7.0-inch TFT, plastic housing, PCT multi-touch, single Ethernet, CAN, RS-232, RS-485, USB host	**XV-303-70-B00-A00-1C**
XV with 7.0-inch TFT, plastic housing, PCT multi-touch, dual Ethernet, CAN, RS-232, RS-485, USB host	**XV-303-70-C00-A00-1C**
XV with 7.0-inch TFT, plastic housing, PCT multi-touch, single Ethernet, CAN, PROFIBUS, RS-232, RS-485, USB host	**XV-303-70-B02-A00-1C**
XV with 7.0-inch TFT, plastic housing, PCT multi-touch, dual Ethernet, CAN, PROFIBUS, RS-232, RS-485, USB host	**XV-303-70-C02-A00-1C**
XV with 7.0-inch TFT, plastic housing, PCT multi-touch, single Ethernet, CAN, SmartWire-DT, RS-232, RS-485, USB host	**XV-303-70-BE0-A00-1C**
XV with 7.0-inch TFT, plastic housing, PCT multi-touch, dual Ethernet, CAN, SmartWire-DT, RS-232, RS-485, USB host	**XV-303-70-CE0-A00-1C**
XV with 10.0-inch TFT, plastic housing, PCT multi-touch, single Ethernet, CAN, RS-232, RS-485, USB host	**XV-303-10-B00-A00-1C**
XV with 10.0-inch TFT, plastic housing, PCT multi-touch, dual Ethernet, CAN, RS-232, RS-485, USB host	**XV-303-10-C00-A00-1C**
XV with 10.0-inch TFT, plastic housing, PCT multi-touch, single Ethernet, CAN, PROFIBUS, RS-232, RS-485, USB host	**XV-303-10-B02-A00-1C**
XV with 10.0-inch TFT, plastic housing, PCT multi-touch, dual Ethernet, CAN, PROFIBUS, RS-232, RS-485, USB host	**XV-303-70-C02-A00-1C**
XV with 10.0-inch TFT, plastic housing, PCT multi-touch, single Ethernet, CAN, SmartWire-DT, RS-232, RS-485, USB host	**XV-303-10-BE0-A00-1C**
XV with 10.0-inch TFT, plastic housing, PCT multi-touch, dual Ethernet, CAN, SmartWire-DT, RS-232, RS-485, USB host	**XV-303-10-CE0-A00-1C**
XV with 15.4-inch TFT, plastic housing, PCT multi-touch, dual Ethernet	**XV-303-15-C00-A00-1C**
XV with 15.4-inch TFT, plastic housing, PCT multi-touch, dual Ethernet, Profibus	**XV-303-15-C02-A00-1C**
XV with 15.4-inch TFT, plastic housing, PCT multi-touch, dual Ethernet, SWDT	**XV-303-15-CE0-A00-1C**
XV with 15.4-inch TFT, plastic housing, PCT multi-touch, dual Ethernet, Profibus and SWDT	**XV-303-15-CE2-A00-1C**

XV Rear Mounted Operator Interface with XSoft-CoDeSys, HMI-PLC

Description	Catalog Number
XV rear mount with 7.0-inch TFT, plastic housing, PCT multi-touch, single Ethernet	**XV-313-70-B00-A00-1C**
XV rear mount with 7.0-inch TFT, plastic housing, PCT multi-touch, dual Ethernet	**XV-313-70-C00-A00-1C**
XV rear mount with 7.0-inch TFT, plastic housing, PCT multi-touch, dual Ethernet, SWDT	**XV-313-70-CE0-A00-1C**
XV rear mount with 10.1-inch TFT, plastic housing, PCT multi-touch, single Ethernet	**XV-313-10-B00-A00-1C**
XV rear mount with 10.1-inch TFT, plastic housing, PCT multi-touch, dual Ethernet	**XV-313-10-C00-A00-1C**
XV rear mount with 10.1-inch TFT, plastic housing, PCT multi-touch, dual Ethernet, SWDT	**XV-313-10-CE0-A00-1C**

Notes

① For more information on Galileo software, see **Page V7-T5-20**.
② For more information on XSoft-CoDeSys software, see **Page V7-T5-21**.

XV Operator Interface

XV Operator Interface with Visual Designer ①

Description	Catalog Number
XV with 7.0-inch TFT, plastic housing, PCT multi-touch, dual Ethernet, CAN, RS-232, RS-485, USB host	**XV-303-70-C00-A00-1D**
XV with 10.0-inch TFT, plastic housing, PCT multi-touch, dual Ethernet, CAN, RS-232, RS-485, USB host	**XV-303-10-C00-A00-1D**
XV with 15.4-inch TFT, plastic housing, PCT multi-touch, dual Ethernet	**XV-303-15-C00-A00-1D**

XV Operator Interface with Visual Designer and XSoft-CoDeSys ②

Description	Catalog Number
XV with 7.0-inch TFT, plastic housing, PCT multi-touch, dual Ethernet, CAN, RS-232, RS-485, USB host	**XV-303-70-C00-A00-1E**
XV with 7.0-inch TFT, plastic housing, PCT multi-touch, dual Ethernet, CAN, SmartWire-DT, RS-232, RS-485, USB host	**XV-303-70-CE0-A00-1E**
XV with 10.0-inch TFT, plastic housing, PCT multi-touch, dual Ethernet, CAN, RS-232, RS-485, USB host	**XV-303-10-C00-A00-1E**
XV with 10.0-inch TFT, plastic housing, PCT multi-touch, dual Ethernet, CAN, SmartWire-DT, RS-232, RS-485, USB host	**XV-303-10-CE0-A00-1E**

Accessories

XV Family Accessories

Description	Catalog Number
SD memory card for all XV-102 and XV-152 models	**MEMORY-SD-A1-S**
Spare part kit for XV-102 models—1 power connector, 8 mounting brackets, 1 sealing strip, 1 touch pen	**ACC-TP-57-KG-1**
Spare part kit for XV-152 models—1 power connector, 8 mounting brackets, 1 sealing strip, 1 touch pen	**ACC-TP-10-12-RES-1**
SD memory card with 1 GB storage for all XV-100 and XV-300 models	**MEMORY-SD-A2-S**
Accessory set for XV-303 (10 mounting brackets and 1 power plug)	**ACCESSORIES-TP-10-KG**

XV Family Software Options

Description	Catalog Number
Product license for 40 points for use with Galileo or XSoft-CoDeSys units	**LIC-OPT-1ST-LEVEL**
Product license for 80 points for use with Galileo or XSoft-CoDeSys units	**LIC-OPT-2ND-LEVEL**
License product Paper PLC with license sticker for XSoft-CoDeSys-2/-3 for XV-300	**LIC-PLC-A**
License product Paper Visual Designer with license sticker for XV-300	**LIC-VISD-A**

Notes

① For more information on Galileo software, see **Page V7-T5-20**.
② For more information on Visual Designer software, see **Page V7-T5-22**.

Technical Data and Specifications

XV Operator Interface

Series			
Model		**XV-303**	
Screen Size	**7.0-Inch**	**10.0-Inch**	**15.0-Inch**
Operating system	WinCE7.0 Professional	WinCE7.0 Professional	WinCE7.0 Professional
Touchscreen technology	Projected Capacitive Multi-touch	Projected Capacitive Multi-touch	Projected Capacitive Multi-touch
Display colors	16 million	16 million	16 million
Pixel resolution (landscape) portrait mode also available	WSVGA 1024 x 600	WSVGA 1024 x 600	1366 x 768
Brightness (cd/m^2)	400	400	400
Backlight	LED, selectable dimming	LED, selectable dimming	LED, selectable dimming
Lifespan of backlight (half-life)	50,000 hrs	50,000 hrs	50,000 hrs
Processor	800 MHz Cortex A8 CPU with graphics co-processor	800 MHz Cortex A8 CPU with graphics co-processor	800 MHz Cortex A8 CPU with graphics co-processor
Volatile memory	512 MB DRAM	512 MB DRAM	512 MB DRAM
Non-volatile memory	128 KB NVRAM (PLC), 1 GB SLC, 1 SD card slot	128 KB NVRAM (PLC), 1 GB SLC, 1 SD card slot	128 KB NVRAM (PLC), 1 GB SLC, 1 SD card slot
Real time clock	Yes	Yes	Yes
Communication ports	Ethernet 10/100, RS-232, RS-485, CAN, USB Host, USB Device	Ethernet 10/100, RS-232, RS-485, CAN, USB Host, USB Device	Ethernet 10/100, RS-232, RS-485, CAN, USB Host, USB Device
Optional communication ports	Second Ethernet 10/100, PROFIBUS DP, SmartWire-DT	Second Ethernet 10/100, PROFIBUS DP, SmartWire-DT	Second Ethernet 10/100, PROFIBUS DP, SmartWire-DT
Power supply rated voltage	24 Vdc nominal (–20%/+25%) with polarity protection	24 Vdc nominal (–20%/+25%) with polarity protection	24 Vdc nominal (–20%/+25%) with polarity protection
Continuous current consumption (max. amps)	0.6 (7.0-inch)	0.75 (10.1-inch)	0.9 (15.4-inch)
Starting current inrush (A2s)	1.0 (7.0-inch)	1.0 (10.1-inch)	1.0 (15.4-inch)
Ambient conditions			
Operation-relative humidity, noncondensing	0 to 50 °C, 10 to 95%	0 to 50 °C, 10 to 95%	0 to 50 °C, 10 to 95%
Storage/transport-relative humidity, noncondensing	–20 to +60 °C, 10 to 95%	–20 to +60 °C, 10 to 95%	–20 to +60 °C, 10 to 95%
Shock	IEC 60068-2-27 15 g for 11 ms duration	IEC 60068-2-27 15 g for 11 ms duration	IEC 60068-2-27 15 g for 11 ms duration
Vibration	IEC 60068-2-6 5–9 Hz: 3.5 mm displacement 9–60 Hz: 0.15 mm displacement 60–150 Hz: 2 g acceleration	IEC 60068-2-6 5–9 Hz: 3.5 mm displacement 9–60 Hz: 0.15 mm displacement 60–150 Hz: 2 g acceleration	IEC 60068-2-6 5–9 Hz: 3.5 mm displacement 9–60 Hz: 0.15 mm displacement 60–150 Hz: 2 g acceleration
Agency certifications and standards	CE, UL/cUL, RoHS2, UL/cUL Class I Div 2 groups A, B, C, D (pending) ATEX Zone 22 (pending)	CE, UL/cUL, RoHS2, UL/cUL Class I Div 2 groups A, B, C, D (pending) ATEX Zone 22 (pending)	CE, UL/cUL, RoHS2, UL/cUL Class I Div 2 groups A, B, C, D (pending) ATEX Zone 22 (pending)
Protection type			
Front	IP65, NEMA 4X (indoor)	IP65, NEMA 4X (indoor)	IP65, NEMA 4X (indoor)
Rear	IP20, NEMA 1	IP20, NEMA 1	IP20, NEMA 1
Housing material	Plastic	Plastic	Plastic
Dimensions W x H x D (mm)	196 x 135 x 51	269 x 174 x 58	404 x 255 x 53
Mounting cutout W x H (mm)	182 x 121	254 x 160	388 x 239
Approximate weight lbs (kg)	1.6 (0.74)	2.5 (1.13)	8.6 (3.9)
Ability to run third-party software	No	No	No
Visual Designer development software	VISUALDCE or VISUALDXP	VISUALDCE or VISUALDXP	VISUALDCE or VISUALDXP
Pre-licensed tags, drivers, Web	1500 tags, 3 drivers, 1 Web session	1500 tags, 3 drivers, 1 Web session	1500 tags, 3 drivers, 1 Web session
Field upgradeable max. tags, drivers, Web sessions (VisD)	4000 tags, 5 drivers, 1, 2, 4 or 8 simultaneous Web sessions	4000 tags, 5 drivers, 1, 2, 4 or 8 simultaneous Web sessions	4000 tags, 5 drivers, 1, 2, 4 or 8 simultaneous Web sessions
XSoft-CoDeSys-3 development software	SW-XSOFT-CODESYS-3-S (seat)	SW-XSOFT-CODESYS-3-M (multi-seat)	SW-XSOFT-CODESYS-3-M (multi-seat)

XP Operator Interface

Contents

Description	*Page*
XP-503 with Visual Designer	
Catalog Number Selection	**V7-T5-18**
Product Selection	**V7-T5-18**
Accessories	**V7-T5-18**
Technical Data and Specifications	**V7-T5-19**

XP-503 with Visual Designer

Product Description

The XP-500 series sets a new standard for HMI and SCADA controls. Capacitive multi-touch displays allow familiar intuitive gestures for zoom, scroll and swipe, and offer increased safety to your system with two hand or multiple button activation control for critical functions.

XP-500 Panel PCs run on an open Windows Embedded Standard 7 Operating System to support all Windows standard PC applications and feature Protect Mode™ for preventing unauthorized changes to the operating system.

XP-500 units come with advanced yet easy-to-use Visual Designer software pre-installed and licensed.

All these features come standard in a package that is slim and modern in design yet also rugged. With no fan or moving parts, a scratch-resistant glass screen, and powder-coated aluminum body, XP-500 is fit for any industrial application.

Features

XP-500 series operator interface with Windows Embedded Standard 7 operating system

- 10.1, 15.6 and 21.5 inch high resolution widescreen displays
- Projected capacitive touchscreen supports gestures and recognizes up to 4 simultaneous touch inputs
- Remote access to mobile devices or tablets using HTML5 interface
- 1.65 GHz Dual Core CPU with fast Radeon™ HD graphics for best-in-class speed and graphics performance
- 4 GB DDR3-RAM large memory for parallel processing and increased system performance
- 32 GB internal solid-state drive high volume internal memory
- 2 independent Ethernet ports standard for separation of IT and process level communications
- All solid-state media and no moving parts or fan increases reliability
- Non-corruptible OS with Protect Mode increases security and reliability

Standards and Certifications

- UL/cUL (UL 508)
- CE Mark
- UL Class 1 Div 2 (Groups A, B, C, D)
- ATEX Zone 22, Category 3D
- Front
  - IP65, NEMA 4X (indoor), NEMA 12
- Rear
  - IP20

Catalog Number Selection

XP Operator Interface

XP

XP – 503 10 A10 A00 1V

Family	Performance Class	Display Size	Processor and Memory	Mounting and Logo	Development License
XP = Windows Embedded Standard 7 Panel PC	**503** = Multi-touch, metal housing, glass screen	**10** = 10.1-inch widescreen **15** = 15.6-inch widescreen **21** = 21.5-inch widescreen	**A10** = 1.65 GHz AMD, 32 GB SSD	**A00** = Panel mount, no logo	**1V** = Win7 Embedded Std., Visual Designer runtime bundle

Product Selection

XP Operator Interface with Galileo

Description	Catalog Number
10.1-inch widescreen with multi-touch, 1.65 GHz dual core CPU, 4 GB DDR3-RAM, 4 GB CFast memory	**XP-503-10-A10-A00-1B**
15.4-inch widescreen with multi-touch, 1.65 GHz dual core CPU, 4 GB DDR3-RAM, 4 GB CFast memory	**XP-503-15-A10-A00-1B**
21.5-inch widescreen with multi-touch, 1.65 GHz dual core CPU, 4 GB DDR3-RAM, 4 GB CFast memory	**XP-503-21-A10-A00-1B**

XP Operator Interface

XP Operator Interface with Visual Designer

Description	Catalog Number
XP 10.1-inch widescreen with multi-touch, 1.65 GHz dual core CPU, 4 GB DDR3-RAM, 4 GB CFast memory, 4000 tags, 5 drivers, 1 Web session	**XP-503-10-A10-A00-1V**
XP 15.6-inch widescreen with multi-touch, 1.65 GHz dual core CPU, 4 GB DDR3-RAM, 4 GB CFast memory, 4000 tags, 5 drivers, 1 Web session	**XP-503-15-A10-A00-1V**
XP 21.5-inch widescreen with multi-touch, 1.65 GHz dual core CPU, 4 GB DDR3-RAM, 4 GB CFast memory, 4000 tags, 5 drivers, 1 Web session	**XP-503-21-A10-A00-1V**

Accessories

XP Operator Interface

Description	Catalog Number
XP-500 spare part kit for all XP models—1 power connector, 8 mounting brackets, 1 sealing strip	**ACC-TP-57-RES-1**

Notes

① All 5XX units have 2 x 10/100/1000 Ethernet, 2 x USB 3.0, 1 x RS-232, 1 x RS-485, 1 x DVI-I.

② Standard software on embedded hardware.

Technical Data and Specifications

XP Operator Interface

Model	10.1-inch XP-503-10-A10-A00-1V	15.6-inch XP-503-15-A10-A00-1V	21.5-inch XP-503-21-A10-A00-1V
Display			
Screen diagonal	10.1-inch widescreen	15.6-inch widescreen	21.5-inch widescreen
Resolution	1024 x 600 pixels	1366 x 768 pixels	1920 x 1080 pixels
Backlight	LED, dimmable via software	LED, dimmable via software	LED, dimmable via software
Display brightness (typical)	500 cd/m^2	300 cd/m^2	250 cd/m^2
Contrast ratio (typical)	500:1	500:1	1000:1
Operation			
Touch sensor	Multi-touch touchscreen (4 simultaneous touches)	Multi-touch touchscreen (4 simultaneous touches)	Multi-touch touchscreen (4 simultaneous touches)
Technology	Projected Capacitive Touch (PCT)	Projected Capacitive Touch (PCT)	Projected Capacitive Touch (PCT)
Enclosures			
Front glass	Non-reflective tempered glass	Non-reflective tempered glass	Non-reflective tempered glass
Bezel	Powder-coated aluminum	Powder-coated aluminum	Powder-coated aluminum
Device dimensions (w x h x d)	275 x 179 x 80 mm	404 x 255 x 80 mm	536 x 328 x 83 mm
Installation cutout (w x h)	261 x 164 mm	387 x 238 mm	519 x 313 mm
Weight	2.6 kg	4.8 kg	7.8 kg
System			
Processor	AMD GX217GA 1.65 GHz DualCore	AMD GX217GA 1.65 GHz DualCore	AMD GX217GA 1.65 GHz DualCore
Graphic	AMD Radeon HD8280E 450 MHz	AMD Radeon HD8280E 450 MHz	AMD Radeon HD8280E 450 MHz
Memory	4 GB DDR3-RAM	4 GB DDR3-RAM	4 GB DDR3-RAM
Internal mass memory	32 GB SSD mSATA	32 GB SSD mSATA	32 GB SSD mSATA
Removable memory	1 x CFast slot, pre-populated with 4 GB CFast memory card	1 x CFast slot, pre-populated with 4 GB CFast memory card	1 x CFast slot, pre-populated with 4 GB CFast memory card
Interfaces	2 x Ethernet 10/100/1000 Mbps; 2 x USB 3.0; 1 x RS-232; 1 x RS-485; 1 x DVI-I	2 x Ethernet 10/100/1000 Mbps; 2 x USB 3.0; 1 x RS-232; 1 x RS-485; 1 x DVI-I	2 x Ethernet 10/100/1000 Mbps; 2 x USB 3.0; 1 x RS-232; 1 x RS-485; 1 x DVI-I
Power supply	24 Vdc	24 Vdc	24 Vdc
Maximum current	1.2 A	1.5 A	1.7 A
Operating system	Windows Embedded Standard 7	Windows Embedded Standard 7	Windows Embedded Standard 7
Environment			
Agency certifications	UL/cUL Class I Div 2, Groups A, B, C, D, ATEX Zone 22	UL/cUL Class I Div 2, Groups A, B, C, D, ATEX Zone 22	UL/cUL Class I Div 2, Groups A, B, C, D, ATEX Zone 22
Degree of protection	Front: IP65, NEMA 4X (indoor), NEMA 12; Rear: IP20	Front: IP65, NEMA 4X (indoor), NEMA 12; Rear: IP20	Front: IP65, NEMA 4X (indoor), NEMA 12; Rear: IP20
Operating temperature	0 to +50 °C	0 to +50 °C	0 to +50 °C
Storage temperature	–20 to +60 °C	–20 to +60 °C	–20 to +60 °C
Relative air humidity	10 to 20% noncondensing	10 to 20% noncondensing	10 to 20% noncondensing
Shock	IEC 60068-2-27 15 g for 11 ms duration	IEC 60068-2-27 15 g for 11 ms duration	IEC 60068-2-27 15 g for 11 ms duration
Vibration	IEC 60068-2-6 5–9 Hz: 3.5 mm displacement 9–60 Hz: 0.15 mm displacement 60–150 Hz: 2 g acceleration	IEC 60068-2-6 5–9 Hz: 3.5 mm displacement 9–60 Hz: 0.15 mm displacement 60–150 Hz: 2 g acceleration	IEC 60068-2-6 5–9 Hz: 3.5 mm displacement 9–60 Hz: 0.15 mm displacement 60–150 Hz: 2 g acceleration
Software			
Development software	Visual Designer	Visual Designer	Visual Designer
Ability to run third-party software	Yes	Yes	Yes
Pre-licensed tags, drivers, Web sessions			
Standard models	4000 tags, 5 drivers, 1 Web session	4000 tags, 5 drivers, 1 Web session	4000 tags, 5 drivers, 1 Web session
Field upgradable max. tags, drivers, Web sessions	64,000 tags, 8 drivers, 1, 2, 4, 8, 16, 32, 64 or 128 Web sessions simultaneously	64,000 tags, 8 drivers, 1, 2, 4, 8, 16, 32, 64 or 128 Web sessions simultaneously	64,000 tags, 8 drivers, 1, 2, 4, 8, 16, 32, 64 or 128 Web sessions simultaneously

Galileo Software

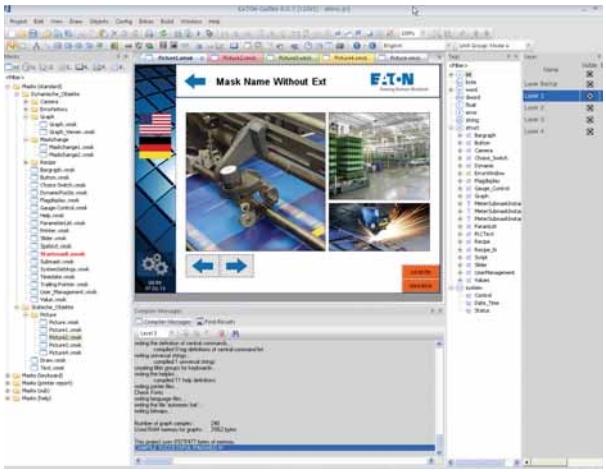

Contents

Description ***Page***

Operator Interface Software
Galileo Software
XSoft-CoDeSys-3 Software **V7-T5-21**
Visual Designer Software **V7-T5-22**

Galileo Software

Product Description

The Intuitive Visualization Tool

Galileo is an easy to learn yet powerful and extensive project design environment that can be used ideally in all system and machine building applications close to the machine and process.

Galileo is designed for use in all sectors and offers comprehensive project design tools. Galileo provides a full range of functions without any graduated restrictions on tags or screens, and is optimized for our XV operator interface panels.

Features

- Easy to learn and intuitive graphical user interface with a project overview window
- User-friendly project design with project simulation on development PC
- Different user interface styles
- Drag and drop positioning of objects, WYSIWYG (what you see is what you get)
- Simple, clear user guidance
- Tabular object properties, easy and fast assignment of attributes—copy and paste
- Convenient series assignment of texts and images to tags
- Many graphical objects such as bar graph, slide adjuster, graph plotter, curve chart, camera
- Anti-aliased gauge display
- Enhanced password handling with complex password and aging
- Extensive recipe handling
- Alarm handling with time stamp, history and diagnostics support with image display
- Multi-line display of alarm entries
- Online language selection
- Unicode support (also Asian character sets)
- Text import/export in XML format (example, Excel®)
- Brilliant image display, up to 65536 colors
- Import of 15 different image formats
- Dynamic objects
- Object parameter list, any number of data objects in a screen
- Dynamic unit of measure selection (example, °C–°F, inch–mm)
- Direct printing on panel (reports, forms)
- Many specific objects and system functions
- Simple import of PLC variables
- Full functionality always available, no graduated performance level

System Requirements

Windows XP and Windows 7

Product Selection

Galileo Development Software

Description	Catalog Number
Single-seat license	**SW-GALILEO-S**
Multiple-seat license	**SW-GALILEO-M**

XSoft-CoDeSys-3 Software

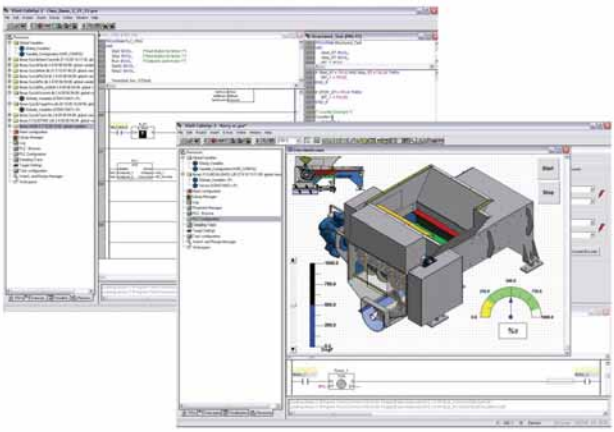

Contents

Description	*Page*
Operator Interface Software	
Galileo Software	**V7-T5-20**
XSoft-CoDeSys-3 Software	
Visual Designer Software	**V7-T5-22**

XSoft-CoDeSys-3 Software

Product Description

Combined Logic and Visualization Development

IEC 61131-3 Logic Programming

- Ladder Diagram (LD)
- Structured Text (ST)
- Sequential function chart (SFC)
- Function block diagram (FBD)
- Freely definable function block chart/continuous function chart (CFC)
- Instruction List (IL)

Target Visualization

Integrated design of Operator Interface screens for the XV series. Visualization and logic developed as part of the same project. Simplifies screen design and always keeps the Logic and visualization in synch.

Web Visualization

Optionally XSoft-CoDeSys-3 can automatically generate XML-based runtime screens to make the screens from the XV accessible remotely using a Web browser with a JavaScript plug-in such as Internet Explorer®, Firefox® and others.

Features

Project Development

- Automatic variable declaration
- On line editing
- Pop-up variable and function search/pick tools
- Automatic formatting and color coding of logic/ declaration text
- Re-usable Visual-Logic Function Blocks

Debugging and commissioning

XSoft-CoDeSys-3 offers you a number of important functions for debugging, testing and commissioning your XV applications quickly and efficiently.

All these features are available as soon as you log on to the XV (online mode) over an Ethernet connection.

Simulation

Users can also test the application when the XV is not connected to the process. This is possible thanks to the integrated online simulation feature. Simulation supports both the screens and logic that have been designed using XSoft-CoDeSys.

Advanced Features

- Up to 16 time and/or event driven tasks per project
- Each task can include multiple logic programs or subroutines
- Programs and screen designs can be exported and imported to support reuse
- Powerful, built-in function block libraries
- Ability to create user-defined function blocks
- Fieldbus Configurator for CANopen, PROFIBUS-DP and SmartWire-DT device I/O
- Ethernet and serial communication function blocks (OPC server, UDP, TCP/IP, FTP client/ server, Modbus Master/Slave, email, SMS, and more)
- 8-level password protection
- Web access selectable per screen
- System function libraries (OS Storage Card, and more)
- Online and historical alarms
- Online and historical trends

System Requirements

Windows XP and Windows 7 32-bit systems

Product Selection

XSoft-CoDeSys-3

XSoft-CoDeSys-3 Software

Description	Catalog Number
Single Seat License	**SW-XSOFT-CODESYS-3-S**
Multiple Seat License (3)	**SW-XSOFT-CODESYS-3-M**

Visual Designer Software

Contents

Description ***Page***

Operator Interface Software
- Galileo Software **V7-T5-20**
- XSoft-CoDeSys-3 Software **V7-T5-21**
- Visual Designer Software
  - Product Selection **V7-T5-23**

Visual Designer Software

Product Description

Advanced GUI Development, Made Easy

Time-saving solutions, lower costs.

With application development expense often outweighing the hardware expense, the demand to quickly design and implement advanced GUI solutions is greater than ever. Even advanced features such as data archiving, recipe management, multi-language, SQL database access, and Web serving are made easy through an elegant and modern user interface. Visual Designer's ease-of-use and time-saving features lower your total installed cost.

Features

Visual Designer is a software development package optimized for OEMs. New tools streamline the application development process, and the creation of Web-based applications has never been easier. In addition to basic monitor and control functionality, Visual Designer is packed with advanced features streamlining the design of sophisticated applications.

Advanced Features

- Pop-ups and group screens
- Full mathematical and logical evaluation
- Web browsing and document viewing
- Remote access and control without having to install software to the remote PC
- Database interfacing
- Historical alarms and events
- Historical data archiving and trending
- Recipe management
- Multi-language
- VB scripting
- Report generation
- Scheduling
- Resolution conversion
- Emailing and text messaging
- Launch and control of third-party applications

Advanced Development Features

- Conversion of legacy PanelMate configurations
- Optional PanelBuilder conversion utility
- Online configuration/ editing
- Advanced search and replace
- Automatic scaling of Web clients
- Customizable application symbols
- Reusable controls, images, and screens via indirect tag and/or PLC assignments

System Requirements

Windows XP and Windows 7 32-bit and 64-bit systems

Fully connected, Web-enabled

Today's operator interface applications range from basic monitor and control to high-end, feature-rich HMI software with Supervisory Control and Data Acquisition (SCADA). Customers demand communications capability with any network, PLC, Web client, and database. The answer: Eaton's Web-enabled Visual Designer operator interface software.

Web-based thin client

- Zero admin client—no need to install software on the remote PC
- Supports multiple simultaneous and independent Web clients
- Simplified security—the same local user accounts and passwords for viewing and control also apply remotely

Connectivity

- Extensive list of over 240 native communication drivers for PLCs, drives, and many other industrial and commercial devices
- Visual Designer software can interface to any relational database—access both local and enterprise functions such as MRP/ERP through databases such as Microsoft® Access, FoxPro, SQL Server, Oracle®, PI System® and many others
- Other connectivity tools provide redundancy capabilities, Real-Time Data Exchange, Centralized Alarm Management, and more

Open platform

- Visual Designer Software can host third-party ActiveX® and .NET controls and Visual Basic® programs
- In addition to Eaton's Operator Interface families, Visual Designer's runtime may be licensed on any 32 or 64-bit Windows PC

Interoperability

- Software is designed to open standards such as XML, OPC, ActiveX, .NET, ODBC, ADO, SOAP, DDE and more

Peace of mind

All of these capabilities—combined with Eaton's commitment to provide free technical support for both OI hardware and software—make it quick and easy to purchase, develop and deploy XP and XV operator interface solutions.

Product Selection

Visual Designer Software

Visual Designer

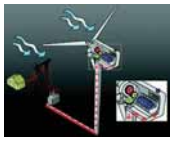

Visual Designer Development Software License Key

Description	Development Software Catalog Number	Runtime Software Catalog Number
Development license for CE hardware	**VISUALDCE**	—
Development license for PCs, XP-503 and CE hardware	**VISUALDXP**	—
Multiple development licenses for CE hardware (5-pack of VISUALDCE)	**VISUALDCE5**	—
Multiple development licenses for PCs, XP-503 and CE hardware (5-pack of VISUALDXP)	**VISUALDXP5**	—
Development license for all hardware platforms (for use with VISUALD-LIC-SERVER)	**VISUALDXPLS**	—
Multiple development licenses for use with VISUALD-LIC-SERVER (5-pack for use with VISUALDXPLS)	**VISUALDXP5LS**	—
License server key to serve development licenses over a LAN	**VISUALD-LIC-SERVER**	—
Visual Designer development software license and PC Runtime software licenses for a maximum of 64 k tags, 8 drivers, 1 Web session	**VISUALRTDEVPC**	**VISUALRTDEVPC**
For a PC Runtime license with a maximum of 64 k tags, 8 drivers, 1 Web session	—	**VISUALRTPC64K**
For a PC Runtime license with a maximum of 4 k tags, 5 drivers, 1 Web session	—	**VISUALRTPC4k**
For a PC Runtime license with a maximum of 1500 tags, 3 drivers, 1 Web session	—	**VISUALRTPC1500**
For a PC Runtime license with a maximum of 300 tags, 3 drivers, 1 Web session	—	**VISUALRTPC300**
For an XP-503 PC Runtime license with a maximum of 4 k tags, 5 drivers, 1 Web session	—	**N/A: Unit pre-licensed**
For an XP-503 PC Runtime license with up to 64 k tags, 8 drivers, and 128 Web sessions	—	**See upgrade list on next page**

Visual Designer

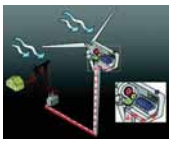

Software Updates and Upgrades

Description	Catalog Number
Update to current version Visual Designer development software for CE hardware	**VISUALDUPCE**
Update to current version Visual Designer development software PCs/XPe/CE	**VISUALDUPXP**
Update to current version of Visual Designer runtime license for PCs	**VISUALRTUPPC**
Upgrade from Visual Designer CE 1500 tag to 4000 tag runtime	**VISUALRT4KCE**
Upgrade from Visual Designer XP-500 4000 tag, 5 driver to 64 k tag, 8 driver runtime license	**VISUALRT64KXP**
Upgrade from Visual Designer development software CE to CE plus PC and XPe (64 k tag, 8 drivers)	**VISUALDCE2XP**
Visual Designer PanelBuilder conversion utility optional plug-in (requires Visual Designer software)	**VISUALDPBCU**
Visual Designer 1 additional Web thin client license for Internet Explorer: Total of 2	**VISUALWEB1**
Visual Designer 3 additional Web thin client licenses for Internet Explorer: Total of 4	**VISUALWEB3**
Visual Designer 7 additional Web thin client licenses for Internet Explorer Total of 8	**VISUALWEB7**
Visual Designer 15 additional Web thin client licenses for Internet Explorer: Total of 16	**VISUALWEB16**
Visual Designer 31 additional Web thin client licenses for Internet Explorer: Total of 32	**VISUALWEB32**
Visual Designer 63 additional Web thin client licenses for Internet Explorer: Total of 64	**VISUALWEB64**
Visual Designer 127 additional Web thin client licenses for Internet Explorer: Total of 128	**VISUALWEB128**
Visual Designer 1 additional Secure Viewer Thin Client license: Total of 2	**VISUALSVT2**
Visual Designer 3 additional Secure Viewer Thin Client license: Total of 4	**VISUALSVT4**
Visual Designer 7 additional Secure Viewer Thin Client license: Total of 8	**VISUALSVT8**
Visual Designer 15 additional Secure Viewer Thin Client license: Total of 16	**VISUALSVT16**
Visual Designer 31 additional Secure Viewer Thin Client license: Total of 32	**VISUALSVT32**
Visual Designer 63 additional Secure Viewer Thin Client license: Total of 64	**VISUALSVT64**
Visual Designer 127 additional Secure Viewer Thin Client license: Total of 128	**VISUALSVT128**
Visual Designer 1 additional SMA Thin Client license: Total of 2	**VISUALSMA2**
Visual Designer 3 additional SMA Thin Client license: Total of 4	**VISUALSMA4**
Visual Designer 7 additional SMA Thin Client license: Total of 8	**VISUALSMA8**
Visual Designer 15 additional SMA Thin Client license: Total of 16	**VISUALSMA16**
Visual Designer 31 additional SMA Thin Client license: Total of 32	**VISUALSMA32**
Visual Designer 63 additional SMA Thin Client license: Total of 64	**VISUALSMA64**
Visual Designer 127 additional SMA Thin Client license: Total of 128	**VISUALSMA128**
Visual Designer collaborative server	**VISUALCBSERVER**
Visual Designer business dashboard tool	**VISUALDASHBOARD**
Visual Designer communication package for electrical products	**VISUALDELECDRVS**

Power Supplies

6.1 General Purpose and Sensor Power Supplies

Product Selection Guide V7-T6-2
PSL Series V7-T6-4
PSC Series V7-T6-10
PSG Series V7-T6-16
ELC Series V7-T6-36
easyRelay Power Supply V7-T6-39
Sensor Power Supply V7-T6-43

Power Supplies

Contents

Description	*Page*
General-Purpose and Sensor Power Supplies	
PSL Series	**V7-T6-4**
PSC Series	**V7-T6-10**
PSG Series	**V7-T6-16**
ELC Series	**V7-T6-36**
easyRelay Power Supply	**V7-T6-39**
Sensor Power Supply	**V7-T6-43**

Product Selection Guide

Power Supply Series and Features

	PSL Series	**PSC Series**	**PSG Series**
Features	Universal AC input range 90–264 Vac (125–375 Vdc) 10 to 100 W power output at 24 Vdc Operating temperature range from –25 to +71 °C Output adjustable from 24 to 28 Vdc Support up to 3000 microfarads of load capacitance Protection Class 2, double Isolation (no earth connection required) resulting in low leakage current Short-circuit protection using Hicc-up mode, non-latching and auto-recovery MTBF greater than 500,000 hours ensures uptime and reliability Protection from overvoltage, short circuit, overcurrent and overtemperature conditions Plastic housings provide the durability required to withstand harsh environments Finger-safe terminals LED indicating light for DC OK simplifies troubleshooting Redundancy modules keep loads up and running in the event of a device failure NEC® Class 2 rated model 150% power surge output IP20 Protection degree	Ultra-compact size Full power from –25 to +71 °C operation Universal AC input voltage 100–240 Vac (120–375 Vdc) Up to 88.0% efficiency at 230 Vac Extreme low temperature cold start at –40 °C Overvoltage / overcurrent / overtemperature protections Class 1 Protection (with primary earth connection)	General-purpose 12 Vdc and 24 Vdc output for 1.25 A to 40 A loads Single-phase and three-phase inputs up to 500 Vac 150% power surge output Redundancy modules Buffer module DIN rail mount Rugged metal and plastic housing options Heavy-duty screw and finger-safe terminals Hazardous Location Class I, Division 2 rated models NEC Class 2 rated model Protection from overvoltage, overcurrent and overtemperature conditions
Product Selection	**Page V7-T6-5**	**Page V7-T6-11**	**Page V7-T6-17**
Technical Data and Specifications	**Page V7-T6-6**	**Page V7-T6-12**	**Page V7-T6-19**
Dimensions	**Page V7-T6-8**	**Page V7-T6-14**	**Page V7-T6-30**

Power Supply Series and Features, continued

	ELC Series	**easyRelay Power Series**	**Sensor Power Supplies**
Features	Compact, low cost 24 Vdc control for loads up to 2 A Plastic enclosure can be DIN rail or panel mounted Single-phase (100–240 Vac) input	Low profile power supplies for 12 Vdc or 24 Vdc applications 8 W, 30 W, 60 W or 100 W output power easyRelay styling provides optimal panel aesthetics Plastic enclosure can be DIN rail or panel mounted (with optional kit) CSA Class 1, Division 2 qualified Single-phase (100–240 Vac) input	27 Vdc supplies for tough sensor applications Rugged housings with integrated junction box for mounting outside of electrical enclosures Advanced diagnostic features
Product Selection	**Page V7-T6-37**	**Page V7-T6-40**	**Page V7-T6-44**
Technical Data and Specifications	**Page V7-T6-37**	**Page V7-T6-41**	**Page V7-T6-44**
Dimensions	**Page V7-T6-38**	**Page V7-T6-42**	**Page V7-T6-45**

PSL Series

Contents

Description	*Page*
PSL Series	
Catalog Number Selection	**V7-T6-5**
Product Selection	**V7-T6-5**
Technical Data and Specifications	**V7-T6-6**
Power Derating Curves	**V7-T6-8**
Dimensions	**V7-T6-8**
PSC Series	**V7-T6-10**
PSG Series	**V7-T6-16**
ELC Series	**V7-T6-36**
easyRelay Power Supply	**V7-T6-39**
Sensor Power Supply	**V7-T6-43**

PSL Series

Product Description

Eaton's single-phase Low Profile DIN Rail Power Supply series offers double isolated input with no earth connection required, resulting in low leakage current and a longer lifespan. The PSL series provides a universal input voltage range of 90–264 Vac, and a wide temperature range of –25 °C to +71 °C with greater than 80% efficiency. The low-profile series is certified to safety standard according to IEC/EN/UL 60950-1 Information Technology Equipment (ITE) and UL 508 Industrial Control Equipment (ICE). The series is also fully compliant with RoHS Directive 2011/65/EU for environmental protection. NEC Class 2 and Limited Power Source (LPS) approvals are available for this product.

Application Description

The Low Profile is part of the PSL DIN Rail Power Supply series, which is designed for use in compact cabinets for home automations and the food and beverage industry. Applications include communication networks, sensors, PLCs and many other electrical systems.

Features, Benefits and Functions

- Universal input voltage: 90–264 Vac or 125–375 Vdc
- Under 100 W power output at 24 Vdc
- Wide operating temperature range: –25 °C to +71 °C
- MTBF greater than 500,000 hours ensures uptime and reliability
- Protection from overvoltage, short circuit, overcurrent and over-temperature conditions
- Plastic housings provide the durability required to withstand harsh environments
- Finger-safe terminals
- LED indicating light for DC OK simplifies troubleshooting
- Redundancy modules keep loads up and running in the event of a device failure
- NEC Class 2 rated model
- 150% power surge output
- IP20 protection degree
- Protection Class 2, double isolation
- No earth connection required

Standards and Certifications

- UL/cUL Listed 60950
- UL 60950-1
- IEC
- NEC Class 2
- CE marked

c UL us Listed UL Listed CE

Note: The NEC Class 2 model is certified as an NEC Class 2 power source. This means that after a small startup window, the power supply cannot exceed a maximum of 100 W under any circumstances, including overload, short-circuit or internal failure.

It also reduces wiring, labor and additional system components acting as a short-circuit current limiter. The redundancy modules allow for two or more power supplies to be connected together to perform parallel or redundancy operation. Parallel operation or load sharing is when the load is split evenly between two or more power supplies. Redundancy operation is where *N* (number of power supplies) is required for the load and one additional power supply is connected in the event that one should fail.

Catalog Number Selection

Note: Catalog number selection breakdown shown below is for illustrative purposes only and not to be used to create new catalog number configurations.

PSL Series

PSL 10 E 24 R P

Series
PSL = Low Profile Power Supply

Output Power
10 = 10 W
30 = 30 W
60 = 60 W
100 = 100 W

Model
E = Single-phase

Output Voltage
24 = 24 Vdc

Terminals
R = Finger-safe

Housing
P = Plastic

Product Selection

PSL10E24RP

PSL Series

Power	Description	Catalog Number
24 Vdc output, single-phase power supplies (100–240 Vac nominal input)	10 W, 0.42 A output, plastic housing	**PSL10E24RP**
	30 W, 1.25 A output, plastic housing	**PSL30E24RP**
	60 W, 2.5 A output, plastic housing	**PSL60E24RP**
	100 W, 3.8 A output, plastic housing	**PSL100E24RP**

Technical Data and Specifications

PSL Series

	PSL10E24RP	PSL30E24RP	PSL60E24RP	PSL100E24RP
Input				
Nominal voltage	100–240 Vac	100–240 Vac	100–240 Vac	100–240 Vac / 125–250 Vdc
AC input range	90–264 Vac	90–264 Vac	90–264 Vac	90–264 Vac
DC input range	125–375 Vdc	125–375 Vdc	125–375 Vdc	125–375 Vdc
Input frequency range	47–63 Hz	47–63 Hz	47–63 Hz	47–63 Hz
Nominal current	<0.30 A at 115 Vac, <0.20 A at 230 Vac	<0.8 A at 115 Vac, <0.6 A at 230 Vac	<1.5 A at 115 Vac, <1.0 A at 230 Vac	<2.2 A at 115 Vac, <1.0 A at 230 Vac
Inrush current limitation	<15 A at 115 Vac, <30 A at 230 Vac	<25 A at 115 Vac, <50 A at 230 Vac	<30 A at 115 Vac, <60 A at 230 Vac	<30 A at 115 Vac, <60 A at 230 Vac
Mains buffering at nominal load	>10 ms at 115 Vac, >30 ms at 230 Vac	>25 ms at 115 Vac, >30 ms at 230 Vac	>16 ms at 115 Vac, >30 ms at 230 Vac	>10 ms at 115 Vac, >30 ms at 230 Vac
Turn-on time	<3 sec.	<3 sec.	<3 sec.	<1.5 sec. at 115 Vac, <1 sec. at 230 Vac
Internal fuse	T 1 A / 250 V	T 3.15 A / 250 V	T 3.15 A / 250 V	T 3.15 A / 250 V
Leakage current	<0.25 mA at 240 Vac	<0.25 mA at 240 Vac	<0.25 mA at 240 Vac	<0.25 mA at 240 Vac
Output				
Power	10 W	30 W	60 W	91.2W
Nominal output voltage	24 Vdc ±2%	24 Vdc ±2%	24 Vdc ±2%	24 Vdc ±2%
Adjustment range	24–28 Vdc	24–28 Vdc	24–28 Vdc	22–24 Vdc
Nominal current	0.42A	1.25 A	2.5 A	3.8 A
Derating	>55 °C (2.5% / °C) in vertical	>55 °C (2.5% / °C) in vertical	>55 °C (2.5% / °C) in vertical	>55 °C (2.5% / °C) in vertical
Power derating—horizontal mounting	N/A	N/A	N/A	N/A
Startup with capacitive loads	Max. 3,000 µF	Max. 3,000 µF	Max. 3,000 µF	Max. 3,000 µF
Max. power dissipation idling / nominal load approx.	2 W	3.8 W	8.5 W	12 W
Efficiency	>80.0% at 115 Vac and 230 Vac	>83.0% at 115 Vac and 230 Vac	>86.0% at 115 Vac and 230 Vac	>85.0% at 115 Vac, >87.0% at 230 Vac
Residual ripple / peak switching (20 M Hz)	<50mVpp / 150mVpp	<50 mVpp / <150 mVpp	<50 mVpp / <150 mVpp	<50 mVpp / <150 mVpp
Parallel operation	PSG480R24RM / PSG960R24RM / With o-ring diode	PSG480R24RM / PSG960R24RM / With o-ring diode	PSG480R24RM / PSG960R24RM / With o-ring diode	PSG480R24RM / PSG960R24RM / With o-ring diode
Galvanic isolation				
Input / output	3.0K Vac	3.0K Vac	3.0K Vac	3.0K Vac
Input / ground	N/A	N/A	N/A	N/A
Output / ground	N/A	N/A	N/A	N/A
General / physical data				
Housing material	Plastic (PC), enclosed	Plastic (PC), enclosed	Plastic (PC), enclosed	Plastic (PC), enclosed
Signals	Green LED DC OK	Green LED DC OK	Green LED DC OK	Green LED DC OK
MTBF	>500,000 hr	>500,000 hr	>500,000 hr	>500,000 hr
Dimensions (length)	91 mm	91 mm	91 mm	91 mm
Dimensions (width)	18 mm	53 mm	71 mm	89.9 mm
Dimensions (height)	55.6 mm	55.6 mm	55.6 mm	55.6 mm
Weight (kg)	0.065 kg	0.14 kg	0.24 kg	0.35 kg
Terminals	Finger-safe	Finger-safe	Finger-safe	Finger-safe
Wire size	AWG 26-12	AWG 24-12	AWG 22-12	AWG 22-12 (1 piece) AWG 24-12 (2 pieces)
Operating temperature	–25 °C to +71 °C	–25 °C to +71 °C	–25 °C to +71 °C	–25 °C to +71 °C
Storage temperature	–25 °C to +85 °C	–25 °C to +85 °C	–25 °C to +85 °C	–25 °C to +85 °C
Operating humidity	<95% RH	<95% RH	<95% RH	<95% RH

PSL Series, continued

	PSL10E24RP	PSL30E24RP	PSL60E24RP	PSL100E24RP
General / physical data, continued				
Vibration	IEC60068–2–6, Sine wave: 10–500 Hz at 19.6 m/S² (2G peak); 10 min per cycle, 60 min for all X, Y, Z directions	IEC60068–2–6, Sine wave: 10–500 Hz at 19.6 m/S² (2G peak); 10 min per cycle, 60 min for all X, Y, Z directions	IEC60068–2–6, Sine wave: 10–500 Hz at 19.6 m/S² (2G peak); 10 min per cycle, 60 min for all X, Y, Z directions	IEC60068–2–6, Sine wave: 10–500 Hz at 19.6 m/S² (2G peak); 10 min per cycle, 60 min for all X, Y, Z directions
Shock (operating)	IEC60068–2–27, Half sine wave: 4 G for a duration of 22 ms, 3 shocks for each 3 directions, 9 times in total	IEC60068–2–27, Half sine wave: 4 G for a duration of 22 ms, 3 shocks for each 3 directions, 9 times in total	IEC60068–2–27, Half sine wave: 4 G for a duration of 22 ms, 3 shocks for each 3 directions, 9 times in total	IEC60068–2–27, Half sine wave: 4 G for a duration of 22 ms, 3 shocks for each 3 directions, 9 times in total
Pollution degree	2	2	2	2
Altitude	2000 m	2000 m	2000 m	2000 m
Certification and protection				
Safety entry low voltage	SELV (EN 60950)	SELV (EN 60950)	SELV (EN 60950)	SELV (EN 60950)
Electrical safety (of information technology equipment)	UL/C–UL recognized to UL 60950–1	UL/C–UL recognized to UL 60950–1	UL/C–UL recognized to UL 60950–1	UL/C–UL recognized to UL 60950–1
Industrial control equipment	UL/C–UL listed to UL 508	UL/C–UL listed to UL 508	UL/C–UL listed to UL 508	UL/C–UL listed to UL 508
Class 2 power supply	UL/C–UL recognized to UL 60950–1	UL/C–UL recognized to UL 60950–1	UL/C–UL recognized to UL 60950–1	UL/C–UL recognized to UL 60950–1
CE	In conformance with EMC directive 2014/30/EU and low-voltage directive 2014/35/EU	In conformance with EMC directive 2014/30/EU and low-voltage directive 2014/35/EU	In conformance with EMC directive 2014/30/EU and low-voltage directive 2014/35/EU	In conformance with EMC directive 2014/30/EU and low-voltage directive 2014/35/EU
Immunity	EN 55024 (EN 61000–4–2, 3, 4, 5, 6, 8,11)	EN 55024 (EN 61000–4–2, 3, 4, 5, 6, 8,11)	EN 55024 (EN 61000–4–2, 3, 4, 5, 6, 8,11)	EN 55024 (EN 61000–4–2, 3, 4, 5, 6, 8,11)
Emissions	EN 55032, EN 61000–3–2 Class A, EN 61000–3–3	EN 55032, EN 61000–3–2 Class A, EN 61000–3–3	EN 55032 Class A, EN 61000–3–2 Class A, EN 61000–3–3,	EN 55032, EN 61000–3–2 Class A, EN 61000–3–3,
RoHS compliant	Yes	Yes	Yes	Yes
Safety and protection				
Current limitation at short-circuits approx.	I_{surge} = 150% of Po_{Max} typically	I_{surge} = 150% of Po_{Max} typically	I_{surge} = 150% of Po_{Max} typically	I_{surge} = 150% of Po_{Max} typically
Surge voltage protection against internal surge voltages	Yes	Yes	Yes	Yes
Protection degree	IP20	IP20	IP20	IP20
Safety class	Class II (No primary earth connection is required)	Class II without PE connection	Class II without PE connection	Class II without PE connection

Power Derating Curves

Vertical Mounting Position PSL10E24RP

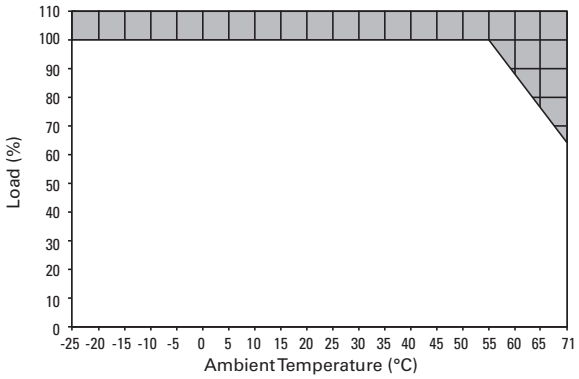

Vertical Mounting Position PSL60E24RP

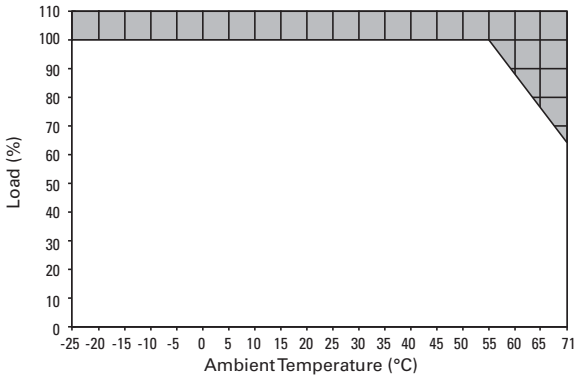

Vertical Mounting Position PSL30E24RP

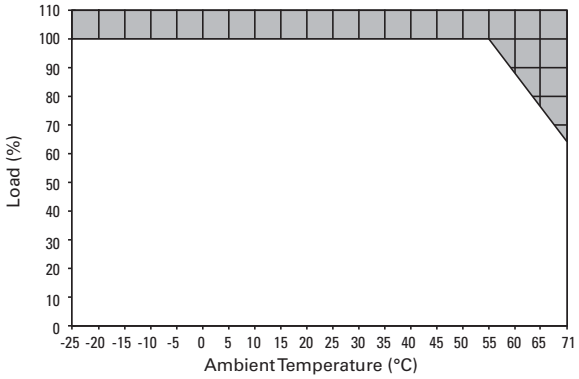

Vertical Mounting Position PSL100E24RP

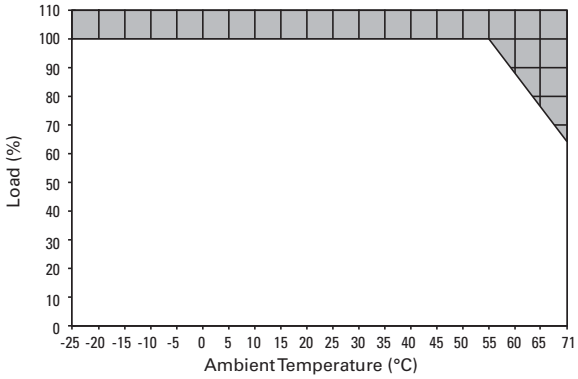

Dimensions

Approximate Dimensions in mm

Note: Dimensions are for reference only.

PSL10E24RP

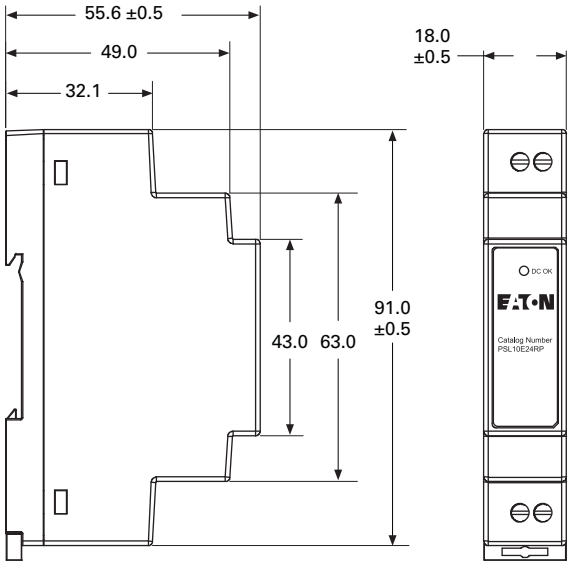

PSL30E24RP

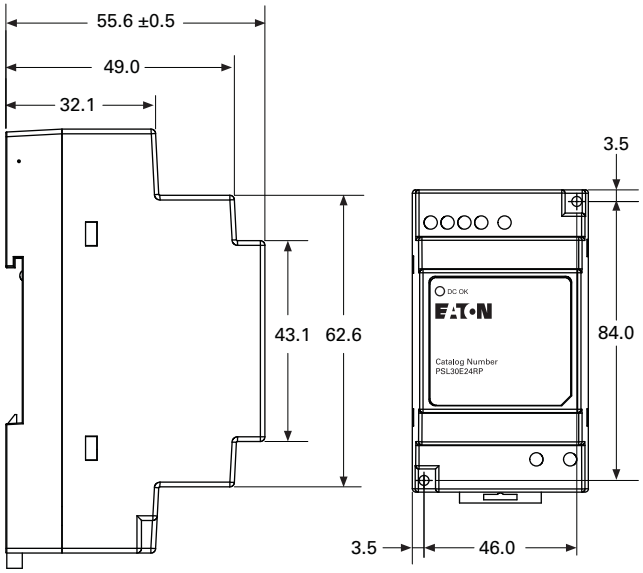

Approximate Dimensions in mm

Note: Dimensions are for reference only.

PSL60E24RP

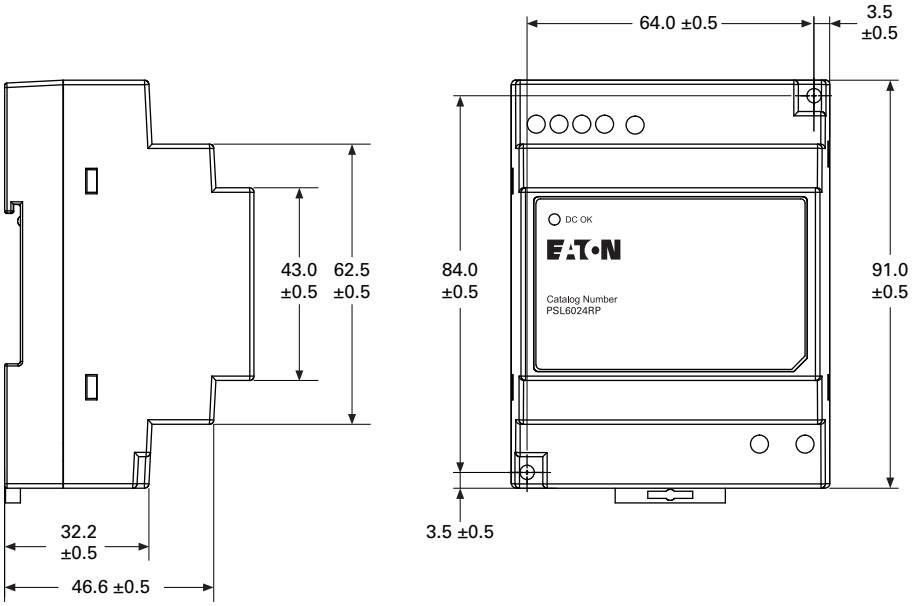

PSL100E24RP

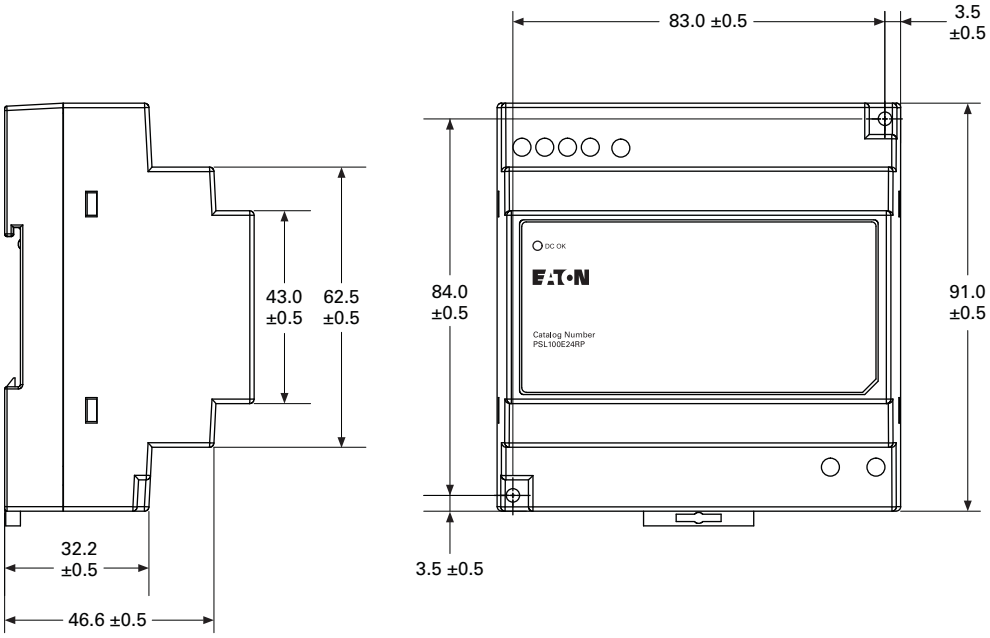

PSC Series

Contents

Description	*Page*
PSL Series	**V7-T6-4**
PSC Series	
Catalog Number Selection	**V7-T6-11**
Product Selection	**V7-T6-11**
Technical Data and Specifications	**V7-T6-12**
Power Derating Curves	**V7-T6-14**
Dimensions	**V7-T6-14**
PSG Series	**V7-T6-16**
ELC Series	**V7-T6-36**
easyRelay Power Supply	**V7-T6-39**
Sensor Power Supply	**V7-T6-43**

PSC Series

Product Description

The PSC Compact series operates with universal AC input range and offers full power up to 55 °C. The output is adjustable from 24 to 28 volts and can support up to 3000 microfarads of load capacitance. All models in the series are certified according to IEC/EN/UL 60950-1 Information Technology Equipment (ITE) and UL 508 Industrial Control Equipment (ICE). The series is also fully compliant with RoHS Directive 2011/65/EU for environmental protection. NEC Class 2 and Limited Power Source (LPS) approvals are available for this product.

Application Description

The ultra-compact and competitively priced Eaton Compact DIN Rail Power Supply series is designed for industrial applications requiring highly reliable power supply within a tight space. Simple to operate with HMI displays and industrial ethernet.

Features, Benefits and Functions

- 30 W, 50 W and 100 W ratings
- Ultra-compact size
- Universal AC input voltage 100–240 Vac (120–375 Vdc)
- Up to 87% efficiency at 230 Vac
- Extreme low temperature cold start at –40 °C
- Overvoltage / overcurrent / over-temperature protections
- Under 100 W power output at 24 Vdc
- Wide operating temperature range: –20 °C to +70 °C
- Storage temperature: –20 °C to +85 °C
- MTBF greater than 350,000 hours ensures uptime and reliability
- Protection from overvoltage, short circuit, overcurrent and over temperature conditions
- Plastic housings provide the durability required to withstand harsh environments
- Finger-safe terminals
- LED indicating light for DC OK simplifies troubleshooting
- Redundancy modules keep loads up and running in the event of a device failure
- NEC Class 2 rated model ①
- 150% power surge output
- IP20 protection degree
- Earth connection is required
- A green LED indicates output is present

Standards and Certifications

- UL 508
- NEC Class 2
- CE marked
- RoHS compliant

Listed

Note

① The NEC Class 2 model is certified as an NEC Class 2 power source. This means that after a small startup window, the power supply cannot exceed a maximum of 100 W under any circumstances, including overload, short-circuit or internal failure.

Catalog Number Selection

Note: Catalog number selection breakdown shown below is for illustrative purposes only and not to be used to create new catalog number configurations.

PSC Series

PSC 10 E 24 R P

Series
PSC = Compact Power Supply

Output Power
30 = 30 W
50 = 50 W
100 = 100 W

Model
E = Single-phase

Output Voltage
24 = 24 Vdc

Terminals
R = Finger-safe

Housing
P = Plastic

Product Selection

PSC100E24RP

PSC Series

Power	Description	Catalog Number
24 Vdc output single-phase power supplies (100–240 Vac nominal input)	30 W, 1.25 A output, plastic housing	**PSC30E24RP**
	50 W, 2.1 A output, plastic housing	**PSC50E24RP**
	100 W, 4.0 A output, plastic housing	**PSC100E24RP**

Technical Data and Specifications

PSC Series

	PSC30E24RP	PSC50E24RP	PSC100E24RP
Input			
Nominal voltage	100–240 Vac / 50–60 Hz	100–240 Vac / 50–60 Hz	100–240 Vac / 50–60 Hz
AC input range	85–264 Vac	85–264 Vac	85–264 Vac
DC input range	120–375 Vdc	120–375 Vdc	120–375 Vdc
Input frequency range	47–63 Hz	47–63 Hz	47–63 Hz
Nominal current	<0.8 A at 115 Vac, <0.4 A at 230 Vac	<1.0 A at 115 Vac, <0.6 A at 230 Vac	<1.2 A at 115 Vac, <0.6 A at 230 Vac
Inrush current limitation	<35 A at 115 Vac, <60 A at 230 Vac	<35 A at 115 Vac, <60 A at 230 Vac	<35 A at 115 Vac, <60 A at 230 Vac
Mains buffering at nominal load	20 ms typ. at 115 Vac, 100 ms typ. at 230 Vac	20 ms typ. at 115 Vac, 90 ms typ. at 230 Vac	25 ms typ. at 115 Vac, 50 ms typ. at 230 Vac
Turn-on time	<3 sec. at 115 Vac, <1.6 sec. at 230 Vac	<3 sec. at 115 Vac, <1.5 sec. at 230 Vac	<3 sec. at 115 Vac, <1.5 sec. at 230 Vac
Internal fuse	T 3.15 A / 250 V	T 3.15 A / 250 V	T 3.15 A / 250 V
Leakage current	<1 mA at 240 Vac	<1 mA at 240 Vac	<1 mA at 240 Vac
Output			
Power	30 W	50 W	91.2 / 96 W
Nominal output voltage	24 Vdc ±2%	24 Vdc ±2%	24 Vdc ±2%
Adjustment range	24–28 Vdc (Maximum power ≤ 30 W)	24–28 Vdc (Maximum power ≤ 50 W)	22–24 Vdc (Maximum power ≤ 91.2W)
Nominal current	1.25 A	2.1 A	3.8 A
Derating	–10 °C to –20 °C (2% / °C), >55 °C (3.33% / °C) in Vertical	–10 °C to –20 °C (2% / °C), >55 °C (3.33% / °C) in Vertical	–10 °C to –20 °C (2% / °C), >55 °C (3.33% / °C) in Vertical
Power derating–horizontal mounting	N/A	N/A	N/A
Startup with capacitive loads	Max. 3,000 µF	Max. 3,000 µF	Max. 3,000 µF
Max. power dissipation idling / nominal load approx.	0.5 W / 4.5 W	0.5 W / 7 W	0.4 W / 10 W
Efficiency	87.0% typ. at 115 Vac, 88.0% typ. at 230 Vac	86.0% typ. at 115 Vac, 88.0% typ. at 230 Vac	87.0% typ. at 115 Vac, 89.0% typ. at 230 Vac
Residual ripple/peak switching (20 M Hz)	<75 mVpp	<75 mVpp	<75 mVpp
Parallel operation	PSG480R24RM / PSG960R24RM / With o-ring Diode	PSG480R24RM / PSG960R24RM / With o-ring Diode	PSG480R24RM / PSG960R24RM / With o-ring Diode
Galvanic isolation			
Input/output	3.0K Vac	3.0K Vac	3.0K Vac
Input/ground	3.0K Vac	3.0K Vac	3.0K Vac
Output/ground	0.5K Vac	0.5K Vac	0.5K Vac
General / physical data			
Housing material	Plastic (PC), enclosed	Plastic (PC), enclosed	Plastic (PC), enclosed
Signals	Green LED DC OK	Green LED DC OK	Green LED DC OK
MTBF	>350,000 hr	>350,000 hr	>350,000 hr
Dimensions (length)	75 mm	75 mm	75 mm
Dimensions (width)	21 mm	30 mm	45 mm
Dimensions (height)	89.5 mm	89.5 mm	100 mm
Weight (kg)	0.11 kg	0.18 kg	0.325 kg
Terminals	Finger safe	Finger safe	Finger safe
Wire size	AWG 22-12 / AWG 20-12	AWG 22-12 / AWG 20-12	AWG 22-12 / AWG 20-12
Operating temperature	–20 °C to +70 °C	–20 °C to +70 °C	–20 °C to +70 °C
Storage temperature	–40 °C to +85 °C	–40 °C to +85 °C	–40 °C to +85 °C
Operating humidity	5 to 95% RH	5 to 95% RH	5 to 95% RH

PSC Series, continued

	PSC30E24RP	PSC50E24RP	PSC100E24RP
General / physical data, continued			
Vibration			
Operating	IEC60068–2–6, sine wave: 10 Hz to 500 Hz at 19.6 m/s²; displacement of 0.35 mm, 60 min. per axis for all X, Y, Z directions	IEC60068–2–6, sine wave: 10 Hz to 500 Hz at 19.6 m/s²; displacement of 0.35 mm, 60 min. per axis for all X, Y, Z directions	IEC60068–2–6, sine wave: 10 Hz to 500 Hz at 19.6 m/s²; displacement of 0.35 mm, 60 min. per axis for all X, Y, Z directions
Non-operating	IEC60068–2–6, Random: 5 Hz to 500 Hz (2.09 Grms); 20 min. per axis for all X, Y, Z directions	IEC60068–2–6, Random: 5 Hz to 500 Hz (2.09 Grms); 20 min. per axis for all X, Y, Z directions	IEC60068–2–6, Random: 5 Hz to 500 Hz (2.09 Grms); 20 min. per axis for all X, Y, Z directions
Shock (operating)			
Operating	IEC60068–2–27, half sine wave: 10 G for a duration of 11 ms, shock for 1 direction (X axis)	IEC60068–2–27, half sine wave: 10 G for a duration of 11 ms, shock for 1 direction (X axis)	IEC60068–2–27, half sine wave: 10 G for a duration of 11 ms, shock for 1 direction (X axis)
Non-operating	IEC60068–2–27, half sine wave: 50 G for a duration of 11 ms, 3 shocks for each 3 directions	IEC60068–2–27, half sine wave: 50 G for a duration of 11 ms, 3 shocks for each 3 directions	IEC60068–2–27, half sine wave: 50 G for a duration of 11 ms, 3 shocks for each 3 directions
Pollution degree	2	2	2
Altitude	2000 m	2000 m	2000 m
Certification and protection			
Safety entry low voltage	SELV (EN 60950)	SELV (EN 60950)	SELV (EN 60950)
Electrical safety (of information technology equipment)	N/A	N/A	N/A
Industrial control equipment	UL/C–UL listed to UL 508	UL/C–UL listed to UL 508	UL/C–UL listed to UL 508
Class 2 power supply	UL/C–UL listed to UL 508	UL/C–UL listed to UL 508	UL/C–UL listed to UL 508
CE	In conformance with EMC directive 2014/30/EU and low-voltage directive 2014/35/EU	In conformance with EMC directive 2014/30/EU and low-voltage directive 2014/35/EU	In conformance with EMC directive 2014/30/EU and low-voltage directive 2014/35/EU
Immunity	EN 55024, EN 61000–6–1, EN 61000–6–2 (EN 61000–4–2, 3, 4, 5, 6, 8, 11)	EN 55024, EN 61000–6–1, EN 61000–6–2 (EN 61000–4–2, 3, 4, 5, 6, 8, 11)	EN 55024, EN 61000–6–1, EN 61000–6–2 (EN 61000–4–2, 3, 4, 5, 6, 8, 11)
Emissions	EN 55032, EN 55011, EN 61000–3–3, EN 61000–6–3, EN 61000–6–4	EN 55032, EN 55011, EN 61000–3–3, EN 61000–6–3, EN 61000–6–4	EN 55032, EN 55011, EN 61000–3–3, EN 61000–6–3, EN 61000–6–4
RoHS compliant	Yes	Yes	Yes
Safety and protection			
Current limitation at short–circuits approx.	N/A	N/A	N/A
Surge voltage protection against internal surge voltages	No	No	No
Protection degree	IP20	IP20	IP20
Safety class	Class I with primary earth connection	Class I with primary earth connection	Class I with primary earth connection

Power Derating Curves

Vertical Mounting Position PSC30E24RP

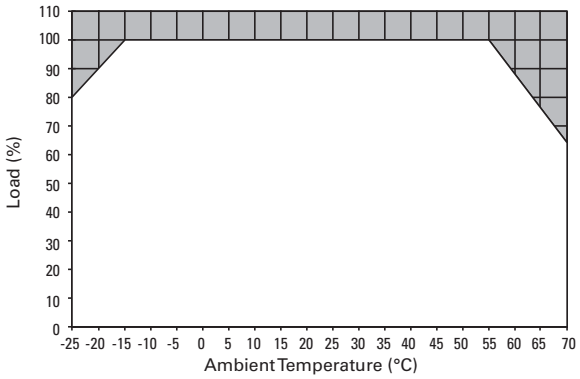

Vertical Mounting Position PSC50E24RP

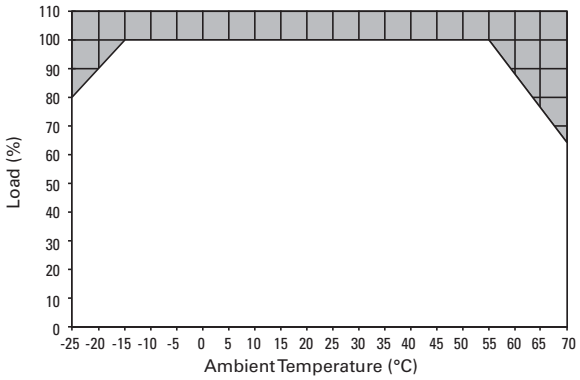

Vertical Mounting Position PSC100E24RP

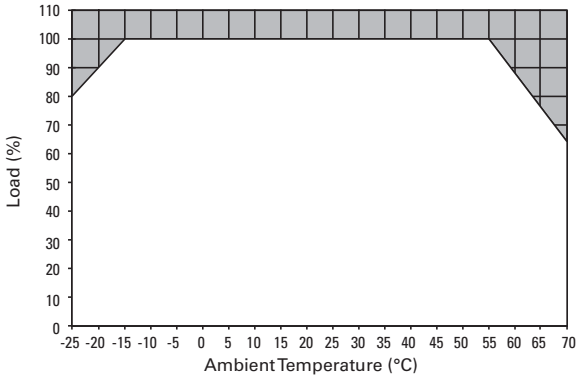

Dimensions

Approximate Dimensions in mm

Note: Dimensions are for reference only.

PSC30E24RP

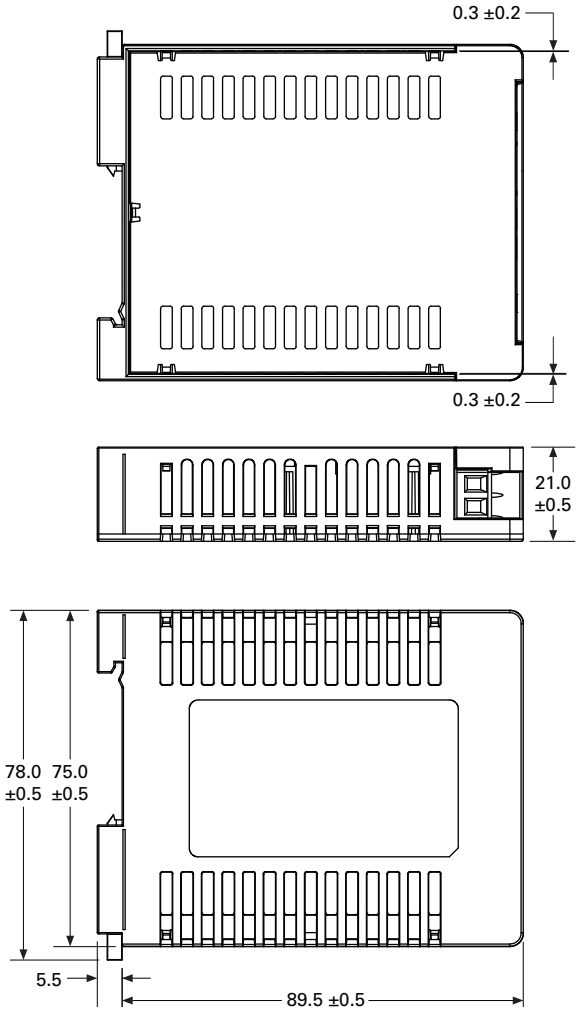

Approximate Dimensions in mm

Note: Dimensions are for reference only.

PSC50E24RP

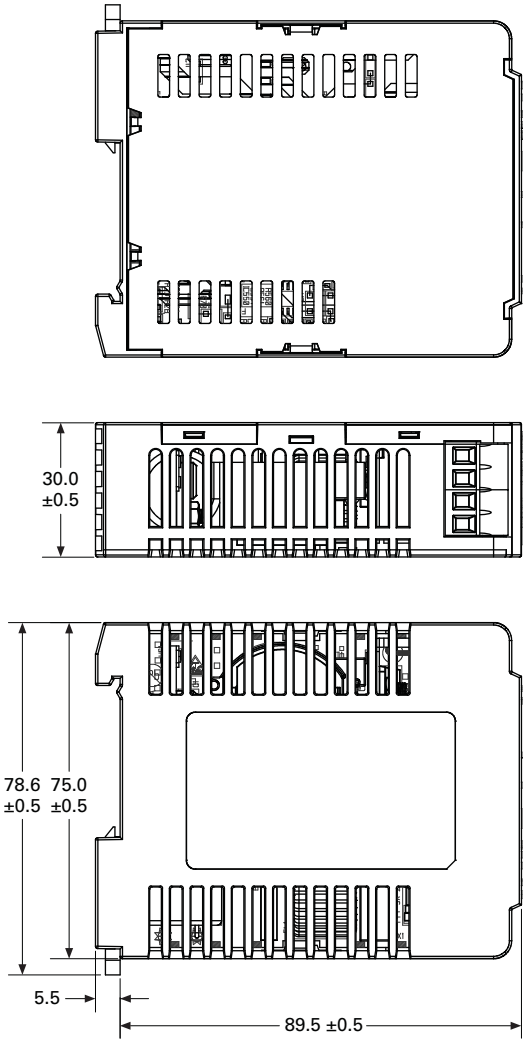

PSC100E24RP

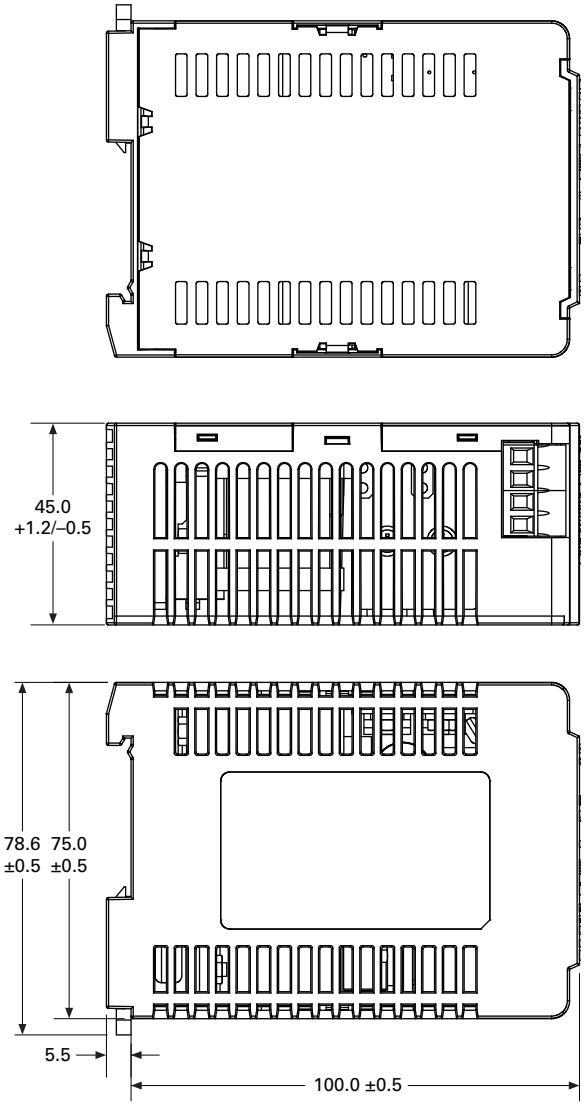

PSG Series

Contents

Description	*Page*
PSL Series	**V7-T6-4**
PSC Series	**V7-T6-10**
PSG Series	
Catalog Number Selection	**V7-T6-17**
Product Selection	**V7-T6-18**
Technical Data and Specifications	**V7-T6-19**
Power Derating Curves	**V7-T6-27**
Dimensions	**V7-T6-30**
ELC Series	**V7-T6-36**
easyRelay Power Supply	**V7-T6-39**
Sensor Power Supply	**V7-T6-43**

6

PSG Series

Product Description

Eaton's PSG Series of power supplies is designed to be a high-performance, high-quality line of products covering a majority of 12 Vdc and 24 Vdc control applications. With global certifications, a compact size and an impressive operating temperature range, the PSG Series fits a wide variety of applications at a competitive price.

Our expansive 22 model offering is able to provide solutions for most applications with PSG outputs ranging from 12 Vdc at 1.25 A up to 24 Vdc at 40 A, plus redundancy and buffer modules to ensure uptime.

Application Description

The PSG Series is a line of general-purpose power supplies for use in a wide variety of industrial control applications. Applications include communication networks, sensors, PLCs and many other electrical systems. Each model is equipped with the options of a rugged metal or plastic housing, heavy-duty screw or finger-safe terminals and a variety of protection features, making the PSG one of the most versatile industrial power supply lines on the market.

Features, Benefits and Functions

- Universal input voltages: 100–240 Vac for single-phase units, 400–500 Vac for three-phase units
- General-purpose 12 Vdc and 24 Vdc adjustable output
- 150% power surge output
- Wide operating temperature range: –25 °C to +80 °C
- MTBF up to 1,000,000 hours ensures uptime and reliability
- Protection from overvoltage, overcurrent and over-temperature conditions
- Rugged aluminum and plastic housings provide the durability required to stand up to harsh environments
- All-metal DIN rail mounting hardware
- Heavy-duty screw and finger-safe terminals
- LED indicating light for DC OK simplifies troubleshooting
- Conformal coated electronics
- Hazardous Location Class I, Division 2 rated models
- UL/NEC® Class 2 rated model
- Redundancy modules keep loads up and running in the event of a device failure
- Buffer module has the stored power needed to keep loads running through a short duration power failure
- Three-year standard warranty

Standards and Certifications

- cULus listed—UL 508
- CSA listed—CSA 22.2 No. 107.1-01
- Hazardous Location, Class I, Div. 2, Groups A, B, C, D
- IEC
- EN
- NEC Class 2
- UL Class 2
- CE marked
- RoHS compliant

Listed C US

Note: Some models may not carry all certifications listed.

Catalog Number Selection

Note: Catalog number selection breakdown shown below is for illustrative purposes only and not to be used to create new catalog number configurations.

PSG Series

PSG 240 F 24 R M

Series
PSG = PSG Power Supply

Output Power	
15 = 15 W	**120** = 120 W
30 = 30 W	**240** = 240 W
60 = 60 W	**480** = 480 W
100 = 100 W	**960** = 960 W

Model
E = Single-phase
F = Three-phase
R = Redundancy module
B = Buffer module
N = NEC Class 2

Output Voltage
24 = 24 Vdc
12 = 12 Vdc
Blank = 24 Vdc

Terminals
S = Screw
R = Finger-safe
Blank = Screw

Housing
M = Aluminum
P = Plastic
Blank = Aluminum

Note: Not all combinations are available. See Pages **V7-T6-19**–**V7-T6-26** for all available combinations.

Product Selection

PSG Series

Screw Type Terminals—Connections for those that require multiple types of terminations and lug connections.

	Power	Description	Catalog Number
	Screw Type Terminals		
PSG100E12SM	12 Vdc output single-phase power supplies (100–240 Vac nominal input)	15 W 1.25 A output, plastic housing	**PSG15E12SP**
		30 W 2.5 A output, plastic housings	**PSG30E12SP**
		60 W 5 A output, aluminum housing	**PSG60E12SM**
		100 W 8.33 A output, aluminum housing	**PSG100E12SM**
PSG60E	24 Vdc output single-phase power supplies (100–240 Vac nominal input)	60 W 2.5 A output, aluminum housing	**PSG60E**
		60 W 2.5 A output, plastic housing	**PSG60E24SP**
		120 W 5 A, aluminum housing	**PSG120E**
		240 W 10 A, aluminum housing	**PSG240E**
		480 W 20 A, aluminum housing	**PSG480E**

Finger-Safe Terminals—Connections for those that require IP20 terminals for all your safety solutions

	Power	Description	Catalog Number
	Finger-Safe Terminals		
PSG60E24RM	24 Vdc output single-phase power supplies (100–240 Vac nominal input)	60 W 2.5 A output, aluminum housing	**PSG60E24RM**
		120 W 5 A, aluminum housing	**PSG120E24RM**
		240 W 10 A, aluminum housing	**PSG240E24RM**
		480 W 20 A, aluminum housing	**PSG480E24RM**
		60 W 2.5 A output, plastic housing, UL/NEC Class 2	**PSG60N24RP**
PSG480F24RM	24 Vdc output, three-phase power supplies (400–500 Vac nominal input)	60 W 2.5 A, aluminum housing	**PSG60F24RM**
		120 W 5 A, aluminum housing	**PSG120F24RM**
		240 W 10 A, aluminum housing	**PSG240F24RM**
		480 W 20 A, aluminum housing	**PSG480F24RM**
		960 W 40 A, aluminum housing	**PSG960F24RM**
PSG480B24RM	Module power supplies (24 Vdc input)	Buffer module, 480 W 20 A output, aluminum housing	**PSG480B24RM**
		Redundancy module, 480 W <20 A output, aluminum housing	**PSG480R24RM**
		Redundancy module, 960 W <40 A output, aluminum housing	**PSG960R24RM**

Technical Data and Specifications

PSG Series

	Single-Phase PSG15E12SP	PSG30E12SP	PSG60E12SM	PSG100E12SM	PSG60E	PSG60E24SP	PSG60E24RM
Input							
Nominal voltage	100–240 Vac	100–240 Vac	100–240 Vac	100–240 Vac	100–240 Vac	100–240 Vac	100–240 Vac
AC input range	85–264 Vac	85–264 Vac	85–264 Vac	85–264 Vac	85–264 Vac	85–264 Vac	85–264 Vac
DC input range	120–375 Vdc	120–375 Vdc	120–375 Vdc	120–375 Vdc	120–375 Vdc	120–375 Vdc	120–375 Vdc
Frequency	47–63 Hz	47–63 Hz	47–63 Hz	47–63 Hz	47–63 Hz	47–63 Hz	47–63 Hz
Nominal current ①	<0.37 A	<0.7 A	<1.35 A	<2.5 A	1.1 A	<1.10 A	<1.4 A
Inrush current limitation ①	<30 A	<30 A	<50 A	<100 A	30 A	<40 A	<20 A
Internal fuse	T3.15 AH / 250 V	T3.15 AH / 250 V	T3.15 AH / 250 V	T3.15 AH / 250 V	T3.15 AH / 250 V	T3.15 AH / 250 V	T3.15 AH / 250 V
External fusing	4 A or 6 A	4 A or 6 A	6 A, 10 A or 16 A	6 A, 10 A or 16 A	6 A, 10 A or 16 A	6 A, 10 A or 16 A	6 A, 10 A or 16 A
Leakage current	<1 mA	<1 mA	<1 mA	<1 mA	<1 mA	<1 mA	<1 mA
Output							
Power	15 W	30 W	60 W	100 W	60 W	60 W	60 W
Nominal output voltage	12 Vdc ±2%	12 Vdc ±2%	12 Vdc ±2%	12 Vdc ±2%	24 Vdc ±2%	24 Vdc ±2%	24 Vdc ±2%
Adjustment range	11–14 Vdc	11–14 Vdc	11–14 Vdc	11–14 Vdc	22–28 Vdc	22–28 Vdc	24–28 Vdc
Nominal current	1.25 A	2.5 A	5 A	8.33 A	2.5 A	2.5 A	2.5 A
Startup with capacitive loads	Max. 5000 µF	Max. 6600 µF	Max. 8000 µF	Max. 10,000 µF	Max. 8000 µF	Max. 8000 µF	Max. 8000 µF
Efficiency	>84% at 115 Vac, >83% at 230 Vac	>85% at 115 Vac and 230 Vac	>85% at 115 Vac and 230 Vac	>85.5% at 115 Vac, >87.5% at 230 Vac	>85% typ	>86% at 115 Vac, >87% at 230 Vac	>90% at 115 Vac and 230 Vac
Current surge	1.875 A	3.75 A	7.5 A	12.495 A	3.75 A	3.75 A	3.75 A
Current surge time	3 s	3 s	3 s	3 s	1 s (at 10 s intervals)	3 s	5 s
Residual ripple/peak switching (20 MHz)	<100 mVpp	<100 mVpp	<100 mVpp	<100 mVpp	<50 mV / <240 mVpp	<50 mV / <240 mVpp	<50 mVpp / <150 mVpp
Turn-on time	<2.5 s	<2.5 s	<2.5 s	<0.6s	<2.5 s	<3 s	<2s
Mains buffering at nominal load (typ.) ①	>22 ms	>22 ms	>22 ms	>22 ms	>20 ms	>20 ms	>20 ms
Parallel operation	With o-ring diode	With o-ring diode	With o-ring diode	With o-ring diode	PSG480R24RM / PSG960R24RM / With o-ring diode	PSG480R24RM / PSG960R24RM / With o-ring diode	PSG480R24RM / PSG960R24RM / With o-ring diode
Galvanic Isolation							
Input/output	4 k Vac	4 k Vac	4 k Vac	4 k Vac	4 k Vac (type test) / 3 k Vac (routine test)	4 k Vac	4 k Vac
Input/ground	1.5 k Vac	1.5 k Vac	1.5 k Vac	1.5 k Vac	1.5 k Vac (type test) / 1.5 k Vac (routine test)	1.5 k Vac	1.5 k Vac
Output/ground	1.5 k Vac	1.5 k Vac	1.5 k Vac	1.5 k Vac	1.5 k Vac (type test) / 500 Vac (routine test)	1.5 k Vac	1.5 k Vac
General/Physical Data							
Housing material	Plastic	Plastic	Aluminum	Aluminum	Aluminum	Plastic	Aluminum
Signals	Green LED for DC OK	Green LED for DC OK	Green LED for DC OK	Green LED for DC OK	Green LED for DC OK	Green LED for DC OK	Green LED for DC OK
MTBF	>1,000,000 hr	>1,000,000 hr	>800,000 hr	>800,000 hr	>800,000 hr	>800,000 hr	>1,000,000 hr
Dimensions (L)	100 mm	100 mm	121 mm	121 mm	121 mm	120.6 mm	121 mm
Dimensions (W)	32 mm	32 mm	32 mm	50 mm	32 mm	32 mm	32 mm
Dimensions (H)	100.6 mm	100.6 mm	120 mm	118.7 mm	120 mm	113 mm	125 mm
Weight (kg)	0.18	0.2	0.33	0.64	0.37	0.33	0.37
Terminals	Screw	Screw	Screw	Screw	Screw	Screw	Finger-safe, removable
Wire size	AWG 22–14	AWG 22–14	AWG 22–14	AWG 18–24	AWG 22–14	AWG 22–14	AWG 22–12
Operating temperature	–20 °C to +75 °C	–20 °C to +75 °C	–20 °C to +75 °C	–20 °C to +75 °C	–20 °C to +75 °C	–20 °C to +75 °C	–20 °C to +80 °C
Storage temperature	–25 °C to +85 °C	–25 °C to +85 °C	–25 °C to +85 °C	–25 °C to +85 °C	–25 °C to +85 °C	–25 °C to +85 °C	–25 °C to +85 °C

Note

① Ratings for single-phase models are at 115 Vac; three-phase models are at 400 Vac.

PSG Series, continued

	Single-Phase PSG15E12SP	PSG30E12SP	PSG60E12SM	PSG100E12SM	PSG60E	PSG60E24SP	PSG60E24RM
General/Physical Data, continued							
Power derating—vertical mounting	>50 °C derate power by 2.5% / °C, >70 °C derate power by 4% / °C	>50 °C derate power by 2.5% / °C, >70 °C derate power by 4% / °C	>50 °C derate power by 2.5% / °C, >70 °C derate power by 4% / °C	>50 °C derate power by 2.5% / °C	>50 °C derate power by 2.5% / °C	<0 °C to –20 °C derate power by 1% / °C, >50 °C derate power by 2.5% / °C, >70 °C derate power by 4% / °C	>50 °C derate power by 2.5% / °C
Power derating—horizontal mounting	N/A	N/A	N/A	>50 °C derate power by 2.5% / °C, >70 °C derate power by 4% / °C	N/A	N/A	>50 °C derate power by 2.5% / °C
Operating humidity	<95% RH, noncondensing	<95% RH, noncondensing	<95% RH, noncondensing	<95% RH, noncondensing	<95% RH, noncondensing	<95% RH, noncondensing	<95% RH, noncondensing
Vibration	10 to 150 Hz, 0.35 mm acc. 50 m/s^2, single amplitude (5G max.) for 90 min. in each X, Y and Z directions, in accordance with IEC 60068-2-6						
Pollution degree	2	2	2	2	2	2	2
Climatic class	3K3 according to EN 60721	3K3 according to EN 60721	3K3 according to EN 60721	3K3 according to EN 60721	3K3 according to EN 60721	3K3 according to EN 60721	3K3 according to EN 60721
Safety and Protection							
Transient surge voltage	Varistor	Varistor	Varistor	Varistor	Varistor	Varistor	Varistor
Surge voltage protection against internal surge	Yes	Yes	Yes	Yes	Yes	Yes	Yes
Safety class	Class I with ground connection	Class I with ground connection	Class I with ground connection	Class I with ground connection	Class I with ground connection	Class I with ground connection	Class I with ground connection
Shock	30 G (300 m/s^2) in all directions according to IEC 60068-2-27	30 G (300 m/s^2) in all directions according to IEC 60068-2-27	30 G (300 m/s^2) in all directions according to IEC 60068-2-27	30 G (300 m/s^2) in all directions according to IEC 60068-2-27	30 G (300 m/s^2) in all directions according to IEC 60068-2-27	30 G (300 m/s^2) in all directions according to IEC 60068-2-27	30 G (300 m/s^2) in all directions according to IEC 60068-2-27

PSG Series, continued

	Single-Phase, continued						
	PSG60N24RP	PSG120E	PSG120E24RM	PSG240E	PSG240E24RM	PSG480E	PSG480E24RM
Input							
Nominal voltage	100–240 Vac	100–240 Vac	100–240 Vac	100–240 Vac	100–240 Vac	100–240 Vac	100–240 Vac
AC input range	85–264 Vac	85–264 Vac	85–264 Vac	85–264 Vac	85–264 Vac	85–264 Vac	85–264 Vac
DC input range	N/A	120–375 Vdc	120–375 Vdc	120–375 Vdc	120–375 Vdc	120–375 Vdc	120–375 Vdc
Frequency	47–63 Hz	47–63 Hz	47–63 Hz	47–63 Hz	47–63 Hz	47–63 Hz	47–63 Hz
Nominal current ①	<1.5 A at 100 Vac	1.4 A	<2.2 A	2.9 A	<2.5 A	5.7 A	<5 A
Inrush current limitation ①	<40 A	<80 A	<35 A	N/A	<35 A	N/A	<35 A
Internal fuse	T3.15 AH / 250 V	T3.15 AH / 250 V	T4 AH / 250 V	T6.3 AH / 250 V	T6.3 AH / 250 V	F10H / 250 A	T8 AH / 250 V
External fusing	6 A, 10 A or 16 A	6 A, 10 A or 16 A	6 A, 10 A or 16 A	10 A or 16 A	10 A or 16 A	10 A or 16 A	10 A or 16 A
Leakage current	<1 mA	<1 mA	<1 mA	<3.5 mA	<1 mA	<1 mA	<3 mA
Output							
Power	60 W	120 W	120 W	240 W	240 W	480 W	480 W
Nominal output voltage	24 Vdc ±2%	24 Vdc ±2%	24 Vdc ±2%	24 Vdc ±2%	24 Vdc ±2%	24 Vdc ±2%	24 Vdc ±2%
Adjustment range	22–28 Vdc	22–28 Vdc	24–28 Vdc	22–28 Vdc	24–28 Vdc	22–28 Vdc	22–28 Vdc
Nominal current	2.5 A	5 A	5 A	10 A	10 A	20 A	20 A
Startup with capacitive loads	Max. 8000 µF	Max. 10,000 µF	Max. 10,000 µF	Max. 10,000 µF	Max. 10,000 µF	Max. 10,000 µF	Max. 10,000 µF
Efficiency	>86% at 115 Vac, >87% at 230 Vac	>84% typ	>89% at 115 Vac, >90% at 230 Vac	>84% typ	>90% at 115 Vac and 230 Vac	>86% typ	>90% at 115 Vac and 230 Vac
Current surge	N/A	7.5 A	7.5 A	15 A	15 A	30 A	30 A
Current surge time	N/A	1 s (at 10 s intervals)	5 s	1 s (at 10 s intervals)	5 s	1 s (at 10 s intervals)	5 s
Residual ripple/peak switching (20 MHz)	<50 mVpp / <240 mVpp	<50 mV / <240 mVpp	<50 mVpp / <150 mVpp	<50 mV / <240 mVpp	<50 mVpp / <150 mVpp	<50 mV / <240 mVpp	<50 mVpp
Turn-on time	<3 s	<1 s	<1 s	<1 s	<1 s	<1 s	<1 s
Mains buffering at nominal load (typ.) ①	>20 ms	>35ms	>20 ms	>20 ms	>20 ms	>20 ms	>20 ms
Parallel operation	PSG480R24RM / PSG960R24RM / With o-ring diode	PSG480R24RM / PSG960R24RM / With o-ring diode	PSG480R24RM / PSG960R24RM / With o-ring diode	PSG480R24RM / PSG960R24RM / With o-ring diode	PSG480R24RM / PSG960R24RM / With o-ring diode	PSG480R24RM / PSG960R24RM / With o-ring diode	PSG480R24RM / PSG960R24RM / With o-ring diode
Galvanic Isolation							
Input/output	4 k Vac	4 k Vac (type test) / 3 k Vac (routine test)	4 k Vac	4 k Vac (type test) / 3 k Vac (routine test)	4 k Vac	4 k Vac (type test) / 3 k Vac (routine test)	4 k Vac
Input/ground	1.5 k Vac	1.5 k Vac (type test) / 1.5 k Vac (routine test)	1.5 k Vac	1.5 k Vac (type test) / 1.5 k Vac (routine test)	1.5 k Vac	1.5 k Vac (type test) / 1.5 k Vac (routine test)	1.5 k Vac
Output/ground	1.5 k Vac	1.5 k Vac (type test) / 500 Vac (routine test)	1.5 k Vac	1.5 k Vac (type test) / 500 Vac (routine test)	1.5 k Vac	1.5 k Vac (type test) / 500 Vac (routine test)	1.5 k Vac
General/Physical Data							
Housing material	Aluminum	Aluminum	Aluminum	Aluminum	Aluminum	Aluminum	Aluminum
Signals	Green LED for DC OK	Green LED for DC OK	Green LED for DC OK	Green LED for DC OK	Green LED for DC OK	Green LED for DC OK	Green LED for DC OK
MTBF	>800,000 hr	>800,000 hr	>800,000 hr	>300,000 hr	>500,000 hr	>300,000 hr	>500,000 hr
Dimensions (L)	120.6 mm	121 mm	121 mm	121 mm	121 mm	121 mm	121 mm
Dimensions (W)	32 mm	32 mm	50 mm	85 mm	85 mm	160 mm	144 mm
Dimensions (H)	119.3 mm	120 mm	123.1 mm	118.5 mm	124.1 mm	115 mm	118.6 mm
Weight (kg)	0.33	0.54	0.72	1.04	1.1	1.8	1.37
Terminals	Finger-safe, fixed	Screw	Finger-safe, removable	Screw	Finger-safe, removable	Screw	Finger-safe, fixed
Wire size	AWG 22–10	AWG 22–14	AWG 20–12	AWG 22–14	AWG 16–12	AWG 16–14 (input) AWG 12–10 (output)	AWG 18–10
Operating temperature	–20 °C to +80 °C	–20 °C to +75 °C	–20 °C to +80 °C	–20 °C to +75 °C	–20 °C to +80 °C	–20 °C to +75 °C	–25 °C to +75 °C
Storage temperature	–25 °C to +85 °C	–25 °C to +85 °C	–25 °C to +85 °C	–25 °C to +85 °C	–25 °C to +85 °C	–25 °C to +85 °C	–25 °C to +85 °C

Note

① Ratings for single-phase models are at 115 Vac; three-phase models are at 400 Vac.

PSG Series, continued

	Single-Phase, continued						
	PSG60N24RP	**PSG120E**	**PSG120E24RM**	**PSG240E**	**PSG240E24RM**	**PSG480E**	**PSG480E24RM**
General/Physical Data, continued							
Power derating—vertical mounting	>50 °C derate power by 2.5% / °C, >70 °C derate power by 4% / °C	>50 °C derate power by 2.5% / °C	>50 °C derate power by 2.5% / °C	>50 °C derate power by 2.5% / °C, >70 °C derate power by 4% / °C	>50 °C derate power by 2.5% / °C	>50 °C derate power by 2.5% / °C	>50 °C derate power by 2.5% / °C, >70 °C to 75 °C derate power by 5% / °C
Power derating—horizontal mounting	>50 °C derate power by 2.5% / °C, >70 °C derate power by 4% / °C	N/A	>50 °C derate power by 2.5% / °C	N/A	N/A	N/A	N/A
Operating humidity	<95% RH, noncondensing	<95% RH, noncondensing	<95% RH, noncondensing	<95% RH, noncondensing	<95% RH, noncondensing	<95% RH, noncondensing	<95% RH, noncondensing
Vibration	10 to 500 Hz, 0.35 mm acc. 30 m/s^2, single amplitude (3 G max.) for 60 min. in each X, Y and Z directions, in accordance with IEC 60068-2-6	10 to 150 Hz, 0.35 mm acc. 50 m/s^2, single amplitude (5G max.) for 90 min. in each X, Y and Z directions, in accordance with IEC 60068-2-6	10 to 150 Hz, 0.35 mm acc. 50 m/s^2, single amplitude (5G max.) for 90 min. in each X, Y and Z directions, in accordance with IEC 60068-2-6	10 to 150 Hz, 0.35 mm acc. 50 m/s^2, single amplitude (5G max.) for 90 min. in each X, Y and Z directions, in accordance with IEC 60068-2-6	10 to 150 Hz, 0.35 mm acc. 50 m/s^2, single amplitude (5G max.) for 90 min. in each X, Y and Z directions, in accordance with IEC 60068-2-6	10 to 150 Hz, 0.35 mm acc. 50 m/s^2, single amplitude (5G max.) for 90 min. in each X, Y and Z directions, in accordance with IEC 60068-2-6	10 to 150 Hz, 0.35 mm acc. 50 m/s^2, single amplitude (5G max.) for 90 min. in each X, Y and Z directions, in accordance with IEC 60068-2-6
Pollution degree	2	2	2	2	2	2	2
Climatic class	3K3 according to EN 60721	3K3 according to EN 60721	3K3 according to EN 60721	3K3 according to EN 60721	3K3 according to EN 60721	3K3 according to EN 60721	3K3 according to EN 60721
Safety and Protection							
Transient surge voltage	Varistor	Varistor	Varistor	Varistor	Varistor	Varistor	Varistor
Surge voltage protection against internal surge	Yes	Yes	Yes	Yes	Yes	Yes	Yes
Safety class	Class I with ground connection	Class I with ground connection	Class I with ground connection	Class I with ground connection	Class I with ground connection	Class I with ground connection	Class I with ground connection
Shock	30 G (300 m/s^2) in all directions according to IEC 60068-2-27	30 G (300 m/s^2) in all directions according to IEC 60068-2-27	30 G (300 m/s^2) in all directions according to IEC 60068-2-27	30 G (300 m/s^2) in all directions according to IEC 60068-2-27	30 G (300 m/s^2) in all directions according to IEC 60068-2-27	30 G (300 m/s^2) in all directions according to IEC 60068-2-27	30 G (300 m/s^2) in all directions according to IEC 60068-2-27
UL 1310	Class 2	—	—	—	—	—	—

PSG Series, continued

	Three-Phase PSG60F24RM	PSG120F24RM	PSG240F24RM	PSG480F24RM	PSG960F24RM
Input					
Nominal voltage	3 x 400–500 Vac	3 x 400–500 Vac	3 x 400–500 Vac	3 x 400–500 Vac	3 x 400–500 Vac
AC input range	3 x 320–600 Vac	3 x 320–600 Vac	3 x 320–600 Vac	3 x 320–600 Vac	3 x 320–600 Vac
DC input range	450–800 Vdc	450–800 Vdc	450–800 Vdc	450–800 Vdc	450–800 Vdc
Frequency	47–63 Hz	47–63 Hz	47–63 Hz	47–63 Hz	47–63 Hz
Nominal current ①	<0.3 A	<0.5 A	<0.75 A	<1 A	<1.7 A
Inrush current limitation ①	<30 A	<30 A	<40 A	<50 A	<40 A
Internal fuse	T 3.15 AH / 500 V, 600 V	T 3.15 AH / 500 V, 600 V	T 3.15 AH / 500 V, 600 V	T 3.15 AH / 500 V	T 4 AH / 500 V
External fusing	3 x circuit breakers 6 A, 10 A or 16 A	3 x circuit breakers 6 A, 10 A or 16 A	3 x circuit breakers 6 A, 10 A or 16 A	3 x circuit breakers 6 A, 10 A or 16 A	3 x circuit breakers 10 A or 16 A
Leakage current	<3.5 mA	<3.5 mA	<3.5 mA	<3.5 mA	<3.5 mA
Output					
Power	60 W	120 W	240 W	480 W	960 W
Nominal output voltage	24 Vdc ±2%	24 Vdc ±2%	24 Vdc ±2%	24 Vdc ±2%	24 Vdc ±2%
Adjustment range	24–28 Vdc	24–28 Vdc	24–28 Vdc	24–28 Vdc	24–28 Vdc
Nominal current	2.5 A	5 A	10 A	20 A	40 A
Startup with capacitive loads	Max. 10,000 µF	Max. 10,000 µF	Max. 10,000 µF	Max. 10,000 µF	Max. 10,000 µF
Efficiency	>86% at 3 x 400 Vac and 3 x 500 Vac	>88% at 3 x 400 Vac and 3 x 500 Vac	>92% at 3 x 400 Vac and 3 x 500 Vac	>91% at 3 x 400 Vac and 3 x 500 Vac	>92% at 3 x 400 Vac and 3 x 500 Vac
Current surge	3.75 A	7.5 A	15 A	30 A	60 A
Current surge time	5 s	5 s	5 s	5 s	5 s
Residual ripple/peak switching (20 MHz)	<50 mVpp	<50 mVpp	<150 mVpp	<150 mVpp	<240 mVpp
Turn-on time	<1 s	<1 s	<1 s	<1 s	<1.5 s
Mains buffering at nominal load (typ.) ①	>20 ms	>20 ms	>20 ms	>20 ms	>20 ms
Parallel operation	PSG480R24RM / PSG960R24RM / With o-ring diode	PSG480R24RM / PSG960R24RM / With o-ring diode	PSG480R24RM / PSG960R24RM / With o-ring diode	PSG480R24RM / PSG960R24RM / With o-ring diode	PSG960R24RM / With o-ring diode
Galvanic Isolation					
Input/output	4 k Vac	4 k Vac	4 k Vac	4 k Vac	4 k Vac
Input/ground	2 k Vac	2 k Vac	2 k Vac	2 k Vac	2 k Vac
Output/ground	1.5 k Vac	1.5 k Vac	1.5 k Vac	1.5 k Vac	1.5 k Vac
General/Physical Data					
Housing material	Aluminum	Aluminum	Aluminum	Aluminum	Aluminum
Signals	Green LED for DC OK	Green LED for DC OK	Green LED for DC OK	Green LED for DC OK	Green LED for DC OK
MTBF	>500,000 hr	>500,000 hr	>300,000 hr	>500,000 hr	>300,000 hr
Dimensions (L)	121 mm	121 mm	121 mm	121 mm	121 mm
Dimensions (W)	50 mm	50 mm	70 mm	140 mm	255 mm
Dimensions (H)	117.3 mm	117.3 mm	117.3 mm	117.3 mm	117.3 mm
Weight (kg)	0.66	0.66	0.89	1.35	2.6
Terminals	Finger-safe, fixed	Finger-safe, fixed	Finger-safe, fixed	Finger-safe, fixed	Finger-safe, fixed
Wire size	AWG 18–12	AWG 18–12	AWG 18–12 (input) AWG 16–12 (output)	AWG 18–8 (input) AWG 12–10 (output)	AWG 18–8 (input) AWG 12–10 (output)
Operating temperature	–25 °C to +75 °C	–25 °C to +75 °C	–25 °C to +75 °C	–25 °C to +80 °C	–25 °C to +65 °C
Storage temperature	–25 °C to +85 °C	–25 °C to +85 °C	–25 °C to +85 °C	–25 °C to +85 °C	–25 °C to +85 °C

Note

① Ratings for single-phase models are at 115 Vac; three-phase models are at 400 Vac.

PSG Series, continued

	Three-Phase, continued PSG60F24RM	PSG120F24RM	PSG240F24RM	PSG480F24RM	PSG960F24RM
General/Physical Data, continued					
Power derating—vertical mounting	>50 °C derate power by 2.5% / °C, >70 °C derate power by 5% / °C	>50 °C derate power by 2.5% / °C, >70 °C derate power by 5% / °C	>50 °C derate power by 2.5% / °C, >70 °C derate power by 5% / °C	>50 °C derate power by 2.5% / °C, >70 °C derate power by 5% / °C	>50 °C derate power by 2.5% / °C
Power derating—horizontal mounting	>45 °C derate power by 2.5% / °C, >55 °C derate power by 1.66% / °C, >70 °C derate power by 5% / °C	>40 °C derate power by 2.5% / °C, >60 °C derate power by 5% / °C	>40 °C derate power by 2.5% / °C, >60 °C derate power by 5% / °C	N/A	N/A
Operating humidity	<95% RH, noncondensing	<95% RH, noncondensing	<95% RH, noncondensing	5 to 95% RH, noncondensing	5 to 95% RH, noncondensing
Vibration	10 to 500 Hz, 0.35 mm acc. 30 m/s^2, single amplitude (3 G max.) for 60 min. in each X, Y and Z directions, in accordance with IEC 60068-2-6				
Pollution degree	2	2	2	2	2
Climatic class	3K3 according to EN 60721	3K3 according to EN 60721	3K3 according to EN 60721	3K3 according to EN 60721	3K3 according to EN 60721
Safety and Protection					
Transient surge voltage	Varistor	Varistor	Varistor	Varistor	Varistor
Surge voltage protection against internal surge	Yes	Yes	Yes	Yes	Yes
Safety class	Class I with ground connection	Class I with ground connection	Class I with ground connection	Class I with ground connection	Class I with ground connection
Shock	30 G (300 m/s^2) in all directions according to IEC 60068-2-27	30 G (300 m/s^2) in all directions according to IEC 60068-2-27	30 G (300 m/s^2) in all directions according to IEC 60068-2-27	30 G (300 m/s^2) in all directions according to IEC 60068-2-27	30 G (300 m/s^2) in all directions according to IEC 60068-2-27

PSG Series, continued

	Redundancy Modules PSG480R24RM	PSG960R24RM
Input		
Nominal voltage	24–48 Vdc	24–48 Vdc
DC input range	22–60 Vdc	22–60 Vdc
Nominal current	<20 A	<40 A
Inrush current limitation	<25 A	<50 A
Output		
Nominal output voltage	Vin–0.65 V (typ.)	Vin–0.65 V (typ.)
Nominal current	<20 A	<40 A
Efficiency	>97% typ.	>97% typ.
Galvanic Isolation		
Input/ground	1.5 k Vac	1.5 k Vac
Output/ground	1.5 k Vac	1.5 k Vac
General/Physical Data		
Housing material	Aluminum	Aluminum
Signals ①	Green LED for DC Vin1 OK and DC Vin2 OK	Green LED for DC Vin1 OK and DC Vin2 OK
MTBF	>800,000 hr	>800,000 hr
Dimensions (L)	121 mm	121 mm
Dimensions (W)	50 mm	50 mm
Dimensions (H)	122.1 mm	122.1 mm
Weight (kg)	0.375	0.515
Terminals	Finger safe—fixed	Finger safe—fixed
Wire size	AWG 12–10	AWG 12–10
Operating temperature	–40 °C to +80 °C	–40 °C to +80 °C
Storage temperature	–40 °C to +85 °C	–40 °C to +85 °C
Power de-rating—vertical mounting	> 50 °C de-rate power by 2.5% / °C	> 50 °C de-rate power by 2.5% / °C
Power de-rating—horizontal mounting	N/A	N/A
Operating humidity	< 95% RH, noncondensing	< 95% RH, noncondensing
Vibration	10 to 500 Hz, 0.35 mm acc. 30m/s², single amplitude (3 G max.) for 60 min. in each X, Y and Z directions, in accordance with IEC 60068-2-6	10 to 500 Hz, 0.35 mm acc. 30m/s², single amplitude (3 G max.) for 60 min. in each X, Y and Z directions, in accordance with IEC 60068-2-6
Pollution degree	2	2
Climatic class	3K3 according to EN 60721	3K3 according to EN 60721
Safety and Protection		
Safety class	Class 2 with ground connection	Class III with ground connection
Shock	30 G (300 m/S²) in all directions according to IEC 60068-2-27	30 G (300 m/S²) in all directions according to IEC 60068-2-27

Note

① The LED will turn on when the Vin1 and Vin2 > 18 V ±5% (for 24 V system) or > 36 V ±5% (for 48 V system) and not more than 30 V (for 24 V system) or not more than 60 V (for 48 V system), the relay contacts will be closed. If Vin1 and Vin2 is under or over this range, the LED will be turned off.

PSG Series, continued

	Buffer Module PSG480B24RM
Input	
Nominal voltage	24 Vdc
DC input range	22.8–28.8 Vdc
Maximum voltage	35 Vdc
Current	Charging mode: <0.6 A
	Discharging mode: 20 A max.
Power (standby mode)	2.5 W average
Maximum signal (inhibit)	35 V / 10 mA
Max inrush current	< 20 A
Charging time	< 30s
Output	
Nominal voltage	24 Vdc typ.
DC adjustment range	Switch = "Fix 22V": Buffering starts if terminal voltage falls below 22 V
	Switch = "Vin-1V" (Factory Setting): Buffering starts if terminal voltage is decreased by >1 V
Maximum voltage	35 Vdc
Current	20 A max.
buffering time	250 ms min. at 24 V/20 A load, 5 s min. at 24 V/1 A load
Maximum signal	35 V / 10 mA
PARD (20MHz)	<200 mVpp
Galvanic isolation	
Input/ground	1.5 k Vac
Output/ground	1.5 k Vac
Signal/ground	1.5 k Vac
General/Physical Data	
Housing material	Aluminum
Signals	Green LED off: unit is discharged or Vin < 22 Vdc
	Green LED on: unit is fully charged
	Green LED blinking slowly: unit is charging
	Green LED blinking quickly: unit is discharging
MTBF	>800,000 hr
Parallel connection	Yes
Series connection	No
Dimensions (L)	121 mm
Dimensions (W)	70 mm
Dimensions (H)	120.1 mm
Weight (kg)	0.76
Terminals	Finger safe–fixed
Wire Size	Input / Output: AWG 12–10
	Signal: AWG 24–10
Operating temperature	–25 °C to +75 °C
Storage temperature	–25 °C to +85 °C
Power de-rating—vertical mounting	>70 °C de-rate power by 5% / °C
Operating humidity	< 95% RH, noncondensing
Vibration	10 to 500 Hz, 0.35 mm acc. 30 m/s², single amplitude (3 G max.) for 60 min. in each X, Y and Z directions, in accordance with IEC 60068-2-6
Pollution degree	2
Safety and Protection	
Shock	30 G (300 m/S²) in all directions according to IEC60068-2-27
Safety class	Class I with ground connection

Power Derating Curves

Vertical Mounting Position PSG15E12SP

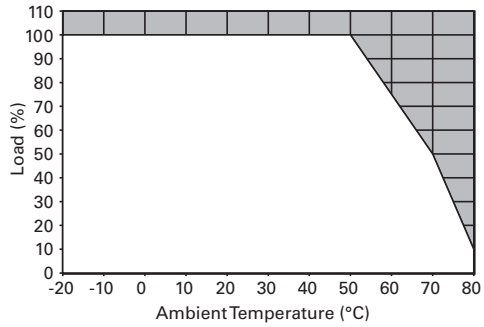

Vertical Mounting Position PSG60E

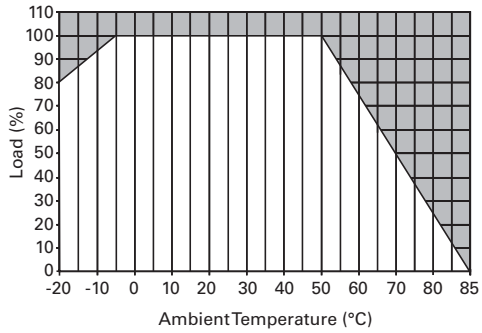

Vertical Mounting Position PSG30E12SP

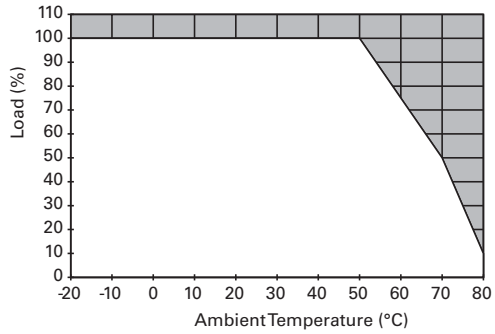

Vertical Mounting Position PSG60E24SP

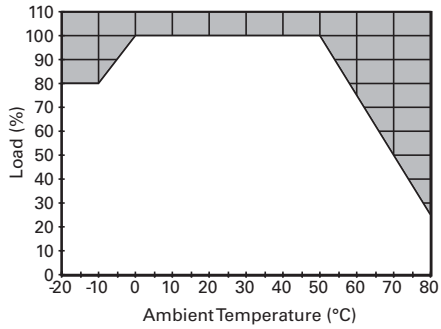

Vertical Mounting Position PSG60E12SM

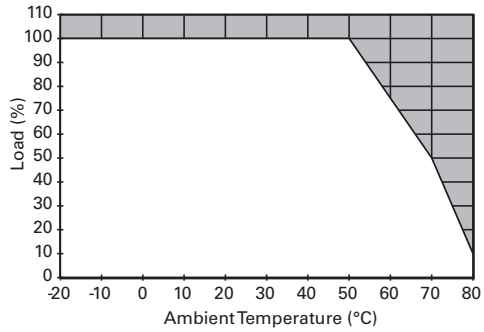

Vertical and Horizontal Mounting Position PSG60E24RM

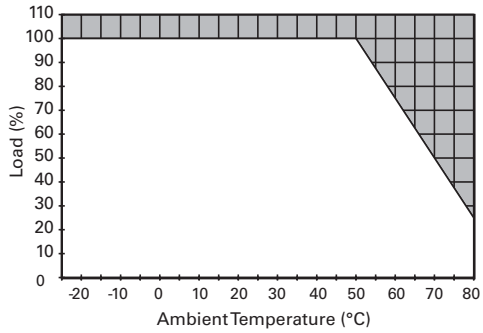

Vertical and Horizontal Mounting Position PSG100E12SM

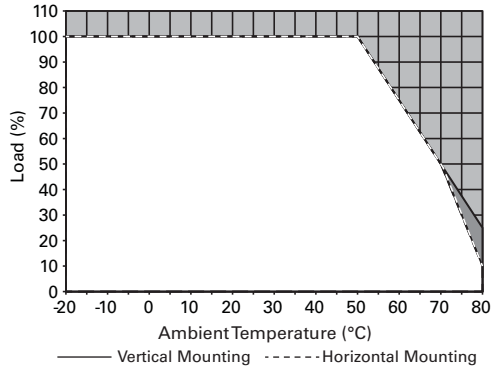

Vertical and Horizontal Mounting Position PSG60N24RP

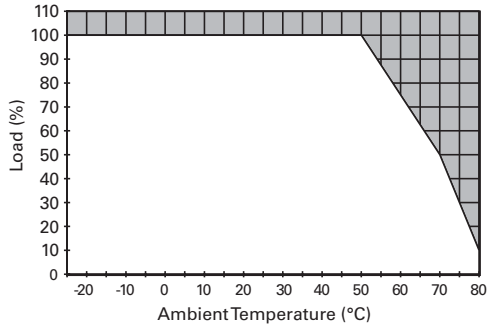

Vertical Mounting Position PSG120E

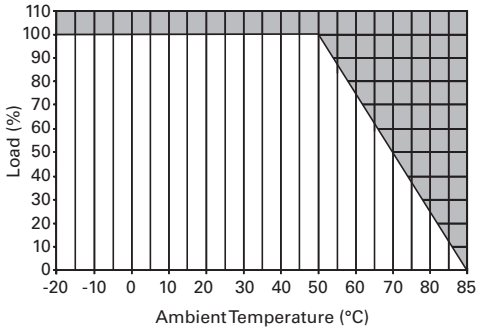

Vertical Mounting Position PSG480E

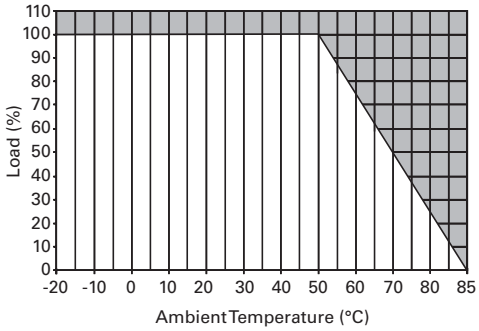

Vertical and Horizontal Mounting Position PSG120E24RM

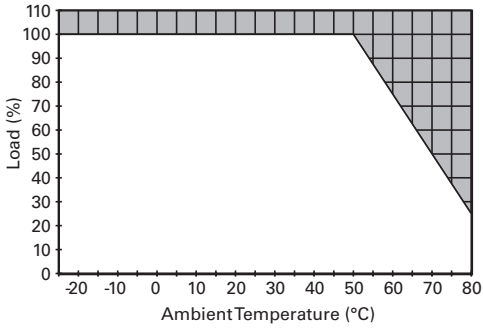

Vertical Mounting Position PSG480E24RM

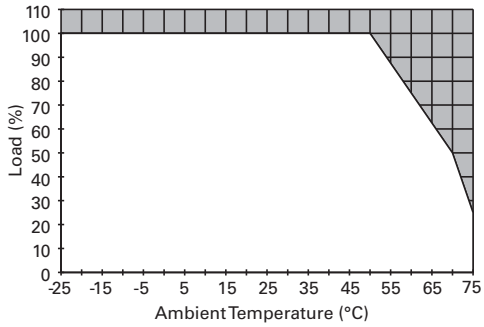

Vertical Mounting Position PSG240E

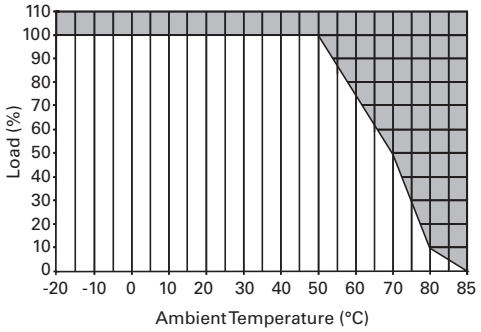

Vertical and Horizontal Mounting Position PSG60F24RM

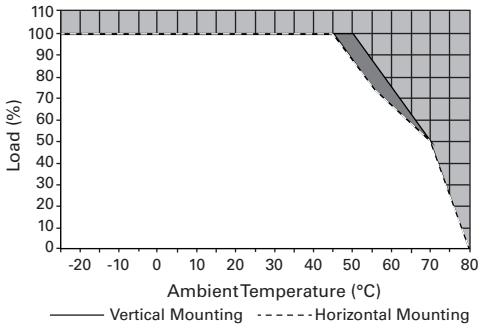

Vertical and Horizontal Mounting Position PSG240E24RM

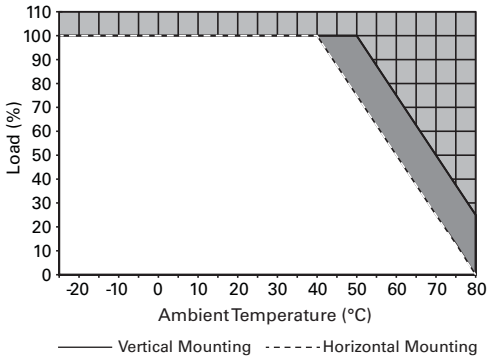

Vertical and Horizontal Mounting Position PSG120F24RM

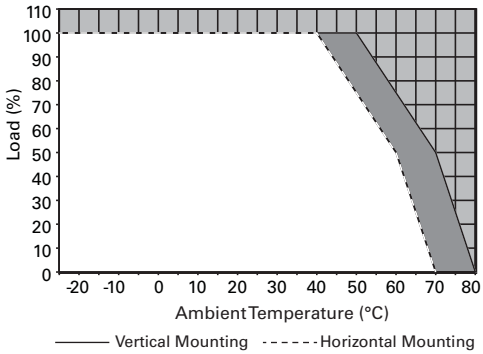

Vertical and Horizontal Mounting Position PSG240F24RM

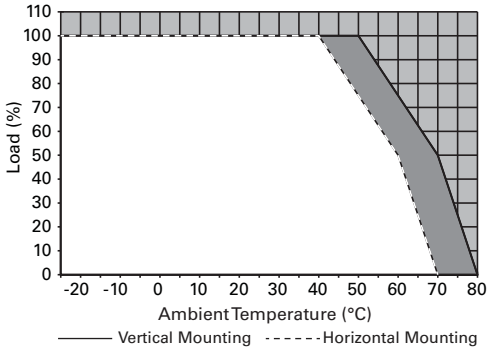

Vertical Mounting Position PSG480R24RM

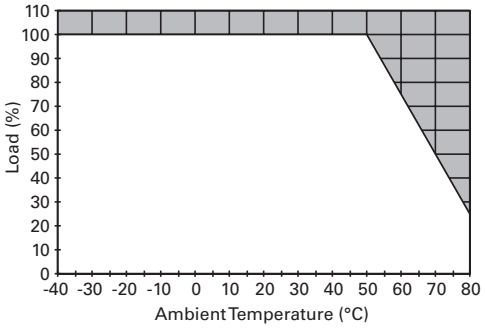

Vertical Mounting Position PSG480F24RM

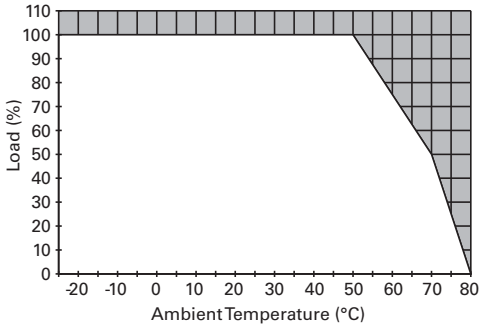

Vertical Mounting Position PSG960R24RM

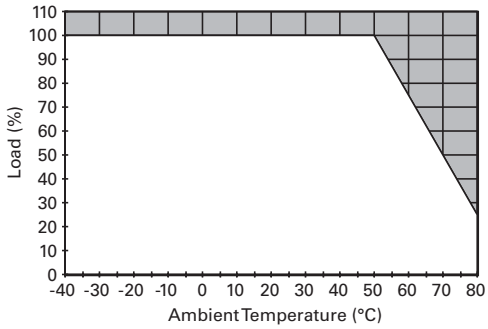

Vertical Mounting Position PSG960F24RM

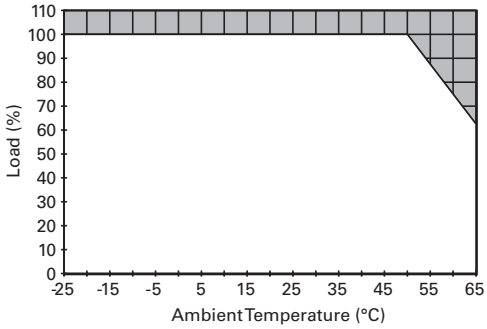

Vertical Mounting Position PSG480B24RM

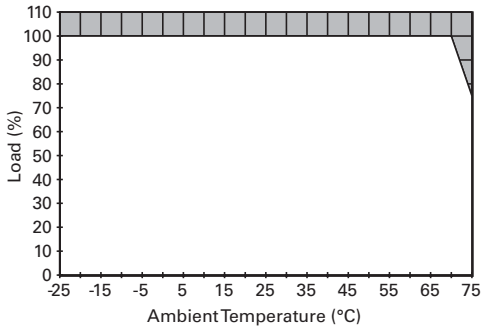

Dimensions

Approximate Dimensions in mm

Note: Dimensions are for reference only.

PSG15E12SP

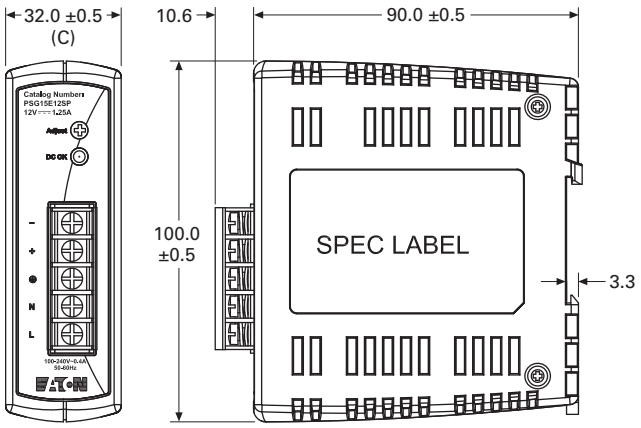

PSG60E12SM

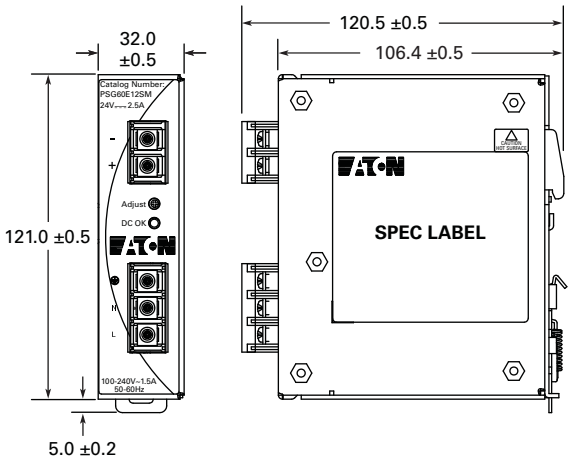

PSG30E12SP

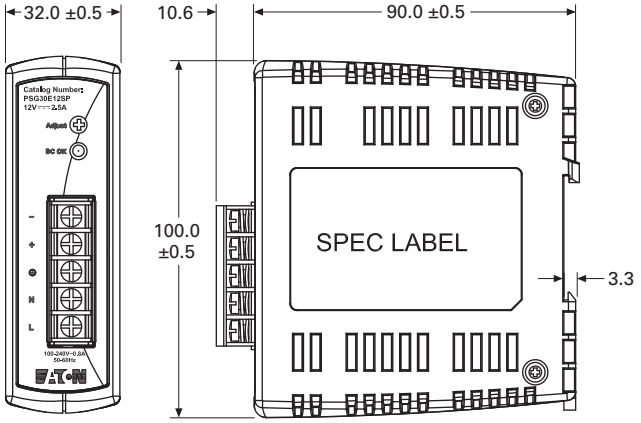

PSG100E12SM

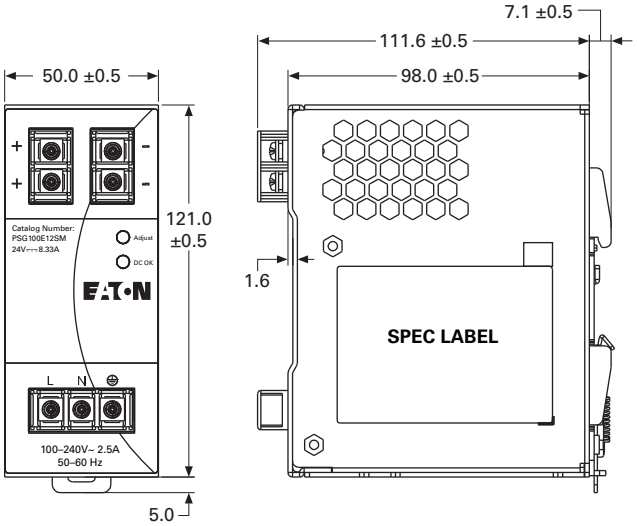

Approximate Dimensions in mm

Note: Dimensions are for reference only.

PSG60E

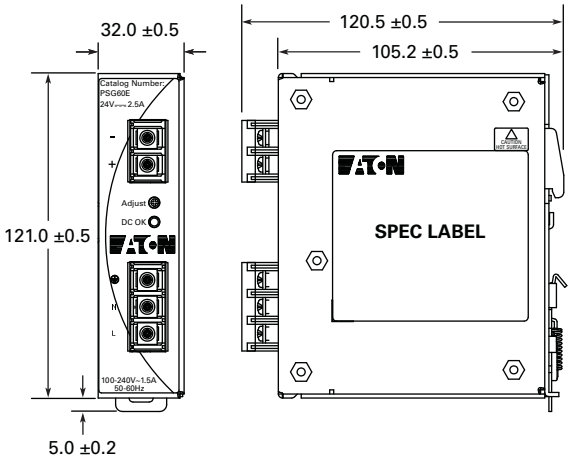

PSG60E24RM

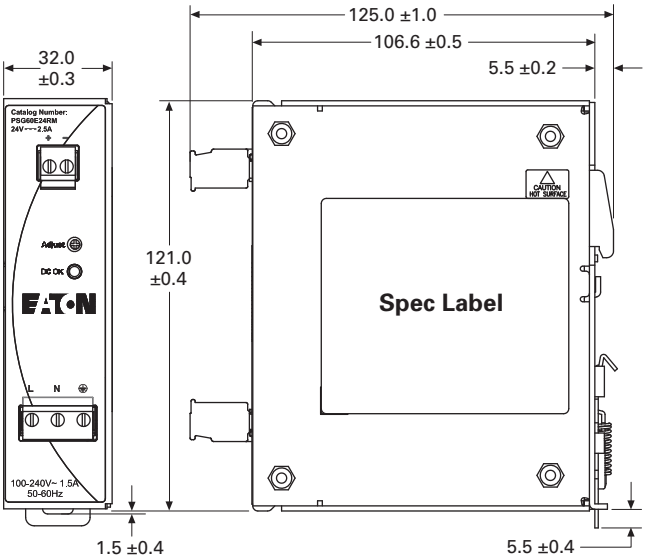

PSG60E24SP

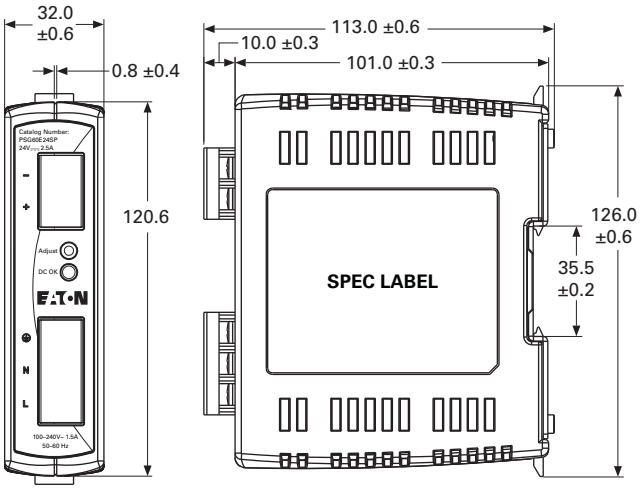

PSG60N24RP

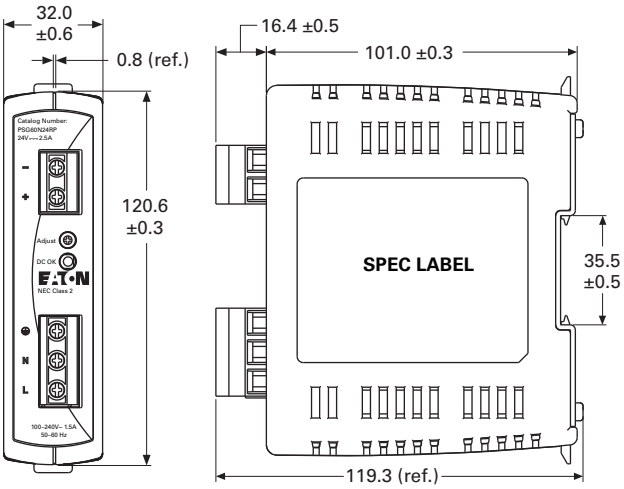

Approximate Dimensions in mm

Note: Dimensions are for reference only.

PSG120E

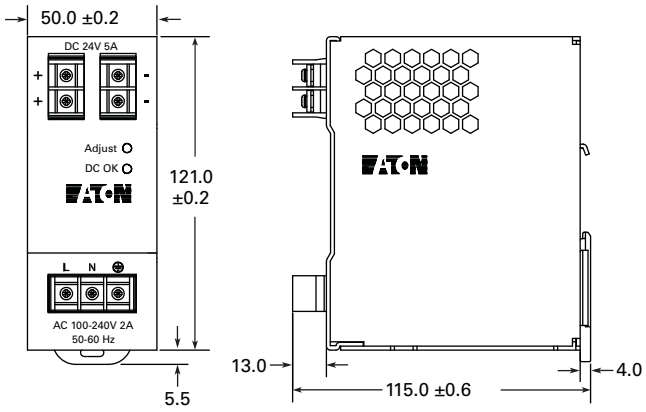

PSG240E

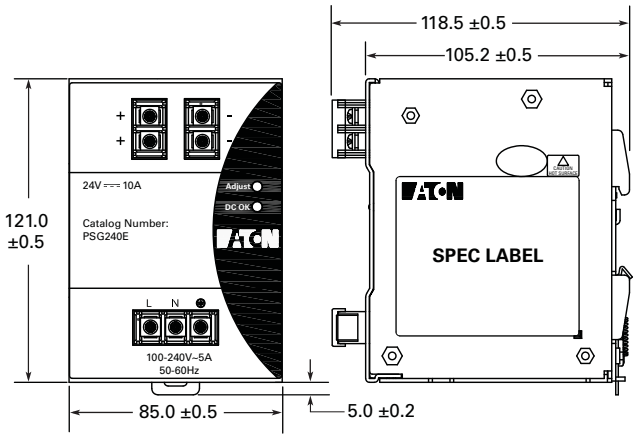

PSG120E24RM

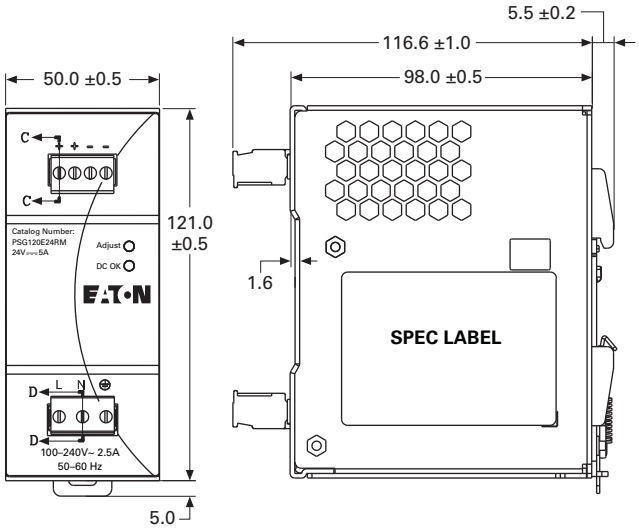

PSG240E24RM

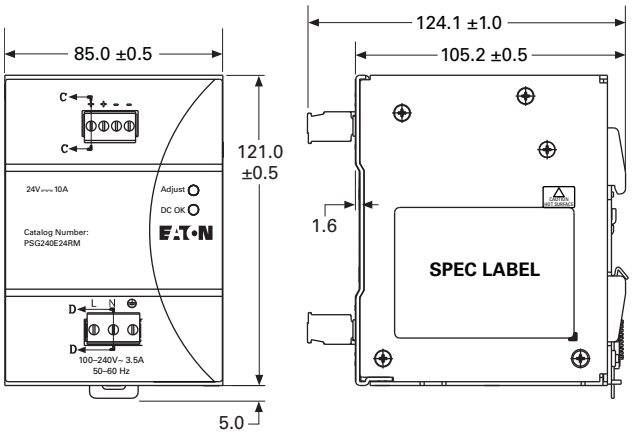

Approximate Dimensions in mm

Note: Dimensions are for reference only.

PSG480E

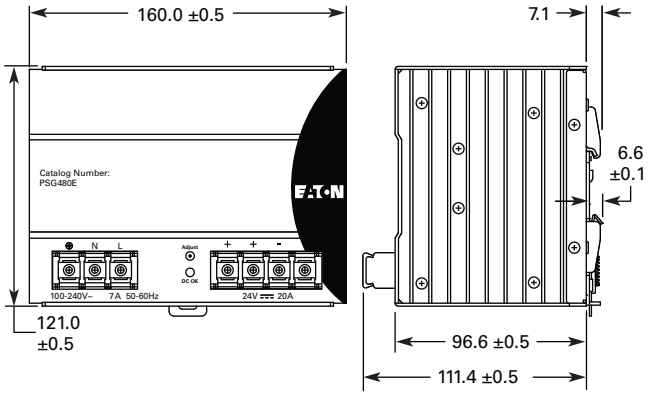

PSG60F24RM

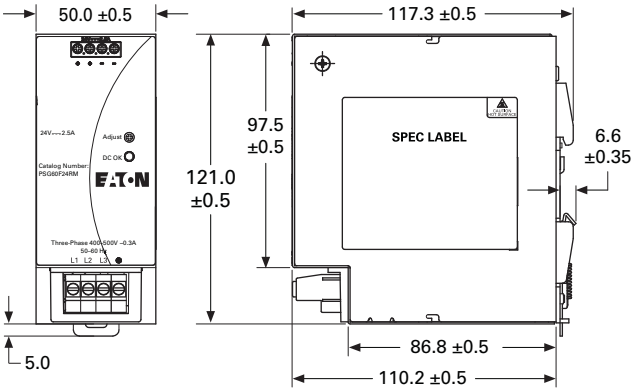

PSG480E24RM

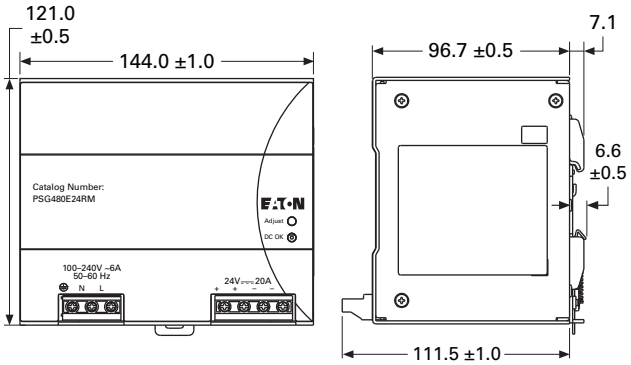

PSG120F24RM

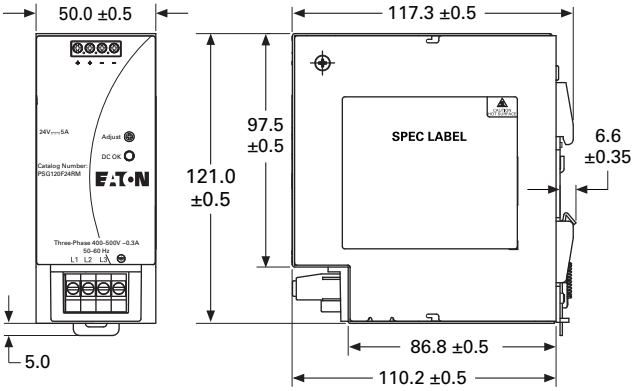

Approximate Dimensions in mm

Note: Dimensions are for reference only.

PSG240F24RM

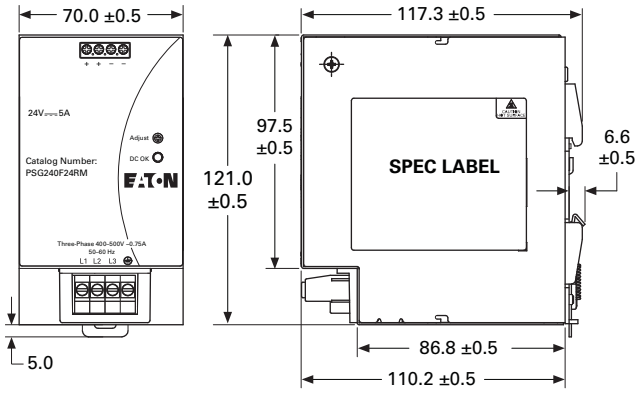

PSG960F24RM

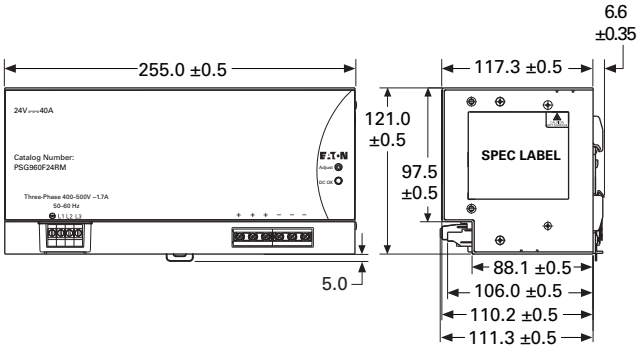

PSG480F24RM

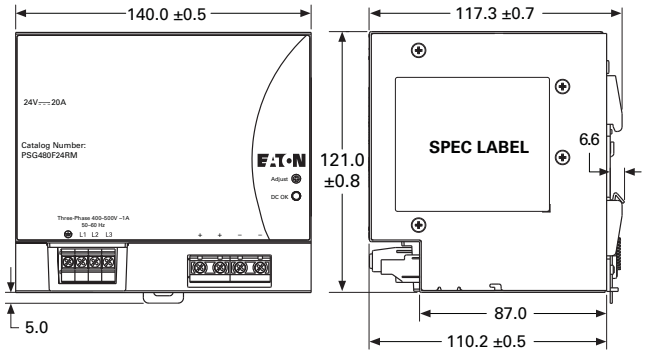

PSG480R24RM

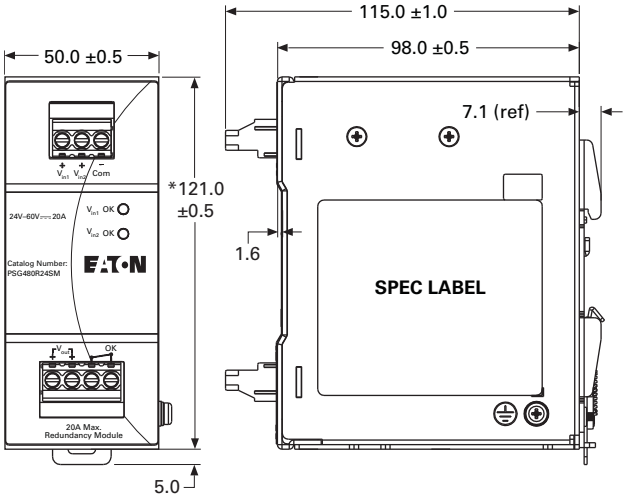

Approximate Dimensions in mm

Note: Dimensions are for reference only.

PSG960R24RM

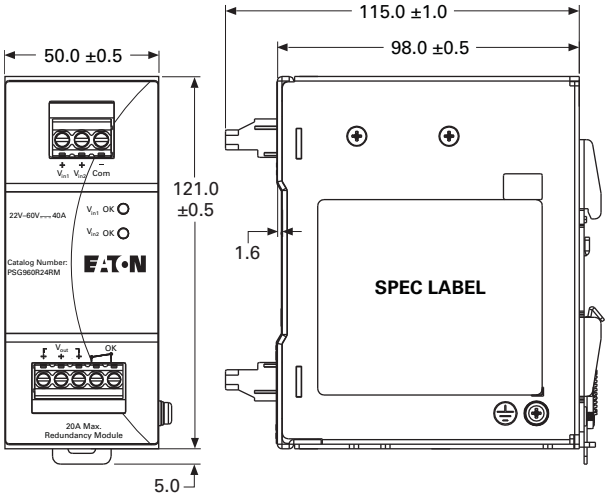

PSG480B24RM

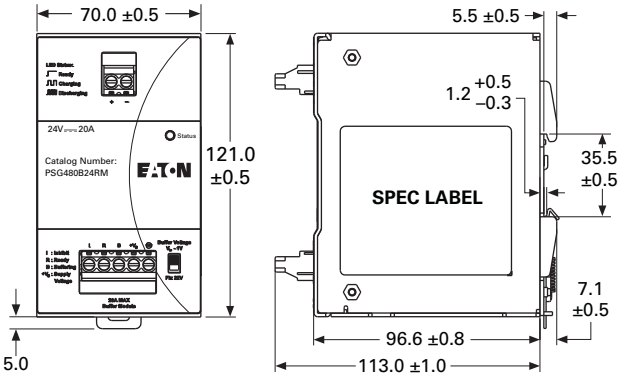

ELC Series

Contents

Description	*Page*
PSL Series	**V7-T6-4**
PSC Series	**V7-T6-10**
PSG Series	**V7-T6-16**
ELC Series	
Product Selection	**V7-T6-37**
Technical Data and Specifications	**V7-T6-37**
Dimensions	**V7-T6-38**
easyRelay Power Supply	**V7-T6-39**
Sensor Power Supply	**V7-T6-43**

ELC Series

Product Description

Eaton's ELC power supplies are the perfect products for those applications requiring a very compact and low-cost source for 24 Vdc power. While these products were developed to be a perfect match for our Eaton Logic Controllers, they can be used in a variety of applications.

The lightweight, DIN rail mounted enclosures, wide input voltage range and robust screw terminals make these power supplies easy to install and use. They are available in 1 A and 2 A models.

Features, Benefits and Functions

- Universal input voltage: 85–264 Vac
- Compact size, with common depth and height across models allows for common panel depths and family consistency
- ELC styling provides maximum aesthetic appeal when used with Eaton Logic Controllers
- Front-mounted pressure plate screw terminals for a robust connection
- Removable finger-safe protective cover for terminals
- Power ON indication LED
- Integrated mounting hardware for panel mounting or DIN rail mounting

Standards and Certifications

- cULus listed
- CE marked
- RoHS compliant

Product Selection

ELC-PS01

ELC Series

Description	Catalog Number
24 watt, 1 amp power supply	**ELC-PS01**
48 watt, 2 amp power supply	**ELC-PS02**

Technical Data and Specifications

ELC Series

Capacity	ELC-PS01 24 W	ELC-PS02 48 W
Input		
Nominal voltage	100–240 Vac	100–240 Vac
Voltage range	85–264 Vac	85–264 Vac
Frequency	47–63 Hz	47–63 Hz
Output		
Nominal output voltage	24 Vdc ± 3%	24 Vdc ± 3%
Nominal current	1 A	2 A
Efficiency	78% to 87% typical at full load	78% to 87% typical at full load
Residual ripple/peak switching (20 MHz)	< 100 mV typical at full load	< 240 mV typical at full load
General/Physical Data		
Housing material	Plastic	Plastic
Dimensions (D)	60 mm	60 mm
Dimensions (W)	36.5 mm	55 mm
Dimensions (H)	90 mm	90 mm
Weight (g)	158	250
Operating temperature	0 °C to +55 °C	0 °C to +55 °C
Storage temperature	–25 °C to +70 °C	–25 °C to +70 °C
Operating humidity	50% to 95% RH, noncondensing	50% to 95% RH, noncondensing
Pollution degree	2	2
Approvals/Certifications		
	UL 508, CE, RoHS, EMC directive 89/336/EEC, low voltage directive 73/23/EEC	UL 508, CE, RoHS, EMC directive 89/336/EEC, low voltage directive 73/23/EEC
Safety and Protection		
Overload/short circuit protection	Auto recovery	Auto recovery

Dimensions

Approximate Dimensions in Inches (mm)

ELC-PS01 Power Supply

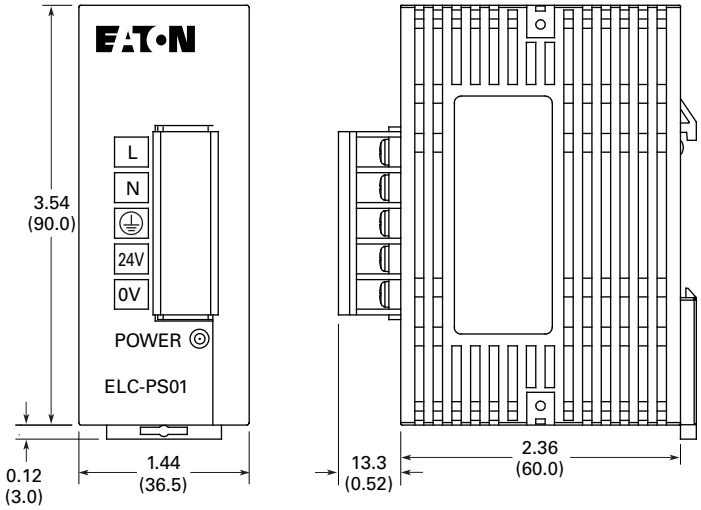

ELC-PS02 Power Supply

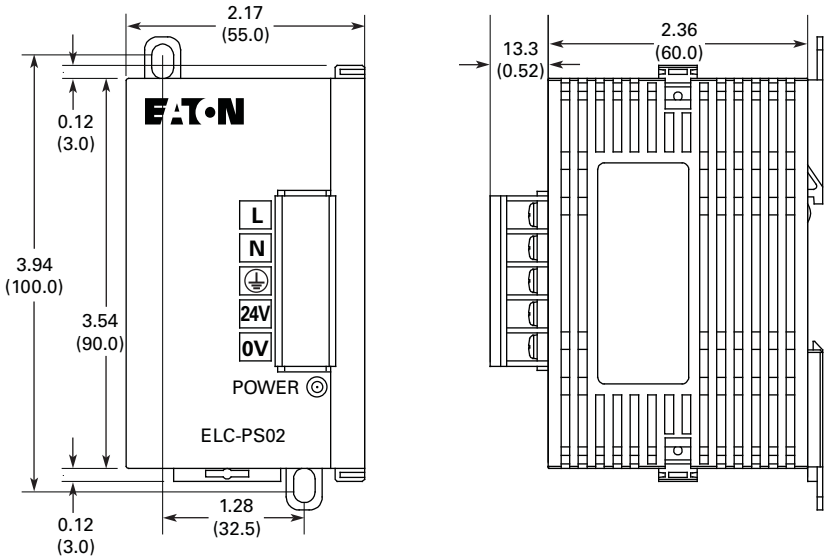

easyRelay Power Supply

Contents

Description	*Page*
PSL Series	**V7-T6-4**
PSC Series	**V7-T6-10**
PSG Series	**V7-T6-16**
ELC Series	**V7-T6-36**
easyRelay Power Supply	
Product Selection	**V7-T6-40**
Technical Data and Specifications	**V7-T6-41**
Dimensions	**V7-T6-42**
Sensor Power Supply	**V7-T6-43**

easyRelay Power Supply

Product Description

Eaton's easyRelay power supplies are the perfect products for those applications requiring a low amperage 24 Vdc power source. While these products were developed to be a perfect match for our easyRelay products, they can be used in a variety of applications.

Features, Benefits and Functions

- Universal input voltage: 85–264 Vac, 50/60 Hz
- Wide operating temperature range (–25 °C to +55 °C)
- Power ON / diagnostics LED: continuous light on—fault-free operation; flashing LED—short circuit overload on voltage output
- Optional mounting hardware for panel mounting (EZB4-101-GF1) or standard DIN rail mounting
- Finger-safe, side-entry screw clamp terminals for clean wiring
- Primary switched-mode power supplies
- Output voltages can be connected in parallel to increase power output or for redundant operation to achieve greater system availability
- Safety extra low voltage (SELV to EN 55 022)
- Radio interference Class B to EN 55 011 and EN 55 022 for use in industrial and public networks

Standards and Certifications

- UL listed
- CSA certified
- CE marked
- RoHS compliant
- CSA Class I, Division 2 rated for groups A, B, C, D

Listed

Product Selection

easyRelay Power Supply Units

Rated input voltage 100–240 Vac, single-phase.

	Input Voltage Range	Rated Output Voltage	Output Voltage Setting Range	Rated Output Power	Rated Output Current	Catalog Number
EASY200-POW	100–240 Vac	24 Vdc/12 Vdc	—	8 W	0.35 A / 20 mA	**EASY200-POW**
EASY400-POW	100–240 Vac	24 Vdc	—	30 W	1.25 A	**EASY400-POW**
EASY500-POW	100–240 Vac	24 Vdc	—	60 W	2.5 A	**EASY500-POW**
EASY600-POW	100–240 Vac	24 Vdc	—	100 W	4.2 A	**EASY600-POW**

Technical Data and Specifications

easyRelay Series

Capacity	EASY200-POW 8 W	EASY400-POW 30 W	EASY500-POW 60 W	EASY600-POW 100 W
Input				
Nominal voltage	100–240 Vac	100–240 Vac	100–240 Vac	100–240 Vac
Voltage range	85–264 Vac	85–264 Vac	85–264 Vac	85–264 Vac
Frequency	47–63 Hz	47–63 Hz	47–63 Hz	47–63 Hz
Output				
24 Vdc				
Nominal output voltage	24 Vdc ± 3%	24 Vdc ± 3%	24 Vdc ± 3%	24 Vdc ± 3%
Nominal current	0.35 A	1.25 A	2.5 A	4.2 A
12 Vdc				
Nominal output voltage	12 Vdc	—	—	—
Nominal current	20 mA	—	—	—
General/Physical Data				
Housing material	Plastic	Plastic	Plastic	Plastic
Dimensions (D)	2.22 in (56.5 mm)	2.22 in (56.5 mm)	2.22 in (56.5 mm)	2.22 in (56.5 mm)
Dimensions (W)	1.40 in (35.5 mm)	2.81 in (71.5 mm)	2.81 in (71.5 mm)	4.23 in (107.5 mm)
Dimensions (H)	3.54 in (90 mm)	3.54 in (90 mm)	3.54 in (90 mm)	3.54 in (90 mm)
Operating temperature	–25 °C to +55 °C	–25 °C to +55 °C	–25 °C to +55 °C	–25 °C to +55 °C
Storage temperature	–40 °C to +70 °C	–40 °C to +70 °C	–40 °C to +70 °C	–40 °C to +70 °C
Pollution degree	2	2	2	2
Connection cables				
Solid	0.2–4.0 mm^2 (AWG 22–12)	0.2–4.0 mm^2 (AWG 22–12)	0.2–4.0 mm^2 (AWG 22–12)	0.2–4.0 mm^2 (AWG 22–12)
Flexible	0.2–2.5 mm^2 (AWG 22–12)	0.2–2.5 mm^2 (AWG 22–12)	0.2–2.5 mm^2 (AWG 22–12)	0.2–2.5 mm^2 (AWG 22–12)
Approvals/Certifications				
	UL, CE, RoHS, CSA, EN 50178m IEC/EN 60947	UL, CE, RoHS, CSA, EN 50178m IEC/EN 60947	UL, CE, RoHS, CSA, EN 50178m IEC/EN 60947	UL, CE, RoHS, CSA, EN 50178m IEC/EN 60947
Safety and Protection				
Overload/short circuit protection	Yes	Yes	Yes	Yes
Overcurrent limitation form	0.3 A	1.4 A	2.8 A	4.6 A
Degree of protection	IP20	IP20	IP20	IP20
RFI suppression	EN 55011, EN 55022 Class B, IEC 61000-6-1, 2, 3, 4	EN 55011, EN 55022 Class B, IEC 61000-6-1, 2, 3, 4	EN 55011, EN 55022 Class B, IEC 61000-6-1, 2, 3, 4	EN 55011, EN 55022 Class B, IEC 61000-6-1, 2, 3, 4
Potential isolation (prim./sec.)	Yes, SELV, (to EN 600950, VDE 805)	Yes, SELV, (to EN 600950, VDE 805)	Yes, SELV, (to EN 600950, VDE 805)	Yes, SELV, (to EN 600950, VDE 805)

Dimensions

Approximate Dimensions in Inches (mm)

EASY200-PO W, EASY400-POW and EASY500-POW Series

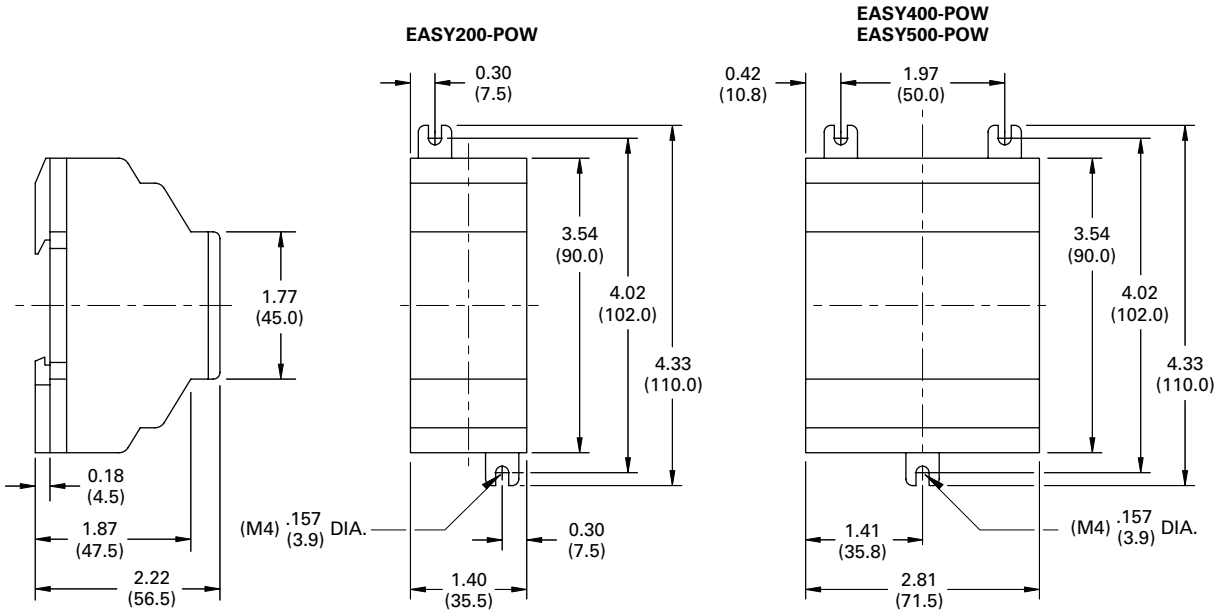

EASY600-POW Series

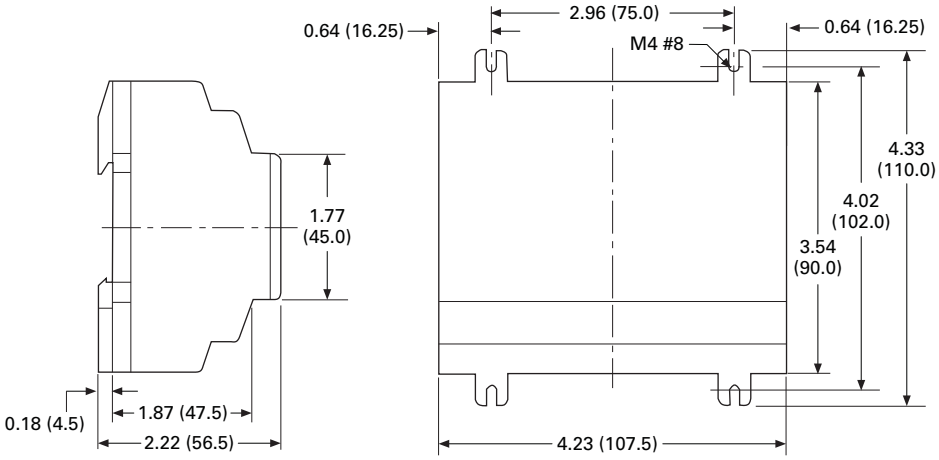

Sensor Power Supply

Contents

Description	*Page*
PSL Series	**V7-T6-4**
PSC Series	**V7-T6-10**
PSG Series	**V7-T6-16**
ELC Series	**V7-T6-36**
easyRelay Power Supply	**V7-T6-39**
Sensor Power Supply	
Product Selection	**V7-T6-44**
Technical Data and Specifications	**V7-T6-44**
Wiring Diagram	**V7-T6-45**
Dimensions	**V7-T6-45**

Sensor Power Supply

Product Description

Eaton's sensor power supply was specially designed to be used with the 200 Series and E68 Series zero pressure accumulation systems, but is also suitable for use in a wide variety of applications. The unit delivers 100 W output at 27 Vdc and supports easy, Class II wiring. The power supply is a tamper-proof, rugged component easily mounted to a conveyor side-channel or support. Internal components are fully encapsulated in a strong die-cast housing to stand up to rugged handling, ensuring flawless performance in any material handling environment.

Features, Benefits and Functions

- Integrated AC junction box for one-step mounting and wiring without the need for additional accessories
- Built-in DC power health contact allows easy monitoring of power supply status
- Unitized design features a tamper-proof encapsulated construction to reduce the risk of damage associated with conventional open control-panel type construction
- Built-in slug-release input converts an AC or DC input to the appropriate DC signal for integration with the 200 Series and E68 Series zero pressure accumulation systems
- Dual output connection terminals to make it easy and convenient to locate the power supply at the center of the cable run
- Power switch protected against accidental operation
- Power in and out indicators show status at a glance
- Conduit entry box for NEC compliance
- Simple mounting with two 1/4-inch bolts
- Rugged die-cast housing
- Fully encapsulated electronics

Standards and Certifications

- UL listed
- CSA approved

Listed

Product Selection

PS256 A_

Sensor Power Supply

Output	Slug Input	Type	Slug Output	Catalog Number
Operating Voltage 105–132 Vac				
27 Vdc, 100 W; short circuit, overload and overvoltage protection (cycle power to reset)	15–132 Vac/Vdc 3 mA minimum	Standard For use with 200 Series and E68 systems	Sinking or sourcing, switch selectable; 80 mA maximum; short circuit protection for loads less than 32 Vac or Vdc (auto reset)	**PS256 A-01B1** ②
	15–132 Vac/Vdc 3 mA minimum	High current slug For use with solenoid valve systems requiring full current slug signals	Sinking only; 100 W output; short circuit, overload and overvoltage protection (cycle power to reset) ①	**PS256 A-04B1** ②

Technical Data and Specifications

Sensor Power Supply

Description	PS256 A-01B1	PS256 A-04B1
Input power	144 W, maximum inrush 30 A from cold start	144 W, maximum inrush 30 A from cold start
Input voltage	105–132 Vac	105–132 Vac
Input current (full load)	105 Vac–1.92 A, 115 Vac–1.65 A, 132 Vac–1.5 A	105 Vac–1.92 A, 115 Vac–1.65 A, 132 Vac–1.5 A
Output power	100 W	100 W
Output voltage	27 Vdc	27 Vdc
Output protection	Short circuit, overload and overvoltage protection (cycle power to reset), diode protected	Short circuit, overload and overvoltage protection (cycle power to reset), diode protected
Regulation	± 3%	± 3%
Slug input	15–132 Vac/Vdc	15–132 Vac/Vdc
Slug output	Sinking or sourcing, switch selectable; 80 mA maximum; short circuit protection for loads less than 32 Vac or Vdc (auto reset)	Sinking only; 100 W output; short circuit, overload and overvoltage protection (cycle power to reset) ①
Indicators	Red LED: AC In; Green LED: DC Out	Red LED: AC In; Green LED: DC Out
DC fail indication output	NO contact, solid-state relay, 80 mA maximum	NO contact, solid-state relay, 80 mA maximum
Temperature range	–13 ° to 131 °F (–25 ° to 55 °C)	–13 ° to 131 °F (–25 ° to 55 °C)
Vibration	20 g	20 g
Enclosure material	Die-cast aluminum	Die-cast aluminum
Enclosure rating	NEMA 1	NEMA 1
Connections	Main output/slug output: Two three-position finger protected barrier strips; AC line input, DC fail indication and slug input: 8-position screw terminal strip inside conduit entry box	Main output/slug output: Two three-position finger protected barrier strips; AC line input, DC fail indication and slug input: 8-position screw terminal strip inside conduit entry box

Notes

① Total output power of supply is 100 W. Total supply output power (100 W) = main output power + slug output power.

② Stocked product, typical order quantities guaranteed in stock.

Wiring Diagram

Sensor Power Supply

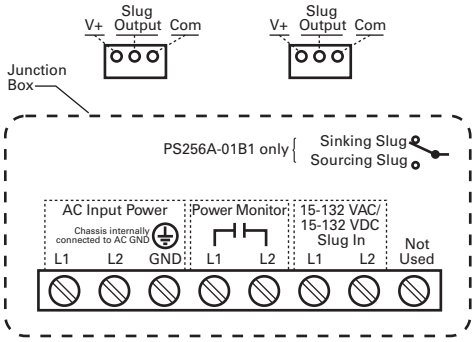

Dimensions

Approximate Dimensions in Inches (mm)

Sensor Power Supply

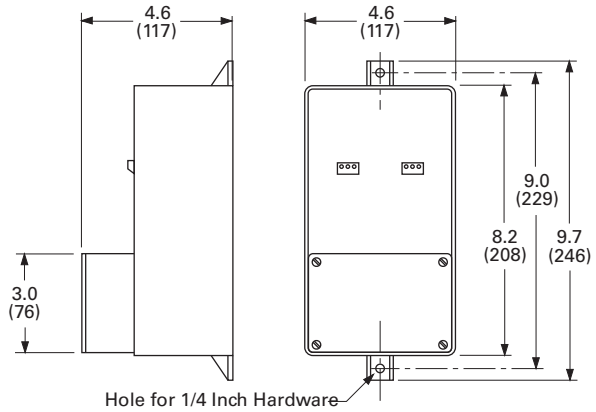

Types MTE and MTK

CE Marked

Type AP

7.1 Transformers

Standards and Certifications V7-T7-2
Catalog Number Selection V7-T7-3
Type MTE V7-T7-4
Type MTK V7-T7-13
CE Marked V7-T7-18
Type AP V7-T7-25

Learn Online

Industrial Control Transformers

Contents

Description	*Page*
Transformers	
Type MTE	**V7-T7-4**
Type MTK	**V7-T7-13**
CE Marked	**V7-T7-18**
Type AP	**V7-T7-25**

Standards and Certifications

Eaton dry-type distribution transformers are approved, listed, recognized or may comply with the following standards.

Engineering Standards

Catalog Product Name	UL Standard ①	UL/cUL File Number	UL Listed Control Number	cUL Energy Efficiency File Number	CSA File Number	Insulation System Temp/°C	kVA Single-Phase	kVA Three-Phase	Applicable IEC Standard
Industrial Control Transformer									
MTE	5085	E46323	702X	—	—	105	0.025–1.5	N/A	61558
MTK	5085	E46323	702X	—	—	180	0.05–5	N/A	61558
Encapsulated Transformer									
AP	5085	E10156	591H	—	—	180	3–10	N/A	61558
AP	1561	E78389	591H	—	—	180	15	N/A	61558
EP	5085	E10156	591H	—	LR60545	180	0.05–10	N/A	61558
EP	1561	E78389	591H	EV157 ②	LR60545 ③	180	15–50	N/A	61558 ④ / 726 ⑤
EPT	5085	E10156	591H	—	LR60545	180	N/A	3–9	61558 ⑥ / 726 ⑦
EPT	1561	E78389	591H	EV157 ⑧	LR60545 ⑨	180	N/A	15–75	726
MPC	1062	E53449	591H	—	LR60546	180	3–25	15–30	—
Ventilated Transformer									
DS-3	1561	E78389	591H	—	—	220	15–167	N/A	60726
DT-3	1561	E78389	591H	—	—	220	N/A	15–750	60726
KT	1561	E78389	591H	—	—	220	N/A	9–500	N/A

Notes

① UL 5085 replaces UL 506.
② Applies to 25–50 kVA.
③ Applies to 25 kVA.
④ Applies to 15–25 kVA.
⑤ Applies to 37.5 kVA.
⑥ Applies to 3 kVA.
⑦ Applies to 5–9 kVA.
⑧ Applies to 30–75 kVA.
⑨ Applies to 30 kVA.

In addition to the above standards, Eaton dry-type distribution transformers are also manufactured in compliance with the applicable standards listed below.

Not all of the following standards apply to every transformer.

NEC: National Electrical Code®.

NEMA ST-1: Specialty Transformers (C89.1) (control transformers).

NEMA ST-20: General-Purpose Transformers.

NEMA 250: Enclosures for Electrical Equipment (1000 volts maximum).

IEEE C57.12.01: General Requirements for Dry-Type Distribution and Power Transformers (including those with solid-cast and/or resin-encapsulated windings).

ANSI C57.12.70: Terminal Markings and Connections for Distribution and Power Transformers.

ANSI C57.12.91: Standard Test Code for Dry-Type Distribution and Power Transformers.

CSA C22 No. 47-M90: Air-Cooled Transformers (Dry-Type).

CSA C9-M1981: Dry-Type Transformers.

CSA C22.2 No. 66: Specialty Transformers.

CSA 802-94: Maximum Losses for Distribution, Power and Dry-Type Transformers.

Listed

Listed

Listed

Catalog Number Selection

Industrial Control Transformers, CE Marked Control Transformers—Example: CE0250E2FCE ①

CE 0250 E 2F CE

Type	
C =	Industrial control transformer
CE =	CE Marked control transformer

VA Rating		
0025 = 25	**0350** = 350	**Type AP Only:**
0050 = 50	**0500** = 500	**0003** = 3000
0075 = 75	**0750** = 750	**0005** = 5000
0100 = 100	**1000** = 1000	**0007** = 7500
0150 = 150	**1500** = 1500	**0010** = 10000
0200 = 200	**2000** = 2000	**0015** = 15000
0250 = 250	**3000** = 3000	
0300 = 300	**5000** = 5000	

Transformer Design	
A =	MTA
C =	MTC
E =	MTE
K =	MTK
P =	AP

Voltage		Primary	Secondary
AC	=	380 x 415	24
AG	=	208/240/277/380/480	24
1B	=	120 x 240	24
2A	=	240 x 480, 230 x 460, 220 x 440	120/115/110
2B	=	240 x 480	24
2C	=	240 x 480	120 x 240
2F	=	230/460	115
2G	=	230/460	115/230
2U	=	220/380/440/550, 230/400/460/575, 240/416/480/600	23/110, 24/115, 25/120
2V	=	208/230/400/460/575	24/115/230
2W	=	208/230/400/460/575	115/230
3A	=	208/277	120
3B	=	115	24
3C	=	230/460/575	115/95
3D	=	208/380/416	115/95
4B	=	208/230/460/575	24
4C	=	550/575/600	110/115/120
4D	=	380/400/415	110 x 220
4E	=	208/230/460/575	115
4H	=	380/400/415	22/23/24
4W	=	550/575/600	22/23/24
5E	=	200/220/440, 208/230/460, 240/480	23/110, 24/115, 25/120
6U	=	240/416/480/600, 230/400/460/575, 220/380/440/550, 208/500	99/120/130, 95/115/125, 91/110/120, 85/100/110
7G (Type AP only)	=	240 x 480	120/240

Modifications

Type MTE/MTK
- **CE** = CE Marked control transformer
- **FB** = Factory-mounted two-pole primary fuse block for rejection type fuses
- **FBN** = Factory-mounted two-pole primary fuse block for non-rejection–type fuses
- **Q** = Secondary fuse clips for 1/4 x 1-1/4 inch fuses ②
- **XX** = No secondary fuse clips
- **RT** = Ring type terminals for connection to fuse block
- **ES** = Electrostatic shield
- **FS** = Factory-mounted finger-safe terminal shields

Type AP
- **B** = Bottom mounted
- **S** = Side/wall mounted
- **ES** = Electrostatic shield
- **CU** = Copper windings

Type MTA/MTC
- **FB** = Factory-mounted three-pole fuse block (two-pole primary rejection type with single-pole secondary non-rejection type)
- **ES** = Electrostatic shield
- **L** = Lead terminations

Notes

① For Eaton's dry-type transformers catalog number selection, see Volume 2, **CA08100003E**.

② Fuse clip covers not available with this option.

Contact your local Eaton sales office for voltage combinations not shown. Use table for catalog number breakdown only. Do not use to create catalog numbers because all combinations may not be valid.

Type MTE Transformer

Contents

Description	*Page*
Type MTE	
Product Selection	**V7-T7-5**
Accessories	**V7-T7-10**
Technical Data and Specifications	**V7-T7-10**
Wiring Diagrams	**V7-T7-11**
Type MTK	**V7-T7-13**
CE Marked	**V7-T7-18**
Type AP	**V7-T7-25**

Type MTE

Product Description

Note: The following pages provide listings for most standard transformer ratings and styles. For other ratings or styles not shown, or for special enclosure types (including stainless steel), refer to Eaton.

- Epoxy-encapsulated coils

Application Description

Transformers provide stepped-down voltages to machine tool control devices, enabling control circuits to be isolated from all power and lighting circuits. This allows the use of grounded or ungrounded circuits that are independent of the power or lighting grounds; thus, greater safety is afforded the operator. The control transformer line is particularly adaptable on applications where compact construction is demanded.

Note: The MTG "open core-coil design" has been superseded by the epoxy-encapsulated core-coil design MTE with no change to dimensions or functionality.

Features, Benefits and Functions

- Epoxy encapsulated
- Laminations of high-quality silicon steel to minimize core losses and optimize performance
- Copper magnet wire for high-quality, efficient operation
- Secondary fuse clips where applicable
- Optional primary fusing
- Molded in terminals
- 50/60 Hz operation
- 130°C insulation system standard
- Performance meets/exceeds requirements of ANSI/NEMA ST-1
- Regulation exceeds ANSI/NEMA requirements for all ratings
- 25–1500 VA ratings
- Molded-in terminals for maximum durability

Standards and Certifications

- UL listed
- cUL listed
- RoHS compliant

Listed Listed RoHS COMPLIANT

Industry Standards

All Eaton dry-type distribution and control transformers are built and tested in accordance with applicable NEMA, ANSI and IEEE Standards. All 600 volt class transformers are UL listed unless otherwise noted.

Catalog Number Selection

Please refer to **Page V7-T7-3**.

Product Selection

Additional Product Selection information is available in Volume 2, **CA08100003E**.

Type MTE

Primary: 240 x 480, 230 x 460, 220 x 440 with Jumpers Secondary: 120/115/110 with Fuse Clips for 13/32 x 1-1/2 Fuses

VA	Wiring Diagram ①	Weight Lbs (kg)	Style Number
25	1	1.7 (0.8)	**C0025E2A** ②
50	1	2.6 (1.2)	**C0050E2A** ②
75	1	3.5 (1.6)	**C0075E2A** ②
100	1	4.2 (1.9)	**C0100E2A** ②
150	1	6.7 (3.0)	**C0150E2A**
200	1	8.5 (3.9)	**C0200E2A**
250	1	10.0 (4.5)	**C0250E2A**
300	1	11.3 (5.1)	**C0300E2A**
350	1	13.6 (6.2)	**C0350E2A**
500	1	19.2 (8.7)	**C0500E2A**
750	1	28.1 (12.8)	**C0750E2A**
1000	1	29.5 (13.4)	**C1000E2A**
1500	1	40.0 (18.1)	**C1500E2A**

Primary: 240 x 480 with Jumpers Secondary: 24 with Fuse Clips for 13/32 x 1-1/2 Fuses (through 500 VA)

VA	Wiring Diagram ①	Weight Lbs (kg)	Style Number
50	2	2.7 (1.2)	**C0050E2B** ②
75	2	3.5 (1.6)	**C0075E2B** ②
100	2	4.2 (1.9)	**C0100E2B** ②
150	2	6.7 (3.0)	**C0150E2B**
200	2	8.5 (3.9)	**C0200E2B**
250	2	10.1 (4.6)	**C0250E2B**
300	2	11.4 (5.2)	**C0300E2B**
350	2	13.4 (6.1)	**C0350E2B**
500	2	17.5 (7.9)	**C0500E2B**
750	2	28.1 (12.8)	**C0750E2B**

Primary: 120 X 240 with Jumpers Secondary: 24 with Fuse Clips for 13/32 x 1-1/2 Fuses

VA	Wiring Diagram ①	Weight Lbs (kg)	Style Number
50	3	2.6 (1.2)	**C0050E1B** ②
75	3	3.6 (1.6)	**C0075E1B** ②
100	3	4.4 (2.0)	**C0100E1B** ②
150	3	6.7 (3.0)	**C0150E1B**
200	3	8.3 (3.8)	**C0200E1B**
250	3	10.1 (4.6)	**C0250E1B**
300	3	11.2 (5.1)	**C0300E1B**
350	3	13.2 (6.0)	**C0350E1B**
500	3	17.5 (7.9)	**C0500E1B**

Primary: 208/277 Secondary: 120 with Fuse Clips for 13/32 x 1-1/2 Fuses

VA	Wiring Diagram ①	Weight Lbs (kg)	Style Number
50	4	2.9 (1.3)	**C0050E3A** ②
75	4	3.8 (1.7)	**C0075E3A** ②
100	4	4.5 (2.0)	**C0100E3A** ②
150	4	6.9 (3.1)	**C0150E3A**
200	4	8.7 (3.9)	**C0200E3A**
250	4	10.2 (4.6)	**C0250E3A**
300	4	11.4 (5.2)	**C0300E3A**
350	4	13.7 (6.2)	**C0350E3A**
500	4	17.2 (7.8)	**C0500E3A**
750	4	25.7 (11.7)	**C0750E3A**

Notes

① See **Page V7-T7-11** for wiring diagrams.
② 105°C insulation system.

Primary: 240 x 480 with Jumpers
Secondary: 120 x 240 with Jumpers, Secondary Fuse Clips Not Applicable

VA	Wiring Diagram ①	Weight Lbs (kg)	Style Number
50	11	2.6 (1.2)	**C0050E2CXX** ②
75	11	3.5 (1.6)	**C0075E2CXX** ②
100	11	4.2 (1.9)	**C0100E2CXX** ②
150	11	6.7 (3.1)	**C0150E2CXX**
200	11	8.5 (3.9)	**C0200E2CXX**
250	11	10.0 (4.6)	**C0250E2CXX**
300	11	11.8 (5.4)	**C0300E2CXX**
350	11	13.6 (6.2)	**C0350E2CXX**
500	11	17.5 (8.0)	**C0500E2CXX**
750	11	26.4 (12.0)	**C0750E2CXX**

Primary: 550/575/600
Secondary: 110/115/120 with for 13/32 x 1-1/2 Fuses

VA	Wiring Diagram ①	Weight Lbs (kg)	Style Number
50	10	2.7 (1.2)	**C0050E4C** ②
75	10	3.6 (1.6)	**C0075E4C** ②
100	10	4.2 (1.9)	**C0100E4C** ②
150	10	6.8 (3.1)	**C0150E4C**
200	10	8.4 (3.8)	**C0200E4C**
250	10	10.0 (4.6)	**C0250E4C**
300	10	11.3 (5.1)	**C0300E4C**
350	10	13.6 (6.2)	**C0350E4C**
500	10	16.8 (7.6)	**C0500E4C**
750	10	25.7 (11.7)	**C0750E4C**

Primary: 380/400/415
Secondary: 22/23/24 with Fuse Clips for 13/32 x 1-1/2 Fuses

VA	Wiring Diagram ①	Weight Lbs (kg)	Style Number
50	13	2.5 (1.1)	**C0050E4H** ②
75	13	3.5 (1.6)	**C0075E4H** ②
100	13	4.0 (1.8)	**C0100E4H** ②
150	13	6.5 (3.0)	**C0150E4H**
200	13	8.2 (3.7)	**C0200E4H**
250	13	10.0 (4.5)	**C0250E4H**
300	13	11.0 (5.0)	**C0300E4H**
350	13	13.6 (6.2)	**C0350E4H**
500	13	17.7 (8.0)	**C0500E4H**

Primary: 550/575/600
Secondary: 22/23/24 with Fuse Clips for 13/32 x 1-1/2 Fuses

VA	Wiring Diagram ①	Weight Lbs (kg)	Style Number
50	12	2.5 (1.1)	**C0050E4W** ②
75	12	3.5 (1.6)	**C0075E4W** ②
100	12	4.0 (1.8)	**C0100E4W** ②
150	12	6.5 (3.0)	**C0150E4W**
200	12	8.2 (3.7)	**C0200E4W**
250	12	10.0 (4.5)	**C0250E4W**
300	12	11.0 (5.0)	**C0300E4W**
350	12	13.6 (6.2)	**C0350E4W**
500	12	17.7 (8.0)	**C0500E4W**
750	12	28.0 (12.7)	**C0750E4WXX** ③

Primary: 230/460/575
Secondary: 115/95 with Fuse Clips for 13/32 x 1-1/2 Fuses

VA	Wiring Diagram ①	Weight Lbs (kg)	Style Number
50	5	3.5 (1.6)	**C0050E3C** ②
75	5	4.5 (2.0)	**C0075E3C** ②
100	5	6.0 (2.7)	**C0100E3C** ②
150	5	7.7 (3.5)	**C0150E3C**
200	5	9.0 (4.1)	**C0200E3C**
250	5	9.7 (4.4)	**C0250E3C**
300	5	11.7 (5.3)	**C0300E3C**
350	5	16.5 (7.5)	**C0350E3C**
500	5	21.5 (9.8)	**C0500E3C**
750	5	28.0 (12.7)	**C0750E3C**

Primary: 380/400/415
Secondary: 110 x 220 with Jumpers; Fuse Clips Not Applicable

VA	Wiring Diagram ①	Weight Lbs (kg)	Style Number
50	6	3.0 (1.4)	**C0050E4D** ②
75	6	4.0 (1.8)	**C0075E4D** ②
100	6	5.2 (2.4)	**C0100E4D** ②
150	6	7.0 (3.2)	**C0150E4D**
200	6	8.7 (3.9)	**C0200E4D**
250	6	10.2 (4.6)	**C0250E4D**
300	6	11.0 (5.0)	**C0300E4D**
350	6	13.0 (5.9)	**C0350E4D**
500	6	20.0 (9.1)	**C0500E4D**
750	6	28.0 (12.7)	**C0750E4D**

Notes

① See **Page V7-T7-11** for wiring diagrams.
② 105°C insulation system.
③ Secondary fuse clips are not available on this catalog number.

Primary: 200/220/440, 208/230/460, 240/480
Secondary: 23/110, 24/115, 25/120 with Fuse Clips for 13/32 x 1-1/2 Fuses

VA	Wiring Diagram ①	Weight Lbs (kg)	Style Number
50	7	3.4 (1.5)	**C0050E5E** ②
75	7	4.8 (2.2)	**C0075E5E** ②
100	7	5.9 (2.7)	**C0100E5E** ②
150	7	7.9 (3.6)	**C0150E5E**
200	7	10.6 (4.8)	**C0200E5E**
250	7	13.9 (6.3)	**C0250E5E**
300	7	15.5 (7.0)	**C0300E5E**
350	7	16.8 (7.6)	**C0350E5E**
500	7	23.4 (10.6)	**C0500E5E**

Universal Design (MTE Epoxy Encapsulated)
Primary: 240/416/480/600, 230/400460/575, 220/380/440/550, 208/500
Secondary: 99/120/130, 95/115/125, 91/110/120, 85/100/110 with Fuse Clips for 13/32 x 1-1/2 Fuses

VA	Wiring Diagram ①	Weight Lbs (kg)	Style Number
50	8	4.0 (1.8)	**C0050E6U** ②③
100	8	6.6 (3.0)	**C0100E6U** ②③
150	8	8.8 (4.0)	**C0150E6U** ②④
250	8	14.7 (6.7)	**C0250E6U** ②④
350	8	18.6 (8.4)	**C0350E6U** ②④
500	8	25.6 (11.6)	**C0500E6U** ②④
750	8	30.5 (13.8)	**C0750E6U** ②④

Transformers with Primary Fuse Blocks

Primary: 240 x 480, 230 x 460, 220 x 440 with Jumpers and Two-Pole Primary Fuse Block for Rejection-Type Fuses
Secondary: 120/115/110 with Fuse Clips for 13/32 x 1-1/2 Fuses

VA	Wiring Diagram ①	Weight Lbs (kg)	Style Number
50	1	2.8 (1.3)	**C0050E2AFB** ②
75	1	3.7 (1.7)	**C0075E2AFB** ②
100	1	4.4 (2.0)	**C0100E2AFB** ②
150	1	6.9 (3.1)	**C0150E2AFB**
200	1	8.7 (3.9)	**C0200E2AFB**
250	1	10.2 (4.6)	**C0250E2AFB**
300	1	11.5 (5.2)	**C0300E2AFB**
350	1	13.8 (6.3)	**C0350E2AFB**
500	1	19.4 (8.8)	**C0500E2AFB**
750	1	28.3 (12.8)	**C0750E2AFB**
1000	1	29.7 (13.4)	**C1000E2AFB**
1500	1	40.2 (18.1)	**C1500E2AFB**

Primary: 240 x 480 with Jumpers and Two-Pole Primary Fuse Block for Rejection-Type Fuses
Secondary: 24 with Fuse Clips for 13/32 x 1-1/2 Fuses

VA	Wiring Diagram ①	Weight Lbs (kg)	Style Number
50	2	2.8 (1.3)	**C0050E2BFB** ②
75	2	3.8 (1.7)	**C0075E2BFB** ②
100	2	4.4 (2.1)	**C0100E2BFB** ②
150	2	6.9 (3.1)	**C0150E2BFB**
200	2	8.7 (3.9)	**C0200E2BFB**
250	2	10.3 (4.7)	**C0250E2BFB**
300	2	11.6 (5.3)	**C0300E2BFB**
350	2	13.6 (6.2)	**C0350E2BFB**
500	2	17.7 (8.0)	**C0500E2BFB**

Notes

① See **Page V7-T7-11** for wiring diagrams.
② 105°C insulation system.
③ Type MTG open core-coil universal design has been superseded by Type MTE epoxy encapsulated universal design with no changes to form, fit or function.
④ Type MTE epoxy encapsulated universal design.

Primary: 120 x 240 with Jumpers and Two-Pole Primary Fuse Block for Rejection-Type Fuses Secondary: 24 with Fuse Clips for 13/32 x 1-1/2 Fuses

VA	Wiring Diagram ①	Weight Lbs (kg)	Style Number
50	3	2.8 (1.3)	**C0050E1BFB** ②
75	3	3.8 (1.7)	**C0075E1BFB** ②
100	3	4.6 (2.1)	**C0100E1BFB** ②
150	3	6.9 (3.1)	**C0150E1BFB**
200	3	8.5 (3.9)	**C0200E1BFB**
250	3	10.3 (4.7)	**C0250E1BFB**
300	3	11.4 (5.2)	**C0300E1BFB**
350	3	13.4 (6.1)	**C0350E1BFB**
500	3	17.7 (8.0)	**C0500E1BFB**

Primary: 208/277 with Two-Pole Primary Fuse Block for Rejection-Type Fuses Secondary: 120 with Fuse Clips for 13/32 x 1-1/2 Fuses

VA	Wiring Diagram ①	Weight Lbs (kg)	Style Number
50	4	3.1 (1.4)	**C0050E3AFB** ②
75	4	4.0 (1.8)	**C0075E3AFB** ②
100	4	4.7 (2.1)	**C0100E3AFB** ②
150	4	7.1 (3.2)	**C0150E3AFB**
200	4	8.9 (4.0)	**C0200E3AFB**
250	4	10.4 (4.7)	**C0250E3AFB**
300	4	11.6 (5.3)	**C0300E3AFB**
350	4	13.9 (6.3)	**C0350E3AFB**
500	4	17.4 (7.9)	**C0500E3AFB**

Primary: 550/575/600 with Two-Pole Primary Fuse Block for Rejection-Type Fuses Secondary: 110/115/120 with Fuse Clips for 13/32 x 1-1/2 Fuses

VA	Wiring Diagram ①	Weight Lbs (kg)	Style Number
50	10	2.9 (1.3)	**C0050E4CFB** ②
75	10	3.8 (1.7)	**C0075E4CFB** ②
100	10	4.4 (2.0)	**C0100E4CFB** ②
150	10	7.0 (3.2)	**C0150E4CFB**
200	10	8.6 (3.9)	**C0200E4CFB**
250	10	10.2 (4.6)	**C0250E4CFB**
300	10	11.5 (5.2)	**C0300E4CFB**
350	10	13.8 (6.3)	**C0350E4CFB**
500	10	17.0 (7.7)	**C0500E4CFB**
750	10	25.9 (11.8)	**C0750E4CFB**

Primary: 380/400/415 with Two-Pole Primary Fuse Block for Rejection-Type Fuses Secondary: 22/23/24 with Fuse Clips for 13/32 x 1-1/2 Fuses

VA	Wiring Diagram ①	Weight Lbs (kg)	Style Number
50	13	2.6 (1.2)	**C0050E4HFB** ②
75	13	3.7 (1.7)	**C0075E4HFB** ②
100	13	4.2 (1.9)	**C0100E4HFB** ②
150	13	6.7 (3.0)	**C0150E4HFB**
200	13	8.4 (3.8)	**C0200E4HFB**
250	13	10.2 (4.6)	**C0250E4HFB**

Primary: 550/575/600 with Two-Pole Primary Fuse Block for Rejection-Type Fuses Secondary: 22/23/24 with Fuse Clips for 13/32 x 11/2 Fuses

VA	Wiring Diagram ①	Weight Lbs (kg)	Style Number
50	12	2.7 (1.2)	**C0050E4WFB** ②
75	12	3.7 (1.7)	**C0075E4WFB** ②
100	12	4.2 (1.9)	**C0100E4WFB** ②
150	12	6.7 (3.0)	**C0150E4WFB**
200	12	8.4 (3.8)	**C0200E4WFB**
250	12	10.2 (4.6)	**C0250E4WFB**

Primary: 230/460/575 with Two-Pole Primary Fuse Block for Rejection-Type Fuses Secondary: 115/95 with Fuse Clips for 13/32 x 1-1/2 Fuses

VA	Wiring Diagram ①	Weight Lbs (kg)	Style Number
50	5	3.7 (1.7)	**C0050E3CFB** ②
75	5	4.7 (2.1)	**C0075E3CFB** ②
100	5	6.2 (2.8)	**C0100E3CFB** ②
150	5	7.9 (3.6)	**C0150E3CFB**
200	5	9.2 (4.2)	**C0200E3CFB**
250	5	9.9 (4.5)	**C0250E3CFB**
300	5	11.9 (5.4)	**C0300E3CFB**
350	5	16.7 (7.6)	**C0350E3CFB**
500	5	21.7 (9.9)	**C0500E3CFB**

Notes

① See **Page V7-T7-11** for wiring diagrams.

② 105°C insulation system.

Primary: 380/400/415 with Two-Pole Primary Fuse Block for Rejection-Type Fuses Secondary: 110 x 220 with Jumpers; Fuse Clips Not Available

VA	Wiring Diagram ①	Weight Lbs (kg)	Style Number
50	6	3.2 (1.5)	**C0050E4DFB** ②
75	6	4.2 (1.9)	**C0075E4DFB** ②
100	6	5.4 (2.5)	**C0100E4DFB** ②
150	6	7.2 (3.3)	**C0150E4DFB**
200	6	8.9 (4.0)	**C0200E4DFB**
250	6	10.4 (4.7)	**C0250E4DFB**
300	6	11.2 (5.1)	**C0300E4DFB**
350	6	13.2 (6.0)	**C0350E4DFB**
500	6	20.2 (9.2)	**C0500E4DFB**

Primary: 200/220/440, 208/230/460, 240/480 with Two-Pole Primary Fuse Block for Rejection-Type Fuses Secondary: 23/110, 24/115, 25/120 with Fuse Clips for 13/32 x 1-1/2 Fuses

VA	Wiring Diagram ①	Weight Lbs (kg)	Style Number
50	7	3.6 (1.6)	**C0050E5EFB** ②
75	7	5.0 (2.3)	**C0075E5EFB** ②
100	7	6.1 (2.8)	**C0100E5EFB** ②
150	7	8.1 (3.7)	**C0150E5EFB**
200	7	10.8 (4.9)	**C0200E5EFB**
250	7	14.1 (6.4)	**C0250E5EFB**
300	7	15.7 (7.1)	**C0300E5EFB**
350	7	17.0 (7.7)	**C0350E5EFB**
500	7	23.6 (10.7)	**C0500E5EFB**

Universal Design (MTE Epoxy Encapsulated) Primary: 240/416/480/600, 230/400/460/575, 220/380/440/550, 208/500 with Two-Pole Primary Fuse Block for Rejection-Type Fuses Secondary: 99/120/130, 95/115/125, 91/110/120, 85/100/110 with Fuse Clips for 13/32 x 1-1/2 Fuses

VA	Wiring Diagram ①	Weight Lbs (kg)	Style Number
50	8	4.2 (1.9)	**C0050E6UFB** ②③
100	8	6.8 (3.1)	**C0100E6UFB** ②③
150	8	9.0 (4.1)	**C0150E6UFB** ②④
250	8	14.9 (6.8)	**C0250E6UFB** ②④
350	8	18.8 (8.5)	**C0350E6UFB** ②④
500	8	25.8 (11.7)	**C0500E6UFB** ②④

Notes

① See **Page V7-T7-11** for wiring diagrams.
② 105°C insulation system.
③ Type MTG open core-coil universal design has been superseded by Type MTE epoxy encapsulated universal design with no changes to form, fit or function.
④ Type MTE epoxy encapsulated universal design.

Accessories

Primary Fuse Kit

The primary fuse kit includes a two-pole class CC fuse block, instructions, and all associated mounting and wiring hardware. Fuses are not included. When installed, the primary fuse kit will add a maximum of 11/16 inch to the transformer depth and 1-15/16 inches to the transformer height.

Primary Fuse Kit

Description	Catalog Number
Primary fuse kit	**PFK1**

Finger-Safe Terminal Covers (Optional)

- Fits CE Marked designs 50–750 VA
- Fits MTE designs 0.25–750 VA

Finger-Safe Terminal Covers

	Description	Catalog Number
FSK4 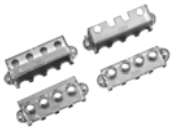	Four terminal transformers	**FSK4**
	Four terminal Series 2 transformers only	**FSK4S2**
FSK6	Six terminal transformers	**FSK6**

Finger-Safe Primary Fuse Block Covers

- Fits two-pole primary fuse blocks on MTE designs
- No fuse block covers are available for transformers with suffix "FBQ"

Finger-Safe Primary Fuse Block Covers

	Description	Catalog Number
FSKFB	Primary fuse block covers	**FSKFB**

Secondary Fuse Clip

Secondary Fuse Clip

Description	Catalog Number
Fits 500 VA and smaller models	**SFCS**
Fits models greater than 500 VA	**SFCL**

Technical Data and Specifications

Insulation System and Temperature Rise

Industry standards classify insulation systems and rise as shown below:

Insulation System Classification

Ambient	+ Winding Rise	+ Hot Spot	= Temp. Class
40°C	55°C	10°C	105°C
40°C	80°C	30°C	150°C
25°C	135°C	20°C	180°C
40°C	115°C	30°C	185°C
40°C	150°C	30°C	220°C

The design life of transformers having different insulation systems is the same—the lower-temperature systems are designed for the same life as the higher-temperature systems.

Series-Multiple Windings

Series-multiple windings consist of two similar coils in each winding that can be connected in series or parallel (multiple). Transformers with series-multiple windings are designated with an "x" or "/" between the voltage ratings, such as voltages of "120/240" or "240 x 480." If the series-multiple winding is designated by an "x," the winding can be connected only for a series or parallel. With the "/" designation, a mid-point also becomes available in addition to the series or parallel connection. As an example, a 120 x 240 winding can be connected for either 120 (parallel) or 240 (series), but a 120/240 winding can be connected for 120 (parallel), 240 (series) or 240 with a 120 mid-point.

For additional information, please refer to Volume 2, **CA08100003E**.

Wiring Diagrams

Diagram 1

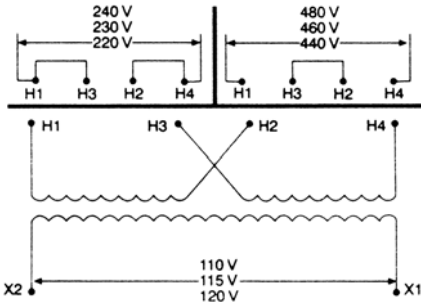

Diagram 2

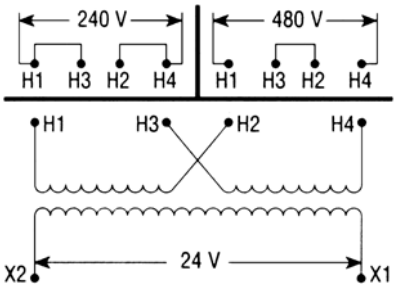

Diagram 3

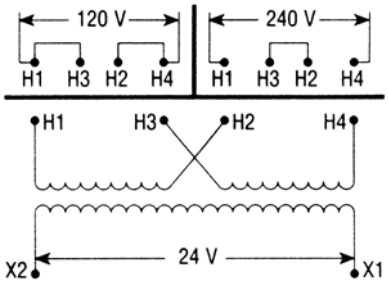

Diagram 4

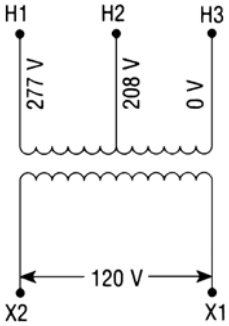

Diagram 5

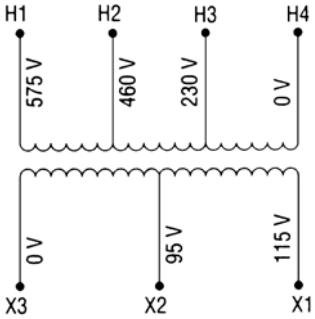

Diagram 6

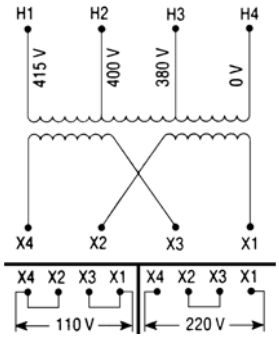

Diagram 7

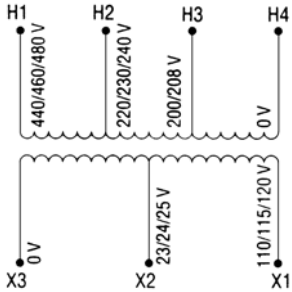

Diagram 8

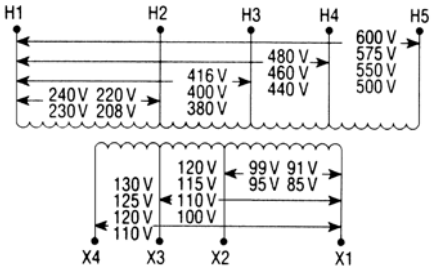

Diagram 9

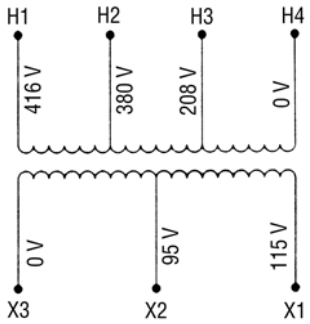

Diagram 10

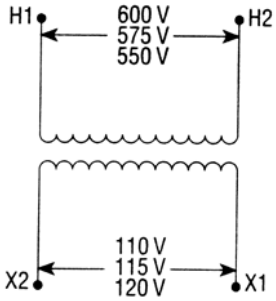

Diagram 11

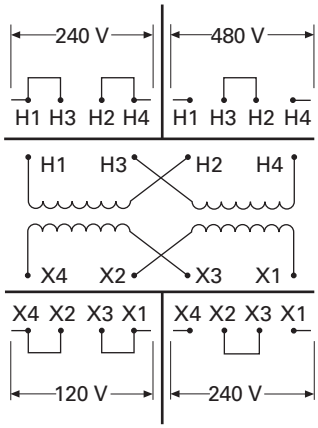

Diagram 12

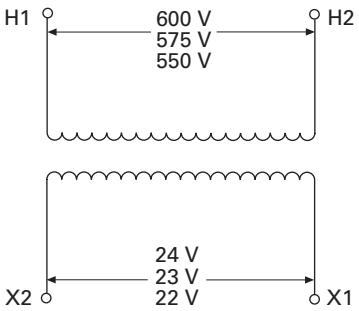

Diagram 13

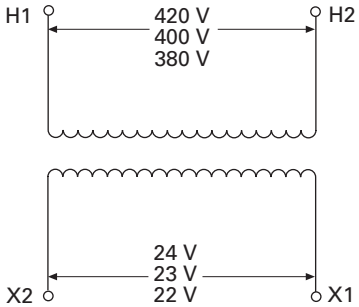

Diagram 14

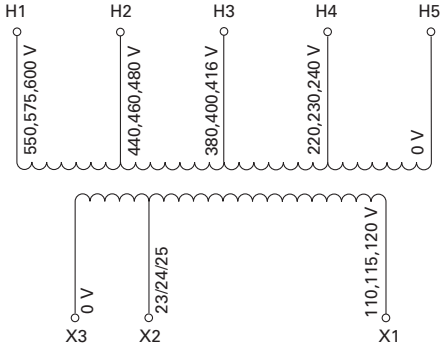

Diagram 15

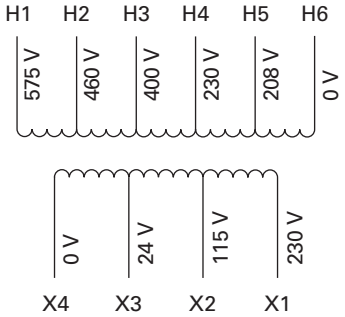

Diagram 16

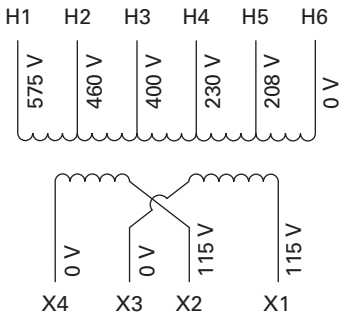

Type MTK Transformer

Contents

Description	*Page*
Type MTE	**V7-T7-4**
Type MTK	
Product Selection	**V7-T7-14**
Technical Data and Specifications	**V7-T7-15**
Wiring Diagrams	**V7-T7-15**
CE Marked	**V7-T7-18**
Type AP	**V7-T7-25**

Type MTK

Product Description

Note: The following pages provide listings for most standard transformer ratings and styles. For other ratings or styles not shown, or for special enclosure types (including stainless steel), refer to Eaton.

- Epoxy resin-impregnated coil
- Economical solution for high inrush applications

Application Description

Transformers provide stepped-down voltages to machine tool control devices, enabling control circuits to be isolated from all power and lighting circuits. This allows the use of grounded or ungrounded circuits that are independent of the power or lighting grounds; thus, greater safety is afforded the operator. The control transformer line is particularly adaptable on applications where compact construction is demanded.

Features, Benefits and Functions

- Epoxy resin impregnated coil design
- Copper magnet wire for high-quality, efficient operation
- 50/60 Hz operation
- 180°C insulation system
- Performance meets/exceeds requirements of ANSI/NEMA ST-1
- Regulation exceeds ANSI/NEMA requirements for all ratings
- 500–5000 VA ratings

Standards and Certifications

- UL listed
- cUL listed
- RoHS compliant

Listed Listed

Industry Standards

All Eaton dry-type distribution and control transformers are built and tested in accordance with applicable NEMA, ANSI and IEEE Standards. All 600 volt class transformers are UL listed unless otherwise noted.

Catalog Number Selection

Please refer to **Page V7-T7-3**.

Product Selection

Additional Product Selection information is available in Volume 2, **CA08100003E**.

Type MTK

Primary: 240 x 480, 230 x 460, 220 x 440 Secondary: 120/115/110

VA	Wiring Diagram ①	Weight Lbs (kg)	Style Number
500	1	13.0 (5.9)	**C0500K2A**
750	1	19.5 (8.9)	**C0750K2A**
1000	1	29.8 (13.6)	**C1000K2A**
1500	1	30.0 (13.6)	**C1500K2A**
2000	1	38.0 (17.3)	**C2000K2A**
3000	1	53.0 (24.1)	**C3000K2A**
5000	1	89.0 (40.5)	**C5000K2A**

Primary: 208/277 Secondary: 120

VA	Wiring Diagram ①	Weight Lbs (kg)	Style Number
1000	4	29.0 (13.1)	**C1000K3A**
1500	4	33.0 (15.0)	**C1500K3A**
2000	4	43.0 (19.5)	**C2000K3A**
3000	4	64.0 (29.0)	**C3000K3A**
5000	4	102.0 (46.3)	**C5000K3A**

Primary: 230/460/575 Secondary: 115/95

VA	Wiring Diagram ①	Weight Lbs (kg)	Style Number
1000	5	29.2 (13.3)	**C1000K3C**
1500	5	33.5 (15.2)	**C1500K3C**
2000	5	42.5 (19.3)	**C2000K3C**
3000	5	63.7 (29.0)	**C3000K3C**
5000	5	102.0 (46.4)	**C5000K3C**

Primary: 208/380/416 Secondary: 115/95

VA	Wiring Diagram ①	Weight Lbs (kg)	Style Number
1000	9	29.0 (13.1)	**C1000K3D**
1500	9	43.0 (19.5)	**C1500K3D**
2000	9	55.0 (25.0)	**C2000K3D**
3000	9	74.0 (33.5)	**C3000K3D**
5000	9	108.0 (49.0)	**C5000K3D**

Primary: 550/575/600 Secondary: 110/115/120

VA	Wiring Diagram ①	Weight Lbs (kg)	Style Number
1000	10	29.0 (13.1)	**C1000K4C**
1500	10	33.0 (15.0)	**C1500K4C**
2000	10	43.0 (19.5)	**C2000K4C**
3000	10	64.0 (29.0)	**C3000K4C**
5000	10	102.0 (46.3)	**C5000K4C**

Primary: 380/400/415 Secondary: 110 x 220

VA	Wiring Diagram ①	Weight Lbs (kg)	Style Number
1000	6	28.0 (12.7)	**C1000K4D**
1500	6	33.0 (15.0)	**C1500K4D**
2000	6	43.0 (19.5)	**C2000K4D**
3000	6	64.0 (29.0)	**C3000K4D**
5000	6	102.0 (46.3)	**C5000K4D**

Primary: 240 x 480 with Jumpers Secondary: 120 x 240 with Jumpers, Secondary Fuse Clips Not Applicable

VA	Wiring Diagram ①	Weight Lbs (kg)	Style Number
1000	11	26.4 (12.0)	**C1000K2CXX**
1500	11	31.0 (14.1)	**C1500K2CXX**
2000	11	40.0 (18.2)	**C2000K2CXX**
3000	11	56.0 (25.5)	**C3000K2CXX**
5000	11	85.5 (28.9)	**C5000K2CXX**

Primary: 120 x 240 with Jumpers Secondary: 24

VA	Wiring Diagram ①	Weight Lbs (kg)	Style Number
750	3	19.0 (8.6)	**C0750K1B**
1000	3	26.4 (12.0)	**C1000K1B**

Primary: 240/416/480/600, 230/400/460/575, 220/380/440/550, 208/500 Secondary: 99/120/130, 95/115/125, 91/110/120, 85/100/110

VA	Wiring Diagram ①	Weight Lbs (kg)	Style Number
1000	8	26.5 (12.0)	**C1000K6U**
1500	8	38.5 (17.5)	**C1500K6U**
2000	8	52.0 (23.6)	**C2000K6U**
3000	8	68.0 (30.9)	**C3000K6U**
5000	8	105.0 (47.7)	**C5000K6U**

Note

① See **Page V7-T7-15** for wiring diagrams.

Technical Data and Specifications

Insulation System and Temperature Rise

Industry standards classify insulation systems and rise as shown below:

Insulation System Classification

Ambient	+ Winding Rise	+ Hot Spot	= Temp. Class
40°C	55°C	10°C	105°C
40°C	80°C	30°C	150°C
25°C	135°C	20°C	180°C
40°C	115°C	30°C	185°C
40°C	150°C	30°C	220°C

The design life of transformers having different insulation systems is the same—the lower-temperature systems are designed for the same life as the higher-temperature systems.

Series-Multiple Windings

Series-multiple windings consist of two similar coils in each winding that can be connected in series or parallel (multiple). Transformers with series-multiple windings are designated with an "x" or "/" between the voltage ratings, such as voltages of "120/240" or "240 x 480." If the series-multiple winding is designated by an "x," the winding can be connected only for a series or parallel. With the "/" designation, a mid-point also becomes available in addition to the series or parallel connection. As an example, a 120 x 240 winding can be connected for either 120 (parallel) or 240 (series), but a 120/240 winding can be connected for 120 (parallel), 240 (series) or 240 with a 120 mid-point.

For additional information, please refer to Volume 2, **CA08100003E**.

Wiring Diagrams

Diagram 1

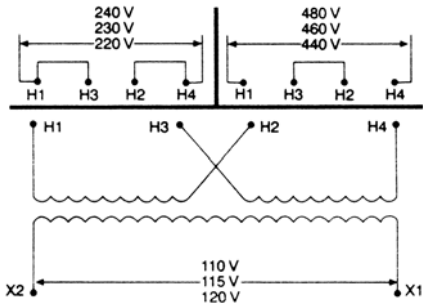

Diagram 2

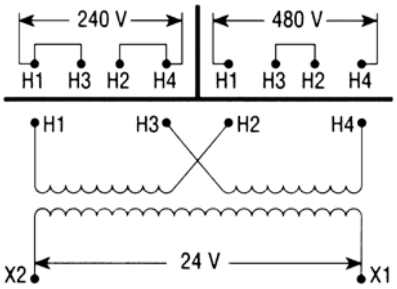

Diagram 3

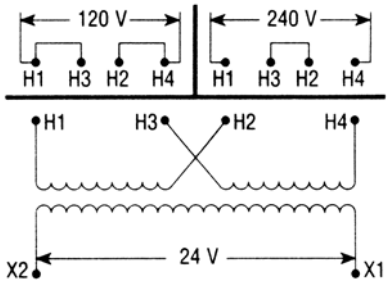

Diagram 4

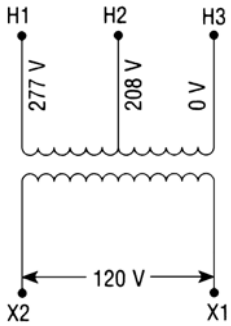

Diagram 5

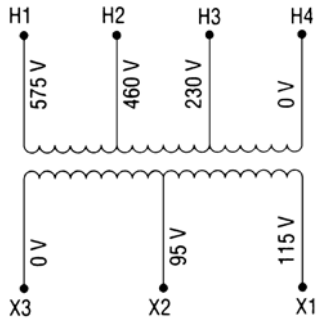

Diagram 6

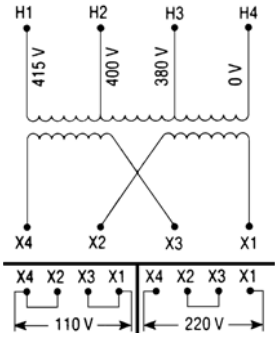

Diagram 7

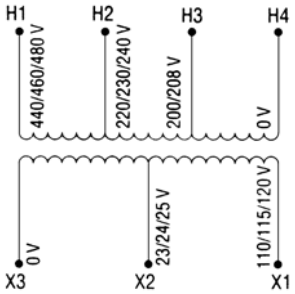

Diagram 8

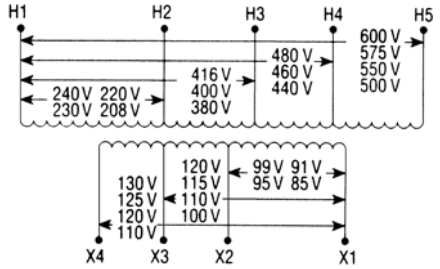

Diagram 9

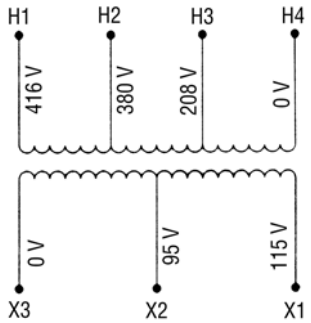

Diagram 10

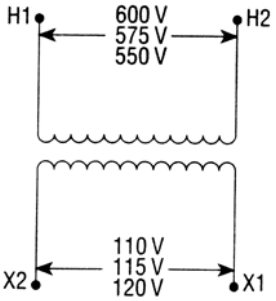

Diagram 11

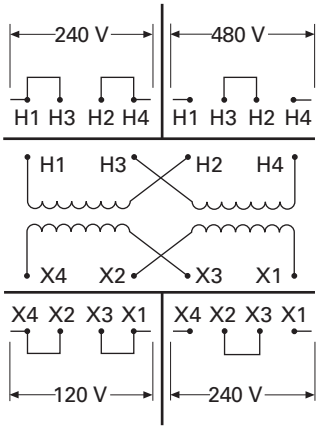

Diagram 12

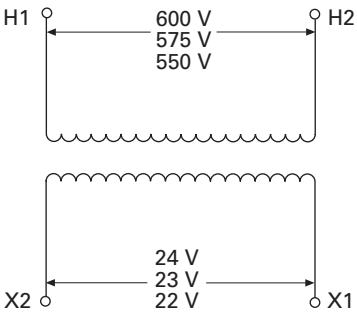

Diagram 13

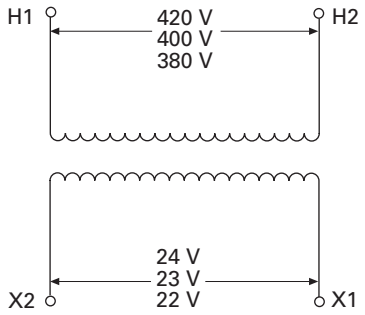

Diagram 14

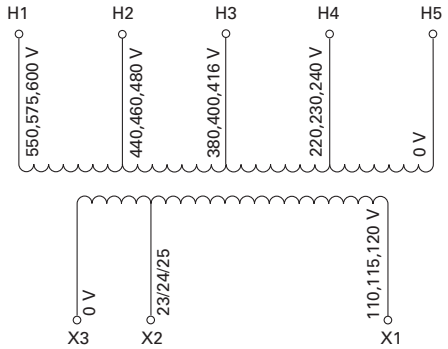

Diagram 15

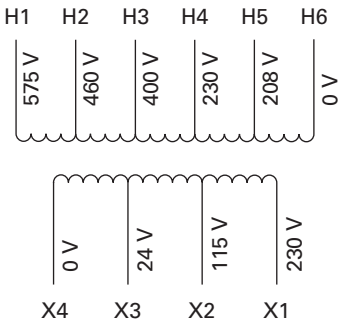

Diagram 16

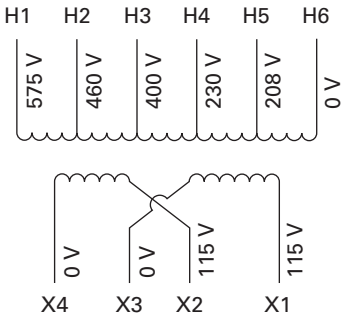

Type MTE CE-Marked CPT

Contents

Description	*Page*
Type MTE	**V7-T7-4**
Type MTK	**V7-T7-13**
CE Marked	
Product Selection	**V7-T7-19**
Accessories	**V7-T7-21**
Technical Data and Specifications	**V7-T7-21**
Wiring Diagrams	**V7-T7-22**
Type AP	**V7-T7-25**

CE Marked

Product Description

Note: The following pages provide listings for most standard transformer ratings and styles. For other ratings or styles not shown, or for special enclosure types (including stainless steel), refer to Eaton.

Application Description

Transformers provide stepped-down voltages to machine tool control devices, enabling control circuits to be isolated from all power and lighting circuits. This allows the use of grounded or ungrounded circuits that are independent of the power or lighting grounds; thus, greater safety is afforded the operator. The control transformer line is particularly adaptable on applications where compact construction is demanded.

Features, Benefits and Functions

Type MTE

- Epoxy encapsulated coil design
- Copper magnet wire for high-quality, efficient operation
- Laminations of high-quality silicon steel to minimize core losses and optimize performance
- Molded-in terminals
- 50/60 Hz operation
- 130°C insulation system standard
- Performance meets/exceeds requirements of ANSI/NEMA ST-1
- Regulation exceeds ANSI/NEMA requirements for all ratings
- Non-short circuit-proof transformer, isolation type

Type MTK

- Epoxy resin-impregnated coil design
- Copper magnet wire for high-quality, efficient operation
- 50/60 Hz operation
- 180°C insulation system
- Performance meets/exceeds requirements of ANSI/NEMA ST-1
- Regulation exceeds ANSI/NEMA requirements for all ratings
- 500–5000 VA ratings

Standards and Certifications

- UL listed
- cUL listed
- CE Marked units comply with IEC EN-61558-2
- RoHS compliant

Listed Listed

RoHS COMPLIANT

Industry Standards

All Eaton dry-type distribution and control transformers are built and tested in accordance with applicable NEMA, ANSI and IEEE Standards. All 600 volt class transformers are UL listed unless otherwise noted.

Catalog Number Selection

Please refer to **Page V7-T7-3**.

Product Selection

Additional Product Selection information is available in Volume 2, **CA08100003E**.

Type MTE CE Marked IP00

Primary: 240 x 480, 230 x 460, 220 x 440 with Jumpers
Secondary: 120/115/110

VA	Wiring Diagram ①	Weight Lbs (kg)	Style Number
50	1	3.5 (1.6)	**CE0050E2ACE** ②
75	1	4.8 (2.2)	**CE0075E2ACE** ②
100	1	5.9 (2.7)	**CE0100E2ACE** ②
150	1	8.5 (3.9)	**CE0150E2ACE**
200	1	10.6 (4.8)	**CE0200E2ACE**
250	1	11.3 (5.1)	**CE0250E2ACE**
300	1	13.2 (6.0)	**CE0300E2ACE**
350	1	14.9 (6.8)	**CE0350E2ACE**
500	1	21.0 (9.5)	**CE0500E2ACE**
750	1	29.8 (13.5)	**CE0750E2ACE**

Primary: 550/575/600
Secondary: 110/115/1204

VA	Wiring Diagram ①	Weight Lbs (kg)	Style Number
50	10	3.5 (1.6)	**CE0050E4CCE** ②
75	10	4.8 (2.2)	**CE0075E4CCE** ②
100	10	5.9 (2.7)	**CE0100E4CCE** ②
150	10	8.5 (3.9)	**CE0150E4CCE**
200	10	10.6 (4.8)	**CE0200E4CCE**
250	10	11.3 (5.1)	**CE0250E4CCE**
300	10	13.2 (6.0)	**CE0300E4CCE**
350	10	14.9 (6.8)	**CE0350E4CCE**
500	10	21.0 (9.5)	**CE0500E4CCE**
750	10	29.8 (13.5)	**CE0750E4CCE**

Primary: 240 x 480 with Jumpers
Secondary: 24

VA	Wiring Diagram ①	Weight Lbs (kg)	Style Number
50	2	3.4 (1.5)	**CE0050E2BCE** ②
75	2	4.2 (1.9)	**CE0075E2BCE** ②
100	2	5.9 (2.7)	**CE0100E2BCE** ②
150	2	8.5 (3.9)	**CE0150E2BCE**
200	2	10.6 (4.5)	**CE0200E2BCE**
250	2	11.3 (5.1)	**CE0250E2BCE**
300	2	13.2 (6.0)	**CE0300E2BCE**
350	2	14.9 (6.8)	**CE0350E2BCE**
500	2	19.2 (8.7)	**CE0500E2BCE**
750	2	28.1 (12.8)	**CE0750E2BCE**

Primary: 380/400/415
Secondary: 110 x 220 with Jumpers

VA	Wiring Diagram ①	Weight Lbs (kg)	Style Number
50	6	3.5 (1.6)	**CE0050E4DCE** ②
75	6	4.8 (2.2)	**CE0075E4DCE** ②
100	6	5.9 (2.7)	**CE0100E4DCE** ②
150	6	8.5 (3.9)	**CE0150E4DCE**
200	6	10.6 (4.8)	**CE0200E4DCE**
250	6	11.3 (5.1)	**CE0250E4DCE**
300	6	13.2 (6.0)	**CE0300E4DCE**
350	6	15.2 (6.9)	**CE0350E4DCE**
500	6	21.0 (9.5)	**CE0500E4DCE**
750	6	29.8 (13.5)	**CE0750E4DCE**

Primary: 120 x 240 with Jumpers
Secondary: 24

VA	Wiring Diagram ①	Weight Lbs (kg)	Style Number
50	3	3.4 (1.5)	**CE0050E1BCE** ②
75	3	4.2 (1.9)	**CE0075E1BCE** ②
100	3	5.9 (2.7)	**CE0100E1BCE** ②
150	3	8.5 (3.9)	**CE0150E1BCE**
200	3	10.6 (4.5)	**CE0200E1BCE**
250	3	11.3 (5.1)	**CE0250E1BCE**
300	3	13.2 (6.0)	**CE0300E1BCE**
350	3	14.9 (6.8)	**CE0350E1BCE**
500	3	19.2 (8.7)	**CE0500E1BCE**
750	3	29.8 (13.5)	**CE0750E1BCE**

Primary: 200/220/440, 208/230/460, 240/480
Secondary: 23/110, 24/115, 25/120

VA	Wiring Diagram ①	Weight Lbs (kg)	Style Number
50	7	4.2 (1.9)	**CE0050E5ECE** ②
75	7	5.9 (2.7)	**CE0075E5ECE** ②
100	7	7.9 (3.6)	**CE0100E5ECE** ②
150	7	10.0 (4.5)	**CE0150E5ECE**
200	7	12.8 (5.8)	**CE0200E5ECE**
250	7	15.2 (6.9)	**CE0250E5ECE**
300	7	16.8 (7.6)	**CE0300E5ECE**
350	7	19.2 (8.7)	**CE0350E5ECE**
500	7	27.0 (12.3)	**CE0500E5ECE**

Notes

① See **Page V7-T7-22** for wiring diagrams.

② 105°C insulation system.

Transformers are designed to operate in a maximum ambient of 40°C. Contact your local Eaton sales office for availability on additional CE Marked control transformers. For other ratings or styles not shown, refer to Eaton.

Type MTK CE Marked with Factory Mounted Finger-Safe Terminal Covers IP20

Primary: 240 x 480, 230 x 460, 220 x 440 with Jumpers
Secondary: 120/115/110

VA	Terminal Type	Wiring Diagram ①	Weight Lbs (kg)	Style Number
250	A	1	8.8 (4.0)	**CE0250K2ACEFS**
300	A	1	11.0 (5.0)	**CE0300K2ACEFS**
350	A	1	11.2 (5.1)	**CE0350K2ACEFS**
500	A	1	14.8 (6.7)	**CE0500K2ACEFS**
750	A	1	18.0 (8.2)	**CE0750K2ACEFS**
1000	A	1	26.3 (11.9)	**CE1000K2ACEFS**
1500	C	1	40.0 (18.1)	**CE1500K2ACEFS**
2000	C	1	45.1 (20.5)	**CE2000K2ACEFS**
3000	C	1	65.2 (29.6)	**CE3000K2ACEFS**
5000	C	1	104.8 (47.5)	**CE5000K2ACEFS**

Primary: 240 x 480 with Jumpers
Secondary: 24

VA	Terminal Type	Wiring Diagram ①	Weight Lbs (kg)	Style Number
250	C	2	8.2 (3.7)	**CE0250K2BCEFS**
300	C	2	9.5 (4.3)	**CE0300K2BCEFS**
350	C	2	12.2 (5.5)	**CE0350K2BCEFS**
500	C	2	14.4 (6.5)	**CE0500K2BCEFS**
750	C	2	19.5 (8.9)	**CE0750K2BCEFS**
1000	C	2	26.2 (11.9)	**CE1000K2BCEFS**

Primary: 120 x 240 with Jumpers
Secondary: 24

VA	Terminal Type	Wiring Diagram ①	Weight Lbs (kg)	Style Number
250	C	3	8.3 (3.8)	**CE0250K1BCEFS**
300	C	3	9.3 (4.2)	**CE0300K1BCEFS**
350	C	3	12.0 (5.4)	**CE0350K1BCEFS**
500	C	3	14.4 (6.5)	**CE0500K1BCEFS**
750	C	3	19.5 (8.9)	**CE0750K1BCEFS**
1000	C	3	25.2 (11.4)	**CE1000K1BCEFS**

Primary: 200/220/440, 208/230/460, 240/480
Secondary: 23/110, 24/115, 25/120

VA	Terminal Type	Wiring Diagram ①	Weight Lbs (kg)	Style Number
250	B	7	12.5 (5.7)	**CE0250K5ECEFS**
300	B	7	14.0 (6.3)	**CE0300K5ECEFS**
350	B	7	15.3 (6.9)	**CE0350K5ECEFS**
500	B	7	20.8 (9.4)	**CE0500K5ECEFS**
750	C	7	29.8 (13.5)	**CE0750K5ECEFS**
1000	C	7	30.2 (13.7)	**CE1000K5ECEFS**

Primary: 220/380/440/550, 230/400/460/575, 240/416/480/600
Secondary: 23/110, 24/115, 25/120

VA	Terminal Type	Wiring Diagram ①	Weight Lbs (kg)	Style Number
250	B	14	14.3 (6.5)	**CE0250K2UCEFS**
300	B	14	15.8 (7.2)	**CE0300K2UCEFS**
350	B	14	16.5 (7.5)	**CE0350K2UCEFS**
500	B	14	20.5 (9.3)	**CE0500K2UCEFS**
750	C	14	28.8 (13.1)	**CE0750K2UCEFS**
1000	C	14	39.4 (17.9)	**CE1000K2UCEFS**

Primary: 208/230/400/460/575
Secondary: 24 ②/115/230

VA	Terminal Type	Wiring Diagram ①	Weight Lbs (kg)	Style Number
250	B	15	14.9 (6.8)	**CE0250K2VCEFS**
300	B	15	17.4 (7.9)	**CE0300K2VCEF**
350	B	15	17.8 (8.1)	**CE0350K2VCEFS**
500	B	15	26.6 (12.1)	**CE0500K2VCEFS**
750	B	15	32.5 (14.7)	**CE0750K2VCEFS**
1000	C	15	44.0 (20.0)	**CE1000K2VCEFS**
1500	C	15	45.4 (20.6)	**CE1500K2WCEFS**
2000	C	16	58.6 (26.6)	**CE2000K2WCEFS**
3000	C	16	92.9 (42.1)	**CE3000K2WCEFS**
5000	C	16	127.4 (57.8)	**CE5000K2WCEFS**

Primary: 240/416/480/600, 230/400/460/575, 220/380/440/550, 208/500
Secondary: 99/120/130, 95/115/125, 91/110/120, 85/100/110

VA	Terminal Type	Wiring Diagram ①	Weight Lbs (kg)	Style Number
250	A	8	11.4 (5.2)	**CE0250K6UCEFS**
300	A	8	13.6 (6.2)	**CE0300K6UCEFS**
350	A	8	14.2 (6.4)	**CE0350K6UCEFS**
500	A	8	17.4 (7.9)	**CE0500K6UCEFS**
750	A	8	27.5 (12.5)	**CE0750K6UCEFS**
1000	A	8	27.9 (12.6)	**CE1000K6UCEFS**
1500	A	8	43.1 (19.5)	**CE1500K6UCEFS**
2000	B	8	56.0 (25.4)	**CE2000K6UCEFS**
3000	B	8	76.2 (34.6)	**CE3000K6UCEFS**

Notes

① See **Page V7-T7-22** for wiring diagrams.

② 24 volt secondary only available through 1000 VA.

Accessories

Protection Index IP00

When terminal covers are installed on primary and secondary, and fuse block covers are used, the protection index is IP20.

Finger-Safe Terminal Covers (Optional)

- Fits CE Marked designs 50–750 VA
- Fits MTE designs 0.25–750 VA

Finger-Safe Terminal Covers

	Description	Catalog Number
FSK4	Four terminal transformers	FSK4
	Four terminal Series 2 transformers only	FSK4S2
FSK6	Six terminal transformers	FSK6

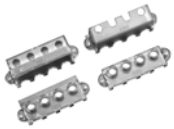

Finger-Safe Primary Fuse Block Covers

- Fits two-pole primary fuse blocks on MTE designs

Finger-Safe Primary Fuse Block Covers

	Description	Catalog Number
FSKFB	Primary fuse block covers	FSKFB

Secondary Fuse Clip

Secondary Fuse Clip

Description	Catalog Number
Fits 500 VA and smaller models	SFCS
Fits models greater than 500 VA	SFCL

Technical Data and Specifications

Overload Capability

Short-term overload is designed into transformers as required by ANSI. Basically, dry-type distribution transformers will deliver 200% nameplate load for one-half hour, 150% load for one hour and 125% load for four hours without being damaged, provided that a constant 50% load precedes and follows the overload. See ANSI C57.96-01.250 for additional limitations.

Continuous overload capacity is not deliberately designed into a transformer because the design objective is to be within the allowed winding temperature rise with nameplate loading.

Insulation System and Temperature Rise

Industry standards classify insulation systems and rise as shown below:

Insulation System Classification

Ambient	+ Winding Rise	+ Hot Spot	= Temp. Class
40°C	55°C	10°C	105°C
40°C	80°C	30°C	150°C
25°C	135°C	20°C	180°C
40°C	115°C	30°C	185°C
40°C	150°C	30°C	220°C

The design life of transformers having different insulation systems is the same—the lower-temperature systems are designed for the same life as the higher-temperature systems.

Series-Multiple Windings

Series-multiple windings consist of two similar coils in each winding that can be connected in series or parallel (multiple). Transformers with series-multiple windings are designated with an "x" or "/" between the voltage ratings, such as voltages of "120/240" or "240 x 480." If the series-multiple winding is designated by an "x," the winding can be connected only for a series or parallel. With the "/" designation, a mid-point also becomes available in addition to the series or parallel connection. As an example, a 120 x 240 winding can be connected for either 120 (parallel) or 240 (series), but a 120/240 winding can be connected for 120 (parallel), 240 (series) or 240 with a 120 mid-point.

For additional information, please refer to Volume 2, **CA08100003E**.

Wiring Diagrams

Diagram 1

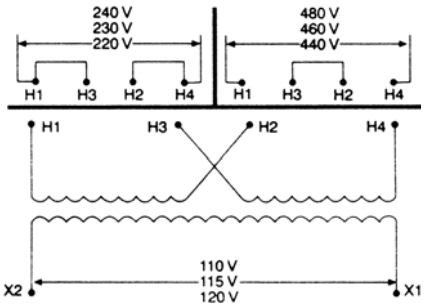

Diagram 2

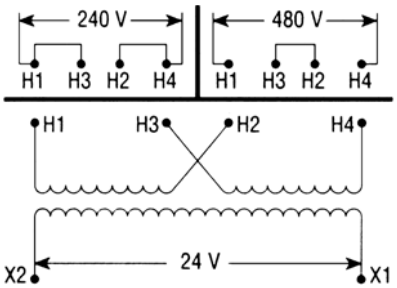

Diagram 3

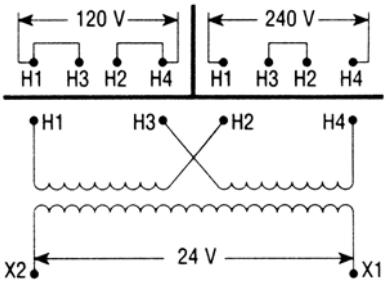

Diagram 4

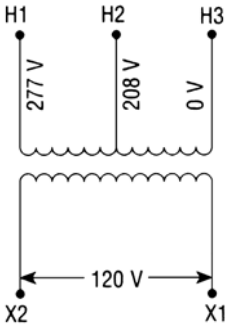

Diagram 5

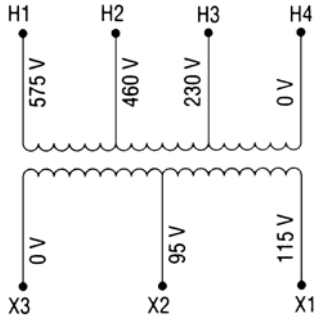

Diagram 6

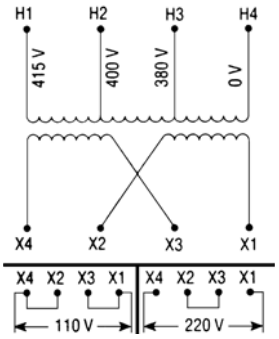

Diagram 7

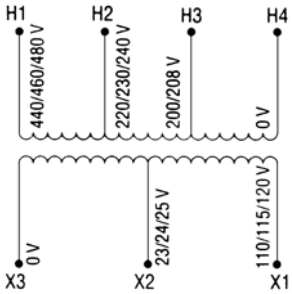

Diagram 8

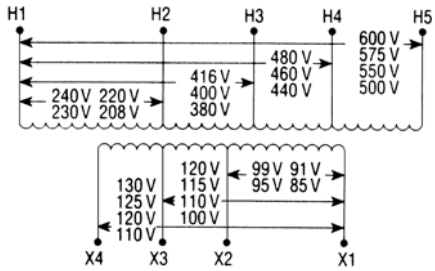

Diagram 9

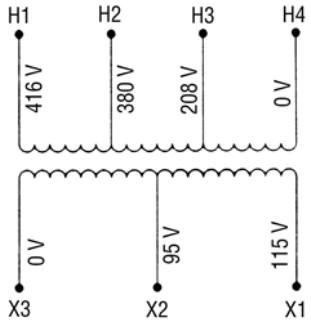

Diagram 10

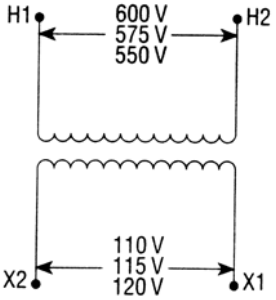

Diagram 11

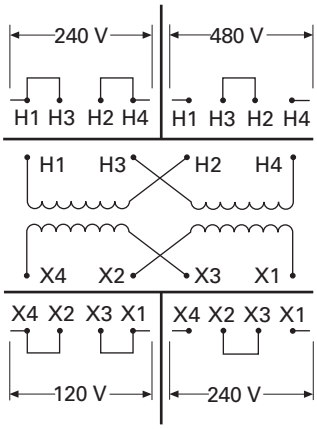

Diagram 12

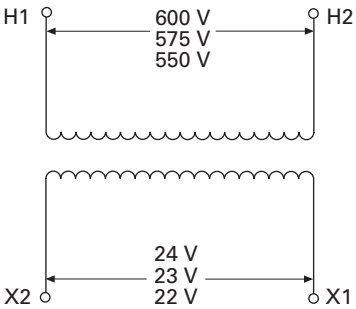

Diagram 13

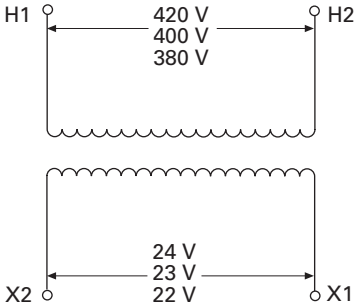

Diagram 14

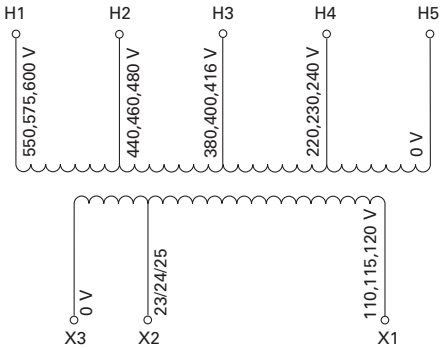

Diagram 15

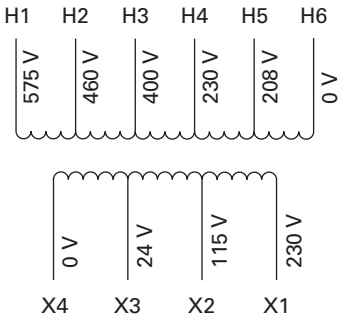

Diagram 16

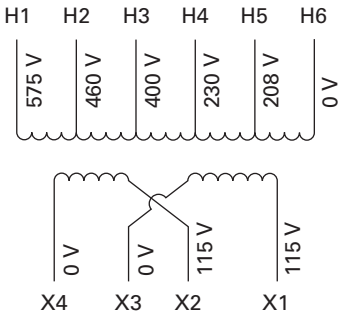

Acceptable Rating of Primary Overcurrent Protection for CE Marked Control Transformers ①

Fuses 13/32 x 1-1/2 Inches (10 x 38 mm) Timelag (IEC 269)

Sec. Voltage	50	75	100	150	200	250	300	350	500	750
115	2.0	2.0	4.0	4.0	6.0	6.0	8.0	10.0	12.0	20.0
120	2.0	2.0	4.0	4.0	6.0	6.0	8.0	10.0	12.0	20.0
200	1.0	2.0	2.0	4.0	4.0	4.0	4.0	6.0	8.0	12.0
208	1.0	2.0	2.0	4.0	4.0	4.0	4.0	6.0	8.0	12.0
220	1.0	1.0	2.0	4.0	4.0	4.0	4.0	6.0	6.0	10.0
230	1.0	1.0	2.0	4.0	4.0	4.0	4.0	6.0	6.0	10.0
240	1.0	1.0	2.0	4.0	4.0	4.0	4.0	4.0	6.0	10.0
277	0.5	1.0	1.0	2.0	4.0	4.0	4.0	4.0	6.0	8.0
380	0.5	1.0	1.0	2.0	2.0	4.0	4.0	4.0	6.0	6.0
400	0.5	0.5	1.0	2.0	2.0	4.0	4.0	4.0	4.0	6.0
415	0.5	0.5	1.0	1.0	2.0	4.0	4.0	4.0	4.0	6.0
440	0.5	0.5	1.0	1.0	2.0	2.0	4.0	4.0	4.0	6.0
460	0.5	0.5	1.0	1.0	2.0	2.0	4.0	4.0	4.0	6.0
480	0.5	0.5	0.5	1.0	2.0	2.0	4.0	4.0	4.0	6.0
550	0.5	0.5	0.5	1.0	1.0	2.0	2.0	4.0	4.0	4.0
575	0.5	0.5	0.5	1.0	1.0	2.0	2.0	4.0	4.0	4.0
600	0.5	0.5	0.5	1.0	2.0	2.0	2.0	4.0	4.0	4.0

Acceptable Maximum Rating of Secondary Overcurrent Protection ①

Miniature Fuses 5 x 20 mm Timelag (IEC 127-2/III)

Sec. Voltage	50	75	100	150	200	250	300	350	500	750
23	2.50	4.00	5.00	8.00	10.0	12.00	16.00	16.00	25.00	—
24	2.50	4.00	5.00	8.00	10.0	12.00	16.00	16.00	25.00	32.00
25	2.50	4.00	5.00	8.00	10.0	12.00	16.00	16.00	25.00	32.00
90	0.63	1.00	1.25	2.00	2.50	3.15	4.00	4.00	6.30	10.00
95	0.63	0.80	1.25	1.60	2.50	3.15	4.00	4.00	6.30	8.00
100	0.50	0.80	1.00	1.60	2.00	2.50	3.15	4.00	5.00	8.00
110	0.50	0.80	1.00	1.60	2.00	2.50	3.15	4.00	5.00	8.00
115	0.50	0.80	1.00	1.60	2.00	2.50	3.15	3.15	5.00	8.00
120	0.50	0.63	1.00	1.25	2.00	2.50	2.50	3.15	5.00	6.30
220	0.25	0.40	0.50	0.80	1.00	1.25	1.60	1.60	2.50	4.00
230	0.25	0.40	0.50	0.80	1.00	1.25	1.60	1.60	2.50	4.00
240	0.25	0.32	0.50	0.63	1.00	1.25	1.25	1.60	2.50	3.15

Regulation Data Chart

Transformer VA Rating	Inrush VA at 20% Power Factor NEMA/IEC 95% Sec. Voltage	NEMA/IEC 90% Sec. Voltage	NEMA/IEC 85% Sec. Voltage
25 ②	100/—	130/—	150/—
50 ②	170/190	200/220	240/270
75 ②	310/350	410/460	450/600
100 ②	370/410	540/600	730/810
150 ③	780/850	930/1030	1150/1270
200 ③	810/900	1150/1270	1450/1600
250 ③	1400/1540	1900/2090	2300/2530
300 ③	1900/2090	2700/2970	3850/4240
350 ③	3100/3410	3650/4020	4800/5280
500 ③	4000/4400	5300/5830	7000/7700
750 ③	8300/9130	11,000/12,100	14,000/15,400
1000 ③	15,000/16,500	21,000/23,000	27,000/29,500
1000 ④	9000/9900	13,000/14,300	18,500/20,300
1500 ④	10,500/11,500	15,000/16,500	20,500/22,500
2000 ④	17,000/18,900	25,500/27,300	34,000/36,400
3000 ④	24,000/25,700	36,000/38,500	47,500/50,200
5000 ④	55,000/58,800	92,500/98,900	115,000/122,000

Notes

① For values over 6.3A, use 10 x 38 mm timelag (IEC - 269-3-1). T_a = 40°C control type.
② For units with Class 105°C insulation system.
③ For units with Class 130°C insulation system.
④ For units with Class 180°C insulation system.

To comply with NEMA standards that require all magnetic devices to operate successfully at 85% of rated voltage, the 90% secondary column is most often used in selecting a transformer. No comparable requirement is available for IEC.

Type AP Transformer

Contents

Description	*Page*
Type MTE	**V7-T7-4**
Type MTK	**V7-T7-13**
CE Marked	**V7-T7-18**
Type AP	
Catalog Number Selection	**V7-T7-26**
Product Selection	**V7-T7-26**
Technical Data and Specifications	**V7-T7-26**

Type AP

Product Description

- Encapsulated designs

Application Description

Transformers provide stepped-down voltages to machine tool control devices, enabling control circuits to be isolated from all power and lighting circuits. This allows the use of grounded or ungrounded circuits that are independent of the power or lighting grounds; thus, greater safety is afforded the operator. The control transformer line is particularly adaptable on applications where compact construction is demanded.

Features, Benefits and Functions

- Resin encapsulated
- 60 Hz operation
- 180°C insulation system
- 115°C rise standard; 80°C rise optional
- Convenient screw-type terminal board
- Bottom or side/wall-mounting designs
- Performance meets/exceeds requirements of ANSI/NEMA ST-1
- Regulation exceeds ANSI/NEMA requirements for all ratings

Standards and Certifications

- UL recognized

Industry Standards

All Eaton dry-type distribution and control transformers are built and tested in accordance with applicable NEMA, ANSI and IEEE Standards.

Catalog Number Selection

Please refer to **Page V7-T7-3**.

Product Selection

Additional Product Selection information is available in Volume 2, **CA08100003E**.

240/480 Volts to 120/240 Volts, 60 Hz

kVA	Mounting	Frame	Wiring Diagram ①	Weight Lbs (kg)	Style Number
3	Bottom	FR133	5	65 (29.5)	**C0003P7GB**
5	Bottom	FR99	5	104 (47.2)	**C0005P7GB**
7.5	Bottom	FR100	5	129 (58.6)	**C0007P7GB**
10	Bottom	FR101	5	148 (67.2)	**C0010P7GB**
15	Bottom	FR134	5	197 (89.4)	**C0015P7GB**
3	Side/Wall	FR292	5	65 (29.5)	**C0003P7GS**
5	Side/Wall	FR256	5	104 (47.2)	**C0005P7GS**
7.5	Side/Wall	FR257	5	129 (58.6)	**C0007P7GS**
10	Side/Wall	FR258	5	148 (67.2)	**C0010P7GS**
15	Side/Wall	FR259	5	197 (89.4)	**C0015P7GS**

Technical Data and Specifications

Overload Capability

Short-term overload is designed into transformers as required by ANSI. Dry-type distribution transformers will deliver 200% nameplate load for one-half hour, 150% load for one hour and 125% load for four hours without being damaged, provided that a constant 50% load precedes and follows the overload. See ANSI C57.96-01.250 for additional limitations.

Continuous overload capacity is not deliberately designed into a transformer because the design objective is to be within the allowed winding temperature rise with nameplate loading.

Insulation System and Temperature Rise

Industry standards classify insulation systems and rise as shown below:

Insulation System Classification

Ambient	+ Winding Rise	+ Hot Spot	= Temp. Class
40°C	55°C	10°C	105°C
40°C	80°C	30°C	150°C
25°C	135°C	20°C	180°C
40°C	115°C	30°C	185°C
40°C	150°C	30°C	220°C

The design life of transformers having different insulation systems is the same—the lower-temperature systems are designed for the same life as the higher-temperature systems.

Sound Levels

All Eaton 600 volt class general-purpose dry-type distribution transformers are designed to meet NEMA ST-20 levels.

Winding Terminations

Eaton recommends external cables be rated 90°C (sized at 75°C ampacity) for encapsulated designs.

Series-Multiple Windings

Series-multiple windings consist of two similar coils in each winding that can be connected in series or parallel (multiple). Transformers with series-multiple windings are designated with an "x" or "/" between the voltage ratings, such as voltages of "120/240" or "240 x 480." If the series-multiple winding is designated by an "x," the winding can be connected only for a series or parallel.

With the "/" designation, a mid-point also becomes available in addition to the series or parallel connection. As an example, a 120 x 240 winding can be connected for either 120 (parallel) or 240 (series), but a 120/240 winding can be connected for 120 (parallel), 240 (series) or 240 with a 120 mid-point.

For additional information, please refer to Volume 2, **CA08100003E**.

Note: For additional information, refer to Eaton's Industrial Control Transformer Binder B1228A. For other ratings or styles not shown, or for special enclosure types (including stainless steel), refer to Eaton.

Note

① See **Page V7-T7-22** for wiring diagrams.

Terminal Blocks, Fuse Blocks and Fuse Holders

Screw Connection

Spring Cage

Insulation Displacement Connection

8.1 IEC—*XB* Series

IEC—***XB*** Series Overview **V7-T8-2**
Screw Connection Terminal Blocks **V7-T8-4**
Spring Cage Terminal Blocks **V7-T8-31**
Pluggable Spring Cage Connection Terminal Blocks. **V7-T8-58**
IDC Terminal Blocks **V7-T8-67**
Miniature Circuit Breakers **V7-T8-82**
XB Series Accessories **V7-T8-90**

8.2 NEMA

NEMA Overview **V7-T8-104**
C381 Series Terminal Blocks, Rail Mounted **V7-T8-105**
TB Series Terminal Blocks, Modular **V7-T8-109**

8.3 Power Distribution

Power Distribution Overview **V7-T8-114**
CHDB Series—Power Distribution Blocks **V7-T8-115**
CH160 Series—Power Terminal Blocks **V7-T8-121**
Power Terminal Block Accessories **V7-T8-124**

8.4 Fuse Blocks and Fuse Holders

Fuse Blocks and Fuse Holders Overview **V7-T8-126**
C383 Series Disconnect Fuse Holders **V7-T8-127**
C350 Series Fuse Blocks and W Series Fuse Holders **V7-T8-129**

Learn Online

IEC—*XB* Series

Contents

Description	*Page*
IEC—***XB*** Series	
Screw Connection Terminal Blocks	**V7-T8-4**
Spring Cage Terminal Blocks	**V7-T8-31**
Pluggable Spring Cage Connection Terminal Blocks	**V7-T8-58**
IDC Terminal Blocks	**V7-T8-67**
Miniature Circuit Breakers	**V7-T8-82**
XB Series Accessories	**V7-T8-90**

IEC—*XB* Series Overview

Product Description

The ***XB*** Series from Eaton offers a complete terminal block system with a universal range of accessories. Marking, bridging and testing accessories are standardized across the different termination technologies—reducing inventory and logistics costs. The modular terminal block design allows for use of the different terminal block types together or individually, providing the highest degree of flexibility.

Application Description

The metal portion of the ***XB*** Series terminal blocks are made from high-grade, strain-crack and corrosion-proof copper alloys. They won't experience any electrolytic corrosion or rusting, even when moisture is present. The metal surfaces are protected with a lead-free, galvanic nickel or tin plating. The good electrical conductivity permits only a low temperature rise. The Polyamide 6.6 housings allow for operating temperatures up to 257°F (125°C) and are certified for inflammability Class V0 in accordance with UL 94.

Features

Global acceptance—The ***XB*** Series terminal blocks are designed to worldwide standards and meet the latest international requirements.

Flexible Plug-in bridge system—All three technologies (screw, spring and IDC) use the same bridge system, allowing for individual potential distribution and quickly bridged connections among the same terminal block type or across different types. The ***XB*** Series terminal blocks have two bridge shafts arranged in one line, making flexible chain bridging and skip bridging between non-adjacent terminal blocks possible. Plug-in bridges are available from 2 to 50 positions. Reducing bridges are also available to connect a larger terminal block to a smaller one.

Large surface area for marking—All ***XB*** Series terminal blocks have generously sized surface areas for labeling. This allows for clearly labeled wiring that results in reduced startup time and simplifies activities such as testing and maintenance. There are provisions for marking individual terminal blocks and end stops, strips of terminal blocks, and large groups of terminal blocks.

Standardized testing system—All test plugs make contact in one of the easily accessible bridge shafts. A 2.3 mm diameter test plug is available for individual measuring wires. Modular test plugs are also available for more advanced testing.

Standards and Certifications

- UL® and cUL® recognized—File No. E67464
- CE approved
- LVD ①
  - EN 60947-7-1
  - EN 60947-7-2
  - EN 60998-2-3
  - EN 60352-4/A1

Note

① Not all standards apply to all terminal blocks. Contact Eaton for details.

Technical Data and Specifications

IEC—*XB* Series

Description	Specification
Insulation material	Polyamide 6.6
Dielectric strength	600 kV/cm
Creep resistance	600 CTI
Internal insulation resistance	10^{12} ohms cm
Surface resistance	10^{10} ohms
Flammability rating	UL 94 V0
Continuous operating temperature	–40 to 257°F (–40 to 125°C)

Screw Connection

Contents

Description	*Page*
Screw Connection Terminal Blocks	
Single Level—Through-Feed	**V7-T8-5**
Single Level—Ground Blocks	**V7-T8-10**
Multi-Conductor Terminal Blocks	**V7-T8-12**
Multi-Conductor Ground Blocks	**V7-T8-14**
Double Level	**V7-T8-16**
Triple Level Sensor/Actuator	**V7-T8-18**
Fuse Terminal Blocks	**V7-T8-21**
Disconnect and Component Terminal Blocks	**V7-T8-24**
High Current Blocks	**V7-T8-27**
Mini Screw Connection	**V7-T8-29**

Drawings Online

Screw Connection Terminal Blocks Overview

Product Description

The XBUT Series uses a screw connection system that is accepted worldwide and is suitable in most applications. The maintenance-free connection provides the reliability you expect from Eaton.

Application Description

Designed for applications with high demands, the XBUT Series screw terminal block has a maintenance-free wire connection. re-tightening of the terminal screws is not necessary to ensure proper operation. The screw locking technique prevents the screws from backing out. Copper wires can be clamped without pre-treatment or ferrules can be used for splicing protection. Multiple conductors can be connected in the same clamping mechanism, saving space.

Features

- Maintenance-free connections
- Global acceptance
- Multi-conductor connections
- Flexible Plug-in bridge system
- Large surface area for marking
- Standardized testing system
- Metal parts made of tin-plated copper alloy

Standards and Certifications

- UL and cUL recognized—File No. E67464
- CE approved
- LVD ①:
  - EN 60947-7-1
  - EN 60947-7-2
  - EN 60998-2-3
  - EN 60352-4/A1

Note

① Not all standards apply to all terminal blocks. Contact Eaton for details.

Single Level—Through-Feed

Contents

Description	*Page*
Single Level—Through-Feed	
Product Selection	**V7-T8-6**
Accessories	**V7-T8-7**
Technical Data and Specifications	**V7-T8-9**
Dimensions	**V7-T8-9**
Single Level—Ground Blocks	**V7-T8-10**
Multi-Conductor Terminal Blocks	**V7-T8-12**
Multi-Conductor Ground Blocks	**V7-T8-14**
Double Level	**V7-T8-16**
Triple Level Sensor/Actuator	**V7-T8-18**
Fuse Terminal Blocks	**V7-T8-21**
Disconnect and Component Terminal Blocks	**V7-T8-24**
High Current Blocks	**V7-T8-27**
Mini Screw Connection	**V7-T8-29**

Single Level—Through-Feed

Product Description

The XBUT terminal blocks feature a compact design and maintenance-free screw connection. There is a double bridge shaft providing maximum flexibility.

The double bridge shaft can accommodate individual chain bridging and step-down bridging from other terminal blocks. There are numerous options for accessories, including those for testing and marking. Terminal blocks are available for wire cross-sections ranging from 12 AWG (2.5 mm^2) to 2/0 AWG (150 mm^2).

Product Selection

XBUT4

Screw Connection Single Level—Through-Feed

Terminal Width	Maximum Wire Size	IEC 60 947-7-1 in V/A/AWG	EN 50 019 in V/A/AWG	UL-cUL Ratings in V/A/AWG	Color	Standard Pack	Catalog Number
5.2 mm	12 AWG/2.5 mm^2	800/32/26–12	750/22/28/26–12	600/20/26–12	Gray	50	**XBUT25**
					Blue	50	**XBUT25BU**
6.2 mm	10 AWG/4 mm^2	800/41/26–10	750/30/38/26–10	600/30/26–10	Gray	50	**XBUT4**
					Blue	50	**XBUT4BU**
					Orange	50	**XBUT4OR**
					Yellow	50	**XBUT4YE**
					Red	50	**XBUT4RD**
					White	50	**XBUT4WH**
					Black	50	**XBUT4BK**
					Green	50	**XBUT4GN**
8.2 mm	8 AWG/6 mm^2	800/57/24–8	750/40/50/24–8	600/50/24–8	Gray	50	**XBUT6**
					Blue	50	**XBUT6BU**
10.2 mm	6 AWG/10 mm^2	1000/76/20–6	750/54/69/20–6	600/65/20–6	Gray	50	**XBUT10**
					Blue	50	**XBUT10BU**
					Orange	50	**XBUT10OR**
					Yellow	50	**XBUT10YE**
					Red	50	**XBUT10RD**
12 mm	4 AWG/16 mm^2	1000/101/17–4	—	600/85/16–4	Gray	50	**XBUT16**
					Blue	50	**XBUT16BU**
16 mm	0 AWG/35 mm^2	1000/150/15–0	—	600/150/14–1/0	Gray	50	**XBUT35**
					Blue	50	**XBUT35BU**

Accessories

Screw Connection Single Level—Through-Feed

Description	Color	Number of Positions	Standard Pack	XBUT25 Catalog Number	XBUT4 Catalog Number	XBUT6 Catalog Number	XBUT10 Catalog Number	XBUT16 Catalog Number	XBUT35 Catalog Number
End cover	Gray	—	50	**XBACUT10**	**XBACUT10**	**XBACUT10**	**XBACUT10**	**XBACUT16**	①
Partition plate	Gray	—	50	**XBATUT10**	**XBATUT10**	**XBATUT10**	**XBATUT10**	—	—
Plug-in bridge— for cross connections in the bridge shaft	Red	2	10	**XBAFBS25**	**XBAFBS26**	**XBAFBS28**	**XBAFBS210**	**XBAFBS212**	**XBAFBS216**
		3	50	**XBAFBS35**	**XBAFBS36**	—	—	—	—
		5	50	**XBAFBS55**	**XBAFBS56**	—	—	—	—
		10	10	**XBAFBS105**	**XBAFBS106**	—	—	—	—
		50	10	**XBAFBS505**	**XBAFBS506**	—	—	—	—
Test adapter	—	—	10	**XBATSPAI4**	**XBATSPAI4**	**XBATSPAI4**	—	—	—
2.3 mm diameter test plug	—	—	—	**XBATSMPS-_** ①	**XBATSMPS-_** ①	—	—	—	—
Modular test plug	—	—	10	**XBATSPS5**	**XBATSPS6**	**XBATSPS8**	—	—	—
Blank marker strip (strip of 10)	White	—	10	**XBMZB5** ②	**XBMZB6** ②	**XBMZB8** ②	**XBMZB10** ②	**XBMZB12** ②	**XBMZB15** ②

Notes

① Enclosed block, no end cover needed.

② For information on Printed Marking Tag Options, see **Page V7-T8-98**.

For additional accessories, see **Page V7-T8-90**.

XBUT with Reducing Bridge

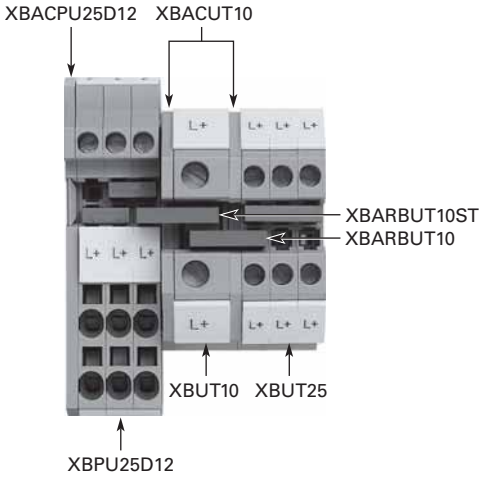

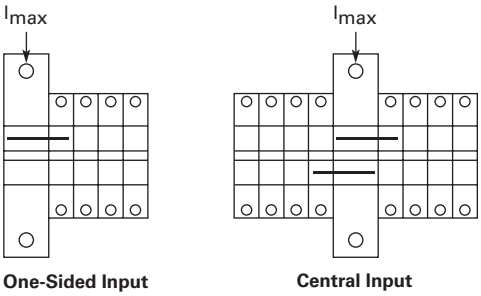

Step-Down Bridge with Standard Feed-Through Terminal Blocks

Input Terminal Blocks	Cross-Section	Pick-Off Terminal Blocks	Cross-Section AWG (mm²)	One-Sided Input I_{max}	Central Input I_{max}	Bridge Catalog Number
XBUT10	6 AWG (10 mm²)	XBUT25	12 (2.5)	40	65	**XBARBUT10**
		XBUT4	10 (4)	45	65	**XBARBUT10**
		XBPT25	12 (2.5)	40	65	**XBARBUT10ST**
		XBPT4	10 (4)	45	65	**XBARBUT10ST**
		XBQT15	14 (1.5)	35	65	**XBARBUT10ST**
		XBQT25	12 (2.5)	40	65	**XBARBUT10ST**
XBUT16	4 AWG (16 mm²)	XBUT25	12 (2.5)	40	80	**XBARBUT16**
		XBUT4	10 (4)	45	90	**XBARBUT16**
		XBPT25	12 (2.5)	40	80	**XBARBUT16ST**
		XBPT4	10 (4)	45	90	**XBARBUT16ST**
		XBQT15	14 (1.5)	35	70	**XBARBUT16ST**
		XBQT25	12 (2.5)	40	80	**XBARBUT16ST**

Technical Data and Specifications

Screw Connection Single Level—Through-Feed

Description	XBUT25	XBUT4	XBUT6	XBUT10	XBUT16	XBUT35
Technical Data in Accordance with IEC						
Maximum load current in A/cross-section in mm^2	32/4	41/6	57/10	76/16	101/25	150/50
Rated surge voltage in kV/contamination class	8/3	8/3	8/3	8/3	8/3	8/3
Surge voltage category/insulating material group	III/II	III/I	III/I	III/I	III/I	III/I
Connection Capacity						
Stranded with ferrule/with ferrule and plastic sleeve in mm^2	0.25–2.5/0.25–2.5	0.25–4/0.25–4	0.25–6/0.25–6	0.5–10/0.5–10	1.0–16/1.0–16	1.5–35/1.5–35
Multi-Conductor Connection (same cross-section)						
Solid/stranded in mm^2	0.14–1.5/0.14–1.5	0.14–1.5/0.14–1.5	0.2–2.5/0.2–2.5	0.5–4/0.5–4	1.0–6/1.0–4	1.5–16/1.5–10
Stranded with ferrules without plastic sleeve in mm^2	0.25–1.5	0.25–1.5	0.25–1.5	0.5–2.5	1.0–4	1.5–10
Stranded with twin ferrule with plastic sleeve in mm^2	0.5–1.5	0.5–2.5	0.5–4	0.5–6	0.75–10	1.5–10
Stripping length in inches (mm)	0.35 (9)	0.35 (9)	0.39 (10)	0.39 (10)	0.39 (10)	0.63 (16)
Thread	M3	M3	M4	M4	M5	M6
Torque in in-lb (Nm)	5.3–7.1 (0.6–0.8)	5.3–7.1 (0.6–0.8)	13.3–15.9 (1.5–1.8)	13.3–15.9 (1.5–1.8)	22.1–26.6 (2.5–3)	28.3–32.7 (3.2–3.7)

Dimensions

Approximate Dimensions in Inches (mm)

Screw Connection Single Level—Through-Feed

Catalog Number	Width	Length	Cover Width	Height for— 35 x 7.5 in	35 x 15 in
XBUT25	0.20 (5.2)	1.85 (46.9)	0.09 (2.2)	1.87 (47.5)	2.17 (55.0)
XBUT4	0.24 (6.2)	1.85 (46.9)	0.09 (2.2)	1.87 (47.5)	2.17 (55.0)
XBUT6	0.32 (8.2)	1.85 (46.9)	0.09 (2.2)	1.87 (47.5)	2.17 (55.0)
XBUT10	0.40 (10.2)	1.85 (46.9)	0.09 (2.2)	1.87 (47.5)	2.17 (55.0)
XBUT16	0.47 (12.0)	2.08 (52.8)	0.09 (2.2)	2.16 (54.8)	2.45 (62.3)
XBUT35	0.63 (16.0)	2.37 (60.2)	—	2.59 (65.7)	2.88 (73.2)

Notes

① XBUT35 has an enclosed design. The use of an end cover is not required.

② For information on Printed Marking Tag Options, see **Page V7-T8-98**.

Single Level—Ground Blocks

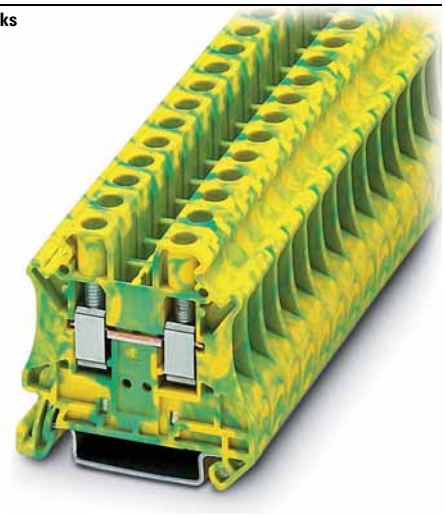

Contents

Description	*Page*
Single Level—Through-Feed	**V7-T8-5**
Single Level—Ground Blocks	
Accessories	**V7-T8-11**
Technical Data and Specifications	**V7-T8-11**
Dimensions	**V7-T8-11**
Multi-Conductor Terminal Blocks	**V7-T8-12**
Multi-Conductor Ground Blocks	**V7-T8-14**
Double Level	**V7-T8-16**
Triple Level Sensor/Actuator	**V7-T8-18**
Fuse Terminal Blocks	**V7-T8-21**
Disconnect and Component Terminal Blocks	**V7-T8-24**
High Current Blocks	**V7-T8-27**
Mini Screw Connection	**V7-T8-29**

Single Level—Ground Blocks

Product Description

The ground terminal blocks have the same shape and pitch as the standard terminal block, in a green-yellow housing. They easily snap onto the DIN rail to make a reliable mechanical and electrical contact that meets all requirements of IEC 60-947-7-2.

Product Selection

XBUT6PE

Screw Connection Single Level—Ground Blocks

Terminal Width	Maximum Wire Size	IEC 60 947-7-1 in V/A/AWG	EN 50 019 in V/A/AWG	UL-cUL Ratings in V/A/AWG	Color	Standard Pack	Catalog Number
5.2 mm	12 AWG/2.5 mm^2	—/—/26–12	—/—/26–12	—/—/26–12	Green/Yellow	50	**XBUT25PE**
6.2 mm	10 AWG/4 mm^2	—/—/26–10	—/—/26–10	—/—/26–10	Green/Yellow	50	**XBUT4PE**
8.2 mm	8 AWG/6 mm^2	—/—/24–8	—/—/24–8	—/—/24–8	Green/Yellow	50	**XBUT6PE**
10.2 mm	6 AWG/10 mm^2	—/76/20–6	—/54/69/20–6	—/—/20–6	Green/Yellow	50	**XBUT10PE**
12 mm	4 AWG/16 mm^2	—/101/15–4	—	—/—/16–4	Green/Yellow	50	**XBUT16PE**
16 mm	2 AWG/35 mm^2	—/125/15–2	—	—/—/14–1/0	Green/Yellow	50	**XBUT35PE**

Accessories

Screw Connection Single Level—Ground Blocks

Description	Color	Number of Positions	Standard Pack	XBUT25PE Catalog Number	XBUT4PE Catalog Number	XBUT6PE Catalog Number	XBUT10PE Catalog umber	XBUT16PE Catalog Number	XBUT35PE Catalog Number
End cover	Gray	—	50	**XBACUT10**	**XBACUT10**	**XBACUT10**	**XBACUT10**	**XBACUT16**	③
Partition plate	—	—	50	**XBATUT10**	**XBATUT10**	**XBATUT10**	**XBATUT10**	—	—
Plug-in bridge— for cross connections in the bridge shaft	Red	2	10	**XBAFBS25**	**XBAFBS26**	**XBAFBS28**	**XBAFBS210**	**XBAFBS212**	**XBAFBS212**
		3	50	**XBAFBS35**	**XBAFBS36**	—	—	—	—
		5	50	**XBAFBS55**	**XBAFBS56**	—	—	—	—
		10	10	**XBAFBS105**	**XBAFBS106**	—	—	—	—
		50	10	**XBAFBS505**	**XBAFBS506**	—	—	—	—
Test adapter	—	—	10	**XBATSPAI4**	**XBATSPAI4**	**XBATSPAI4**	—	—	—
2.3 mm diameter test plug	—	—	—	**XBATSMPS-_** ①	**XBATSMPS-_** ①	—	—	—	—
Modular test plug	—	—	10	**XBATSPS5**	**XBATSPS6**	**XBATSPS8**	—	—	—
Blank marker strip (strip of 10)	White	—	10	**XBMZB5** ②	**XBMZB6** ②	**XBMZB8** ②	**XBMZB10** ②	**XBMZB12** ②	**XBMZB15** ②

Technical Data and Specifications

Screw Connection Single Level—Ground Blocks

Description	XBUT25PE	XBUT4PE	XBUT6PE	XBUT10PE	XBUT16PE	XBUT35PE
Technical Data in Accordance with IEC						
Maximum load current in A/cross-section in mm^2	—	—	—	76/16	101/25	125/50
Rated surge voltage in kV/contamination class	8/3	8/3	8/3	8/3	8/3	8/3
Surge voltage category/insulating material group	III/II	III/I	III/I	III/I	III/I	III/I
Connection Capacity						
Stranded with ferrule/with ferrule and plastic sleeve in mm^2	0.25–2.5/0.25–2.5	0.25–4/0.25–4	0.25–6/0.25–6	0.5–10/0.5–10	1.0–16/1.0–16	1.5–35/1.5–35
Multi-Conductor Connection (same cross-section)						
Solid/stranded in mm^2	0.14–1.5/0.14–1.5	0.14–1.5/0.14–1.5	0.2–2.5/0.2–2.5	0.5–4/0.5–4	1.0–6/1.0–4	1.5–16/1.5–10
Stranded with ferrules without plastic sleeve in mm^2	0.25–1.5	0.25–1.5	0.25–1.5	0.5–2.5	1.0–4	1.5–10
Stranded with twin ferrule with plastic sleeve in mm^2	0.5–1.5	0.5–2.5	0.5–4	0.5–6	0.75–10	1.5–10
Stripping length in inches (mm)	0.35 (9)	0.35 (9)	0.39 (10)	0.39 (10)	0.39 (10)	0.63 (16)
Thread	M3	M3	M4	M4	M5	M6
Torque in in-lb (Nm)	5.3–7.1 (0.6–0.8)	5.3–7.1 (0.6–0.8)	13.3–15.9 (1.5–1.8)	13.3–15.9 (1.5–1.8)	22.1–26.6 (2.5–3)	28.3–32.7 (3.2–3.7)

Dimensions

Approximate Dimensions in Inches (mm)

Screw Connection Single Level—Ground Blocks

Catalog Number	Width	Length	Cover Width	Height for— 35 x 7.5 in	35 x 15 in
XBUT25PE	0.20 (5.2)	1.85 (46.9)	0.09 (2.2)	1.87 (47.5)	2.17 (55.0)
XBUT4PE	0.24 (6.2)	1.85 (46.9)	0.09 (2.2)	1.87 (47.5)	2.17 (55.0)
XBUT6PE	0.32 (8.2)	1.85 (46.9)	0.09 (2.2)	1.87 (47.5)	2.17 (55.0)
XBUT10PE	0.40 (10.2)	1.85 (46.9)	0.09 (2.2)	1.87 (47.5)	2.17 (55.0)
XBUT16PE	0.47 (12.0)	2.08 (52.8)	0.09 (2.2)	2.16 (54.8)	2.45 (62.3)
XBUT35PE	0.63 (16.0)	2.37 (60.2)	—	2.59 (65.7)	2.88 (73.2)

Notes

① For ordering information, see **Page V7-T8-103**.
② For information on Printed Marking Tag Options, see **Page V7-T8-98**.
③ XBUT35PE has an enclosed design. The use of an end cover is not required.

For additional accessories, see **Page V7-T8-90**.

Multi-Conductor Terminal Blocks

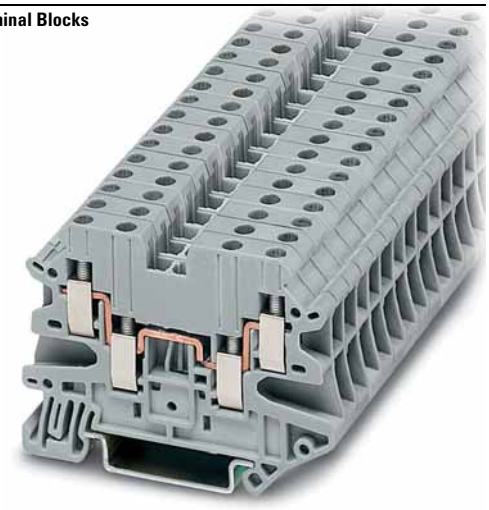

Contents

Description	*Page*
Single Level—Through-Feed	**V7-T8-5**
Single Level—Ground Blocks	**V7-T8-10**
Multi-Conductor Terminal Blocks	
Accessories	**V7-T8-13**
Technical Data and Specifications	**V7-T8-13**
Dimensions	**V7-T8-13**
Multi-Conductor Ground Blocks	**V7-T8-14**
Double Level	**V7-T8-16**
Triple Level Sensor/Actuator	**V7-T8-18**
Fuse Terminal Blocks	**V7-T8-21**
Disconnect and Component Terminal Blocks	**V7-T8-24**
High Current Blocks	**V7-T8-27**
Mini Screw Connection	**V7-T8-29**

Multi-Conductor Terminal Blocks

Product Description

The multi-conductor terminal blocks offer a space-saving alternative to standard feed-through terminal blocks allowing for high density wiring. Often, three connections have to be led to one terminal block. The XBUT…D12 terminal block accomplishes this without any additional terminal blocks or bridging required.

The XBUT…D22 terminal blocks allow four wires to be connected to one potential—and can therefore be used as compact power distributors.

Product Selection

XBUT25D12

Screw Connection Multi-Conductor Terminal Blocks, Three-Wire

Terminal Width	Maximum Wire Size	IEC 60 947-7-1 in V/A/AWG	UL-cUL Ratings in V/A/AWG	Color	Standard Pack	Catalog Number
5.2 mm	12 AWG/2.5 mm^2	500/28/26–12	150/20/26–12	Gray	50	**XBUT25D12**
				Blue	50	**XBUT25D12BU**
6.2 mm	10 AWG/4 mm^2	500/39/26–10	150/30/26–10	Gray	50	**XBUT4D12**
				Blue	50	**XBUT4D12BU**

XBUT4D22

Screw Connection Multi-Conductor Terminal Blocks, Four-Wire

Terminal Width	Maximum Wire Size	IEC 60 947-7-1 in V/A/AWG	UL-cUL Ratings in V/A/AWG	Color	Standard Pack	Catalog Number
5.2 mm	12 AWG/2.5 mm^2	500/28/26–12	150/20/26–12	Gray	50	**XBUT25D22**
				Blue	50	**XBUT25D22BU**
6.2 mm	10 AWG/4 mm^2	500/39/26–10	150/30/26–10	Gray	50	**XBUT4D22**
				Blue	50	**XBUT4D22BU**

Accessories

Screw Connection Multi-Conductor Terminal Blocks

Description	Color	Number of Positions	Standard Pack	XBUT25D12 Catalog Number	XBUT4D12 Catalog Number	XBUT25D22 Catalog Number	XBUT4D22 Catalog Number
End cover	Gray	—	50	**XBACUT4D12**	**XBACUT4D12**	**XBACUT4D22**	**XBACUT4D22**
End cover segment	Gray	—	50	**XBASUT4**	**XBASUT4**	**XBASUT4**	**XBASUT4**
Partition plate	—	—	50	**XBATUTD12**	**XBATUTD12**	**XBATUTD22**	**XBATUTD22**
Plug-in bridge—for cross connections in the bridge shaft	Red	2	10	**XBAFBS25**	**XBAFBS26**	**XBAFBS25**	**XBAFBS26**
		3	50	**XBAFBS35**	**XBAFBS36**	**XBAFBS35**	**XBAFBS36**
		5	50	**XBAFBS55**	**XBAFBS56**	**XBAFBS55**	**XBAFBS56**
		10	10	**XBAFBS105**	**XBAFBS106**	**XBAFBS105**	**XBAFBS106**
		50	10	**XBAFBS505**	**XBAFBS506**	**XBAFBS505**	**XBAFBS506**
Test adapter	—	—	10	**XBATSPAI4**	**XBATSPAI4**	**XBATSPAI4**	**XBATSPAI4**
2.3 mm diameter test plug	—	—	—	**XBATSMPS-_** ①	**XBATSMPS-_** ①	**XBATSMPS-_** ①	**XBATSMPS-_** ①
Modular test plug	—	—	10	**XBATSPS5**	**XBATSPS6**	**XBATSPS5**	**XBATSPS6**
Blank marker strip (strip of 10)	White	—	10	**XBMZB5** ②	**XBMZB6** ②	**XBMZB5** ②	**XBMZB6** ②

Technical Data and Specifications

Screw Connection Multi-Conductor Terminal Blocks

Description	XBUT25D12	XBUT4D12	XBUT25D22	XBUT4D22
Technical Data in Accordance with IEC				
Maximum load current in A/cross-section in mm^2	28/4	39/6	28/4	39/6
Rated surge voltage in kV/contamination class	6/3	6/3	6/3	6/3
Surge voltage category/insulating material group	III/I	III/I	III/I	III/I
Connection Capacity				
Stranded with ferrule/with ferrule and plastic sleeve in mm^2	0.25–2.5/0.25–2.5	0.25–4/0.25–4	0.25–2.5/0.25–2.5	0.25–4/0.25–4
Multi-Conductor Connection (same cross-section)				
Solid/stranded in mm^2	0.14–1.0/0.14–1.0	0.14–1.0/0.14–1.5	0.14–1.0/0.14–1.0	0.14–1/0.14–1.5
Stranded with ferrules without plastic sleeve in mm^2	0.25–1.0	0.25–1.5	0.25–1.0	0.25–1.5
Stranded with twin ferrule with plastic sleeve in mm^2	0.5–1.0	0.5–1.0	0.5–1.0	0.5–1.0
Stripping length in inches (mm)	0.31 (8)	0.31 (8)	0.31 (8)	0.31 (8)
Thread	M3	M3	M3	M3
Torque in in-lb (Nm)	5.3–7.1 (0.6–0.8)	5.3–7.1 (0.6–0.8)	5.3–7.1 (0.6–0.8)	5.3–7.1 (0.6–0.8)

Dimensions

Approximate Dimensions in Inches (mm)

Screw Connection Multi-Conductor Terminal Blocks

Catalog Number	Width	Length	Cover Width	Height for— 35 x 7.5 in	35 x 15 in
XBUT25D12	0.20 (5.2)	2.24 (56.8)	0.09 (2.2)	1.87 (47.5)	2.17 (55.0)
XBUT4D12	0.24 (6.2)	2.24 (56.8)	0.09 (2.2)	1.87 (47.5)	2.17 (55.0)
XBUT25D22	0.20 (5.2)	2.52 (64.1)	0.09 (2.2)	1.87 (47.5)	2.17 (55.0)
XBUT4D22	0.24 (6.2)	2.52 (64.1)	0.09 (2.2)	1.87 (47.5)	2.17 (55.0)

Notes

① For ordering information, see **Page V7-T8-103**.

② For information on Printed Marking Tag Options, see **Page V7-T8-98**.

For additional accessories, see **Page V7-T8-90**.

Multi-Conductor Ground Blocks

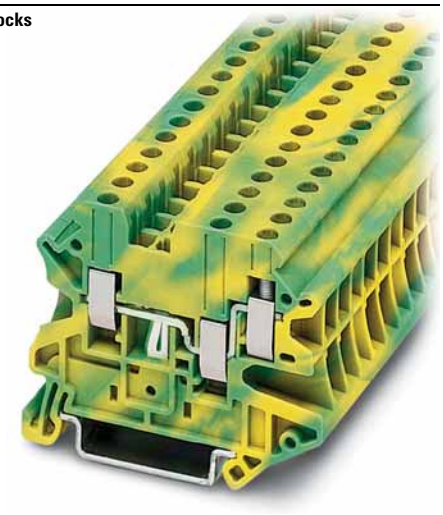

Contents

Description	*Page*
Single Level—Through-Feed	**V7-T8-5**
Single Level—Ground Blocks	**V7-T8-10**
Multi-Conductor Terminal Blocks	**V7-T8-12**
Multi-Conductor Ground Blocks	
Accessories	**V7-T8-15**
Technical Data and Specifications	**V7-T8-15**
Dimensions	**V7-T8-15**
Double Level	**V7-T8-16**
Triple Level Sensor/Actuator	**V7-T8-18**
Fuse Terminal Blocks	**V7-T8-21**
Disconnect and Component Terminal Blocks	**V7-T8-24**
High Current Blocks	**V7-T8-27**
Mini Screw Connection	**V7-T8-29**

8

Multi-Conductor Ground Blocks

Product Description

The ground terminal blocks have the same shape and pitch as the standard terminal block, in a green-yellow housing. They easily snap onto the DIN rail to make a reliable mechanical and electrical contact that meets all requirements of IEC 60-947-7-2.

Product Selection

XBUT4D12PE

Screw Connection Multi-Conductor Ground Blocks—Three-Wire

Terminal Width	Maximum Wire Size	IEC 60 947-7-1 in V/A/AWG	UL-cUL Ratings in V/A/AWG	Color	Standard Pack	Catalog Number
5.2 mm	12 AWG/2.5 mm^2	—/—/26–12	—/—/26–12	Green/Yellow	50	**XBUT25D12PE**
6.2 mm	10 AWG/4 mm^2	—/—/26–10	—/—/26–10	Green/Yellow	50	**XBUT4D12PE**

XBUT25D22PE

Screw Connection Multi-Conductor Ground Blocks—Four-Wire

Terminal Width	Maximum Wire Size	IEC 60 947-7-1 in V/A/AWG	UL-cUL Ratings in V/A/AWG	Color	Standard Pack	Catalog Number
5.2 mm	12 AWG/2.5 mm^2	—/—/26–12	—/—/26–12	Green/Yellow	50	**XBUT25D22PE**
6.2 mm	10 AWG/4 mm^2	—/—/26–10	—/—/26–10	Green/Yellow	50	**XBUT4D22PE**

Accessories

Screw Connection Multi-Conductor Ground Blocks

Description	Color	Number of Positions	Standard Pack	XBUT25D12PE Catalog Number	XBUT4D12PE Catalog Number	XBUT25D22PE Catalog Number	XBUT4D22PE Catalog Number
End cover	Gray	—	50	**XBACUT4D12**	**XBACUT4D12**	**XBACUT4D22**	**XBACUT4D22**
End cover segment	Gray	—	50	**XBASUT4**	**XBASUT4**	**XBASUT4**	**XBASUT4**
Partition plate	—	—	50	**XBATUTD12**	**XBATUTD12**	**XBATUTD22**	**XBATUTD22**
Plug-in bridge—for cross connections in the bridge shaft	Red	2	10	**XBAFBS25**	**XBAFBS26**	**XBAFBS25**	**XBAFBS26**
		3	50	**XBAFBS35**	**XBAFBS36**	**XBAFBS35**	**XBAFBS36**
		5	50	**XBAFBS55**	**XBAFBS56**	**XBAFBS55**	**XBAFBS56**
		10	10	**XBAFBS105**	**XBAFBS106**	**XBAFBS105**	**XBAFBS106**
		50	10	**XBAFBS505**	**XBAFBS506**	**XBAFBS505**	**XBAFBS506**
Test adapter	—	—	10	**XBATSPAI4**	**XBATSPAI4**	**XBATSPAI4**	**XBATSPAI4**
2.3 mm diameter test plug	—	—	—	**XBATSMPS-_** ①	**XBATSMPS-_** ①	**XBATSMPS-_** ①	**XBATSMPS-_** ①
Modular test plug	—	—	10	**XBATSPS5**	**XBATSPS6**	**XBATSPS5**	**XBATSPS6**
Blank marker strip (strip of 10)	White	—	10	**XBMZB5** ②	**XBMZB6** ②	**XBMZB5** ②	**XBMZB6** ②

Technical Data and Specifications

Screw Connection Multi-Conductor Ground Blocks

Description	XBUT25D12PE	XBUT4D12PE	XBUT25D22PE	XBUT4D22PE
Technical Data in Accordance with IEC				
Maximum load current in A/cross-section in mm^2	—	—	—	—
Rated surge voltage in kV/contamination class	6/3	6/3	6/3	6/3
Surge voltage category/insulating material group	III/I	III/I	III/I	III/I
Connection Capacity				
Stranded with ferrule/with ferrule and plastic sleeve in mm^2	0.25–2.5/0.25–2.5	0.25–4/0.25–4	0.25–2.5/0.25–2.5	0.25–4/0.25–4
Multi-Conductor Connection (same cross-section)				
Solid/stranded in mm^2	0.14–1.0/0.14–1.0	0.14–1.0/0.14–1.5	0.14–1.0/0.14–1.0	0.14–1.0/0.14–1.5
Stranded with ferrules without plastic sleeve in mm^2	0.25–1.0	0.25–1.5	0.25–1.0	0.25–1.5
Stranded with twin ferrule with plastic sleeve in mm^2	0.5–1.0	0.5–1.0	0.5–1	0.5–1
Stripping length in inches (mm)	0.31 (8)	0.31 (8)	0.31 (8)	0.31 (8)
Thread	M3	M3	M3	M3
Torque in in-lb (Nm)	5.3–7.1 (0.6–0.8)	5.3–7.1 (0.6–0.8)	5.3–7.1 (0.6–0.8)	5.3–7.1 (0.6–0.8)

Dimensions

Approximate Dimensions in Inches (mm)

Screw Connection Multi-Connector Ground Blocks

Catalog Number	Width	Length	Cover Width	Height for— 35 x 7.5 in	35 x 15 in
XBUT25D12PE	0.20 (5.2)	2.24 (56.8)	0.09 (2.2)	1.87 (47.5)	2.17 (55.0)
XBUT4D12PE	0.24 (6.2)	2.24 (56.8)	0.09 (2.2)	1.87 (47.5)	2.17 (55.0)
XBUT25D22PE	0.20 (5.2)	2.52 (64.1)	0.09 (2.2)	1.87 (47.5)	2.17 (55.0)
XBUT4D22PE	0.24 (6.2)	2.52 (64.1)	0.09 (2.2)	1.87 (47.5)	2.17 (55.0)

Notes

① For ordering information, see **Page V7-T8-103**.

② For information on Printed Marking Tag Options, see **Page V7-T8-98**.

For additional accessories, see **Page V7-T8-90**.

Double Level

Contents

Description	*Page*
Single Level—Through-Feed	**V7-T8-5**
Single Level—Ground Blocks	**V7-T8-10**
Multi-Conductor Terminal Blocks	**V7-T8-12**
Multi-Conductor Ground Blocks	**V7-T8-14**
Double Level	
Accessories	**V7-T8-17**
Technical Data and Specifications	**V7-T8-17**
Dimensions	**V7-T8-17**
Triple Level Sensor/Actuator	**V7-T8-18**
Fuse Terminal Blocks	**V7-T8-21**
Disconnect and Component Terminal Blocks	**V7-T8-24**
High Current Blocks	**V7-T8-27**
Mini Screw Connection	**V7-T8-29**

Double Level

Product Description

The potentials of the XBUTT double-level terminal blocks are on two levels to reduce space requirements by 50% over single-level terminal blocks. The XBUTT Series can be bridged on both levels for maximum flexibility. Marking can be provided at each termination point.

Product Selection

XBUTT4

Screw Connection Double Level Blocks, XBUTT4

Terminal Width	Maximum Wire Size	IEC 60 947-7-1 in V/A/AWG	UL-cUL Ratings in V/A/AWG	Color	Standard Pack	Catalog Number
Screw Connection Double Level Blocks						
6.2 mm	10 AWG/4 mm^2	800/36/26–10	300/30/26–10	Gray	50	**XBUTT4**
				Blue	50	**XBUTT4BU**
				Red	50	**XBUTT4RD**
Screw Connection Double Level Block (terminal block with potential distribution between the levels)						
6.2 mm	10 AWG/4 mm^2	800/36/26–10	300/30/26–10	Gray	50	**XBUTT4PV**

XBUTT4PE

Screw Connection Double Level Ground Block, XBUTT4PE

Terminal Width	Maximum Wire Size	IEC 60 947-7-1 in V/A/AWG	UL-cUL Ratings in V/A/AWG	Color	Standard Pack	Catalog Number
Screw Connection Double Level—Ground Blocks						
6.2 mm	10 AWG/4 mm^2	—/—/26–10	—/—/26–10	Green/Yellow	50	**XBUTT4PE**

Accessories

Screw Connection Terminal/Ground Blocks, Double Level

Description	Color	Number of Positions	Standard Pack	XBUTT4 Catalog Number	XBUTT4PE Catalog Number
End cover	Gray	—	50	**XBACUTT4**	**XBACUTT4**
End cover segment	Gray	—	10	**XBDPUTT4**	**XBDPUTT4**
Partition plate	—	—	50	**XBATUTT4**	**XBATUTT4**
Plug-in bridge—for cross connections in the bridge shaft	Red	2	10	**XBAFBS26**	**XBAFBS26**
		3	50	**XBAFBS36**	**XBAFBS36**
		5	50	**XBAFBS56**	**XBAFBS56**
		10	10	**XBAFBS106**	**XBAFBS106**
		50	10	**XBAFBS506**	**XBAFBS506**
Test adapter	—	—	10	**XBATSPAI4**	**XBATSPAI4**
2.3 mm diameter test plug	—	—	—	**XBATSMPS-_** ①	**XBATSMPS-_** ①
Modular test plug	—	—	10	**XBATSPS6**	**XBATSPS6**
Blank marker strip (strip of 10)	White	—	10	**XBMZB6** ②	**XBMZB6** ②

Technical Data and Specifications

Screw Connection Double Level

Description	XBUTT4	XBUTT4PE
Technical Data in Accordance with IEC		
Maximum load current in A/cross-section in mm^2	30/6	—/6
Rated surge voltage in kV/contamination class	8/3	6/3
Surge voltage category/insulating material group	III/I	III/I
Connection Capacity		
Stranded with ferrule/with ferrule and plastic sleeve in mm^2	0.25–4/0.25–4	0.25–4/0.25–4
Multi-Conductor Connection (same cross-section)		
Solid/stranded in mm^2	0.14–1.5/0.14–1.5	0.14–1.5/0.14–1.5
Stranded with ferrules without plastic sleeve in mm^2	0.25–1.5	0.25–1.5
Stranded with twin ferrule with plastic sleeve in mm^2	0.5–2.5	0.5–2.5
Stripping length in inches (mm)	0.35 (9)	0.35 (9)
Thread	M3	M3
Torque in in-lb (Nm)	5.3–7.1 (0.6–0.8)	5.3–7.1 (0.6–0.8)

Dimensions

Approximate Dimensions in Inches (mm)

Screw Connection Double Level

Catalog Number	Width	Length	Cover Width	Height for— 35 x 7.5 in	35 x 15 in
XBUTT4	0.24 (6.2)	2.75 (69.9)	0.09 (2.2)	2.56 (65.0)	2.85 (72.5)
XBUTT4PE	0.24 (6.2)	2.75 (69.9)	0.09 (2.2)	2.56 (65.0)	2.85 (72.5)

Notes

① For ordering information, see **Page V7-T8-103**.

② For information on Printed Marking Tag Options, see **Page V7-T8-98**.

For additional accessories, see **Page V7-T8-90**.

Triple Level Sensor/Actuator

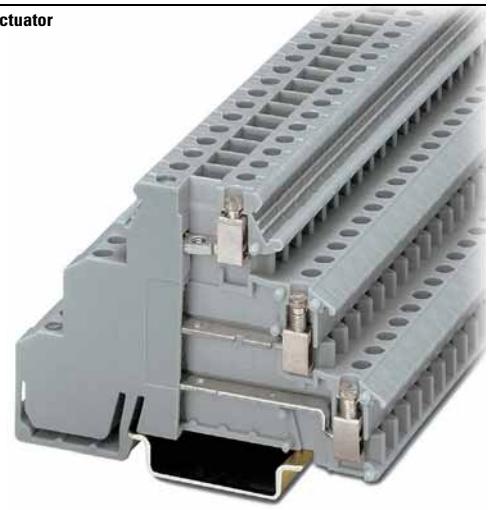

Contents

Description	*Page*
Single Level—Through-Feed	**V7-T8-5**
Single Level—Ground Blocks	**V7-T8-10**
Multi-Conductor Terminal Blocks	**V7-T8-12**
Multi-Conductor Ground Blocks	**V7-T8-14**
Double Level	**V7-T8-16**
Triple Level Sensor/Actuator	
Accessories	**V7-T8-19**
Technical Data and Specifications	**V7-T8-20**
Dimensions	**V7-T8-20**
Fuse Terminal Blocks	**V7-T8-21**
Disconnect and Component Terminal Blocks	**V7-T8-24**
High Current Blocks	**V7-T8-27**
Mini Screw Connection	**V7-T8-29**

Triple Level Sensor/Actuator

Product Description

The XB3UK sensor terminal blocks reduce installation time by terminating three-wire devices such as photoelectric and proximity sensors in a single terminal block. The XB3UK Series accommodates a design where the positive and negative connections are grouped so that only the signal lines and one pair of wires for the power supply need to be wired between the terminal box and the control. The upper level accommodates the markable feed-through terminals for the signal line. The two lower terminal points can be bridged. These are used for the sensor power supply. The positive and negative potential can be fed into the bridges with XB3UKF25. The first sensor can also be connected to this three-wire feed-through block.

Product Selection

XB3UKA25

Screw Connection Triple Level Sensor/Actuator

Terminal Width	Maximum Wire Size	Connection Data in V/A/AWG	IEC 60 947-7-1 in V/A/AWG	UL-cUL Ratings in V/A/AWG	Color	Standard Pack	Catalog Number
Screw Connection Triple Level							
6.2 mm	14 AWG/2.5 mm^2	250/26/24–12	—	300/15/30–14	Gray	50	**XB3UKA25**
Screw Connection Triple Level with Red LED, 15–30 Vdc, 2.5–7.5A							
6.2 mm	14 AWG/2.5 mm^2	250/26/24–12	—	300/15/30–14	Gray	50	**XB3UKA25L24**

XB3UKF25

Screw Connection Triple Level Sensor/Actuator

Terminal Width	Maximum Wire Size	Connection Data in V/A/AWG	IEC 60 947-7-1 in V/A/AWG	UL-cUL Ratings in V/A/AWG	Color	Standard Pack	Catalog Number
Screw Connection Triple Level							
6.2 mm	14 AWG/2.5 mm^2	—	250/30/24–12	300/15/30–14	Gray	50	**XB3UKF25**

XB3UKA25PE

Screw Connection Triple Level Sensor/Actuator

Terminal Width	Maximum Wire Size	Connection Data in V/A/AWG	UL-cUL Ratings in V/A/AWG	Color	Standard Pack	Catalog Number
Screw Connection Triple Level						
6.2 mm	14 AWG/2.5 mm^2	250/26/24–12	300/15/30–14	Gray	50	**XB3UKA25PE**
Screw Connection Triple Level with Red LED, 15–30 Vdc, 2.5–7.5A						
6.2 mm	14 AWG/2.5 mm^2	250/26/24–12	300/15/30–14	Gray	50	**XB3UKA25PEL24**

XB3UKF25PE

Screw Connection Triple Level Sensor/Actuator

Terminal Width	Maximum Wire Size	Connection Data in V/A/AWG	UL-cUL Ratings in V/A/AWG	Color	Standard Pack	Catalog Number
Screw Connection Triple Level						
6.2 mm	14 AWG/2.5 mm^2	—	300/15/30–14	Gray	50	**XB3UKF25PE**

8

Accessories

Screw Connection Triple Level Sensor/Actuator

Description	Color	Number of Positions	Standard Pack	XB3UKA25 Catalog Number	XB3UKF25 Catalog Number	XB3UKA25PE Catalog Number	XB3UKF25PE Catalog Number
Insertion bridge	Blue	80	1	**XBAEB80DIKB**	**XBAEB80DIKB**	**XBAEB80DIKB**	**XBAEB80DIKB**
	Red	80	1	**XBAEB80DIKR**	**XBAEB80DIKR**	**XBAEB80DIKR**	**XBAEB80DIKR**
Insertion bridge	Blue	10	10	**XBAEB10DIKB**	**XBAEB10DIKB**	**XBAEB10DIKB**	**XBAEB10DIKB**
	Red	10	10	**XBAEB10DIKR**	**XBAEB10DIKR**	**XBAEB10DIKR**	**XBAEB10DIKR**
Blank marker strip (strip of 10)	White	—	10	**XBMZB6** ①	**XBMZB6** ②	**XBMZB6** ②	**XBMZB6** ②

Notes

① For information on Printed Marking Tag Options, see **Page V7-T8-98**.

For additional accessories, see **Page V7-T8-90**.

Technical Data and Specifications

Screw Connection Triple Level Sensor/Actuator

Description	XB3UKA25	XB3UKF25	XB3UKA25PE	XB3UKF25PE
Technical Data in Accordance with IEC				
Maximum load current in A/cross-section in mm^2	26/2.5	30/4	26/2.5	26/2.5
Maximum cross section with insertion bridge solid/stranded in mm^2	4/2.5	4/2.5	4/2.5	4/2.5
Rated surge voltage in kV/contamination class	4/3	4/3	4/3	6/3
Surge voltage category/insulating material group	III/I	III/I	III/I	III/I
Connection Capacity				
Stranded with ferrule/with ferrule and plastic sleeve in mm^2	0.25–2.5/0.25–2.5	0.25–2.5/0.25–2.5	0.25–2.5/0.25–2.5	0.25–2.5/0.25–2.5
Multi-Conductor Connection (same cross-section)				
Solid/stranded in mm^2	0.2–1.0/0.2–1.0	0.2–1.0/0.2–1.0	0.2–1.0/0.2–1.0	0.2–1.0/0.2–1.0
Stranded with ferrules without plastic sleeve in mm^2	0.25–1.0	0.25–1.0	0.25–1.0	0.25–1.0
Stranded with twin ferrule with plastic sleeve in mm^2	0.5–1.0	0.5–1.0	0.5–1.0	0.5–1.0
Stripping length in inches (mm)	0.31 (8)	0.31 (8)	0.31 (8)	0.31 (8)
Thread	M3	M3	M3	M3
Torque in in-lb (Nm)	4.4–5.3 (0.5–0.6)	4.4–5.3 (0.5–0.6)	4.4–5.3 (0.5–0.6)	4.4–5.3 (0.5–0.6)

8

Wiring for Three-Level Sensor Terminal Blocks

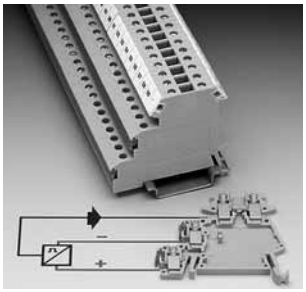

Wiring for Four-Level Sensor Terminal Blocks

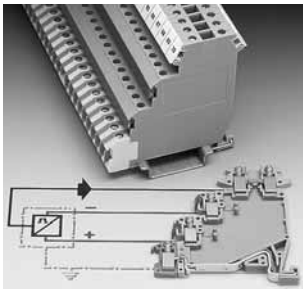

Dimensions

Approximate Dimensions in Inches (mm)

Screw Connection Triple Level Sensor/Actuator

Catalog Number	Width	Length	Height for— 35 x 7.5 in	35 x 15 in
XB3UKA25	0.24 (6.2)	2.17 (55.0)	2.15 (54.5)	2.44 (62.0)
XB3UKF25	0.24 (6.2)	2.85 (72.5)	2.15 (54.5)	2.44 (62.0)
XB3UKA25PE	0.24 (6.2)	2.46 (62.5)	2.76 (70.0)	3.05 (77.5)
XB3UKF25PE	0.24 (6.2)	3.25 (82.5)	2.76 (70.0)	3.05 (77.5)

Fuse Terminal Blocks

Contents

Description	Page
Single Level—Through-Feed	V7-T8-5
Single Level—Ground Blocks	V7-T8-10
Multi-Conductor Terminal Blocks	V7-T8-12
Multi-Conductor Ground Blocks	V7-T8-14
Double Level	V7-T8-16
Triple Level Sensor/Actuator	V7-T8-18
Fuse Terminal Blocks	
Accessories	V7-T8-23
Technical Data and Specifications	V7-T8-23
Dimensions	V7-T8-23
Disconnect and Component Terminal Blocks	V7-T8-24
High Current Blocks	V7-T8-27
Mini Screw Connection	V7-T8-29

Fuse Terminal Blocks

Product Description

The UT Series fuse terminal blocks come in two varieties—lever type and cap. Each performs two functions. They act as a fuse carrier for most common North American and European fuses and they allow for potential distribution with the double bridge shaft. The terminal blocks therefore allow bypass routing of two separate potentials next to each other. This has the advantage of a time-saving potential infeed and a correct, functional configuration of the terminal strip. For signaling a triggered fuse, fuse terminal blocks with light indicators are available (for both AC and DC voltage).

Product Selection

XBUT4FBE

Screw Connection Fuse Terminal Blocks, for 5 x 20 mm Fuse

Terminal Width	Maximum Wire Size	IEC 60 947-7-3 in V/A/AWG	UL-cUL Ratings in V/A/AWG	Color	Standard Pack	Catalog Number
Fuse Terminal Blocks						
6.2 mm	10 AWG/4 mm²	①/6.3/26–10	600/6.3/26–10	Black	50	**XBUT4FBE**
Fuse Terminal Blocks with LED 12–30V, 1–2.5 mA						
6.2 mm	10 AWG/4 mm²	①/6.3/26–10	600/6.3/26–10	Black	50	**XBUT4FBEL24**
Fuse Terminal Blocks with LED 30–60V, 0.8–2.0 mA						
6.2 mm	10 AWG/4 mm²	①/6.3/26–10	600/6.3/26–10	Black	50	**XBUT4FBEL60**
Fuse Terminal Blocks with LED 110–250V, 0.5–2.5 mA						
6.2 mm	10 AWG/4 mm²	①/6.3/26–10	600/6.3/26–10	Black	50	**XBUT4FBEL250**

Note

① As disconnect terminal block 400V, as fuse terminal block 250V.

XBUT6FBN

Screw Connection Fuse Terminal Blocks for 6.3 x 32 mm (1/4 in x 1–1/4 in) Fuse

Terminal Width	Maximum Wire Size	IEC 60 947-7-3 in V/A/AWG	UL-cUL Ratings in V/A/AWG	Color	Standard Pack	Catalog Number
Fuse Terminal Blocks						
8.2 mm	8 AWG/6 mm^2	①/10/24–8	400/10/24–8	Black	50	**XBUT6FBN**
Fuse Terminal Blocks with LED 12–30V, 1–2.5 mA						
8.2 mm	8 AWG/6 mm^2	①/10/24–8	400/10/24–8	Black	50	**XBUT6FBNL24**
Fuse Terminal Blocks with LED 30–60V, 0.8–2.0 mA						
8.2 mm	8 AWG/6 mm^2	①/10/24–8	400/10/24–8	Black	50	**XBUT6FBNL60**
Fuse Terminal Blocks with LED 110–250V, 0.5–2.5 mA						
8.2 mm	8 AWG/6 mm^2	①/10/24–8	400/10/24–8	Black	50	**XBUT6FBNL250**

8

XBUK10FBCE

Screw Connection Fuse Terminal Blocks, XBUK10FBC

Terminal Width	Maximum Wire Size	IEC 60 947-7-3 with Fuse in V/A/AWG	IEC 60 947-7-3 as Disconnected t.b. in V/A/AWG	UL-cUL Ratings in V/A/AWG	Color	Standard Pack	Catalog Number
Fuse Terminal Blocks for 5 x 20 mm fuse							
12 mm	6 AWG/16 mm^2	①/①/20–4	800/10/20–6	300/20/22–6	Black	50	**XBUK10FBCE**
Fuse Terminal Blocks for 6.3 x 32 mm (1/4 in x 1–1/4 in) fuse							
12 mm	6 AWG/16 mm^2	①/①/20–4	800/10/20–6	300/20/22–6	Black	50	**XBUK10FBCN**
Fuse Terminal Blocks with Light Indicator 15–30V, 1–2.5 mA, 5 x 20 mm							
12 mm	6 AWG/16 mm^2	①/①/20–4	800/10/20–6	300/20/22–6	Black	50	**XBUK10FBCEL24**
Fuse Terminal Blocks with Light Indicator 15–30V, 1–2.5 mA, 6.3 x 32 mm							
12 mm	6 AWG/16 mm^2	①/①/20–4	800/10/20–6	300/20/22–6	Black	50	**XBUK10FBCNL24**
Fuse Terminal Blocks with Light Indicator 110–250V, 0.5–1.1A, 5 x 20 mm							
12 mm	6 AWG/16 mm^2	①/①/20–4	800/10/20–6	300/20/22–6	Black	50	**XBUK10FBCEL250**
Fuse Terminal Blocks with Light Indicator 110–250V, 0.5–1.1A, 6.3 x 32 mm							
12 mm	6 AWG/16 mm^2	①/①/20–4	800/10/20–6	300/20/22–6	Black	50	**XBUK10FBCNL250**

Cartridge Fuse Inserts 5 x 20 mm Based on DIN EN 60 947-7-3: 2003-7

Terminal Blocks	U (V)	Overload Protection		Short-Circuit Protection Only		$I_{max.}$ (A)
		Individual	Interconnected	Individual	Interconnected	
XBUT4FBE	250	1.6W	1.6W	4W	2.5W	6.3

Notes

Max. power dissipation at 73.4°F (23°C) based on DIN EN 60 947-7-3: 2003-7.

When selecting cartridge fuse inserts, please ensure that the maximum power dissipation specified above is not exceeded. Details can be obtained from the fuse suppliers.

If the fuse is defective, the downstream circuit is not off load.

① As disconnect terminal block 500V, as fuse terminal block 400V.

Accessories

Screw Connection Fuse Terminal Blocks

Description	Color	Number of Positions	Standard Pack	XBUT4FBE Catalog Number	XBUT6FBN Catalog Number	XBUK10FBCE Catalog Number
End cover	—	—	—	①	①	—
Plug-in bridge—for cross connections in the bridge shaft	Red	2	10	**XBAFBS26**	**XBAFBS28**	—
		3	50	**XBAFBS36**	**XBAFBS38**	—
		5	50	**XBAFBS56**	**XBAFBS58**	—
		10	10	**XBAFBS106**	**XBAFBS108**	—
		50	10	**XBAFBS506**	—	—
Blank marker strip center labeling (strip of 10)	White	—	—	**XBMZB5** ②	**XBMZB6** ②	—
Blank marker strip external labeling (strip of 10)	White	—	—	**XBMZB6** ②	**XBMZB8** ②	—
Fixed bridge	—	2	10	—	—	**XBAFBI212**
Screw heads with insulating collar	—	10	10	—	—	**XBAFBI1012**
Blank marker strip (strip of 10)	White	—	10	—	—	**XBMZB6** ②

Technical Data and Specifications

Screw Connection Fuse Terminal Blocks

Description	XBUT4FBE	XBUT4FBN	XBUK10FBCE
Technical Data in Accordance with IEC			
Fuse type/dimensions in (mm)	—	—	G/5 x 20/5 x 25/6.3 x 32
Maximum cross section with insertion bridge solid/stranded in mm^2	6.3/6	10/10	10/10
Rated surge voltage in kV/contamination class	4/3	4/3	4/3
Surge voltage category/insulating material group	III/II	III/II	III/I
Connection Capacity			
Stranded with ferrule/with ferrule and plastic sleeve in mm^2	0.25–4/0.25–4	0.25–6/0.25–6	0.5–10/0.5–10
Multi-Conductor Connection (same cross-section)			
Solid/stranded in mm^2	0.14–1.5/0.14–1.5	—	0.5–4/0.5–4
Stranded with ferrules without plastic sleeve in mm^2	0.25–1.5	—	0.5–4
Stranded with twin ferrule with plastic sleeve in mm^2	0.5–2.5	0.5–4	0.5–10
Stripping length in inches (mm)	0.35 (9)	0.39 (10)	0.43 (11)
Thread	M3	M4	M4
Torque in in-lb (Nm)	5.3–7.1 (0.6–0.8)	13.3–15.9 (1.5–1.8)	13.3–15.9 (1.5–1.8)

Dimensions

Approximate Dimensions in Inches (mm)

Screw Connection Fuse Terminal Blocks

Catalog Number	Width	Length	Height for— 35 x 7.5 in	35 x 15 in	32 in
XBUT4FBE	0.24 (6.2)	2.24 (56.8)	2.87 (73.0)	3.17 (80.5)	—
XBUT4FBN	0.32 (8.2)	2.24 (56.8)	2.87 (73.0)	3.17 (80.5)	—
XBUK10FBCE	0.47 (12.0)	2.44 (62.0)	2.32 (59.0)	2.62 (66.5)	2.52 (64.0)

Notes

① XBUT4FBE and XBUT6FBN have an enclosed design. The use of an end cover is not required.

② For information on Printed Marking Tag Options, see **Page V7-T8-98**.

For additional accessories, see **Page V7-T8-90**.

Disconnect and Component Terminal Blocks

Contents

Description	*Page*
Single Level—Through-Feed	**V7-T8-5**
Single Level—Ground Blocks	**V7-T8-10**
Multi-Conductor Terminal Blocks	**V7-T8-12**
Multi-Conductor Ground Blocks	**V7-T8-14**
Double Level	**V7-T8-16**
Triple Level Sensor/Actuator	**V7-T8-18**
Fuse Terminal Blocks	**V7-T8-21**
Disconnect and Component Terminal Blocks	
Product Selection	**V7-T8-25**
Accessories	**V7-T8-26**
Technical Data and Specifications	**V7-T8-26**
Dimensions	**V7-T8-26**
High Current Blocks	**V7-T8-27**
Mini Screw Connection	**V7-T8-29**

8

Disconnect and Component Terminal Blocks

Product Description

The ***XB*** Series includes application specific terminal blocks like the XBUT4TG disconnect block that accommodates disconnect component and fuse terminal blocks. It can also be bridged with standard terminal blocks via the double bridge shaft. The component plug XBPCO serves to accommodate different components such as resistors or capacitors.

5 x 20 mm fuses can be inserted into the fuse plug XBPFU, also available with light indication. The XBUT4MT knife disconnect terminal block features a compact design and a high current carrying capacity of 16A. Versions with test socket screws provide a test option for 2.3 mm diameter test plugs on both sides of the disconnect point.

Product Selection

XBUT4TG Disconnect

Screw Connection Disconnect and Component Terminal Blocks

Terminal Width	Maximum Wire Size	Connection Data in V/A/AWG	UL-cUL Ratings for Disconnect in V/A/AWG	UL-cUL Ratings for Disconnect with Test Sockets in V/A/AWG	Color	Standard Pack	Catalog Number
Screw Connection Disconnect							
6.2 mm	10 AWG/4 mm^2	500/16/26–10	600/16/26–10	300/16/26–10	Gray	50	**XBUT4TG**
Screw Connection Disconnect with Test Sockets							
6.2 mm	10 AWG/4 mm^2	500/16/26–10	600/16/26–10	300/16/26–10	Gray	50	**XBUT4TGP**
Component Plug							
6.2 mm	10 AWG/4 mm^2	500/16/26–10	600/16/26–10	300/16/26–10	Gray	10	**XBPCO**
Fuse Plug							
6.2 mm	10 AWG/4 mm^2	500/16/26–10	600/16/26–10	300/16/26–10	Black	10	**XBPFU**
Fuse Plug with Light Indicator for 12–30V, 1–2.5 mA							
6.2 mm	10 AWG/4 mm^2	500/16/26–10	600/16/26–10	300/16/26–10	Black	10	**XBPFUL24**
Fuse Plug with Light Indicator for 110–250V, 0.5–2.5 mA							
6.2 mm	10 AWG/4 mm^2	500/16/26–10	600/16/26–10	300/16/26–10	Black	10	**XBPFUL250**
Screw Connection Disconnect Knife Disconnect							
6.2 mm	10 AWG/4 mm^2	500/16/26–10	600/16/26–10	300/16/26–10	Gray	50	**XBUT4MT**
Screw Connection Disconnect Knife Disconnect with Test Sockets							
6.2 mm	10 AWG/4 mm^2	500/16/26–10	600/16/26–10	300/16/26–10	Gray	50	**XBUT4MTP**
Screw Connection Terminal Blocks with Integrated Diodes							
6.2 mm	12 AWG/4 mm^2	500/32/24–10	600/30/26–10	—	Gray	50	**XBUKK4DIO**

XBTKT25 Thermal Electric Voltage

Screw Connection Thermoelectric Voltage Terminal Blocks

Terminal Width	Maximum Wire Size	Connection Data in V/A/AWG	UL-cUL Ratings in V/A/AWG	Color	Standard Pack	Catalog Number
Copper/Constantan (CU/CUNI44)						
10.4 mm	12 AWG/2.5 mm^2	400/—/24–12	300/10/28–12	Gray	50	**XBTKT25 (Type T)**
Iron/Constantan (FE/CUNI44)						
10.4 mm	12 AWG/2.5 mm^2	400/—/24–12	300/10/28–12	Gray	50	**XBTKJ25 (Type J)**
Nickel-Chrome/Constantan (NICR/CUNI44)						
10.4 mm	12 AWG/2.5 mm^2	400/—/24–12	300/10/28–12	Gray	50	**XBTKE25 (Type E)**
Nickel-Chrome/Nickel (NICRNI)						
10.4 mm	12 AWG/2.5 mm^2	400/—/24–12	300/10/28–12	Gray	50	**XBTKK25 (Type K)**
Copper/Copper Nickel (E-CU/A-CU)						
10.4 mm	12 AWG/2.5 mm^2	400/—/24–12	300/10/28–12	Gray	50	**XBTKR25 (Type R)**

Accessories

Screw Connection Disconnect and Component Terminal Blocks

Description	Color	Number of Positions	Standard Pack	XBUT4TG Catalog Number	XBUT4MT Catalog Number	XBUKK4DI0 Catalog Number	XBTKT25 Catalog Number
Plug-in bridge—for cross connections in the bridge shaft	Red	2	10	**XBAFBS26**	**XBAFBS26**	—	—
		3	50	**XBAFBS36**	**XBAFBS36**	—	—
		5	50	**XBAFBS56**	**XBAFBS56**	—	—
		10	10	**XBAFBS106**	**XBAFBS106**	—	—
		50	10	**XBAFBS506**	**XBAFBS506**	—	—
Test adapter	—	—	10	**XBATSPAI4**	**XBATSPAI4**	—	—
2.3 mm diameter test plug	—	—	—	**XBATSMPS-_** ①	**XBATSMPS-_** ①	—	—
Modular test plug	—	—	10	**XBATSDPPS6**	**XBATSDPPS6**	—	—
Blank marker strip (strip of 10)	White	—	10	**XBMZB6** ②	**XBMZB6** ②	**XBMZB6** ②	**XBMZB10** ②
End cover	Gray	—	10	—	—	**XBACUKK35**	**XBACTK4**
Spacer cover	Gray	—	10	—	—	**XBADGUKK35**	—
Spacer plate	—	—	10	—	—	**XBADPUKK35**	—
Partition plate	—	—	—	—	—	—	**XBATTK4**
Fixed bridge	—	10	10	—	—	**XBAFBI106**	—

Technical Data and Specifications

Screw Connection Disconnect and Component Terminal Blocks

Description	XBUT4TG	XBUT4MT	XBUKK4DI0	XBTK
Technical Data in Accordance with IEC				
Maximum load current in A/cross-section in mm^2	16/6	16/6	32/4	—
Rated surge voltage in kV/contamination class	6/3	6/3	6/3	—
Surge voltage category/insulating material group	III/I	III/I	III/I	—
Connection Capacity				
Stranded with ferrule/with ferrule and plastic sleeve in mm^2	0.25–4/0.25–4	0.25–4/0.25–4	0.25–4/0.25–2.5	—
Multi-Conductor Connection (same cross-section)				
Solid/stranded in mm^2	0.14–1.5/0.14–1.5	0.14–1.5/0.14–1.5	0.2–1.5/0.2–1.5	—
Stranded with ferrules without plastic sleeve in mm^2	0.25–1.5	0.25–1.5	0.25–1.5	—
Stranded with twin ferrule with plastic sleeve in mm^2	0.5–2.5	0.5–2.5	0.5–1.5	—
Stripping length in inches (mm)	0.35 (9)	0.35 (9)	0.31 (8)	0.28 (7)
Thread	M3	M3	M3	M3
Torque in in-lb (Nm)	5.3–7.1 (0.6–0.8)	5.3–7.1 (0.6–0.8)	5.3–7.1 (0.6–0.8)	5.3–7.1 (0.6–0.8)

Dimensions

Approximate Dimensions in Inches (mm)

Screw Connection Disconnect and Component Terminal Blocks

Catalog Number	Width	Length	Cover Width	Height for— 35 x 7.5 in	35 x 15 in	32 in
XBUT4TG	0.24 (6.2)	2.24 (56.8)	—	1.87 (47.5)	2.17 (55.0)	—
XBUT4MT	0.24 (6.2)	2.24 (56.8)	—	1.87 (47.5)	2.17 (55.0)	—
XBUKK4DI0	0.24 (6.2)	2.20 (56.0)	0.10 (2.5)	2.44 (62.0)	2.74 (69.5)	2.64 (67.0)
XBTK	0.20 (5.2)	1.81 (46.0)	0.04 (1.0)	1.57 (40.0)	1.87 (47.5)	1.77 (45.0)

Notes

① For ordering information, see **Page V7-T8-103**.

② For information on Printed Marking Tag Options, see **Page V7-T8-98**.

For additional accessories, see **Page V7-T8-90**.

High Current Blocks

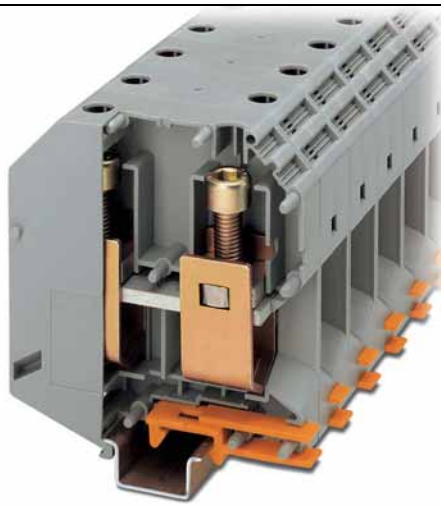

Contents

Description	Page
Single Level—Through-Feed	V7-T8-5
Single Level—Ground Blocks	V7-T8-10
Multi-Conductor Terminal Blocks	V7-T8-12
Multi-Conductor Ground Blocks	V7-T8-14
Double Level	V7-T8-16
Triple Level Sensor/Actuator	V7-T8-18
Fuse Terminal Blocks	V7-T8-21
Disconnect and Component Terminal Blocks	V7-T8-24
High Current Blocks	
Accessories	V7-T8-28
Technical Data and Specifications	V7-T8-28
Dimensions	V7-T8-28
Mini Screw Connection	V7-T8-29

High Current Blocks

Product Description

Eaton's XBUK high current terminal blocks offer a reliable connection via the superior construction that includes three-point centering of the wire in the prism-shaped sleeve base, a fluted contact surface for low contact resistance, and screws secured with spring-loaded elements. The terminal blocks have an enclosed housing made from polyamide 6.6. Green-yellow ground terminal blocks are also available.

Product Selection

XBUK150

Screw Connection High Current Blocks

Terminal Width	Maximum Wire Size	IEC 60 947-7-1 in V/A/AWG	EN 50 019 in V/A/AWG	UL-cUL Ratings in V/A/AWG	Color	Standard Pack	Catalog Number
20.0 mm	1/0/50 mm²	1000/150/1/0	750/135/1/0	600/150/1/0	Gray	10	**XBUK50**
					Blue	10	**XBUK50BU**
31.0 mm	300 kcmil/150 mm²	1000/309/2–300	726/265/2–300	600/285/ 2 AWG–300 kcmil	Gray	10	**XBUK150**

XBUK95PE

Screw Connection High Current Ground Blocks

Terminal Width	Maximum Wire Size	IEC 60 947-7-1 in V/A/AWG	EN 50 019 in V/A/AWG	UL-cUL Ratings in V/A/AWG	Color	Standard Pack	Catalog Number
25.0 mm	000 AWG/95 mm²	—/232/4–000	—/—/4–000	—/—/2–4/0	Green/Yellow	10	**XBUK95PE**

Accessories

Screw Connection High Current Blocks

Description	Color	Number of Positions	Standard Pack	XBUK50 Catalog Number	XBUK150 Catalog Number	XBUK95PE Catalog Number
Fixed bridge, screw heads with insulating color	—	2	10	**XBAFBI220**	—	—
Insertion bridge	—	2	10	—	**XBAEB231**	—
Blank marker strip external labeling (strip of 10)	White	—	10	**XBMZB10** ①	**XBMZB10** ①	**XBMZB10** ①

Technical Data and Specifications

Screw Connection High Current Blocks

8

Description	XBUK50	XBUK150	XBUK95PE
Technical Data in Accordance with IEC			
Maximum load current in A/cross-section in mm^2	150/50	309/150	232/95
Maximum cross-section with insertion bridge solid/stranded in mm^2	—/—	150/120	—/—
Rated surge voltage in kV/contamination class	8/3	8/3	8/3
Surge voltage category/insulating material group	III/I	III/I	III/I
Connection Capacity			
Stranded with ferrule/with ferrule and plastic sleeve in mm^2	25–50/25–50	50–150/50–150	35–95/35–95
Multi-Conductor Connection (same cross-section)			
Solid/stranded in mm^2	10–16/10–16	25–50/35–50	25–35/25–35
Stranded with ferrules without plastic sleeve in mm^2	10–16	25–50	16–35
Stripping length in inches (mm)	0.94 (24)	1.57 (40)	1.18 (30)
Thread	M6	M10	M8
Terminal point—thread/torque in in-lb (Nm)	53–71 (6–8)	221–267 (25–30)	133–177 (15–20)
Fastening—thread/torque in in-lb (Nm)	53–71 (6–8)	221–267 (25–30)	133–177 (15–20)

Dimensions

Approximate Dimensions in Inches (mm)

Screw Connection High Current Blocks

Catalog Number	Width	Length	Height for— 35 x 7.5 in	35 x 15 in	32 in
XBUK50	0.79 (20.0)	2.78 (70.5)	3.29 (83.5)	3.21 (81.5)	—
XBUK150	1.22 (31.0)	3.94 (100.0)	4.67 (118.5)	4.57 (116.0)	—
XBUK95PE	0.98 (25.0)	3.27 (83.0)	—	3.90 (99.0)	3.80 (96.5)

Notes

① For information on Printed Marking Tag Options, see **Page V7-T8-98**.

For additional accessories, see **Page V7-T8-90**.

Mini Screw Connection Terminal Blocks

Contents

Description	Page
Single Level—Through-Feed	V7-T8-5
Single Level—Ground Blocks	V7-T8-10
Multi-Conductor Terminal Blocks	V7-T8-12
Multi-Conductor Ground Blocks	V7-T8-14
Double Level	V7-T8-16
Triple Level Sensor/Actuator	V7-T8-18
Fuse Terminal Blocks	V7-T8-21
Disconnect and Component Terminal Blocks	V7-T8-24
High Current Blocks	V7-T8-27
Mini Screw Connection	
Accessories	V7-T8-30
Technical Data and Specifications	V7-T8-30
Dimensions	V7-T8-30

Mini Screw Connection

Product Description

The ***XB*** miniature terminal blocks have a connection cross-section from 2 mm^2 through 4 mm^2 and mount on 15 mm DIN rail. There is an opening for bridging with a fixed bridge in the center of the terminal blocks. These miniature terminal blocks also offer the same accessories that you would find with the larger blocks—including marking tags, end covers, end stop and ground blocks.

Product Selection

XBMUK4

Mini Screw Connection Terminal Blocks

Terminal Width	Maximum Wire Size	IEC 60 947-7-1 in V/A/AWG	EN 50 019 in V/A/AWG	UL-cUL Ratings in V/A/AWG	Color	Standard Pack	Catalog Number
5.2 mm	12 AWG/2.5 mm^2	400/32/24–12	275/28/21/24–12	600/20/28–12	Gray	50	**XBMUK25**
					Blue	50	**XBMUK25BU**
6.2 mm	10 AWG/4 mm^2	500/41/24–10	—/—/—	600/10/26–10	Gray	50	**XBMUK4**
					Blue	50	**XBMUK4BU**

XBMUK25PE

Mini Screw Connection Ground Blocks

Terminal Width	Maximum Wire Size	IEC 60 947-7-2 in V/A/AWG	UL-cUL Ratings in V/A/AWG	Color	Standard Pack	Catalog Number
5.2 mm	12 AWG/2.5 mm^2	—/—/24–12	—/—/30–12	Green/ Yellow	50	**XBMUK25PE**
6.2 mm	10 AWG/2.4 mm^2	—/—/24–10	—/—/26–14	Green/ Yellow	50	**XBMUK4PE**

Accessories

Mini Screw Connection Terminal/Ground Blocks

Description	Color	Number of Positions	Standard Pack	XBMUK25 Catalog Number	XBMUK4 Catalog Number	XBMUK25PE Catalog Number	XBMUK4PE Catalog Number
End cover	Gray	—	50	**XBACMU254**	**XBACMU254**	—	—
	Blue	—	50	**XBACMU254B**	**XBACMU254B**	—	—
Partition plate	—	—	50	**XBATMU254**	**XBATMU254**	—	—
Fixed bridge	—	10	10	**XBAFBR105N**	—	—	—
Separating plate	—	—	10	**XBATMPKK15**	**XBATMPKK15**	—	—
Blank marker strip (strip of 10)	White	—	10	**XBMZB5** ①	**XBMZB6** ①	**XBMZB5** ①	**XBMZB6** ①

8

Technical Data and Specifications

Mini Spring Cage Terminal/Ground Blocks

Description	XBMUK25	XBMUK4	XBMUK25PE	XBMUK4PE
Technical Data in Accordance with IEC				
Maximum load current in A/cross-section in mm^2	32/4	41/6	—	—
Maximum cross-section with insertion bridge (solid/stranded)	2.5/2.5	4/4	—	—
Rated surge voltage in kV/contamination class	6/3	6/3	6/3	6/3
Surge voltage category/insulating material group	III/I	III/I	III/I	III/I
Connection Cross-Section				
Stranded with ferrule with plastic sleeve in mm^2	0.25–1.5	0.25–2.5	0.25–1.5	0.25–2.5
Stranded with ferrule without plastic sleeve in mm^2	0.25–2.5	0.25–4	0.25–2.5	0.25–4
Multi-Conductor Connection (same cross-section)				
Solid/stranded in mm^2	0.2–1.0/0.2–1.5	0.2–1.5/0.2–1.5	0.2–1.0/0.2–1.5	0.2–1.5/0.2–1.5
Stranded with ferrule without plastic sleeve in mm^2	0.25–1.5	0.25–1.5	0.25–1.5	0.25–1.5
Stranded with ferrule with plastic sleeve in mm^2	0.5–1.0	0.5–2.5	0.5–1.5	0.5–2.5
Stripping length in Inches (mm)	0.31 (8)	0.31 (8)	0.31 (8)	0.31 (8)
Thread	M3	M3	M3	M3
Torque in in-lb (Nm)	5.3–7.1 (0.6–0.8)	4.4–5.3 (0.5–0.6)	5.3–7.1 (0.6–0.8)	5.3–7.1 (0.6–0.8)

Dimensions

Approximate Dimensions in Inches (mm)

Mini Spring Cage Terminal/Ground Blocks

Catalog Number	Width	Length	Cover Length	Height for— 15 in
XBMUK25	0.20 (5.2)	1.10 (28.0)	0.04 (1.0)	1.26 (32.0)
XBMUK4	0.24 (6.2)	1.10 (28.0)	0.04 (1.0)	1.26 (32.0)
XBMUK25PE	0.20 (5.2)	1.10 (28.0)	—	1.24 (31.5)
XBMUK4PE	0.24 (6.2)	1.10 (28.0)	—	1.26 (32.0)

Notes

① For information on Printed Marking Tag Options, see **Page V7-T8-98**.

For additional accessories, see **Page V7-T8-90**.

Spring Cage Connection

Contents

Description	*Page*
Spring Cage Terminal Blocks	
Single Level—Through-Feed	**V7-T8-32**
Single Level—Ground Blocks	**V7-T8-37**
Multi-Conductor Terminal Blocks	**V7-T8-39**
Multi-Conductor Ground Blocks	**V7-T8-42**
Double Level Blocks	**V7-T8-44**
Triple Level Blocks	**V7-T8-46**
Fuse Terminal Blocks	**V7-T8-48**
Disconnect and Component Terminal Blocks	**V7-T8-51**
Hybrid Terminal Blocks	**V7-T8-54**
Mini Spring Cage	**V7-T8-56**

Drawings Online

Spring Cage Terminal Blocks Overview

Product Description

The XBPT Series incorporates a spring cage connection system proven in applications that are sensitive to vibration. The spring mechanism always exerts the same constant force on the wire, resulting in a vibration-proof, gas-tight connection, independent of the user. The space-saving front connection, with the wire and screwdriver coming in parallel from the same direction, allows for simple wiring in places where there is little space available.

Application Description

The connection point is opened with a standard screwdriver. After the wire has been inserted into the wire guide of the terminal block, the screwdriver is removed and the wire automatically makes contact.

Features

- Vibration-resistance
- Global acceptance
- Multi-conductor connections
- Flexible Plug-in bridge system
- Large surface area for marking
- Standardized testing system

Standards and Certifications

- UL recognized—File No. E67464
- CE approved
- LVD ①:
  - EN 60947-7-1
  - EN 60947-7-2
  - EN 60998-2-3
  - EN 60352-4/A1

Note

① Not all standards apply to all terminal blocks. Contact Eaton for details.

Single Level—Through-Feed

Contents

Description	*Page*
Single Level—Through-Feed	
Accessories	**V7-T8-34**
Technical Data and Specifications	**V7-T8-36**
Dimensions	**V7-T8-36**
Single Level—Ground Blocks	**V7-T8-37**
Multi-Conductor Terminal Blocks	**V7-T8-39**
Multi-Conductor Ground Blocks	**V7-T8-42**
Double Level Blocks	**V7-T8-44**
Triple Level Blocks	**V7-T8-46**
Fuse Terminal Blocks	**V7-T8-48**
Disconnect and Component Terminal Blocks	**V7-T8-51**
Hybrid Terminal Blocks	**V7-T8-54**
Mini Spring Cage	**V7-T8-56**

8

Single Level—Through-Feed

Product Description

The space-saving design and front entry design make the XBPT Series ideal for control systems where there is little space. Even so, they offer maximum connection space, resulting in fast wiring of stranded and solid conductors with or without ferrules.

XBPT terminal blocks are available with cross-sections from 2.5 mm^2 up to 35 mm^2. The double bridge shaft can accommodate individual chain bridging and step-down bridging from other terminal blocks.

Product Selection

XBPT6

Spring Cage Connection Single Level—Through-Feed

Terminal Width	Maximum Wire Size	IEC 60 947-7-1 in V/A/AWG	EN 50 019 in V/A/AWG	UL-cUL Ratings in V/A/AWG	Color	Standard Pack	Catalog Number
5.2 mm	12 AWG/2.5 mm^2	800/31/28–12	550/25/21/24–12	600/20/26–12	Gray	50	**XBPT25**
					Blue	50	**XBPT25BU**
					White	50	**XBPT25WH**
					Red	50	**XBPT25RD**
					Black	50	**XBPT25BK**
6.2 mm	10 AWG/4 mm^2	800/40/28–10	550/34/30/24–10	600/30/20–10	Gray	50	**XBPT4**
					Blue	50	**XBPT4BU**
8.2 mm	8 AWG/6 mm^2	800/52/24–8	550/45/36/20–8	600/50/20–8	Gray	50	**XBPT6**
					Blue	50	**XBPT6BU**
10.2 mm	6 AWG/10 mm^2	800/65/24–6	550/50/63/16–6	600/65/16–6	Gray	50	**XBPT10**
					Blue	50	**XBPT10BU**
12 mm	4 AWG/16 mm^2	800/90/24–4	550/65/82/16–4	600/50/16–4	Gray	50	**XBPT16**
					Blue	50	**XBPT16BU**
16 mm	2 AWG/35 mm^2	800/125/14–2	750/108/14–2	600/115/14–2	Gray	10	**XBPT35**
					Blue	10	**XBPT35BU**

Accessories

Spring Cage Connection Single Level—Through-Feed, XBPT25, XBPT4 and XBPT6

Description	Color	Number of Positions	Standard Pack	XBPT25 Catalog Number	XBPT4 Catalog Number	XBPT6 Catalog Number
End cover	Gray	—	50	**XBACPT25**	**XBACPT4**	**XBACPT6**
Partition plate	Gray	—	50	**XBATPT4**	**XBATPT4**	**XBATPT6**
Plug-in bridge—for cross connections in the bridge shaft	Red	2	10	**XBAFBS25**	**XBAFBS26**	**XBAFBS28**
		3	50	**XBAFBS35**	**XBAFBS36**	—
		5	50	**XBAFBS55**	**XBAFBS56**	—
		10	10	**XBAFBS105**	**XBAFBS106**	—
		50	10	**XBAFBS505**	**XBAFBS506**	—
Test adapter	—	—	10	**XBATSPAI4**	**XBATSPAI4**	**XBATSPAI4**
2.3 mm diameter test plug	—	—	—	**XBATSMPS-_** ①	**XBATSMPS-_** ①	**XBATSMPS-_** ①
Modular test plug	—	—	10	**XBATSPS5**	**XBATSPS6**	**XBATSPS8**
Blank marker strip external labeling	White	—	10	**XBMZBF5** ②	**XBMZBF6** ②	**XBMZF8** ②
Blank marker strip center labeling (strip of 10)	White	—	10	**XBMZB5** ②	**XBMZB6** ②	**XBMZB8** ②

Spring Cage Connection Single Level—Through-Feed, XBPT10, XBPT16 and XBPT35

Description	Color	Number of Positions	Standard Pack	XBPT10 Catalog Number	XBPT16 Catalog Number	XBPT35 Catalog Number
End cover	Gray	—	50	**XBACPT10**	**XBACPT16**	③
Plug-in bridge—for cross connections in the bridge shaft	Red	2	10	**XBAFBS210**	**XBAFBS212** ①	**XBAFBS216** ②
2.3 mm diameter test plug	—	—	10	**XBATSMPS-_** ①	**XBATSMPS-_** ①	**XBATSMPS-_** ①
Blank marker strip external labeling	White	—	10	**XBMZF10** ②	**XBMZBF12** ②	**XBMZBF15** ②
Blank marker strip center labeling (strip of 10)	White	—	10	**XBMZB10** ②	**XBMZB12** ②	**XBMZB15** ②

Notes

① For ordering information, see **Page V7-T8-103**.

② For information on Printed Marking Tag Options, see **Page V7-T8-98**.

③ XBPT35 has an enclosed design. The use of an end cover is not required.

For additional accessories, see **Page V7-T8-90**.

XBPT with Reducing Bridge

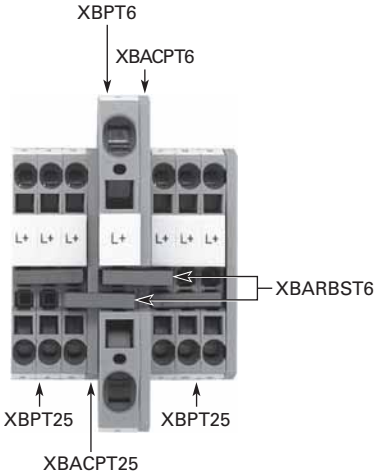

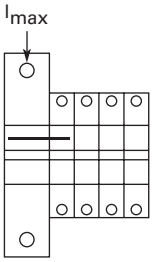

One-Sided Input

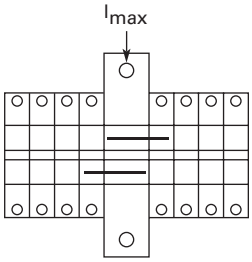

Central Input

Step-Down Bridge with Standard Feed-Through Terminal Blocks

Input Terminal Blocks	Cross-Section	Pick-Off Terminal Blocks	Cross-Section AWG (mm²)	One-Sided Input I_{max}	Central Input I_{max}	Bridge Catalog Number
XBPT6	8 AWG (6 mm²)	XBPT25	12 (2.5)	40	56	**XBARBST6**
		XBPT4	10 (4)	45	56	**XBARBST6**
		XBQT15	14 (1.5)	35	56	**XBARBST6**
		XBQT25	12 (2.5)	40	56	**XBARBST6**
XBPT10	6 AWG (10 mm²)	XBPT25	12 (2.5)	40	65	**XBARBST10**
		XBPT4	10 (4)	45	65	**XBARBST10**
		XBQT15	14 (1.5)	35	65	**XBARBST10**
		XBQT25	12 (2.5)	40	65	**XBARBST10**
XBPT16	4 AWG (16 mm²)	XBPT25	12 (2.5)	40	80	**XBARBST16**
		XBPT4	10 (4)	45	90	**XBARBST16**
		XBQT15	14 (1.5)	35	70	**XBARBST16**
		XBQT25	12 (2.5)	40	80	**XBARBST16**

Technical Data and Specifications

Spring Cage Connection Single Level—Through-Feed

Description	XBPT25	XBPT4	XBPT6	XBPT10	XBPT16	XBPT35
Technical Data in Accordance with IEC						
Maximum load current in A/cross-section in mm^2	31/4	40/6	52/10	65/16	90/25	125/35
Rated surge voltage in kV/contamination class	8/3	8/3	8/3	8/3	8/3	8/3
Surge voltage category/insulating material group	III/I	III/I	III/I	III/I	III/I	III/I
Connection Capacity						
Stranded with ferrule/with ferrule and plastic sleeve in mm^2	0.25–2.5	0.25–4	0.25–6	0.25–10	0.25–16	2.5–35
Stranded with ferrules without plastic sleeve in mm^2	0.25–2.5	0.25–4	0.25–6	0.25–10	0.25–16	2.5–35
Stranded with twin ferrule with plastic sleeve in mm^2	0.5	0.5–1	0.5–1.5	1.5–2.5	1.5–4	2.5–10
Stripping length in inches (mm)	0.39 (10)	0.39 (10)	0.47 (12)	0.71 (18)	0.71 (18)	0.98 (25)

Dimensions

Approximate Dimensions in Inches (mm)

Spring Cage Connection Single Level—Through-Feed

Catalog Number	Width	Length	Cover Width	Height for— 35 x 7.5 in	35 x 15 in
XBPT25	0.20 (5.2)	1.91 (48.5)	0.09 (2.2)	1.45 (36.8)	1.73 (44.0)
XBPT4	0.24 (6.2)	2.20 (56.0)	0.09 (2.2)	1.45 (36.8)	1.73 (44.0)
XBPT6	0.32 (8.2)	2.74 (69.5)	0.09 (2.2)	1.71 (43.5)	2.01 (51.0)
XBPT10	0.39 (10.0)	2.81 (71.5)	0.09 (2.2)	1.99 (50.5)	2.30 (58.5)
XBPT16	0.47 (12.0)	3.15 (80.0)	0.09 (2.2)	2.01 (51.0)	2.30 (58.5)
XBPT35	0.63 (16.0)	3.94 (100.0)	①	2.32 (59.0)	2.62 (66.5)

Note

① XBPT35 has an enclosed design. The use of an end cover is not required.

Single Level—Ground Blocks

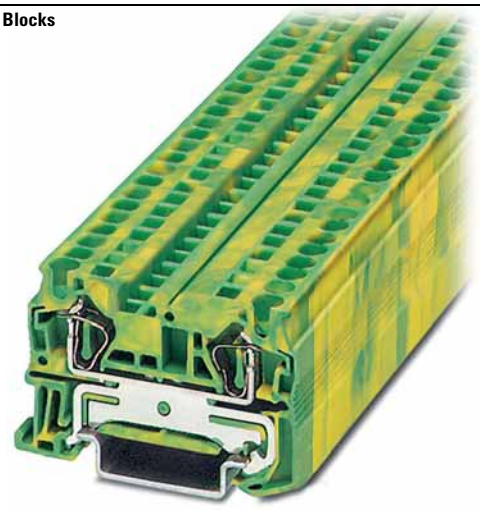

Contents

Description	Page
Single Level—Through-Feed	V7-T8-32
Single Level—Ground Blocks	
Accessories	V7-T8-38
Technical Data and Specifications	V7-T8-38
Dimensions	V7-T8-38
Multi-Conductor Terminal Blocks	V7-T8-39
Multi-Conductor Ground Blocks	V7-T8-42
Double Level Blocks	V7-T8-44
Triple Level Blocks	V7-T8-46
Fuse Terminal Blocks	V7-T8-48
Disconnect and Component Terminal Blocks	V7-T8-51
Hybrid Terminal Blocks	V7-T8-54
Mini Spring Cage	V7-T8-56

Single Level—Ground Blocks

Product Description

The XBPT ground blocks are the same shape as the feed-through terminal blocks with the same wide range of cross-sections available. They easily snap onto the DIN rail to make a reliable mechanical and electrical contact that meets all requirements of IEC 60-947-7-2.

Product Selection

XBPT4PE

Spring Cage Connection Single Level—Ground Blocks

Terminal Width	Maximum Wire Size	IEC 60 947-7-2 in V/A/AWG	EN 50 019 in V/A/AWG	UL-cUL Ratings in V/A/AWG	Color	Standard Pack	Catalog Number
5.2 mm	12 AWG/2.5 mm^2	—/—/28–12	—/—/24–12	—/—/26–12	Green/Yellow	50	**XBPT25PE**
6.2 mm	10 AWG/4 mm^2	—/—/28–10	—/—/24–10	—/—/20–10	Green/Yellow	50	**XBPT4PE**
8.2 mm	8 AWG/6 mm^2	—/—/24–8	—/—/20–8	—/—/20–8	Green/Yellow	50	**XBPT6PE**
10.2 mm	6 AWG/10 mm^2	—/65/24–6	—/—/16–6	—/—/16–6	Green/Yellow	50	**XBPT10PE**
12 mm	4 AWG/16 mm^2	—/90/24–4	—/—/16–4	—/—/16–4	Green/Yellow	50	**XBPT16PE**
16 mm	2 AWG/35 mm^2	—/125/14–2	—/—/14–2	—/—/14–2	Green/Yellow	10	**XBPT35PE**

Accessories

Spring Cage Connection Single Level Ground Blocks, XBPT25PE, XBPT4PE and XBPT6PE

Description	Color	Number of Positions	Standard Pack	XBPT25PE Catalog Number	XBPT4PE Catalog Number	XBPT6PE Catalog Number
End cover	Gray	—	50	**XBACPT25**	**XBACPT4**	**XBACPT6**
Blank marker strip external labeling	White	—	10	**XBMZBF5** ①	**XBMZBF6** ①	**XBMZBF8** ①
Blank marker strip center labeling (strip of 10)	White	—	10	**XBMZB5** ①	**XBMZB6** ①	**XBMZB8** ①

Spring Cage Connection Single Level Ground Blocks, XBPT10PE, XBPT16PE and XBPT35PE

8

Description	Color	Number of Positions	Standard Pack	XBPT10PE Catalog Number	XBPT16PE Catalog Number	XBPT35PE Catalog Number
End cover	Gray	—	50	**XBACPT10**	**XBACPT16**	②
Plug-in bridge—for cross connections in the bridge shaft	—	2	10	**XBAFBS210**	**XBAFBS212**	**XBAFBS216**
Blank marker strip external labeling	White	—	10	**XBMZBF10** ①	**XBMZBF12** ①	**XBMZBF15** ①
Blank marker strip center labeling (strip of 10)	White	—	10	**XBMZB10** ①	**XBMZB12** ①	**XBMZB15** ①

Technical Data and Specifications

Spring Cage Connection Single Level Ground Blocks

Description	XBPT25PE	XBPT4PE	XBPT6PE	XBPT10PE	XBPT16PE	XBPT35PE
Technical Data in Accordance with IEC						
Maximum load current in A/cross-section in mm^2	—	—	—	65/16	90/25	125/35
Rated surge voltage in kV/contamination class	8/3	8/3	8/3	8/3	8/3	8/3
Surge voltage category/insulating material group	III/I	III/I	III/I	III/I	III/I	III/I
Connection Capacity						
Stranded with ferrule with plastic sleeve in mm^2	0.25–2.5	0.25–4	0.25–6	0.25–10	0.25–16	2.5–35
Stranded with ferrules without plastic sleeve in mm^2	0.25–2.5	0.25–4	0.25–6	0.25–10	0.25–16	2.5–35
Stranded with twin ferrule with plastic sleeve in mm^2	0.5	0.5–1	0.5–1.5	1.5–2.5	1.5–4	2.5–10
Stripping length in inches (mm)	0.39 (10)	0.39 (10)	0.47 (12)	0.71 (18)	0.71 (18)	0.98 (25)

Dimensions

Approximate Dimensions in Inches (mm)

Spring Cage Connection Single Level Ground Blocks

Catalog Number	Width	Length	Cover Width	Height for— 35 x 7.5 in	35 x 15 in
XBPT25PE	0.20 (5.2)	1.91 (48.5)	0.09 (2.2)	1.45 (36.8)	1.73 (44.0)
XBPT4PE	0.24 (6.2)	2.20 (56.0)	0.09 (2.2)	1.45 (36.8)	1.73 (44.0)
XBPT6PE	0.32 (8.2)	2.74 (69.5)	0.09 (2.2)	1.71 (43.5)	2.01 (51.0)
XBPT10PE	0.39 (10.0)	2.81 (71.5)	0.09 (2.2)	1.99 (50.5)	2.28 (58.0)
XBPT16PE	0.47 (12.0)	3.15 (80.0)	0.09 (2.2)	2.01 (51.0)	2.30 (58.5)
XBPT35PE	0.63 (16.0)	3.94 (100.0)	—	2.32 (59.0)	2.62 (66.5)

Notes

① For information on Printed Marking Tag Options, see **Page V7-T8-98**.

② XBPT35PE has an enclosed design. The use of an end cover is not required.

For additional accessories, see **Page V7-T8-90**.

Multi-Conductor Terminal Blocks

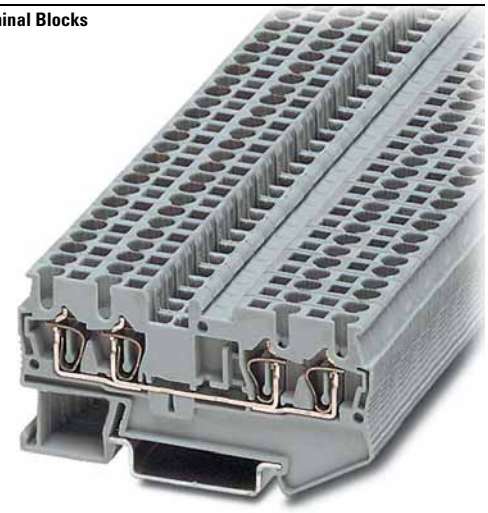

Contents

Description	*Page*
Single Level—Through-Feed	**V7-T8-32**
Single Level—Ground Blocks	**V7-T8-37**
Multi-Conductor Terminal Blocks	
Accessories	**V7-T8-40**
Technical Data and Specifications	**V7-T8-41**
Dimensions	**V7-T8-41**
Multi-Conductor Ground Blocks	**V7-T8-42**
Double Level Blocks	**V7-T8-44**
Triple Level Blocks	**V7-T8-46**
Fuse Terminal Blocks	**V7-T8-48**
Disconnect and Component Terminal Blocks	**V7-T8-51**
Hybrid Terminal Blocks	**V7-T8-54**
Mini Spring Cage	**V7-T8-56**

Multi-Conductor Terminal Blocks

Product Description

The multi-conductor terminal blocks offer a space-saving alternative to standard feed-through terminal blocks, allowing for high-density wiring. Often, three connections have to be led to one terminal block. The XBPT…D12 terminal block accomplishes this without any additional terminal blocks or bridging required. The XBPT…D22 terminal blocks allow four wires to be connected to one potential—and can therefore be used as compact power distributors. There is also a version, XBPT25D22U or XBPT4D22U, with an interrupted bus bar in the terminal center. This makes two feed-through terminal blocks available in one level. One side of this block can be bridged using the standard Plug-in bridges. Double marker carriers are available for clear marking of the feed-through levels.

Product Selection

XBPT4D12

Spring Cage Connection Multi-Conductor Terminal Blocks, Three-Wire

Terminal Width	Maximum Wire Size	IEC 60 947-7-1 in V/A/AWG	EN 50 019 in V/A/AWG	UL-cUL Ratings in V/A/AWG	Color	Standard Pack	Catalog Number
5.2 mm	12 AWG/2.5 mm^2	800/28/28–12	550/25/21/24–12	600/20/26–12	Gray	50	**XBPT25D12**
					Blue	50	**XBPT25D12BU**
6.2 mm	10 AWG/4 mm^2	800/40/28–10	550/34/29/24–10	600/30/20–10	Gray	50	**XBPT4D12**
					Blue	50	**XBPT4D12BU**

XBPT25D22

Spring Cage Connection Multi-Conductor Terminal Blocks, Four-Wire

Terminal Width	Maximum Wire Size	IEC 60 947-7-1 in V/A/AWG	EN 50 019 in V/A/AWG	UL-cUL Ratings in V/A/AWG	Color	Standard Pack	Catalog Number
Spring Cage Multi-Conductor							
5.2 mm	12 AWG/2.5 mm^2	800/28/28–12	550/24/21/24–12	600/20/26–12	Gray	50	**XBPT25D22**
					Blue	50	**XBPT25D22BU**
6.2 mm	10 AWG/4 mm^2	800/40/28–10	550/34/25/24–10	600/30/20–10	Gray	50	**XBPT4D22**
					Blue	50	**XBPT4D22BU**
Spring Cage Multi-Conductor with Interrupted Bus Bar							
5.2 mm	12 AWG/2.5 mm^2	800/28/28–12	550/24/21/24–12	600/20/26–12	Blue	50	**XBPT25D22U**
6.2 mm	10 AWG/4 mm^2	800/40/28–10	550/34/25/24–10	600/30/20–10	Blue	50	**XBPT4D22U**

8

Accessories

Spring Cage Connection Multi-Conductor Terminal Blocks

Description	Color	Number of Positions	Standard Pack	XBPT25D12 Catalog Number	XBPT4D12 Catalog Number	XBPT25D22 Catalog Number	XBPT4D22 Catalog Number
End cover	Gray	—	50	**XBACPT25D12**	**XBACPT4D12**	**XBACPT25D22**	**XBACPT4D22**
End cover segment	Gray	—	10	**XBASPT25**	**XBASPT4**	**XBASPT25**	**XBASPT4**
Partition plate	—	—	50	**XBATPTD12**	**XBATPTD12**	**XBATPTD22**	**XBATPTD22**
Plug-in bridge—for cross connections in the bridge shaft	Red	2	10	**XBAFBS25**	**XBAFBS26**	**XBAFBS25**	**XBAFBS26**
		3	50	**XBAFBS35**	**XBAFBS36**	**XBAFBS35**	**XBAFBS36**
		5	50	**XBAFBS55**	**XBAFBS56**	**XBAFBS55**	**XBAFBS56**
		10	10	**XBAFBS105**	**XBAFBS106**	**XBAFBS105**	**XBAFBS106**
		50	10	**XBAFBS505**	**XBAFBS506**	**XBAFBS505**	**XBAFBS506**
Test adapter	—	—	10	**XBATSPAI4**	**XBATSPAI4**	**XBATSPAI4**	**XBATSPAI4**
2.3 mm diameter test plug	—	—	—	**XBATSMPS-_** ①	**XBATSMPS-_** ①	**XBATSMPS-_** ①	**XBATSMPS-_** ①
Modular test plug	—	—	10	**XBATSPS5**	**XBATSPS6**	**XBATSPS5**	**XBATSPS6**
Blank marker strip external labeling	White	—	10	**XBMZBF5** ②	**XBMZBF6** ②	**XBMZBF5** ②	**XBMZBF6** ②
Blank marker strip center labeling (strip of 10)	White	—	10	**XBMZB5** ②	**XBMZB6** ②	**XBMZB5** ②	**XBMZB6** ②

Notes

① For ordering information, see **Page V7-T8-103**.

② For information on Printed Marking Tag Options, see **Page V7-T8-98**.

For additional accessories, see **Page V7-T8-90**.

Technical Data and Specifications

Spring Cage Connection Multi-Conductor Terminal Blocks

Description	XBPT25D12	XBPT4D12	XBPT25D22	XBPT4D22
Technical Data in Accordance with IEC				
Maximum load current in A/cross-section in mm^2	28/4	40/6	28/4	40/6
Rated surge voltage in kV/contamination class	8/3	8/3	8/3	8/3
Surge voltage category/insulating material group	III/I	III/I	III/I	III/I
Connection Capacity				
Stranded with ferrule with plastic sleeve in mm^2	0.25–2.5	0.25–4	0.25–2.5	0.25–4
Stranded with ferrules without plastic sleeve in mm^2	0.25–2.5	0.25–4	0.25–2.5	0.25–4
Stranded with twin ferrule with plastic sleeve in mm^2	0.5	0.5–1	0.5	0.5–1
Stripping length in inches (mm)	0.39 (10)	0.39 (10)	0.39 (10)	0.39 (10)

Dimensions

Approximate Dimensions in Inches (mm)

Spring Cage Connection Multi-Conductor Terminal Blocks

Catalog Number	Width	Length	Cover Width	Height for— 35 x 7.5 in	35 x 15 in
XBPT25D12	0.20 (5.2)	2.38 (60.5)	0.09 (2.2)	1.44 (36.5)	1.73 (44.0)
XBPT4D12	0.24 (6.2)	2.81 (71.5)	0.09 (2.2)	1.44 (36.5)	1.73 (44.0)
XBPT25D22	0.20 (5.2)	2.83 (72.0)	0.09 (2.2)	1.44 (36.5)	1.73 (44.0)
XBPT4D22	0.24 (6.2)	3.43 (87.0)	0.09 (2.2)	1.44 (36.5)	1.73 (44.0)

Multi-Conductor Terminal Blocks

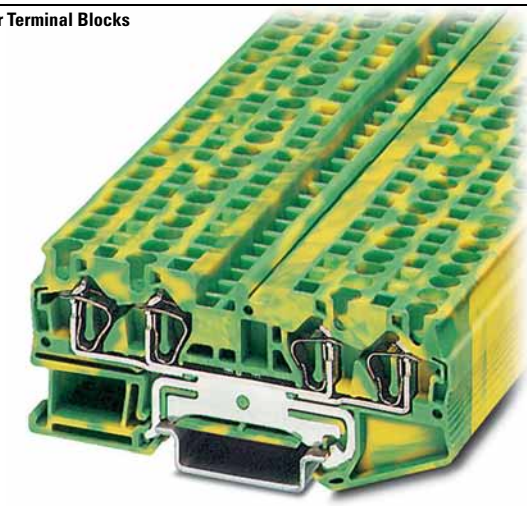

Contents

Description	*Page*
Single Level—Through-Feed	**V7-T8-32**
Single Level—Ground Blocks	**V7-T8-37**
Multi-Conductor Terminal Blocks	**V7-T8-39**
Multi-Conductor Ground Blocks	
Accessories	**V7-T8-43**
Technical Data and Specifications	**V7-T8-43**
Dimensions	**V7-T8-43**
Double Level Blocks	**V7-T8-44**
Triple Level Blocks	**V7-T8-46**
Fuse Terminal Blocks	**V7-T8-48**
Disconnect and Component Terminal Blocks	**V7-T8-51**
Hybrid Terminal Blocks	**V7-T8-54**
Mini Spring Cage	**V7-T8-56**

Multi-Conductor Ground Blocks

Product Description

The ground terminal blocks have the same shape and pitch as the standard terminal block, in a green-yellow housing. They easily snap onto the DIN rail to make a reliable mechanical and electrical contact that meets all requirements of IEC 60-947-7-2.

Product Selection

XBPT25D12PE

Spring Cage Connection Multi-Conductor Ground Blocks, Three-Wire

Terminal Width	Maximum Wire Size	IEC 60 947-7-2 in V/A/AWG	EN 50 019 in V/A/AWG	UL-cUL Ratings in V/A/AWG	Color	Standard Pack	Catalog Number
5.2 mm	12 AWG/2.5 mm^2	—/—/28–12	—/—/24–12	—/—/26–12	Green/Yellow	50	**XBPT25D12PE**
6.2 mm	10 AWG/4 mm^2	—/—/28–10	—/—/24–10	—/—/20–10	Green/Yellow	50	**XBPT4D12PE**

XBPT4D22PE

Spring Cage Connection Multi-Conductor Ground Blocks, Four-Wire

Terminal Width	Maximum Wire Size	IEC 60 947-7-2 in V/A/AWG	EN 50 019 in V/A/AWG	UL-cUL Ratings in V/A/AWG	Color	Standard Pack	Catalog Number
5.2 mm	12 AWG/2.5 mm^2	—/—/28–12	—/—/24–12	—/—/26–12	Green/Yellow	50	**XBPT25D22PE**
6.2 mm	10 AWG/4 mm^2	—/—/28–10	—/—/24–10	—/—/20–10	Green/Yellow	50	**XBPT4D22PE**

Accessories

Spring Cage Connection Multi-Conductor Ground Blocks

Description	Color	Number of Positions	Standard Pack	XBPT25D12PE Catalog Number	XBPT4D12PE Catalog Number	XBPT25D22PE Catalog Number	XBPT4D22PE Catalog Number
End cover	Gray	—	50	**XBACPT25D12**	**XBACPT4D12**	**XBACPT25D22**	**XBACPT4D22**
End cover segment	Gray	—	10	**XBASPT25**	**XBASPT4**	**XBASPT25**	**XBASPT4**
Blank marker strip external labeling	White	—	10	**XBMZBF5** ①	**XBMZBF6** ①	**XBMZBF5** ①	**XBMZBF6** ①
Blank marker strip center labeling (strip of 10)	White	—	10	**XBMZB5** ①	**XBMZB6** ①	**XBMZB5** ①	**XBMZB6** ①

Technical Data and Specifications

Spring Cage Connection Multi-Conductor Ground Blocks

Description	XBPT25D12PE	XBPT4D12PE	XBPT25D22PE	XBPT4D22PE
Technical Data in Accordance with IEC				
Maximum load current in A/cross-section in mm^2	—	—	—	—
Rated surge voltage in kV/contamination class	8/3	8/3	8/3	8/3
Surge voltage category/insulating material group	III/I	III/I	III/I	III/I
Connection Capacity				
Stranded with ferrule with plastic sleeve in mm^2	0.25–2.5	0.25–4	0.25–2.5	0.25–4
Stranded with ferrules without plastic sleeve in mm^2	0.25–2.5	0.25–4	0.25–2.5	0.25–4
Stranded with twin ferrule with plastic sleeve in mm^2	0.5	0.5–1	0.5	0.5–1
Stripping length in inches (mm)	0.39 (10)	0.39 (10)	0.39 (10)	0.39 (10)

Dimensions

Approximate Dimensions in Inches (mm)

Spring Cage Connection Multi-Conductor Ground Blocks

Catalog Number	Width	Length	Cover Width	Height for— 35 x 7.5 in	35 x 15 in
XBPT25D12PE	0.20 (5.2)	2.38 (60.5)	0.09 (2.2)	1.44 (36.5)	1.73 (44.0)
XBPT4D12PE	0.24 (6.2)	2.81 (71.5)	0.09 (2.2)	1.44 (36.5)	1.73 (44.0)
XBPT25D22PE	0.20 (5.2)	2.83 (72.0)	0.09 (2.2)	1.44 (36.5)	1.73 (44.0)
XBPT4D22PE	0.24 (6.2)	3.43 (87.0)	0.09 (2.2)	1.44 (36.5)	1.73 (44.0)

Notes

① For information on Printed Marking Tag Options, see **Page V7-T8-98**.

For additional accessories, see **Page V7-T8-90**.

Double Level Blocks

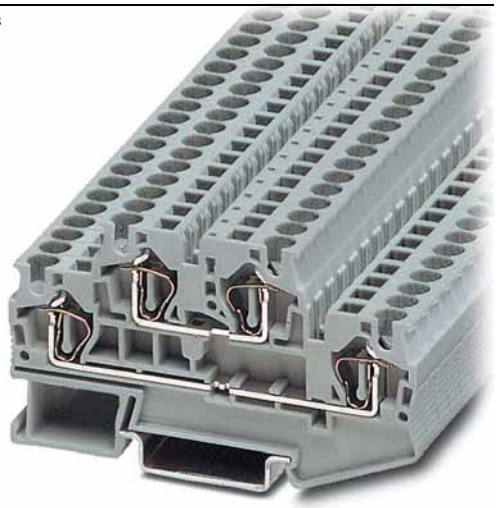

Contents

Description	*Page*
Single Level—Through-Feed	**V7-T8-32**
Single Level—Ground Blocks	**V7-T8-37**
Multi-Conductor Terminal Blocks	**V7-T8-39**
Multi-Conductor Ground Blocks	**V7-T8-42**
Double Level Blocks	
Accessories	**V7-T8-45**
Technical Data and Specifications	**V7-T8-45**
Dimensions	**V7-T8-45**
Triple Level Blocks	**V7-T8-46**
Fuse Terminal Blocks	**V7-T8-48**
Disconnect and Component Terminal Blocks	**V7-T8-51**
Hybrid Terminal Blocks	**V7-T8-54**
Mini Spring Cage	**V7-T8-56**

Double Level Blocks

Product Description

The potentials of the ***XB*** double level terminal blocks routed on two levels reduce space requirements by 50% compared with single level terminal blocks.

The XBPTT blocks can be bridged on both levels with the Plug-in bridge system and labeling options are available for each terminal point, resulting in maximum customization for each application. The XBPTT25PV and XBPTT4PV terminal blocks have two interconnected levels.

Equipotential bonding is marked by an imprint on the housing. These terminal blocks can also be bridged and used to construct compact potential distributor blocks.

Product Selection

XBPTT4

Spring Cage Connection Double Level Blocks

Terminal Width	Maximum Wire Size	IEC 60 947-7-1 in V/A/AWG	EN 50 019 in V/A/AWG	UL-cUL Ratings in V/A/AWG	Color	Standard Pack	Catalog Number
Spring Cage Connection Double Level Blocks							
5.2 mm	12 AWG/2.5 mm^2	500/26/28–12	420/23/19/24–12	600/20/26–12	Gray	50	**XBPTT25**
					Blue	50	**XBPTT25BU**
6.2 mm	10 AWG/4 mm^2	500/32/28–10	420/32/27/24–10	300/30/20–10	Gray	50	**XBPTT4**
					Blue	50	**XBPTT4BU**
Spring Cage Connection Double Level Blocks (terminal block with potential distribution between the levels)							
5.2 mm	12 AWG/2.5 mm^2	500/26/28–12	420/23/19/24–12	600/20/26–12	Gray	50	**XBPTT25PV**
6.2 mm	10 AWG/4 mm^2	500/32/28–10	420/32/27/24–10	300/30/20–10	Gray	50	**XBPTT4PV**

XBPTT25PE

Spring Cage Connection Double Level Ground Blocks

Terminal Width	Maximum Wire Size	IEC 60 947-7-2 in V/A/AWG	EN 50 019 in V/A/AWG	UL-cUL Ratings in V/A/AWG	Color	Standard Pack	Catalog Number
6.2 mm	10 AWG/4 mm^2	—/—/28–10	—/—/24–10	—/—/20–10	Green/Yellow	50	**XBPTT4PE**

Accessories

Spring Cage Connection Double Level Blocks

Description	Color	Number of Positions	Standard Pack	XBPTT25 Catalog Number	XBPTT4 Catalog Number	XBPTT25PE Catalog Number	XBPTT4PE Catalog Number
End cover	Gray	—	50	**XBACPTT25**	**XBACPTT4**	**XBACPTT25**	**XBACPTT4**
Partition plate	—	—	50	**XBATPTT4**	**XBATPTT4**	—	—
Plug-in bridge—for cross connections in the bridge shaft	Red	2	10	**XBAFBS25**	**XBAFBS26**	**XBAFBS25**	**XBAFBS26**
		3	50	**XBAFBS35**	**XBAFBS36**	**XBAFBS35**	**XBAFBS36**
		5	50	**XBAFBS55**	**XBAFBS56**	**XBAFBS55**	**XBAFBS56**
		10	10	**XBAFBS105**	**XBAFBS106**	**XBAFBS105**	**XBAFBS106**
		50	10	**XBAFBS505**	**XBAFBS506**	**XBAFBS505**	**XBAFBS506**
Test adapter	—	—	10	**XBATSPAI4**	**XBATSPAI4**	—	—
Modular test plug	—	—	10	**XBATSPS5**	**XBATSPS6**	—	—
Blank marker strip (strip of 10)	White	—	10	**XBMZBF5** ①	**XBMZBF6** ①	**XBMZBF5** ①	**XBMZBF6** ①

Technical Data and Specifications

Spring Cage Connection Double Level Blocks

Description	XBPTT25	XBPTT4	XBPTT25PE	XBPTT4PE
Technical Data in Accordance with IEC				
Maximum load current in A/cross-section in mm^2	26/4	32/6	—	—
Rated surge voltage in kV/contamination class	6/3	6/3	6/3	6/3
Surge voltage category/insulating material group	III/I	III/I	III/I	III/I
Connection Capacity				
Stranded with ferrule with plastic sleeve in mm^2	0.25–2.5	0.25–4	0.25–2.5	0.25–4
Stranded with ferrules without plastic sleeve in mm^2	0.25–2.5	0.25–4	0.25–2.5	0.25–4
Stranded with twin ferrule with plastic sleeve in mm^2	0.5	0.5–1	0.5	0.5–1
Stripping length in inches (mm)	0.39 (10)	0.39 (10)	0.39 (10)	0.39 (10)

Dimensions

Approximate Dimensions in Inches (mm)

Spring Cage Connection Double Level Blocks

Catalog Number	Width	Length	Cover Width	Height for— 35 x 7.5 in	35 x 15 in
XBPTT25	0.20 (5.2)	2.66 (67.5)	0.09 (2.2)	1.87 (47.5)	2.17 (55.0)
XBPTT4	0.24 (6.2)	3.29 (83.5)	0.09 (2.2)	1.87 (47.5)	2.17 (55.0)
XBPTT25PE	0.20 (5.2)	2.66 (67.5)	0.09 (2.2)	1.87 (47.5)	2.17 (55.0)
XBPTT4PE	0.24 (6.2)	3.29 (83.5)	0.09 (2.2)	1.87 (47.5)	2.17 (55.0)

Notes

① For information on Printed Marking Tag Options, see **Page V7-T8-98**.

For additional accessories, see **Page V7-T8-90**.

Triple Level Blocks

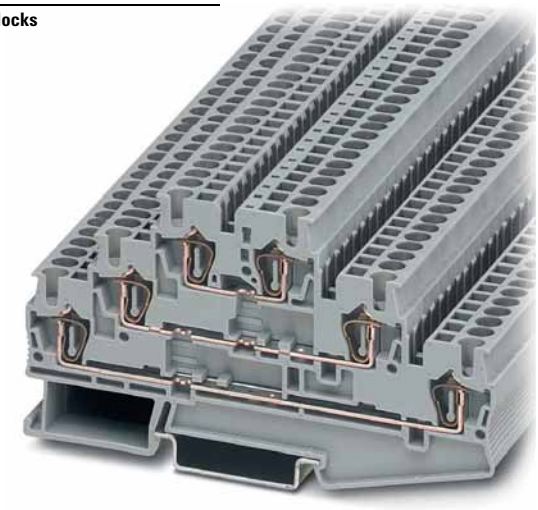

Contents

Description	*Page*
Single Level—Through-Feed	**V7-T8-32**
Single Level—Ground Blocks	**V7-T8-37**
Multi-Conductor Terminal Blocks	**V7-T8-39**
Multi-Conductor Ground Blocks	**V7-T8-42**
Double Level Blocks	**V7-T8-44**
Triple Level Blocks	
Accessories	**V7-T8-47**
Technical Data and Specifications	**V7-T8-47**
Dimensions	**V7-T8-47**
Fuse Terminal Blocks	**V7-T8-48**
Disconnect and Component Terminal Blocks	**V7-T8-51**
Hybrid Terminal Blocks	**V7-T8-54**
Mini Spring Cage	**V7-T8-56**

Triple Level Blocks

Product Description

The spring cage triple level terminal block incorporates three feed-through levels in a 5.2 mm wide housing. This is ideal for high density wiring, especially important when switchgear space is restricted. There is a bridge shaft on each level allowing use of this block as a compact potential distributor or as a sensor terminal.

The XBPTK25PV has all six terminal points interconnected. All the triple level blocks can be labeled on each level.

Product Selection

XBPTK25

Spring Cage Connection Triple Level Blocks

Terminal Width	Maximum Wire Size	IEC 60 947-7-1 in V/A/AWG	UL-cUL Ratings in V/A/AWG	Color	Standard Pack	Catalog Number
5.2 mm	12 AWG/2.5 mm^2	500/28/28–12	600/20/26–12	Gray	50	**XBPTK25**
5.2 mm	12 AWG/2.5 mm^2	500/28/28–12	600/20/26–12	Gray	50	**XBPTK25PV** ①

Note

① Terminal block with potential distribution between the levels.

Accessories

Spring Cage Connection Triple Level Blocks

Description	Color	Number of Positions	Standard Pack	XBPTK25 Catalog Number	XBPTK25PV Catalog Number
End cover	Gray	—	50	**XBACPT25K**	**XBACPT25K**
Plug-in bridge—for cross connections in the bridge shaft	Red	2	10	**XBAFBS25**	**XBAFBS25**
		3	50	**XBAFBS35**	**XBAFBS35**
		5	50	**XBAFBS55**	**XBAFBS55**
		10	10	**XBAFBS105**	**XBAFBS105**
		50	10	**XBAFBS505**	**XBAFBS505**
Test adapter	—	—	10	**XBATSPAI4**	**XBATSPAI4**
Modular test plug	—	—	10	**XBATSPS5**	**XBATSPS5**
Blank marker strip (strip of 10)	White	—	10	**XBMZBF5** ①	**XBMZBF5** ①

8

Technical Data and Specifications

Spring Cage Connection Triple Level Blocks

Description	XBPTK25	XBPTK25PV
Technical Data in Accordance with IEC		
Maximum load current in A/cross-section in mm^2	28/4	28/4
Rated surge voltage in kV/contamination class	6/3	6/3
Surge voltage category/insulating material group	III/I	III/I
Connection Capacity		
Stranded with ferrule with plastic sleeve in mm^2	0.25–2.5	0.25–2.5
Stranded with ferrules without plastic sleeve in mm^2	0.25–2.5	0.25–2.5
Stranded with twin ferrule with plastic sleeve in mm^2	0.5	0.5
Stripping length in inches (mm)	0.39 (10)	0.39 (10)

Dimensions

Approximate Dimensions in Inches (mm)

Spring Cage Connection Triple Level Blocks

Catalog Number	Width	Length	Cover Length	Height for— 35 x 7.5 in	35 x 15 in
XBPTK25	0.20 (5.2)	3.92 (99.5)	0.09 (2.2)	2.28 (58.0)	2.58 (65.5)
XBPTK25PV	0.20 (5.2)	3.92 (99.5)	0.09 (2.2)	2.28 (58.0)	2.58 (65.5)

Notes

① For information on Printed Marking Tag Options, see **Page V7-T8-98**.

For additional accessories, see **Page V7-T8-90**.

Fuse Terminal Blocks

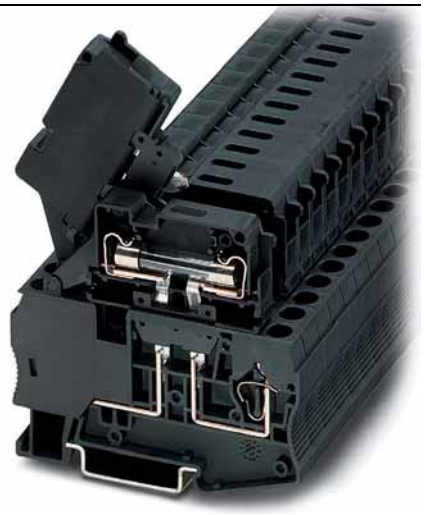

Contents

Description	*Page*
Single Level—Through-Feed	**V7-T8-32**
Single Level—Ground Blocks	**V7-T8-37**
Multi-Conductor Terminal Blocks	**V7-T8-39**
Multi-Conductor Ground Blocks	**V7-T8-42**
Double Level Blocks	**V7-T8-44**
Triple Level Blocks	**V7-T8-46**
Fuse Terminal Blocks	
Accessories	**V7-T8-49**
Technical Data and Specifications	**V7-T8-50**
Dimensions	**V7-T8-50**
Disconnect and Component Terminal Blocks	**V7-T8-51**
Hybrid Terminal Blocks	**V7-T8-54**
Mini Spring Cage	**V7-T8-56**

Fuse Terminal Blocks

Product Description

The spring cage fuse terminal blocks act as a fuse carrier for 5 x 20 mm or 6.3 x 32 mm fuses. They also allow for potential distribution with the double bridge shaft. For signaling a triggered fuse, fuse terminal blocks with light indicators are available (for both AC and DC voltage).

Product Selection

XBPT4FBE

Spring Cage Connection Fuse Terminal Blocks, for 5 x 20 mm Fuse

Terminal Width	Maximum Wire Size	IEC 60 947-7-3 with Fuse in V/A/AWG	IEC 60 947-7-3 as Disconnect Terminal Blocks in V/A/AWG	UL-cUL Ratings in V/A/AWG	Color	Standard Pack	Catalog Number
Fuse Terminal Blocks							
6.2 mm	10 AWG/4 mm²	①/①/28–10	250/6.3/28–10	300/6.3/24–10	Black	50	**XBPT4FBE**
Fuse Terminal Blocks with LED 15–30V, 3.5–8.1A							
6.2 mm	10 AWG/4 mm²	①/①/28–10	250/6.3/28–10	300/6.3/24–10	Black	50	**XBPT4FBEL24**
Fuse Terminal Blocks with LED 30–60V, 0.8–2.0A							
6.2 mm	10 AWG/4 mm²	①/①/28–10	250/6.3/28–10	300/6.3/24–10	Black	50	**XBPT4FBEL60**
Fuse Terminal Blocks with LED 110–250V, 0.5–1.0A							
6.2 mm	10 AWG/4 mm²	①/①/28–10	250/6.3/28–10	300/6.3/24–10	Black	50	**XBPT4FBEL250**

Notes

The cartridge fuse holders should be selected according to the maximum power dissipation (self-heating) of the cartridge fuse inserts. The thermal conditions in closed fuse holes should be checked according to the application and installation.

Higher ambient temperatures are an additional strain on fuse inserts. In applications of this kind, the shift of the rated current should be taken into consideration accordingly.

Maximum power dissipation at 73.4°F (23°C) (in accordance with IEC 60 947-7-3).

When selecting cartridge fuse inserts, please ensure that the maximum power dissipation specified at right is not exceeded. Details can be obtained from the fuse suppliers.

Cartridge Fuse Inserts 5 x 20 and 6.3 x 32 mm in accordance. with IEC 60 947-7-3.

① The current is determined by the fuse used, the voltage by the selected light indicator. See **Page V7-T8-49**.

XBPT4FBN

Spring Cage Connection Fuse Terminal Blocks, for 6.3 x 32 mm (1/4 in x 1–1/4 in) Fuse

Terminal Width	Maximum Wire Size	IEC 60 947-7-3 with Fuse in V/A/AWG	IEC 60 947-7-3 as Disconnect Terminal Blocks in V/A/AWG	UL-cUL Ratings in V/A/AWG	Color	Standard Pack	Catalog Number
Fuse Terminal Blocks							
8.2 mm	10 AWG/4 mm^2	400/10/28–10	400/10/28–10	300/10/24–10	Black	50	**XBPT4FBN**
Fuse Terminal Blocks with LED 12–30V, 1.0–2.5 mA							
8.2 mm	10 AWG/4 mm^2	400/10/28–10	400/10/28–10	300/10/24–10	Black	50	**XBPT4FBNL24**
Fuse Terminal Blocks with LED 110–250V, 0.5–2.5 mA							
8.2 mm	10 AWG/4 mm^2	400/10/28–10	400/10/28–10	300/10/24–10	Black	50	**XBPT4FBNL250**

Accessories

8

Spring Cage Connection Fuse Terminal Blocks

Description	Color	Number of Positions	Standard Pack	XBPT4FBE Catalog Number	XBPT4FBN Catalog Number
Partition plate	—	—	50	**XBATPT4**	**XBATQTD12**
Plug-in bridge—for cross connections in the bridge shaft	Red	2	10	**XBAFBS26**	**XBAFBS28**
		3	50	**XBAFBS36**	—
		5	50	**XBAFBS56**	—
		10	10	**XBAFBS106**	—
Blank marker strip external labeling	White	—	10	**XBMZBF6** ①	**XBMZBF8** ①
Blank marker strip center labeling (strip of 10)	White	—	10	**XBMZB5** ①	**XBMZB6** ①

Notes

The cartridge fuse holders should be selected according to the maximum power dissipation (self-heating) of the cartridge fuse inserts. The thermal conditions in closed fuse holes should be checked according to the application and installation.

Higher ambient temperatures are an additional strain on fuse inserts. In applications of this kind, the shift of the rated current should be taken into consideration accordingly.

Maximum power dissipation at 73.4°F (23°C) (in accordance with IEC 60 947-7-3).

When selecting cartridge fuse inserts, please ensure that the maximum power dissipation specified at right is not exceeded. Details can be obtained from the fuse suppliers.

Cartridge Fuse Inserts 5 x 20 and 6.3 x 32 mm in accordance. with IEC 60 947-7-3.

① For information on Printed Marking Tag Options, see **Page V7-T8-98**.

For additional accessories, see **Page V7-T8-90**.

Technical Data and Specifications

Overload and Short-Circuit Protection

Terminal Blocks	U (V)	Overload Protection Individual	Overload Protection Interconnected	Short-Circuit Protection Only Individual	Short-Circuit Protection Only Interconnected	$I_{max.}$ (A)
XBPT4FBN	400	1.6W	1.6W	4W	2.5W	10.0
XBPT4FBE	250	1.6W	1.6W	4W	2.5W	6.3

Spring Cage Connection Fuse Terminal Blocks

Description	XBPT4FBE	XBPT4FBN
Technical Data in Accordance with IEC		
Fuse type/dimensions in mm^2	G/5 x 20	G/6.3 x 32
Maximum current with single arrangement in A	6.3	10
Maximum Power Dissipation		
At 73.4°F (23°C) in accordance with IEC 60 947-7-3 in W	①	①
Rated surge voltage in kV/contamination class	4/3	6/3
Surge voltage category/insulating material group	III/I	III/I
Connection Capacity		
Stranded with ferrule/with ferrule and plastic sleeve in mm^2	0.25–4/0.25–4	0.25–4/0.25–4
Stranded with twin ferrule and plastic sleeve in mm^2	0.5	0.5
Stripping length in inches (mm)	0.39 (10)	0.39 (10)

8

Dimensions

Approximate Dimensions in Inches (mm)

Spring Cage Connection Fuse Terminal Blocks

Catalog Number	Width	Length	Height for— 35 x 7.5 in	Height for— 35 x 15 in
XBPT4FBE	0.24 (6.2)	2.42 (61.5)	2.46 (62.5)	2.76 (70.0)
XBPT4FBN	0.32 (8.2)	3.01 (76.5)	2.72 (69.0)	3.01 (76.5)

Note

① The current is determined by the fuse used, the voltage by the selected light indicator. See **Page V7-T8-49**.

Disconnect and Component Terminal Blocks

Contents

Description	*Page*
Single Level—Through-Feed	**V7-T8-32**
Single Level—Ground Blocks	**V7-T8-37**
Multi-Conductor Terminal Blocks	**V7-T8-39**
Multi-Conductor Ground Blocks	**V7-T8-42**
Double Level Blocks	**V7-T8-44**
Triple Level Blocks	**V7-T8-46**
Fuse Terminal Blocks	**V7-T8-48**
Disconnect and Component Terminal Blocks	
Accessories	**V7-T8-52**
Technical Data and Specifications	**V7-T8-53**
Dimensions	**V7-T8-53**
Hybrid Terminal Blocks	**V7-T8-54**
Mini Spring Cage	**V7-T8-56**

Disconnect and Component Terminal Blocks

Product Description

The XBPT knife disconnect terminal blocks feature narrow construction and high current carrying capacity. They also have a test connection parallel to the disconnect point for a 2.3 mm diameter test plug. Potential distribution is easily accomplished with the Plug-in bridges. There are front connection spring cage terminal blocks available for multi-conductor connections in the smallest possible space. The XBPT4TG disconnect terminal block accommodates component plugs for resistors, diodes, or capacitors, and fuse plugs with or without indication.

Product Selection

XBPT25MT
Knife Disconnect

Disconnect and Component Terminal Blocks

Terminal Width	Maximum Wire Size	IEC 60 947-7-1 in V/A/AWG	UL-cUL Ratings in V/A/AWG	Color	Standard Pack	Catalog Number
Single Level Knife Disconnect						
5.2 mm	12 AWG/2.5 mm^2	400/16/28–12	600/16/26–12	Gray	50	**XBPT25MT**
6.2 mm	10 AWG/4 mm^2	400/16/28–10	300/6.3/24–10	Gray	50	**XBPT4MT**
Three-Wire Knife Disconnect						
5.2 mm	12 AWG/2.5 mm^2	400/16/28–12	600/16/26–12	Gray	50	**XBPT25D12MT**
Four-Wire Knife Disconnect						
5.2 mm	12 AWG/2.5 mm^2	400/16/28–12	600/16/26–12	Gray	50	**XBPT25D22MT**
Spring Cage Disconnect/Component Plug						
6.2 mm	10 AWG/4 mm^2	400/16/28–10	300/6.3/24–10	Gray	50	**XBPT4TG**
Component Plug						
6.2 mm	10 AWG/4 mm^2	400/16/28–10	300/6.3/24–10	Gray	10	**XBPCO**
Fuse Plug						
6.2 mm	10 AWG/4 mm^2	400/16/28–10	300/6.3/24–10	Black	10	**XBPFU**
Fuse Plug with Light Indicator for 12–30V, 1–2.5 mA						
6.2 mm	10 AWG/4 mm^2	400/16/28–10	300/6.3/24–10	Black	10	**XBPFUL24**
Fuse Plug with Light Indicator for 110–250V, 0.5–2.5 mA						
6.2 mm	10 AWG/4 mm^2	400/16/28–10	300/6.3/24–10	Black	10	**XBPFUL250**

Accessories

Spring Cage Connection Disconnect and Component Terminal Blocks

Description	Color	Number of Positions	Standard Pack	XBPT25MT Catalog Number	XBPT25D12MT Catalog Number	XBPT25D22MT Catalog Number	XBPT4MT Catalog Number	XBPT4TG Catalog Number
End cover	Gray	—	50	**XBACPT25D12**	**XBACPT25D22**	**XBACPT25D22MT**	③	③
End cover segment	Gray	—	50	**—**	**XBACPT25**	**XBACPT25**	**—**	**—**
Partition plate	—	—	50	**XBATPTD12**	**XBATPTD22**	**—**	**XBATPT4**	**XBATPT4**
Plug-in bridge—for cross connections in the terminal center	Red	2	10	**XBAFBS25**	**XBAFBS25**	**XBAFBS25**	**XBAFBS26**	**XBAFBS26**
		3	50	**XBAFBS35**	**XBAFBS35**	**XBAFBS35**	**XBAFBS36**	**XBAFBS36**
		5	50	**XBAFBS55**	**XBAFBS55**	**XBAFBS55**	**XBAFBS56**	**XBAFBS56**
		10	10	**XBAFBS105**	**XBAFBS105**	**XBAFBS105**	**XBAFBS106**	**XBAFBS106**
		50	10	**XBAFBS505**	**XBAFBS505**	**XBAFBS505**	**XBAFBS506**	**XBAFBS506**
Test adapter	—	—	10	**XBATSPAI4**	**XBATSPAI4**	**XBATSPAI4**	**XBATSPAI4**	**XBATSPAI4**
2.3 mm diameter test plug	—	—	—	**XBATSMPS-_** ①	**XBATSMPS-_** ①	**XBATSMPS-_** ①	**XBATSMPS-_** ①	**XBATSMPS-_** ①
Modular test plug	—	—	10	**XBATSPS5**	**XBATSPS5**	**XBATSPS5**	**XBATSPS6**	**XBATSPS6**
Blank marker strip external labeling	White	—	10	**XBMZBF5** ②	**XBMZBF5** ②	**XBMZBF5** ②	**XBMZBF6** ②	**XBMZBF6** ②
Blank marker strip center labeling (strip of 10)	White	—	10	**XBMZB5** ②	**XBMZB5** ②	**XBMZB5** ②	**XBMZB6** ②	**XBMZB6** ②

Notes

① For ordering information, see **Page V7-T8-103**.

② For information on Printed Marking Tag Options, see **Page V7-T8-98**.

③ XBPT4MT and XBPT4TG have an enclosed design. The use of an end cover is not required.

For additional accessories, see **Page V7-T8-90**.

Technical Data and Specifications

Spring Cage Connection Disconnect and Component Terminal Blocks, XBPT25MT, XBPT25D12MT and XBPT25D22MT

Description	XBPT25MT	XBPT25D12MT	XBPT25D22MT
Technical Data in Accordance with IEC			
Maximum load current in A/cross-section in mm^2	16/4	16/4	16/4
Rated surge voltage in kV/contamination class	6/3	6/3	6/3
Surge voltage category/insulating material group	III/I	III/I	III/I
Connection Capacity			
Stranded with ferrule with plastic sleeve in mm^2	0.25–2.5	0.25–2.5	0.25–2.5
Stranded with ferrules without plastic sleeve in mm^2	0.25–2.5	0.25–2.5	0.25–2.5
Stranded with twin ferrule with plastic sleeve in mm^2	0.5	0.5	0.5
Stripping length in inches (mm)	0.39 (10)	0.39 (10)	0.39 (10)

Spring Cage Connection Disconnect and Component Terminal Blocks, XBPT25D12MT and XBPT4TG

Description	XBPT4MT	XBPT4TG
Technical Data in Accordance with IEC		
Maximum load current in A/cross-section in mm^2	16/6	16/6
Rated surge voltage in kV/contamination class	6/3	6/3
Surge voltage category/insulating material group	III/I	III/I
Connection Capacity		
Stranded with ferrule with plastic sleeve in mm^2	0.25–4	0.25–4
Stranded with ferrules without plastic sleeve in mm^2	0.25–4	0.25–4
Stranded with twin ferrule with plastic sleeve in mm^2	0.5	0.5
Stripping length in inches (mm)	0.39 (10)	0.39 (10)

Dimensions

Approximate Dimensions in Inches (mm)

Spring Cage Connection Disconnect and Component Terminal Blocks

Catalog Number	Width	Length	Cover Length	Height for— 35 x 7.5 in	35 x 15 in
XBPT25MT	0.20 (5.2)	2.38 (60.5)	0.09 (2.2)	1.44 (36.5)	1.73 (44.0)
XBPT25D12MT	0.20 (5.2)	2.83 (72.0)	0.09 (2.2)	1.44 (36.5)	1.73 (44.0)
XBPT25D22MT	0.20 (5.2)	3.31 (84.0)	0.09 (2.2)	1.44 (36.5)	1.73 (44.0)
XBPT4MT	0.24 (6.2)	2.42 (61.5)	—	1.44 (36.5)	1.73 (44.0)
XBPT4TG	0.24 (6.2)	2.42 (61.5)	—	1.44 (36.5)	1.73 (44.0)

Hybrid Terminal Blocks

Contents

Description	*Page*
Single Level—Through-Feed	**V7-T8-32**
Single Level—Ground Blocks	**V7-T8-37**
Multi-Conductor Terminal Blocks	**V7-T8-39**
Multi-Conductor Ground Blocks	**V7-T8-42**
Double Level Blocks	**V7-T8-44**
Triple Level Blocks	**V7-T8-46**
Fuse Terminal Blocks	**V7-T8-48**
Disconnect and Component Terminal Blocks	**V7-T8-51**
Hybrid Terminal Blocks	
Accessories	**V7-T8-55**
Technical Data and Specifications	**V7-T8-55**
Dimensions	**V7-T8-55**
Mini Spring Cage	**V7-T8-56**

8

Hybrid Terminal Blocks

Product Description

The XBPU spring cage hybrid terminal blocks offer the best of both worlds. One side offers a spring cage connection and the other side offers the universal screw connection. Use the spring cage connection on the internal (factory) control cabinet side and the screw connection on the end customer (field) side. Ground terminal blocks of the same shape are also available.

Product Selection

XBPU25D12

Spring Cage Hybrid Terminal Blocks

		IEC 60 947-7-1 with …		IEC 60 947-7-2 with …		UL-cUL Ratings with …				
Terminal Width	**Maximum Wire Size**	**Spring in V/A/AWG**	**Screw in V/A/AWG**	**Spring in V/A/AWG**	**Screw in V/A/AWG**	**Spring in V/A/AWG**	**Screw in V/A/AWG**	**Color**	**Std. Pack**	**Catalog Number**
5.2 mm	12 AWG/ 2.5 mm^2	800/28/28–12	800/28/26–14	—	—	600/15/28–12	600/15/26–12	Gray	50	**XBPU25D12**

XBPU25D12PE

Spring Cage Hybrid Ground Blocks

		IEC 60 947-7-1 with …		IEC 60 947-7-2 with …		UL-cUL Ratings with …				
Terminal Width	**Maximum Wire Size**	**Spring in V/A/AWG**	**Screw in V/A/AWG**	**Spring in V/A/AWG**	**Screw in V/A/AWG**	**Spring in V/A/AWG**	**Screw in V/A/AWG**	**Color**	**Std. Pack**	**Catalog Number**
5.2 mm	12 AWG/ 2.5 mm^2	—	—	—/—/28–12	—/—/26–14	—/—/28–12	—/—/28–12	Green/ Yellow	50	**XBPU25D12PE**

Accessories

Spring Cage Hybrid Terminal/Ground Blocks

Description	Color	Number of Positions	Standard Pack	XBPU25D12 Catalog Number	XBPU25D12PE Catalog Number
End cover	Gray	—	50	**XBACPU25D12**	**XBACPU25D12**
Plug-in bridge—for cross connections in the terminal center	Red	2	10	**XBAFBS25**	**XBAFBS25**
		3	50	**XBAFBS35**	**XBAFBS35**
		5	50	**XBAFBS55**	**XBAFBS55**
		10	10	**XBAFBS105**	**XBAFBS105**
		50	10	**XBAFBS505**	**XBAFBS505**
Test adapter	—	—	10	**XBATSPAI4**	—
2.3 mm diameter test plug	—	—	—	**XBATSMPS-_** ①	—
Modular test plug	—	—	10	**XBATSPS5**	—
Blank marker strip external labeling	White	—	10	**XBMZBF5** ②	**XBMZBF5** ②
Blank marker strip center labeling (strip of 10)	White	—	10	**XBMZB5** ②	**XBMZB5** ②

Technical Data and Specifications

Spring Cage Hybrid Blocks

Description	XBPU25D12	XBPU25D12PE
Technical Data in Accordance with IEC		
Maximum load current in A/cross-section in mm^2	28/4	—
Rated surge voltage in kV/contamination class	8/3	8/3
Surge voltage category/insulating material group	III/I	III/I
Connection Capacity		
Stranded with ferrule with plastic sleeve in mm^2	0.25–2.5	0.25–2.5
Stranded with ferrules without plastic sleeve in mm^2	0.25–2.5	0.25–2.5
Stranded with twin ferrule with plastic sleeve in mm^2	0.5–1	0.5–1
Stripping length in inches (mm)	0.39 (10)	0.39 (10)

Dimensions

Approximate Dimensions in Inches (mm)

Spring Cage Hybrid Blocks

Catalog Number	Width	Length	Cover Length	Height for— 35 x 7.5 in	35 x 15 in
XBPU25D12	0.20 (5.2)	2.57 (65.3)	0.09 (2.2)	1.69 (42.8)	1.98 (50.3)
XBPU25D12PE	0.20 (5.2)	2.57 (65.3)	0.09 (2.2)	1.69 (42.8)	1.98 (50.3)

Notes

① For ordering information, see **Page V7-T8-103**.

② For information on Printed Marking Tag Options, see **Page V7-T8-98**.

For additional accessories, see **Page V7-T8-90**.

Mini Spring Cage

Contents

Description	*Page*
Single Level—Through-Feed	**V7-T8-5**
Single Level—Ground Blocks	**V7-T8-10**
Multi-Conductor Terminal Blocks	**V7-T8-12**
Multi-Conductor Ground Blocks	**V7-T8-14**
Double Level	**V7-T8-16**
Triple Level Sensor/Actuator	**V7-T8-18**
Fuse Terminal Blocks	**V7-T8-21**
Disconnect and Component Terminal Blocks	**V7-T8-24**
High Current Blocks	**V7-T8-27**
Mini Spring Cage	
Accessories	**V7-T8-57**
Technical Data and Specifications	**V7-T8-57**
Dimensions	**V7-T8-57**

Mini Spring Cage

Product Description

The ***XB*** miniature terminal blocks have a connection cross-section from 1.5 mm^2 through 4 mm^2 and mount on 15 mm DIN rail. There is an opening for bridging with a fixed bridge in the center of the terminal blocks. These miniature terminal blocks also offer the same accessories that you would find with the larger blocks—including marking tags, end covers, end stop and ground blocks.

Product Selection

XBMPK15

Mini Spring Cage Terminal Blocks

Terminal Width	Maximum Wire Size	IEC 60 947-7-1 in V/A/AWG	IEC 60 947-7-2 in V/A/AWG	UL-cUL Ratings in V/A/AWG	Color	Standard Pack	Catalog Number
5.2 mm	14 AWG/1.5 mm^2	800/24/26–14	—	600/15/26–14	Gray	50	**XBMPK15**
					Blue	50	**XBMPK15BU**

XBMPK15PE

Mini Spring Cage Ground Blocks

Terminal Width	Maximum Wire Size	IEC 60 947-7-1 in V/A/AWG	IEC 60 947-7-2 in V/A/AWG	UL-cUL Ratings in V/A/AWG	Color	Standard Pack	Catalog Number
5.2 mm	14 AWG/1.5 mm^2	—	—/—/26–14	—/—/26–14	Green/ Yellow	50	**XBMPK15PE**

XBMPKK15

Mini Spring Cage Terminal Blocks—Double Level

Terminal Width	Maximum Wire Size	IEC 60 947-7-1 in V/A/AWG	UL-cUL Ratings in V/A/AWG	Color	Standard Pack	Catalog Number
5.2 mm	14 AWG/1.5 mm^2	500/20/26–14	600/15/26–14	Gray	50	**XBMPKK15**

Accessories

Mini Spring Cage Terminal/Ground Blocks

Description	Color	Number of Positions	Standard Pack	XBMPK15 Catalog Number	XBMPK15PE Catalog Number	XBMPKK15 Catalog Number
End cover	Gray	—	10	**XBACMPK15**	**XBACMPK15**	**XBACMPKK15**
Fixed bridge	—	2	10	**XBAFBR25N**	—	**XBAFBR25N**
Separating plate	—	—	10	**XBATMPKK15**	—	**XBATMPKK15**
Blank marker strip	White	—	10	**XBMZBF5** ①	**XBMZBF5** ①	**XBMZBF5** ①

Technical Data and Specifications

Mini Spring Cage Terminal/Ground Blocks

Description	XBMPK15	XBMPK15PE	XBMPKK15
Technical Data in Accordance with IEC			
Maximum load current in A/cross-section in mm^2	24/2.5	—	20/2.5
Rated surge voltage in kV/contamination class	8/3	8/3	6/3
Surge voltage category/insulating material group	III/I	III/I	III/I
Connection Cross-Section			
Stranded with ferrule with plastic sleeve in mm^2	0.25–1.5	0.25–1.5	0.25–1.5
Stranded with ferrule without plastic sleeve in mm^2	0.25–1.5	0.25–1.5	0.25–1.5
Stranded with twin ferrule with plastic sleeve in mm^2	—	—	—
Stripping length in Inches (mm)	0.35 (9)	0.35 (9)	0.35 (9)

Dimensions

Approximate Dimensions in Inches (mm)

Mini Spring Cage Terminal/Ground Blocks

Catalog Number	Width	Length	Cover Length	Height for— 15 x 5.5 in	35 x 7.5 in	35 x 15 in
XBMPK15	0.20 (5.2)	1.57 (40.0)	0.04 (1.1)	1.36 (34.5)	—	—
XBMPK15PE	0.20 (5.2)	1.57 (40.0)	0.04 (1.1)	1.36 (34.5)	—	—
XBMPKK15	0.20 (5.2)	3.35 (85.0)	0.04 (1.1)	1.65 (42.0)	1.67 (42.5)	1.97 (50.0)

Notes

① For information on Printed Marking Tag Options, see **Page V7-T8-98**.

For additional accessories, see **Page V7-T8-90**.

Pluggable Spring Cage Terminal Blocks

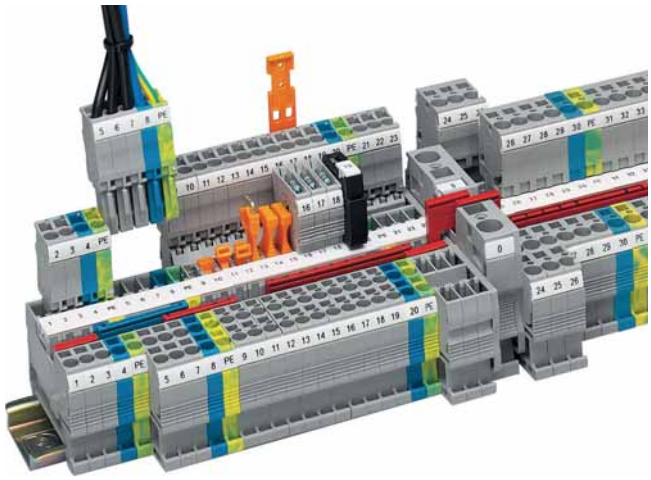

Contents

Description	*Page*
Pluggable Spring Cage Terminal Blocks	
Connection Terminal Blocks	**V7-T8-59**
Connection Plugs	**V7-T8-62**
Connection Receptacles	**V7-T8-64**
Connection Accessories	**V7-T8-66**

Drawings Online

Pluggable Spring Cage Terminal Blocks Overview

Product Description

The pluggable spring cage connection terminal blocks allow signal and power wiring to be made pluggable. This complete pluggable system has a spring that provides maximum connection space in a space-saving design. The pluggable system accommodates stranded conductors with a nominal cross-section of 2.5 mm^2, with or without ferrules.

Application Description

For applications requiring pluggable wiring up to a rated current of 32A and a rated voltage of 800V. The integrated overspring meets the most stringent vibration requirements. Also ideal where safety is a concern and flexibility is required. The basic terminal blocks and the plugs are finger-safe, which also means the supply voltage can be input via either the terminal blocks or the plugs. With the XBAPSC receptacles, plug-in contacts can be accommodated safely in cable ducts and distributor shafts using minimal space. A test hole can accommodate a 2.3 mm diameter test plug in each receptacle, providing a practical solution. The XBAPSP plugs are intended for connecting one wire, while the XBAPSPDB plugs are designed to connect two wires and provide an optional bridge.

Features

- Space-saving design
- Powerful contact
- Finger-safe

Pluggability

Standards and Certifications

- UL recognized—File No. E67464
- CE approved
- LVD ①:
  - EN 60947-7-1
  - EN 60947-7-2
  - EN 60998-2-3
  - EN 60352-4/A1

Note

① Not all standards apply to all terminal blocks. Contact Eaton for details.

Connection Terminal Blocks

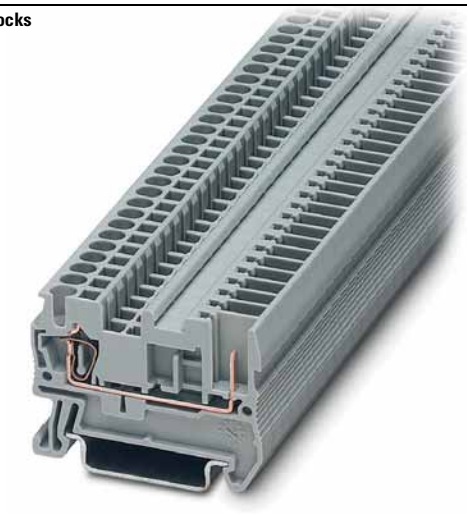

Contents

Description	*Page*
Connection Terminal Blocks	
Accessories	**V7-T8-60**
Technical Data and Specifications	**V7-T8-60**
Dimensions	**V7-T8-61**
Connection Plugs	**V7-T8-62**
Connection Receptacles	**V7-T8-64**
Connection Accessories	**V7-T8-66**

Connection Terminal Blocks

Product Description

Contact to the DIN rail is made by simply snapping the terminal block onto the rail.

These blocks act as the stationary position of the pluggable terminal blocks.

Product Selection

XBPT25P

Pluggable Spring Cage Connection Terminal Blocks

Terminal Width	Maximum Wire Size	IEC 61 984 in V/A/AWG	UL-cUL Ratings in V/A/AWG	Color	Standard Pack	Catalog Number
Single Level						
5.2 mm	12 AWG/2.5 mm^2	500/24/28–12	300/20/26–12	Gray	50	**XBPT25P**
Three-Wire						
5.2 mm	12 AWG/2.5 mm^2	500/24/28–12	300/20/26–12	Gray	50	**XBPT25PD12**

Accessories

Pluggable Spring Cage Connection Terminal Blocks

Description	Color	Number of Positions	Standard Pack	XBPT25P Catalog Number	XBPT25PD12 Catalog Number
End cover	Gray	—	50	**XBACPT25**	**XBACPT25D12**
End cover segment	Gray	—	10	—	**XBASPT25**
Partition plate	—	—	50	**XBATPT4**	**XBATPTD12**
Plug-in bridge—for cross connections in the terminal center	Red	2	10	**XBAFBS25**	**XBAFBS25**
		3	50	**XBAFBS35**	**XBAFBS35**
		5	50	**XBAFBS55**	**XBAFBS55**
		10	10	**XBAFBS105**	**XBAFBS105**
		50	10	**XBAFBS505**	**XBAFBS505**
Test adapter	—	—	10	**XBATSPAI4**	**XBATSPAI4**
2.3 mm diameter test plug	—	—	—	**XBATSMPS-_** ①	**XBATSMPS-_** ①
Modular test plug	—	—	10	**XBATSPS5**	**XBATSPS5**
Blank marker strip external labeling	White	—	10	**XBMZBF5** ②	**XBMZBF5** ②
Blank marker strip center labeling (strip of 10)	White	—	10	**XBMZB5** ②	**XBMZB5** ②

Technical Data and Specifications

Pluggable Spring Cage Connection Terminal Blocks

Description	XBPT25P	XBPT25PD12
Technical Data in Accordance with IEC		
Maximum load current in A/cross-section in mm^2	24/4	24/4
Rated surge voltage in kV/contamination class	6/3	6/3
Surge voltage category/insulating material group	III/I	III/I
Connection Capacity		
Stranded with ferrule with plastic sleeve in mm^2	0.25–2.5	0.25–2.5
Stranded with ferrules without plastic sleeve in mm^2	0.25–2.5	0.25–2.5
Stranded with twin ferrule with plastic sleeve in mm^2	0.5	0.5
Stripping length in inches (mm)	0.39 (10)	0.39 (10)

Derating Curve for Pluggable Terminal Blocks

XBPT25P and XBPT25PD12

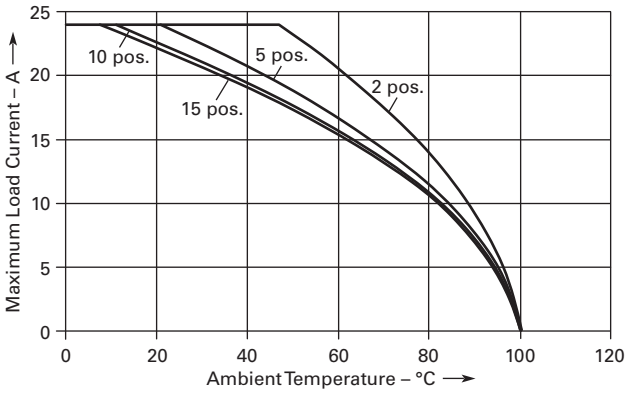

Notes

① For ordering information, see **Page V7-T8-103**.

② For information on Printed Marking Tag Options, see **Page V7-T8-98**.

For additional accessories, see **Page V7-T8-90**.

Dimensions

Approximate Dimensions in Inches (mm)

Pluggable Spring Cage Connection Terminal Blocks—Without Plug

Catalog Number	Width	Length	Cover Length	Height for— 35 x 7.5 in	35 x 15 in
XBPT25P	0.20 (5.2)	1.91 (48.5)	0.09 (2.2)	1.44 (36.5)	1.73 (44.0)
XBPT25PD12	0.20 (5.2)	2.38 (60.5)	0.09 (2.2)	1.44 (36.5)	1.73 (44.0)

XBPT25P

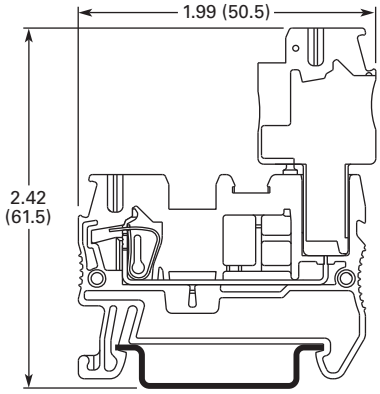

XBPT25PD12

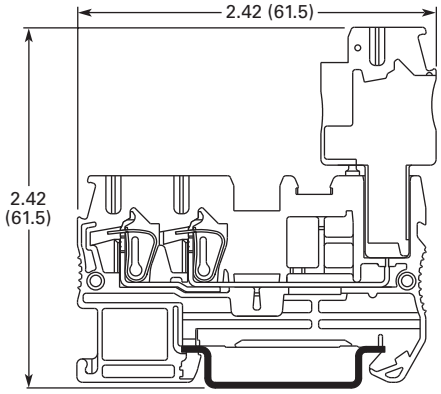

Connection Plugs

Contents

Description	*Page*
Connection Terminal Blocks	**V7-T8-59**
Connection Plugs	
Accessories	**V7-T8-63**
Technical Data and Specifications	**V7-T8-63**
Dimensions	**V7-T8-63**
Connection Receptacles	**V7-T8-64**
Connection Accessories	**V7-T8-66**

Connection Plugs

Product Description

Just like the basic terminal blocks, the plugs also offer the perfect solution for every application. The XBAPSP25_ plugs are designed for connecting one conductor. The XBAPSPDB25_ plug is designed for connecting two conductors and provides an additional bridging option.

Product Selection

XBAPSP25_

Spring Cage Connection Plugs, Single, Not Bridgeable

Terminal Width	Maximum Wire Size	Connection Data in V/A/AWG	UL-cUL Ratings in V/A/AWG	Color	Number of Positions	Standard Pack	Catalog Number
5.2 mm	12 AWG/2.5 mm^2	500/24/28–12	300/20/26–12	Gray	1	25	**XBAPSP251**
					2	25	**XBAPSP252**
					3	25	**XBAPSP253**
					4	25	**XBAPSP254**
					5	25	**XBAPSP255**
					6	25	**XBAPSP256**
					7	25	**XBAPSP257**
					8	25	**XBAPSP258**
					9	25	**XBAPSP259**
					10	25	**XBAPSP2510**
					11	10	**XBAPSP2511**
					12	10	**XBAPSP2512**

XBAPSPDB25_

Spring Cage Connection Plugs, Double, Bridgeable

Terminal Width	Maximum Wire Size	Connection Data in V/A/AWG	UL-cUL Ratings in V/A/AWG	Color	Number of Positions	Standard Pack	Catalog Number
5.2 mm	12 AWG/2.5 mm^2	500/24/28–12	300/20/26–12	Gray	1	25	**XBAPSPDB251**
					2	25	**XBAPSPDB252**
					3	25	**XBAPSPDB253**
					4	25	**XBAPSPDB254**
					5	25	**XBAPSPDB255**
					6	25	**XBAPSPDB256**
					7	25	**XBAPSPDB257**
					8	25	**XBAPSPDB258**
					9	25	**XBAPSPDB259**
					10	25	**XBAPSPDB2510**
					11	10	**XBAPSPDB2511**
					12	10	**XBAPSPDB2512**

Accessories

Spring Cage Connection Plugs

Description	Color	Number of Positions	Standard Pack	XBAPSP25_ Catalog Number	XBAPSPDB25_ Catalog Number
Plug-in bridge—for cross connections in the terminal center	Red	2	10	—	**XBAFBS25**
		3	50	—	**XBAFBS35**
		5	50	—	**XBAFBS55**
		10	10	—	**XBAFBS105**
Snap-lock fitting and strain relief	Orange	2	10	**XBAPPRZ**	**XBAPPRZ**
Snap-lock fitting	Orange	1	50	**XBAPPR**	**XBAPPR**
	Orange	2	50	**XBAPPR2**	**XBAPPR2**
Strain relief	Black	2	10	**XBAPPZ2**	**XBAPPDZ2**
	Black	4	10	**XBAPPZ4**	**XBAPPDZ4**
Blank marker strip	White	—	10	**XBMZBF5** ①	**XBMZBF5** ①

Technical Data and Specifications

Spring Cage Connection Plugs

Description	XBAPSP25_	XBAPSPDB25_
Technical Data in Accordance with IEC		
Maximum load current in A/cross-section in mm^2	24/4	24/4
Rated surge voltage in kV/contamination class	6/3	6/3
Surge voltage category/insulating material group	III/I	III/I
Connection Capacity		
Stranded with ferrule with plastic sleeve in mm^2	0.25–2.5	0.25–2.5
Stranded with ferrules without plastic sleeve in mm^2	0.25–2.5	0.25–2.5
Stranded with twin ferrule with plastic sleeve in mm^2	0.5	0.5
Stripping length in inches (mm)	0.39 (10)	0.39 (10)

Dimensions

See **Page V7-T8-61** for dimensions.

Notes

① For information on Printed Marking Tag Options, see **Page V7-T8-98**.

For additional accessories, see **Page V7-T8-90**.

Connection Receptacles

Contents

Description	*Page*
Connection Terminal Blocks	**V7-T8-59**
Connection Plugs	**V7-T8-62**
Connection Receptacles	
Accessories	**V7-T8-65**
Technical Data and Specifications	**V7-T8-65**
Dimensions	**V7-T8-65**
Connection Accessories	**V7-T8-66**

Connection Receptacles

Product Description

With the XBAPSC25_, Plug-in contacts can be accommodated safely in cable ducts and distributor shafts without using much space. The standard strain reliefs can also be used. Large-surface labeling makes it possible to mark the terminal points and the entire receptacle. A test hole can accommodate a 2.3 mm diameter test plug in each receptacle element, providing a practical solution.

Product Selection

XBAPSC25_

Pluggable Spring Connection Receptacles

Terminal Width	Maximum Wire Size	Connection Data in V/A/AWG	UL-cUL Ratings in V/A/AWG	Color	Number of Positions	Standard Pack	Catalog Number
5.2 mm	12 AWG/2.5 mm^2	500/24/28–12	300/20/26–12	Gray	2	25	**XBAPSC252**
					3	25	**XBAPSC253**
					4	25	**XBAPSC254**
					5	25	**XBAPSC255**
					6	25	**XBAPSC256**
					7	25	**XBAPSC257**
					8	25	**XBAPSC258**
					9	25	**XBAPSC259**
					10	25	**XBAPSC2510**
					11	10	**XBAPSC2511**
					12	10	**XBAPSC2512**

Accessories

Pluggable Spring Connection Receptacles

Description	Color	Number of Positions	Standard Pack	XBAPSC25_ Catalog Number
2.3 mm diameter test plug	Red	—	—	**XBATSMPS-_** ①
Strain relief	Black	2	10	**XBAPPDZ2**
	Black	4	10	**XBAPPDZ4**
Blank marker strip	White	—	10	**XBMZBF5** ②

Technical Data and Specifications

Spring Cage Connection Plugs

Description	XBAPSP25_
Technical Data in Accordance with IEC	
Maximum load current in A/cross-section in mm^2	24/4
Rated surge voltage in kV/contamination class	6/3
Surge voltage category/insulating material group	III/I
Connection Capacity	
Stranded with ferrule with plastic sleeve in mm^2	0.25–2.5
Stranded with ferrules without plastic sleeve in mm^2	0.25–2.5
Stranded with twin ferrule with plastic sleeve in mm^2	0.5
Stripping length in inches (mm)	0.39 (10)

Dimensions

Approximate Dimensions in Inches (mm)

Spring Cage Connection Plugs

Catalog Number	Width	Length	Cover Length	Height
XBAPSP25_	0.20 (5.2)	1.46 (37.2)	0.09 (2.2)	0.71 (18.0)

Receptacle Widths

Catalog Number	Width	Catalog Number	Width
XBAPSC252	0.41 (10.4)	**XBAPSC258**	1.64 (41.6)
XBAPSC253	0.61 (15.6)	**XBAPSC259**	1.84 (46.8)
XBAPSC254	0.82 (20.8)	**XBAPSC2510**	2.05 (52.0)
XBAPSC255	1.02 (26.0)	**XBAPSC2511**	2.25 (57.2)
XBAPSC256	1.23 (31.2)	**XBAPSC2512**	2.46 (62.4)
XBAPSC257	1.43 (36.4)		

Notes

① For ordering information, see **Page V7-T8-103**.

② For information on Printed Marking Tag Options, see **Page V7-T8-98**.

For additional accessories, see **Page V7-T8-90**.

Connection Accessories

Product Description

The pluggable XBPT series features an extensive range of application-oriented accessories. Strain reliefs are available for the plugs and can be snapped on at the required points as an option. The snap-lock fitting can be used for all plug variants. It is snapped into the outside of the plug housing as an option and hooks onto the terminal block housing when the plug is snapped on.

Product Selection

Pluggable Spring Cage Connection Accessories

	Description	Number of Positions	Standard Pack	Catalog Number
XBAPPZ2	Strain relief for single plugs	2	10	**XBAPPZ2**
		4	50	**XBAPPZ4**
XBAPPDZ4	Strain relief for double plugs and receptacles	2	10	**XBAPPDZ2**
		4	10	**XBAPPDZ4**
XBAPPR2	Snap-lock fitting for plugs	1	50	**XBAPPR**
		2	50	**XBAPPR2**
XBAPPRZ	Snap-lock fitting and strain relief for plugs	2	10	**XBAPPRZ**

Strain Relief

Snap-Lock Fitting

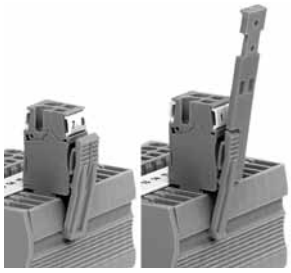

Optional Accessory Recommendations

Number of Positions Receptacle	Strain Relief
2–4	**XBAPPZ2**
5–10	**XBAPPZ4 or (2) XBAPPZ2**
11–15	**(2) XBAPPZ4 or (4) XBAPPZ2**

IDC Terminal Blocks

Contents

Description	*Page*
IDC Terminal Blocks	
Single Level	**V7-T8-68**
Multi-Conductor	**V7-T8-70**
Double Level	**V7-T8-73**
Fuse Terminal Blocks	**V7-T8-75**
Disconnect and Component Terminal Blocks	**V7-T8-77**
Hybrid Terminal Blocks	**V7-T8-79**

Drawings Online

IDC (Insulation Displacement Connection) Terminal Blocks Overview

Product Description

The superior design of Eaton's Insulation Displacement Connection (IDC) technology terminal blocks reduces wiring installation time and labor, especially in high-volume applications. IDC terminal blocks are suited for applications in automated equipment and machine tools, packaging and material handling machinery, railway/mass transit systems, petro-chemical, and any other application requiring high-volume connections for low-voltage control and signal circuitry where labor cost reduction and ease of assembly is desired. These terminal blocks are designed for long-term use under demanding conditions.

The XBQT Series allows for wire to be connected without any prior stripping. The quick connection provides up to 60% reduction in wiring time. One turn of a standard screwdriver results in a simple, fast and reliable connection.

Application Description

The XBQT is operated with a standard screwdriver. The switching states are clearly signaled by engagement points in the start and end positions. Solid and stranded wires of 0.25 to 2.5 mm^2 can be wired without the use of ferrules. Stripping the wire is not required—the wire's insulation is cut open when it is properly connected. The wire is securely placed in the end position where it makes large-area, gas-tight contact. Connections are made in seconds!

Features

- Quick connection capability
- Global acceptance
- Flexible plug-in bridge system
- Large surface area for marking
- Standardized testing system

Standards and Certifications

- UL recognized—File No. E67464
- CE approved
- LVD ①
  - EN 60947-7-1
  - EN 60947-7-2
  - EN 60998-2-3
  - EN 60352-4/A1

Note

① Not all standards apply to all terminal blocks. Contact Eaton for details.

Single Level

Contents

Description	*Page*
Single Level	
Accessories	**V7-T8-69**
Technical Data and Specifications	**V7-T8-69**
Dimensions	**V7-T8-69**
Multi-Conductor	**V7-T8-70**
Double Level	**V7-T8-73**
Fuse Terminal Blocks	**V7-T8-75**
Disconnect and Component Terminal Blocks	**V7-T8-77**
Hybrid Terminal Blocks	**V7-T8-79**

Single Level

Product Description

The XBQT IDC terminal block has the fastest connection time in a compact design. The space-saving front connection design offers additional space for wiring between the cable ducts. The double bridge shaft can accommodate individual chain bridging and step-down bridging from other terminal blocks. The XBQT ground blocks are the same shape as the feed-through terminal blocks with the same wide range of cross-sections available. They easily snap onto the DIN rail to make a reliable mechanical and electrical contact that meets all requirements of IEC 60-947-7-2.

Product Selection

XBQT25

IDC—Single Level Terminal Blocks

Terminal Width	Maximum Wire Size	Connection Data in V/A/AWG	EN 50 019 in V/A/AWG	UL-cUL Ratings in V/A/AWG	Color	Standard Pack	Catalog Number
5.2 mm	16 AWG/1.5 mm^2	800/17.5/24–16	550/16/24–16	600/10/24–16	Gray	50	**XBQT15**
					Blue	50	**XBQT15BU**
6.2 mm	14 AWG/2.5 mm^2	800/24/20–14	—	600/15/20–14	Gray	50	**XBQT25**
					Blue	50	**XBQT25BU**

XBQT15PE

IDC—Single Level Terminal Ground Blocks

Terminal Width	Maximum Wire Size	Connection Data in V/A/AWG	EN 50 019 in V/A/AWG	UL-cUL Ratings in V/A/AWG	Color	Standard Pack	Catalog Number
5.2 mm	16 AWG/1.5 mm^2	—/—/24–16	—/—/24–16	—/—/24–16	Green/Yellow	50	**XBQT15PE**
6.2 mm	14 AWG/2.5 mm^2	—/—/20–14	—	—/—/20–14	Green/Yellow	50	**XBQT25PE**

Accessories

IDC—Single Level Terminal/Ground Blocks

Description	Color	Number of Positions	Standard Pack	XBQT15 Catalog Number	XBQT25 Catalog Number	XBQT15PE Catalog Number	XBQT25PE Catalog Number
End cover	Gray	—	50	**XBACQT15**	**XBACQT25**	**XBACQT15**	**XBACQT25**
Partition plate	—	—	50	**XBATQT25**	**XBATQT25**	**XBATQT25**	**XBATQT25**
Plug-in bridge	Red	2	10	**XBAFBS25**	**XBAFBS26**	**XBAFBS25**	**XBAFBS26**
		3	50	**XBAFBS35**	**XBAFBS36**	**XBAFBS35**	**XBAFBS36**
		5	50	**XBAFBS55**	**XBAFBS56**	**XBAFBS55**	**XBAFBS56**
		10	10	**XBAFBS105**	**XBAFBS106**	**XBAFBS105**	**XBAFBS106**
		50	10	**XBAFBS505**	**XBAFBS506**	**XBAFBS505**	**XBAFBS506**
Test adapter	—	—	10	**XBATSPAI4**	**XBATSPAI4**	**XBATSPAI4**	**XBATSPAI4**
2.3 mm diameter test plug	—	—	—	**XBATSMPS-_** ①	**XBATSMPS-_** ①	**XBATSMPS-_** ①	**XBATSMPS-_** ①
Modular test plug	—	—	10	**XBATSPS5**	**XBATSPS6**	**XBATSPS5**	**XBATSPS6**
Blank marker strip center and external marking	White	—	10	**XBMZBF5** ②	**XBMZBF6** ②	**XBMZBF5** ②	**XBMZBF6** ②
Blank marker strip center labeling (strip of 10)	White	—	10	**XBMZB5** ②	**XBMZB6** ②	**XBMZB5** ②	**XBMZB6** ②

Technical Data and Specifications

IDC—Single Level Terminal/Ground Blocks

Description	XBQT15	XBQT25	XBQT15PE	XBQT25PE
Technical Data in Accordance with IEC				
Maximum load current in A/cross-section in mm^2	17.5/1.5	24/2.5	—	—
Rated surge voltage in kV/contamination class	8/3	8/3	8/3	8/3
Surge voltage category/insulating material group	III/I	III/I	III/I	III/I
Connection Cross-Section				
Core insulation	PVC/PE	PVC/PE	PVC/PE	PVC/PE
Single/multiple/fine strand in mm^2	1.5	2.5	1.5	2.5
Halogen-free in mm^2	1.5	2.5	1.5	2.5
Fine strand/superfine strand in AWG (mm^2)	24–16 (0.25–0.34)	20–14 (—)	24–16 (0.25–0.34)	20–14 (—)
Repeated connections minimum 100 x in mm^2	0.25–1.5	0.5–2.5	0.25–1.5	0.5–2.5

Dimensions

Approximate Dimensions in Inches (mm)

IDC—Single Level Terminal/Ground Blocks

Catalog Number	Width	Length	Cover Length	Height for— 35 x 7.5 in	35 x 15 in
XBQT15	0.20 (5.2)	2.31 (58.8)	0.09 (2.2)	1.55 (39.3)	1.84 (46.8)
XBQT25	0.24 (6.2)	2.46 (62.6)	0.09 (2.2)	1.55 (39.3)	1.84 (46.8)
XBQT15PE	0.20 (5.2)	2.31 (58.8)	0.09 (2.2)	1.55 (39.3)	1.84 (46.8)
XBQT25PE	0.24 (6.2)	2.46 (62.6)	0.09 (2.2)	1.55 (39.3)	1.84 (46.8)

Notes

① For ordering information, see **Page V7-T8-103**.

② For information on Printed Marking Tag Options, see **Page V7-T8-98**.

For additional accessories, see **Page V7-T8-90**.

Multi-Conductor

Contents

Description	*Page*
Single Level	**V7-T8-68**
Multi-Conductor	
Accessories	**V7-T8-71**
Technical Data and Specifications	**V7-T8-72**
Dimensions	**V7-T8-72**
Double Level	**V7-T8-73**
Fuse Terminal Blocks	**V7-T8-75**
Disconnect and Component Terminal Blocks	**V7-T8-77**
Hybrid Terminal Blocks	**V7-T8-79**

Multi-Conductor

Product Description

The XBQT IDC terminal block has the fastest connection time in a compact design. The space-saving front connection design offers additional space for wiring between the cable ducts. The double bridge shaft can accommodate individual chain bridging and step-down bridging from other terminal blocks. The XBQT ground blocks are the same shape as the feed-through terminal blocks with the same wide range of cross-sections available. They easily snap onto the DIN rail to make a reliable mechanical and electrical contact that meets all requirements of IEC 60-947-7-2.

Product Selection

XBQT25D12

IDC—Multi-Conductor Terminal Blocks, Three-Wire

Terminal Width	Maximum Wire Size	Connection Data in V/A/AWG	EN 50 019 in V/A/AWG	UL-cUL Ratings in V/A/AWG	Color	Standard Pack	Catalog Number
5.2 mm	16 AWG/1.5 mm^2	800/17.5/24–16	550/16/24–16	600/10/24–16	Gray	50	**XBQT15D12**
					Blue	50	**XBQT15D12BU**
6.2 mm	14 AWG/2.5 mm^2	800/24/20–14	—	600/15/20–14	Gray	50	**XBQT25D12**
					Blue	50	**XBQT25D12BU**

XBQT15D22PE

IDC—Multi-Conductor Terminal Blocks, Four-Wire

Terminal Width	Maximum Wire Size	Connection Data in V/A/AWG	EN 50 019 in V/A/AWG	UL-cUL Ratings in V/A/AWG	Color	Standard Pack	Catalog Number
5.2 mm	16 AWG/1.5 mm^2	800/17.5/24–16	550/16/24–16	600/10/24–16	Gray	50	**XBQT15D22**
					Blue	50	**XBQT15D22BU**

IDC—Multi-Conductor Terminal Blocks, Four-Wire Ground Blocks

Terminal Width	Maximum Wire Size	Connection Data in V/A/AWG	EN 50 019 in V/A/AWG	UL-cUL Ratings in V/A/AWG	Color	Standard Pack	Catalog Number
5.2 mm	16 AWG/1.5 mm^2	—/—/24–16	—/—/24–16	—/—/24–16	Green/Yellow	50	**XBQT15D22PE**

XBQT15D12PE

IDC—Multi-Conductor Terminal Blocks, Three-Wire Ground Blocks

Terminal Width	Maximum Wire Size	Connection Data in V/A/AWG	EN 50 019 in V/A/AWG	UL-cUL Ratings in V/A/AWG	Color	Standard Pack	Catalog Number
5.2 mm	16 AWG/1.5 mm²	—/—/24–16	—/—/24–16	—/—/24–16	Green/Yellow	50	**XBQT15D12PE**
6.2 mm	14 AWG/2.5 mm²	—/—/20–14	—	—/—/20–14	Green/Yellow	50	**XBQT25D12PE**

Accessories

IDC—Multi-Conductor Terminal Blocks

Description	Color	Number of Positions	Standard Pack	XBQT15D12 Catalog Number	XBQT25D12 Catalog Number	XBQT15D22 Catalog Number
End cover	Gray	—	50	**XBACQT15D12**	**XBACQT25D12**	**XBACQT15D22**
End cover segment	Gray	—	10	**XBASQT15**	**XBASQT25**	**XBASQT15**
Partition plate	—	—	50	**XBATQTD12**	**XBATQTD12**	**XBATQTD22**
Plug-in bridge—for cross connections in the terminal center	Red	2	10	**XBAFBS25**	**XBAFBS26**	**XBAFBS25**
		3	50	**XBAFBS35**	**XBAFBS36**	**XBAFBS35**
		5	50	**XBAFBS55**	**XBAFBS56**	**XBAFBS55**
		10	10	**XBAFBS105**	**XBAFBS106**	**XBAFBS105**
		50	10	**XBAFBS505**	**XBAFBS506**	**XBAFBS505**
Test adapter	—	—	10	**XBATSPAI4**	**XBATSPAI4**	**XBATSPAI4**
2.3 mm diameter test plug	—	—	—	**XBATSMPS-_** ①	**XBATSMPS-_** ①	**XBATSMPS-_** ①
Modular test plug	—	—	10	**XBATSPS5**	**XBATSPS6**	**XBATSPS5**
Blank marker strip center and external marking	White	—	10	**XBMZBF5** ②	**XBMZBF6** ②	**XBMZBF5** ②
Blank marker strip center labeling (strip of 10)	White	—	10	**XBMZB5** ②	**XBMZB6** ②	**XBMZB5** ②

IDC—Multi-Conductor Terminal/Ground Blocks

Description	Color	Number of Positions	Standard Pack	XBQT15D12PE Catalog Number	XBQT25D12PE Catalog Number	XBQT15D22PE Catalog Number
End cover	Gray	—	50	**XBACQT15D12**	**XBACQT25D12**	**XBACQT15D22**
End cover segment	Gray	—	10	**XBASQT15**	**XBASQT25**	**XBASQT15**
Partition plate	—	—	50	**XBATQTD12**	**XBATQTD12**	**XBATQTD22**
Plug-in bridge—for cross connections in the terminal center	Red	2	10	**XBAFBS25**	**XBAFBS26**	**XBAFBS25**
		3	50	**XBAFBS35**	**XBAFBS36**	**XBAFBS35**
		5	50	**XBAFBS55**	**XBAFBS56**	**XBAFBS55**
		10	10	**XBAFBS105**	**XBAFBS106**	**XBAFBS105**
		50	10	**XBAFBS505**	**XBAFBS506**	**XBAFBS505**
Test adapter	—	—	10	**XBATSPAI4**	**XBATSPAI4**	**XBATSPAI4**
2.3 mm diameter test plug	—	—	—	**XBATSMPS-_** ①	**XBATSMPS-_** ①	**XBATSMPS-_** ①
Modular test plug	—	—	10	**XBATSPS5**	**XBATSPS6**	**XBATSPS5**
Blank marker strip center and external marking	White	—	10	**XBMZBF5** ②	**XBMZBF6** ②	**XBMZBF5** ②
Blank marker strip center labeling (strip of 10)	White	—	10	**XBMZB5** ②	**XBMZB6** ②	**XBMZB5** ②

Notes

① For ordering information, see **Page V7-T8-103**.

② For information on Printed Marking Tag Options, see **Page V7-T8-98**.

For additional accessories, see **Page V7-T8-90**.

Technical Data and Specifications

IDC—Multi-Conductor Terminal Blocks

Description	XBQT15D12	XBQT25D12	XBQT15D12PE	XBQT25D12PE	XBQT15D22	XBQT15D22PE
Technical Data in Accordance with IEC						
Maximum load current in A/cross-section in mm^2	17.5/1.5	24/2.5	—	—	17.5/1.5	—
Rated surge voltage in kV/contamination class	8/3	8/3	8/3	8/3	8/3	8/3
Surge voltage category/insulating material group	III/I	III/I	III/I	III/I	III/I	III/I
Connection Cross-Section						
Core insulation	PVC/PE	PVC/PE	PVC/PE	PVC/PE	PVC/PE	PVC/PE
Single/multiple/fine strand in mm^2	1.5	2.5	1.5	2.5	1.5	1.5
Halogen-free in mm^2	1.5	2.5	1.5	2.5	1.5	1.5
Fine strand/superfine strand in AWG (mm^2)	24–16 (0.25–0.34)	20–14 (—)	24–16 (0.25–0.34)	20–14 (—)	24–16 (0.25–0.34)	24–16 (0.25–0.34)
Repeated connections minimum 100 x in mm^2	0.25–1.5	0.5–2.5	0.25–1.5	0.5–2.5	0.25–1.5	0.25–1.5

Dimensions

Approximate Dimensions in Inches (mm)

IDC—Multi-Conductor Terminal Blocks

Catalog Number	Width	Length	Cover Length	Height for— 35 x 7.5 in	35 x 15 in
XBQT15D12	0.20 (5.2)	3.01 (76.4)	0.09 (2.2)	1.55 (39.3)	1.84 (46.8)
XBQT25D12	0.24 (6.2)	3.25 (82.5)	0.09 (2.2)	1.69 (42.8)	1.98 (50.3)
XBQT15D12PE	0.20 (5.2)	3.01 (76.4)	0.09 (2.2)	1.55 (39.3)	1.84 (46.8)
XBQT25D12PE	0.20 (5.2)	3.25 (82.5)	0.09 (2.2)	1.69 (42.8)	1.98 (50.3)
XBQT15D22	0.20 (5.2)	3.70 (94.0)	0.09 (2.2)	1.55 (39.3)	1.84 (46.8)
XBQT15D22PE	0.20 (5.2)	3.70 (94.0)	0.09 (2.2)	1.55 (39.3)	1.84 (46.8)

Double Level

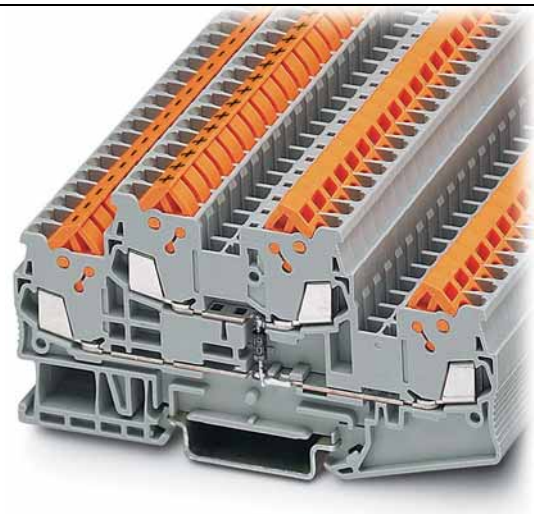

Contents

Description	*Page*
Single Level	**V7-T8-68**
Multi-Conductor	**V7-T8-70**
Double Level	
Accessories	**V7-T8-74**
Technical Data and Specifications	**V7-T8-74**
Dimensions	**V7-T8-74**
Fuse Terminal Blocks	**V7-T8-75**
Disconnect and Component Terminal Blocks	**V7-T8-77**
Hybrid Terminal Blocks	**V7-T8-79**

Double Level

Product Description

The XBQTT IDC terminal block has the fastest connection time in a compact design. The space-saving front connection design offers additional space for wiring between the cable ducts. The double bridge shaft, found in each level, can accommodate individual chain bridging and step-down bridging from other terminal blocks. The XBQTT ground blocks are the same shape as the feed-through terminal blocks with the same wide range of cross-sections available. They easily snap onto the DIN rail to make a reliable mechanical and electrical contact that meets all requirements of IEC 60-947-7-2.

Product Selection

XBQTT15

IDC—Double Level Terminal Blocks

Terminal Width	Maximum Wire Size	Connection Data in V/A/AWG	EN 50 019 in V/A/AWG	UL-cUL Ratings in V/A/AWG	Color	Standard Pack	Catalog Number
5.2 mm	16 AWG/1.5 mm^2	800/17.5/24–16	420/15/24–16	600/10/24–16	Gray	50	**XBQTT15**
					Blue	50	**XBQTT15BU**

XBQTT15PE

IDC—Double Level Ground Blocks

Terminal Width	Maximum Wire Size	Connection Data in V/A/AWG	EN 50 019 in V/A/AWG	UL-cUL Ratings in V/A/AWG	Color	Standard Pack	Catalog Number
6.2 mm	14 AWG/2.5 mm^2	—/—/24–16	—/—/24–16	—/—/24–16	Green/Yellow	50	**XBQTT15PE**

Accessories

IDC—Double Level Terminal/Ground Blocks

Description	Color	Number of Positions	Standard Pack	XBQTT15 Catalog Number	XBQTT15PE Catalog Number
End cover	Gray	—	50	**XBACQTT15**	**XBACQTT15**
Partition plate	—	—	50	**XBATQTT15**	**XBATQTT15**
Plug-in bridge—for cross connections in the terminal center	Red	2	10	**XBAFBS25**	**XBAFBS25**
		3	50	**XBAFBS35**	**XBAFBS35**
		5	50	**XBAFBS55**	**XBAFBS55**
		10	10	**XBAFBS105**	**XBAFBS105**
		20	10	**XBAFBS505**	**XBAFBS505**
Test adapter	—	—	10	**XBATSPAI4**	**XBATSPAI4**
2.3 mm diameter test plug	—	—	—	**XBATSMPS-_** ①	**XBATSMPS-_** ①
Modular test plug	—	—	10	**XBATSPS5**	**XBATSPS5**
Blank marker strip	White	—	10	**XBMZBF5** ②	**XBMZBF5** ②

8

Technical Data and Specifications

IDC—Double Level Terminal/Ground Blocks

Description	XBQTT15	XBQTT15PE
Technical Data in Accordance with IEC		
Maximum load current in A/cross-section in mm^2	17.5/1.5	—
Rated surge voltage in kV/contamination class	6/3	6/3
Surge voltage category/insulating material group	III/I	III/I
Connection Cross-Section		
Core insulation	PVC/PE	PVC/PE
Single/multiple/fine strand in mm^2	1.5	1.5
Halogen-free in mm^2	1.5	1.5
Fine strand/superfine strand in AWG (mm^2)	24–16 (0.25–0.34)	24–16 (0.25–0.34)
Repeated connections minimum 100 x in mm^2	0.25–1.5	0.25–1.5

Dimensions

Approximate Dimensions in Inches (mm)

IDC—Double Level Terminal/Ground Blocks

Catalog Number	Width	Length	Cover Length	Height for— 35 x 7.5 in	35 x 15 in
XBQTT15	0.20 (5.2)	3.92 (99.6)	0.09 (2.2)	1.96 (49.9)	2.26 (57.4)
XBQTT15PE	0.20 (5.2)	3.92 (99.6)	0.09 (2.2)	1.96 (49.9)	2.26 (57.4)

Notes

① For ordering information, see **Page V7-T8-103**.

② For information on Printed Marking Tag Options, see **Page V7-T8-98**.

For additional accessories, see **Page V7-T8-90**.

Fuse Terminal Blocks

Contents

Description	*Page*
Single Level	**V7-T8-68**
Multi-Conductor	**V7-T8-70**
Double Level	**V7-T8-73**
Fuse Terminal Blocks	
Accessories	**V7-T8-76**
Technical Data and Specifications	**V7-T8-76**
Dimensions	**V7-T8-76**
Disconnect and Component Terminal Blocks	**V7-T8-77**
Hybrid Terminal Blocks	**V7-T8-79**

Fuse Terminal Blocks

Product Description

The XBQT lever-type fuse terminal blocks perform two main functions. It is a carrier for a 5 x 20 mm cartridge fuse insert and can also allow for potential distribution via the double bridge shaft.

This means that two potentials can be carried separately alongside each other. Versions with light indication (AC and DC voltage) are available to signal a triggered fuse.

Product Selection

XBQT25FB

IDC—Fuse Terminal Blocks

Terminal Width	Maximum Wire Size	Connection Data in V/A/AWG	UL-cUL Ratings in V/A/AWG	Color	Standard Pack	Catalog Number
IDC Fuse Terminal Blocks						
6.2 mm	14 AWG/2.5 mm²	①/6.3/20–14	300/15/20–14	Black	50	**XBQT25FBE**
IDC Fuse Terminal Blocks with LED 12–30V, 1–2.5 mA						
6.2 mm	14 AWG/2.5 mm²	①/6.3/20–14	300/15/20–14	Black	50	**XBQT25FBEL24**
IDC Fuse Terminal Blocks with LED 30–60V, 0.8–2.0 mA						
6.2 mm	14 AWG/2.5 mm²	①/6.3/20–14	300/15/20–14	Black	50	**XBQT25FBEL60**
IDC Fuse Terminal Blocks with LED 110–250V, 0.5–2.5 mA						
6.2 mm	14 AWG/2.5 mm²	①/6.3/20–14	300/15/20–14	Black	50	**XBQT25FBEL250**

Note

① As disconnect terminal block, 400V; as fuse terminal blocks 250V.

Accessories

IDC—Fuse Terminal Blocks

Description	Color	Number of Positions	Standard Pack	XBQT25FBE Catalog Number
End cover	Gray	—	50	**XBACQT25D12**
Partition plate	—	—	50	**XBATQTD12**
Plug-in bridge—for cross connections in the terminal center	Red	2	10	**XBAFBS26**
		3	50	**XBAFBS36**
		5	50	**XBAFBS56**
		10	10	**XBAFBS106**
Test adapter	—	—	10	**XBATSPAI4**
2.3 mm diameter test plug	—	—	—	**XBATSMPS-_** ①
Modular test plug	—	—	10	**XBATSPS5**
Blank marker strip center and external marking	White	—	10	**XBMZBF6** ②
Blank marker strip lever labeling	White	—	10	**XBMZB5** ②
Blank marker strip center labeling (strip of 10)	White	—	10	**XBMZB6** ②

8

Technical Data and Specifications

IDC—Fuse Terminal Blocks

Description	XBQT25FBE
Technical Data in Accordance with IEC	
Maximum load current in A/cross-section in mm^2	6.3/2.5
Rated surge voltage in kV/contamination class	4/3
Surge voltage category/insulating material group	III/I
Connection Cross-Section	
Core insulation	PVC/PE
Single/multiple/fine strand in mm^2	2.5
Halogen-free in mm^2	2.5
Fine strand/superfine strand in AWG (mm^2)	24–14 (—)
Repeated connections minimum 100 x in mm^2	0.5–2.5

Dimensions

Approximate Dimensions in Inches (mm)

IDC—Fuse Terminal Blocks

Catalog Number	Width	Length	Cover Length	Height for— 35 x 7.5 in	35 x 15 in
XBQT25FBE	0.24 (6.2)	3.25 (82.5)	0.09 (2.2)	1.69 (42.8)	1.98 (50.3)

Notes

① For ordering information, see **Page V7-T8-103**.

② For information on Printed Marking Tag Options, see **Page V7-T8-98**.

For additional accessories, see **Page V7-T8-90**.

Disconnect and Component Terminal Blocks

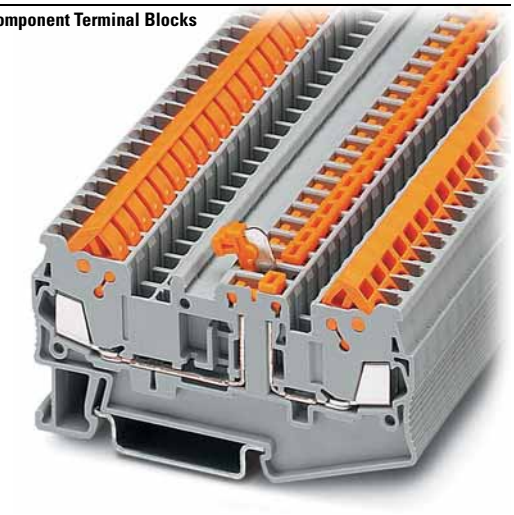

Contents

Description	*Page*
Single Level	**V7-T8-68**
Multi-Conductor	**V7-T8-70**
Double Level	**V7-T8-73**
Fuse Terminal Blocks	**V7-T8-75**
Disconnect and Component Terminal Blocks	
Accessories	**V7-T8-78**
Technical Data and Specifications	**V7-T8-78**
Dimensions	**V7-T8-78**
Hybrid Terminal Blocks	**V7-T8-79**

Disconnect and Component Terminal Blocks

Product Description

The ***XB*** Series includes application specific terminal blocks like disconnect blocks. The knife disconnect terminal blocks (XBQT15MT) has a fitted knife. The XBQT15TG can accommodate component plugs for resistors or capacitors and fuse plugs for 5 x 20 mm fuses with or without a light indicator for signaling a triggered fuse.

Both terminal blocks have three bridge shafts—two in the standard positions and one on the other side of the disconnect point.

Product Selection

XBQT15MT
Knife Disconnect

IDC—Disconnect and Component Terminal Blocks

Terminal Width	Maximum Wire Size	Connection Data in V/A/AWG	UL-cUL Ratings in V/A/AWG	UL-cUL Ratings for Disconnect in V/A/AWG	UL-cUL Ratings for Disconnect with Test Sockets in V/A/AWG	Color	Standard Pack	Catalog Number
Knife Disconnect								
5.2 mm	16 AWG/1.5 mm^2	400/16/24–16	600/10/24–16	—	—	Gray	50	**XBQT15MT**
Component Disconnect								
5.2 mm	16 AWG/1.5 mm^2	400/16/24–16	600/10/24–16	—	—	Gray	50	**XBQT15TG**
6.2 mm	14 AWG/2.5 mm^2	400/16/20–14	300/10/20–14	—	—	Gray	50	**XBQT25TG**
Component Plug								
6.2 mm	10 AWG/4 mm^2	500/16/26–10	—	600/16/26–10	300/16/26–10	Gray	10	**XBPCO**
Fuse Plug								
6.2 mm	10 AWG/4 mm^2	500/16/26–10	—	600/16/26–10	300/16/26–10	Black	10	**XBPFU**
Fuse Plug with Light Indicator for 12–30V, 1–2.5 mA								
6.2 mm	10 AWG/4 mm^2	500/16/26–10	—	600/16/26–10	300/16/26–10	Black	10	**XBPFUL24**
Fuse Plug with Light Indicator for 110–250V, 0.5–2.5 mA								
6.2 mm	10 AWG/4 mm^2	500/16/26–10	—	600/16/26–10	300/16/26–10	Black	10	**XBPFUL250**

Accessories

IDC—Disconnect and Component Terminal Blocks

Description	Color	Number of Positions	Standard Pack	XBQT15MT Catalog Number	XBQT15TG Catalog Number	XBQT25TG Catalog Number
End cover	Gray	—	50	**XBACQT15D12**	**XBACQT15D12**	**XBACQT25D12**
End cover segment	Gray	—	10	**XBASQT15**	**XBASQT15**	**XBASQT25**
Partition plate	—	—	50	**XBATQTD12**	**XBATQTD12**	**XBATQTD12**
Plug-in bridge	Red	2	10	**XBAFBS25**	**XBAFBS25**	**XBAFBS26**
		3	50	**XBAFBS35**	**XBAFBS35**	**XBAFBS36**
		5	50	**XBAFBS55**	**XBAFBS55**	**XBAFBS56**
		10	10	**XBAFBS105**	**XBAFBS105**	**XBAFBS106**
Test adapter	—	—	10	**XBATSPAI4**	**XBATSPAI4**	**XBATSPAI4**
2.3 mm diameter test plug	—	—	—	**XBATSMPS-_** ①	**XBATSMPS-_** ①	**XBATSMPS-_** ①
Modular test plug	—	—	10	**XBATSPS5**	**XBATSPS5**	**XBATSPS5**
Blank marker strip center and external marking	White	—	10	**XBMZBF5** ②	**XBMZBF5** ②	**XBMZBF6** ②
Blank marker strip center labeling (strip of 10)	White	—	10	**XBMZB5** ②	**XBMZB5** ②	**XBMZB6** ②

Technical Data and Specifications

IDC—Disconnect and Component Terminal Blocks

Description	XBQT15MT	XBQT15TG	XBQT25TG
Technical Data in Accordance with IEC			
Maximum load current in A/cross-section in mm^2	16/1.5	16/1.5	16/2.5
Rated surge voltage in kV/contamination class	6/3	6/3	6/3
Surge voltage category/insulating material group	III/I	III/I	III/I
Connection Cross-Section			
Core insulation	PVC/PE	PVC/PE	PVC/PE
Single/multiple/fine strand in mm^2	1.5	1.5	2.5
Halogen-free in mm^2	1.5	1.5	2.5
Fine strand/superfine strand in AWG (mm^2)	24–16 (0.25–0.34)	24–16 (0.25–0.34)	20–14 (—)
Repeated connections minimum 100 x in mm^2	0.25–1.5	0.25–1.5	0.5–2.5

Dimensions

Approximate Dimensions in Inches (mm)

IDC—Disconnect and Component Terminal Blocks

Catalog Number	Width	Length	Cover Length	Height for— 35 x 7.5 in	35 x 15 in
XBQT15MT	0.20 (5.2)	3.01 (76.4)	0.09 (2.2)	1.55 (39.3)	1.84 (46.8)
XBQT15TG	0.20 (5.2)	3.01 (76.4)	0.09 (2.2)	1.55 (39.3)	1.84 (46.8)
XBQT25TG	0.24 (6.2)	3.25 (82.5)	0.09 (2.2)	1.69 (42.8)	1.98 (50.3)

Notes

① For ordering information, see **Page V7-T8-103**.

② For information on Printed Marking Tag Options, see **Page V7-T8-98**.

For additional accessories, see **Page V7-T8-90**.

Hybrid Terminal Blocks

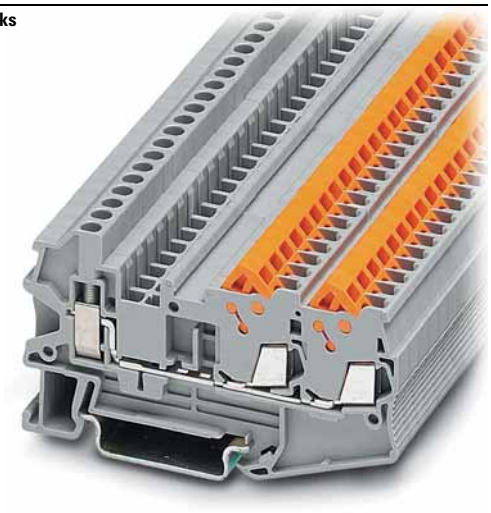

Contents

Description	Page
Single Level	V7-T8-68
Multi-Conductor	V7-T8-70
Double Level	V7-T8-73
Fuse Terminal Blocks	V7-T8-75
Disconnect and Component Terminal Blocks	V7-T8-77
Hybrid Terminal Blocks	
Accessories	V7-T8-80
Technical Data and Specifications	V7-T8-81
Dimensions	V7-T8-81

Hybrid Terminal Blocks

Product Description

The XBQT hybrid terminal blocks offer the best of both worlds. One side offers the time-saving advantage of our insulation displacement connection technology, while the other side offers a universal screw connection. Use the IDC side on the internal (factory) control cabinet side and the screw connection on the end customer (field) side. Ground terminal blocks of the same shape are also available

Product Selection

XBQU25

IDC—Hybrid Terminal Blocks, Single Level

Terminal Width	Maximum Wire Size	IEC Screw Connection in V/A/AWG	IEC IDC Connection in V/A/AWG	UL-cUL Screw Connection in V/A/AWG	UL-cUL IDC Connection in V/A/AWG	Color	Standard Pack	Catalog Number
5.2 mm	12 AWG/2.5 mm^2	800/17.5/26–12	800/17.5/24–16	600/10/26–12	600/10/24–16	Gray	50	**XBQU15**
6.2 mm	10 AWG/4 mm^2	800/24/26–10	800/24/20–14	600/15/26–10	600/15/20–14	Gray	50	**XBQU25**

XBQU15D12

IDC—Hybrid Terminal Blocks, Three-Wire

Terminal Width	Maximum Wire Size	IEC Screw Connection in V/A/AWG	IEC IDC Connection in V/A/AWG	UL-cUL Screw Connection in V/A/AWG	UL-cUL IDC Connection in V/A/AWG	Color	Standard Pack	Catalog Number
5.2 mm	12 AWG/2.5 mm^2	800/17.5/26–12	800/17.5/24–16	800/10/26–12	800/10/24–16	Gray	50	**XBQU15D12**
6.2 mm	10 AWG/4 mm^2	800/24/26–10	800/24/20–14	600/15/26–10	600/15/20–14	Gray	50	**XBQU25D12**

XBQU25PE

IDC—Hybrid Terminal/Ground Blocks

Terminal Width	Maximum Wire Size	IEC Screw Connection in V/A/AWG	IEC IDC Connection in V/A/AWG	UL-cUL Screw Connection in V/A/AWG	UL-cUL IDC Connection in V/A/AWG	Color	Standard Pack	Catalog Number
5.2 mm	12 AWG/2.5 mm^2	—/—/26–12	—/—/24–16	—/—/26–12	—/—/24–16	Gray	50	**XBQU15PE**
6.2 mm	10 AWG/4 mm^2	—/—/26–10	—/—/20–14	—/—/26–10	—/—/20–14	Gray	50	**XBQU25PE**

Accessories

IDC—Hybrid Terminal Blocks

Description	Color	Number of Positions	Standard Pack	XBQU15 Catalog Number	XBQU25 Catalog Number	XBQU15D12 Catalog Number	XBQU25D12 Catalog Number
End cover	Gray	—	10	**XBACQU15**	**XBACQU25**	**XBACQU15D12**	**XBACQU25D12**
End segment	Gray	—	10	—	—	**XBASQT15**	**XBASQT25**
Partition plate	—	—	50	**XBATQT25**	**XBATQT25**	**XBATQTD12**	**XBATQTD12**
Plug-in bridge—for cross connections in the bridge shaft	Red	2	10	**XBAFBS25**	**XBAFBS26**	**XBAFBS25**	**XBAFBS26**
		3	50	**XBAFBS35**	**XBAFBS36**	**XBAFBS35**	**XBAFBS36**
		5	50	**XBAFBS55**	**XBAFBS56**	**XBAFBS55**	**XBAFBS56**
		10	10	**XBAFBS105**	**XBAFBS106**	**XBAFBS105**	**XBAFBS106**
		50	10	**XBAFBS505**	**XBAFBS506**	**XBAFBS505**	**XBAFBS506**
Test adapter	—	—	10	**XBATSPAI4**	**XBATSPAI4**	**XBATSPAI4**	**XBATSPAI4**
2.3 mm diameter test plug	—	—	—	**XBATSMPS-_** ①	**XBATSMPS-_** ①	**XBATSMPS-_** ①	**XBATSMPS-_** ①
Modular test plug	—	—	10	**XBATSPS5**	**XBATSPS6**	**XBATSPS5**	**XBATSPS6**
Blank marker strip center and external marking	White	—	10	**XBMZBF5** ②	**XBMZBF6** ②	**XBMZBF5** ②	**XBMZBF6** ②
Blank marker strip center labeling (strip of 10)				**XBMZB5** ②	**XBMZB6** ②	**XBMZB5** ②	**XBMZB6** ②

IDC—Hybrid Terminal/Ground Blocks

Description	Color	Number of Positions	Standard Pack	XBQU15PE Catalog Number	XBQU25PE Catalog Number
End cover	Gray	—	10	**XBACQU15**	**XBACQU25**
Partition plate	—	—	50	**XBATQT25**	**XBATQT25**
Plug-in bridge—for cross connections in the bridge shaft	Red	2	10	**XBAFBS25**	**XBAFBS26**
		3	50	**XBAFBS35**	**XBAFBS36**
		5	50	**XBAFBS55**	**XBAFBS56**
		10	10	**XBAFBS105**	**XBAFBS106**
		50	10	**XBAFBS505**	**XBAFBS506**
Test adapter	—	—	10	**XBATSPAI4**	**XBATSPAI4**
2.3 mm diameter test plug	—	—	—	**XBATSMPS-_** ①	**XBATSMPS-_** ①
Modular test plug	—	—	10	**XBATSPS5**	**XBATSPS6**
Blank marker strip center and external marking	White	—	10	**XBMZBF5** ②	**XBMZBF6** ②
Blank marker strip center labeling (strip of 10)				**XBMZB5** ②	**XBMZB6** ②

Notes

① For ordering information, see **Page V7-T8-103**.

② For information on Printed Marking Tag Options, see **Page V7-T8-98**.

For additional accessories, see **Page V7-T8-90**.

Technical Data and Specifications

Screw Connection Single Level—Through-Feed

Description	XBQU15	XBQU25	XBQU15PE	XBQU25PE	XBQU15D12	XBQU25D12
Technical Data in Accordance with IEC						
Maximum load current in A/cross-section in mm^2	17.5/1.5	24/2.5	—	—	17.5/1.5	24/2.5
Rated surge voltage in kV/contamination class	8/3	8/3	8/3	8/3	8/3	8/3
Surge voltage category/insulating material group	III/I	III/I	III/I	III/I	III/I	III/I
Connection Cross-Section						
Core insulation	PVC/PE	PVC/PE	PVC/PE	PVC/PE	PVC/PE	PVC/PE
Single/multiple/fine strand in mm^2	1.5	2.5	1.5	2.5	1.5	2.5
Halogen-free in mm^2	1.5	2.5	1.5	2.5	1.5	2.5
Fine strand/superfine strand in AWG (mm^2)	24–16 (0.25–0.34)	20–14 (—)	24–16 (0.25–0.34)	20–14 (—)	24–16 (0.25–0.34)	20–14 (—)
Repeated connections minimum 100 x in mm^2	0.25–1.5	0.5–2.5	0.25–1.5	0.5–2.5	0.25–1.5	0.5–2.5
Connection Capacity—Screw Connection						
Stranded with ferrule/with ferrule and plastic sleeve in mm^2	0.25–2.5/0.25–2.5	0.25–4/0.25–4	0.25–2.5/0.25–2.5	0.25–4/0.25–4	0.25–2.5/0.25–2.5	0.25–4/0.25–4
Multi-Conductor Connection (same cross-section)						
Solid/stranded in mm^2	0.14–1.5/0.14–1.5	0.14–1.5/0.14–1.5	0.14–1.5/0.14–1.5	0.14–1.5/0.14–1.5	0.14–1.5/0.14–1.5	0.14–1.5/0.14–1.5
Stranded with ferrules without plastic sleeve in mm^2	0.25–1.5	0.25–1.5	0.25–1.5	0.25–1.5	0.25–1.5	0.25–1.5
Stranded with twin ferrule with plastic sleeve in mm^2	0.5–1.5	0.5–2.5	0.5–1.5	0.5–2.5	0.5–1.5	0.5–2.5
Stripping length in inches (mm)	0.35 (9)	0.35 (9)	0.35 (9)	0.35 (9)	0.35 (9)	0.35 (9)
Thread	M3	M3	M3	M3	M3	M3
Torque in in-lb (Nm)	5.3–7.1 (0.6–0.8)	5.3–7.1 (0.6–0.8)	5.3–7.1 (0.6–0.8)	5.3–7.1 (0.6–0.8)	5.3–7.1 (0.6–0.8)	5.3–7.1 (0.6–0.8)

Dimensions

Approximate Dimensions in Inches (mm)

Screw Connection Single Level—Through-Feed

Catalog Number	Width	Length	Cover Width	Height for— 35 x 7.5 in	35 x 15 in
XBQU15	0.20 (5.2)	2.31 (58.8)	0.09 (2.2)	1.69 (42.8)	1.98 (50.3)
XBQU25	0.24 (6.2)	2.46 (62.6)	0.09 (2.2)	1.69 (42.8)	1.98 (50.3)
XBQU15PE	0.20 (5.2)	2.31 (58.8)	0.09 (2.2)	1.69 (42.8)	1.98 (50.3)
XBQU25PE	0.24 (6.2)	2.46 (62.6)	0.09 (2.2)	1.69 (42.8)	1.98 (50.3)
XBQU15D12	0.20 (5.2)	3.01 (76.4)	0.09 (2.2)	1.69 (42.8)	1.98 (50.3)
XBQU25D12	0.24 (6.2)	3.25 (82.5)	0.09 (2.2)	1.69 (42.8)	1.98 (50.3)

Miniature Circuit Breakers

Contents

Description	*Page*
Miniature Circuit Breakers	
Circuit Breakers	**V7-T8-83**
Flat-Type Fuse Terminal Blocks	**V7-T8-86**
Spring Cage Fuse Terminal Blocks	**V7-T8-88**

Miniature Circuit Breakers Overview

Product Description

The new ***XB*** Series thermal miniature circuit breaker offers convenient overload protection. This space-saving single-pole circuit breaker, available up to 10 amps, can be inserted into a screw connection fuse terminal block, XBUK6FSI, or a spring cage fuse terminal block, XBPT4FSI, which is available with or without light indication. The XBATCP combines the reclosing capability of a circuit breaker with the overload protection of a fuse. The integrated switching function makes it possible to switch the circuit breaker back on immediately, guaranteeing system availability. The device can also be used for switching purposes, as an ON/OFF switch. The Plug-in design allows for quick and efficient replacement.

Standards and Certifications

- UL and cUL recognized
- UL 1077—File No. E301915
- CE approved

Circuit Breakers

Contents

Description	*Page*
Circuit Breakers	
Accessories	**V7-T8-84**
Technical Data and Specifications	**V7-T8-84**
Time/Current Curve	**V7-T8-85**
Dimensions	**V7-T8-85**
Flat-Type Fuse Terminal Blocks	**V7-T8-86**
Spring Cage Fuse Terminal Blocks	**V7-T8-88**

Circuit Breakers

Product Description

The thermal miniature circuit breaker can be switched back on again, has a compact design, and is available in 10 finely graded steps for nominal currents from 0.1 to 10A.

Product Selection

XBAT

Thermal Miniature Circuit Breaker

Connection Data in Vac/Vdc	Nominal Current	Color	Standard Pack	Catalog Number
250/65	0.1A	Black	20	**XBATCPT**
	0.25A	Black	20	**XBATCPQ**
	0.5A	Black	20	**XBATCPH**
	1.0A	Black	20	**XBATCP1**
	2.0A	Black	20	**XBATCP2**
	3.0A	Black	20	**XBATCP3**
	4.0A	Black	20	**XBATCP4**
	6.0A	Black	20	**XBATCP6**
	8.0A	Black	20	**XBATCP8**
	10.0A	Black	20	**XBATCP10**

Accessories

Thermal Miniature Circuit Breaker

Description	Color	Number of Positions	Standard Pack	XBAT Catalog Number
Blank marker strip	White	—	10	**XBMZBF5** ①
Flat type terminal blocks	—	—	—	**XBUK6FSI**
				XBUK6FSIL12
				XBUK6FSIL24
				XBPT4FSI
				XBPT4FSIL12
				XBPT4FSIL24

Technical Data and Specifications

Thermal Miniature Circuit Breaker

Description	XBAT
Technical Data in Accordance with IEC	
Nominal voltage in Vac/Vdc	250/65
Nominal current in A	0.25–10
Ambient temperature	–4 to 140°F (–20 to 60°C)
Maximum Power Dissipation	
Rated surge voltage in kV/contamination class	2.5/2
Surge voltage category/insulating material group	III/I
Switching Capacity	
Cycles with 1 x I_N (low-induction)	6000
Cycles with 1 x I_N (induction)	3000
Cycles with 2 x I_N (induction)	500
Switching Capacity I CN	
For nominal currents of 0.25–4A/6–10A	6 x I_N/8 x I_N
Switching capacity (UL 1077) 250 Vac/65 Vdc	2000/200

Nominal Currents and Internal Resistances

Nominal Current (A)	Internal Resistance (3/4)
0.25	14
0.5	3.4
1.0	0.9
2.0	0.25
3.0	0.11
4.0	0.07
6.0	≤0.05
8.0	≤0.05
10.0	≤0.05

Note

① For information on Printed Marking Tag Options, see **Page V7-T8-98**.

Time/Current Curve

Total Switch-Off Period for Nominal Current, 73.4°F (23°C)

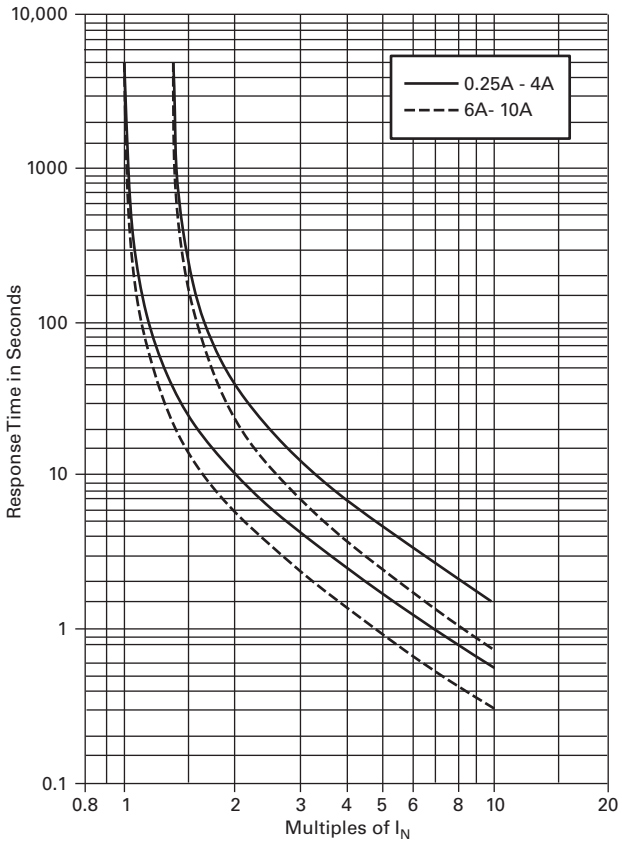

Note: When mounted in rows, the nominal current of the devices can only be transmitted at 80% or must be correspondingly over-dimensioned.

Temperature Factor

Ambient Temperature	Temperature Factor
–4°F (–20°C)	0.76
14°F (–10°C)	0.84
32°F (0°C)	0.91
73.4°F (23°C)	1.00
104°F (40°C)	1.08
122°F (50°C)	1.16
140°F (60°C)	1.24

8

Dimensions

Approximate Dimensions in Inches (mm)

XBUK6FSI with XBAT

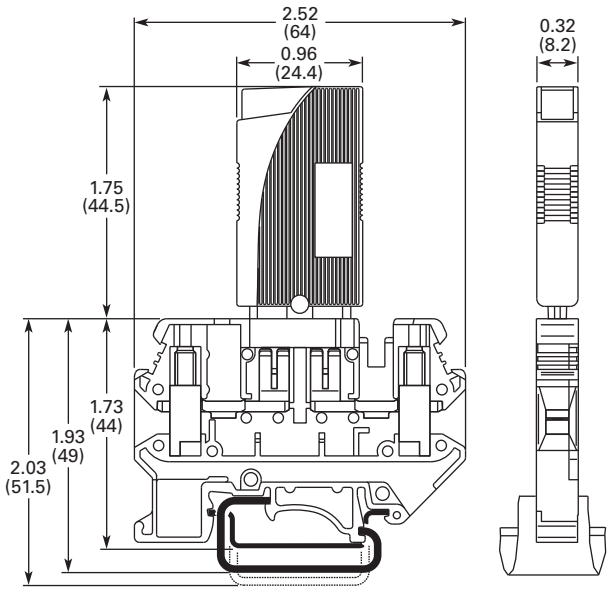

XBPT4FSI with XBAT

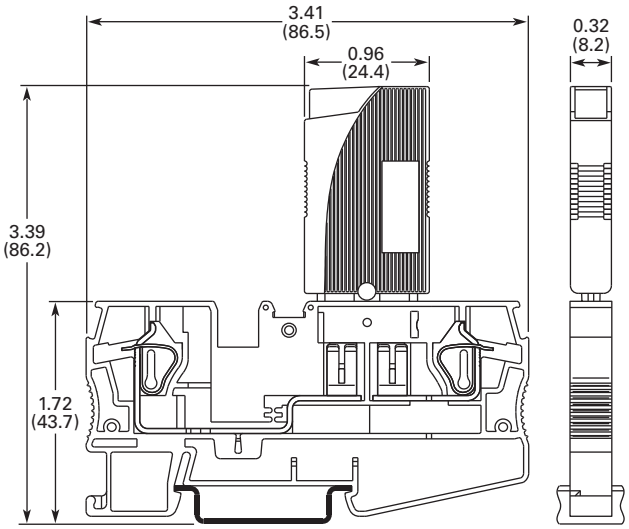

Flat-Type Fuse Terminal Blocks

Contents

Description	*Page*
Circuit Breakers	**V7-T8-83**
Flat-Type Fuse Terminal Blocks	
Accessories	**V7-T8-86**
Technical Data and Specifications	**V7-T8-87**
Dimensions	**V7-T8-87**
Spring Cage Fuse Terminal Blocks	**V7-T8-88**

Flat-Type Fuse Terminal Blocks

Product Description

The fuse terminal blocks can be used as a basic terminal blocks for the XBAT overload miniature circuit breaker, see **Page V7-T8-83**.

Product Selection

XBUK6FSI

Screw Connection Flat-Type Fuse Terminal Blocks

Terminal Width	Maximum Wire Size	Connection Data in V/A/AWG	UL-cUL Ratings in V/A/AWG	Color	Standard Pack	Catalog Number
Flat-Type Fuse Terminal Block						
8.2 mm	8 AWG/6 mm^2	250/—/24–8	300/30/26–8	Black	50	**XBUK6FSI**
Flat-Type Fuse Terminal Block with LED, Red 12 Vdc, 2.0 mA						
8.2 mm	8 AWG/6 mm^2	250/—/24–8	300/30/26–8	Black	50	**XBUK6FSIL12**
Flat-Type Fuse Terminal Block with LED, Red 24 Vdc, 2.0 mA						
8.2 mm	8 AWG/6 mm^2	250/—/24–8	300/30/26–8	Black	50	**XBUK6FSIL24**

Accessories

Flat-Type Fuse Terminal Blocks

Description	Color	Number of Positions	Standard Pack	XBUK6FSI Catalog Number	XBUK6FSIL_ Catalog Number
Blank marker strip	White	—	10	**XBMZB8** ①	**XBMZB8** ①

Note

① For information on Printed Marking Tag Options, see **Page V7-T8-98**.

Technical Data and Specifications

Flat-Type Fuse Terminal Blocks

Description	XBUK6FSI	XBUK6FSIL_
Technical Data in Accordance with IEC		
Fuse type ISO	C	C
Maximum current with single arrangement in A	30	30
Maximum Power Dissipation		
Rated surge voltage in kV/contamination class	4/3	4/3
Surge voltage category/insulating material group	III/I	III/I
Connection Capacity		
Stranded with ferrule with plastic sleeve in mm^2	0.25–4	0.25–4
Stranded with ferrule without plastic sleeve in mm^2	0.25–6	0.25–6
Stranded with twin ferrule with plastic sleeve in mm^2	—	—
Multi-Conductor Connection (same cross-section)		
Solid/stranded in mm^2	0.2–2.5/0.2–2.5	0.2–2.5/0.2–2.5
Stranded with ferrules without plastic sleeve in mm^2	0.25–2.5	0.25–2.5
Stranded with twin ferrule with plastic sleeve in mm^2	0.5–4.0	0.5–4.0
Stripping length in inches (mm)	0.39 (10)	0.39 (10)
Thread	M4	M4
Torque in in-lb (Nm)	13.3–14.2 (1.5–1.6)	13.3–14.2 (1.5–1.6)

Dimensions

Approximate Dimensions in Inches (mm)

Flat-Type Fuse Terminal Blocks

Catalog Number	Width	Length	Height for— 32 in	35 x 7.5 in	35 x 15 in
XBUK6FSI	0.32 (8.2)	2.91 (74.0)	2.24 (57.0)	2.05 (52.0)	2.34 (59.5)
XBUK6FSIL12	0.32 (8.2)	2.91 (74.0)	2.24 (57.0)	2.05 (52.0)	2.34 (59.5)
XBUK6FSIL24	0.32 (8.2)	2.91 (74.0)	2.24 (57.0)	2.05 (52.0)	2.34 (59.5)

Spring Cage Fuse Terminal Blocks

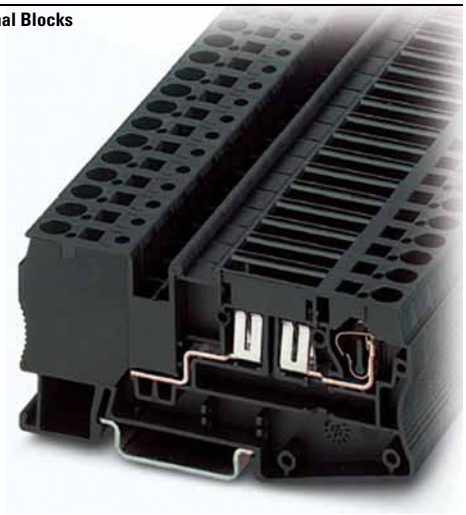

Contents

Description	*Page*
Circuit Breakers	**V7-T8-83**
Flat-Type Fuse Terminal Blocks	**V7-T8-86**
Spring Cage Fuse Terminal Blocks	
Accessories	**V7-T8-88**
Technical Data and Specifications	**V7-T8-89**
Dimensions	**V7-T8-89**

Spring Cage Fuse Terminal Blocks

Product Description

Flat-type fuses or the XBAT miniature circuit breaker (see **Page V7-T8-83**) can be used as the fuse element in these XBPT

Spring Cage Fuse Terminal Blocks. Terminal blocks with a light indicator are available for quick error diagnosis.

Product Selection

XBPT4FSI

Spring Cage Fuse Terminal Blocks

Terminal Width	Maximum Wire Size	Connection Data in V/A/AWG	UL-cUL Ratings in V/A/AWG	Color	Standard Pack	Catalog Number
Spring Cage Fuse Terminal Block						
8.2 mm	10 AWG/4 mm^2	400/30/28–10	300/30/24–10	Black	50	**XBPT4FSI**
Spring Cage Fuse Terminal Block with LED, Red 12 Vdc, 2.0 mA						
8.2 mm	10 AWG/4 mm^2	400/30/28–10	300/30/24–10	Black	50	**XBPT4FSIL12**
Spring Cage Fuse Terminal Block with LED, Red 24 Vdc, 2.0 mA						
8.2 mm	10 AWG/4 mm^2	400/30/28–10	300/30/24–10	Black	50	**XBPT4FSIL24**

Accessories

Flat-Type Fuse Terminal Blocks

Description	Color	Number of Positions	Standard Pack	XBPT4FSI Catalog Number	XBPT4FSIL_ Catalog Number
Test adapter	—	—	10	**XBATSPAI4**	**XBATSPAI4**
2.3 mm diameter test plug	—	—	—	**XBATSMPS-_** ①	**XBATSMPS-_** ①
Modular test plug	—	—	10	**XBATSPS8**	**XBATSPS8**
Blank marker strip center and external marking	White	—	10	**XBMZBF8** ②	**XBMZBF8** ②
Blank marker strip center labeling (strip of 10)	White	—	10	**XBMZB8** ②	**XBMZB8** ②

Notes

① For ordering information, see **Page V7-T8-103**.

② For information on Printed Marking Tag Options, see **Page V7-T8-98**.

Technical Data and Specifications

Flat-Type Fuse Terminal Blocks

Description	XBPT4FSI	XBPT4FSIL_
Technical Data in Accordance with IEC		
Fuse type ISO	C	C
Maximum current with single arrangement in A	30	30
Maximum Power Dissipation		
Rated surge voltage in kV/contamination class	6/3	6/3
Surge voltage category/insulating material group	III/I	III/I
Connection Capacity		
Stranded with ferrule with plastic sleeve in mm^2	0.25–4	0.25–4
Stranded with ferrule without plastic sleeve in mm^2	0.25–4	0.25–4
Stranded with twin ferrule with plastic sleeve in mm^2	0.5	0.5
Stripping length in inches (mm)	0.39 (10)	0.39 (10)

Dimensions

Approximate Dimensions in Inches (mm)

Flat-Type Fuse Terminal Blocks

Catalog Number	Width	Length	Height for— 35 x 7.5 in	35 x 15 in
XBPT4FSI	0.32 (8.2)	3.41 (86.5)	1.71 (43.5)	2.01 (51.0)
XBPT4FSIL12	0.32 (8.2)	3.41 (86.5)	1.71 (43.5)	2.01 (51.0)
XBPT4FSIL24	0.32 (8.2)	3.41 (86.5)	1.71 (43.5)	2.01 (51.0)

***XB* Series Accessories**

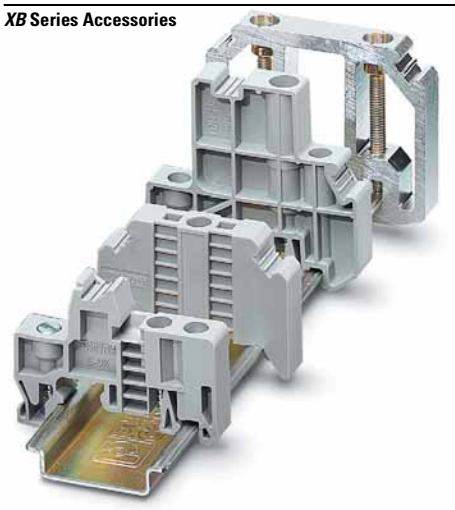

Contents

Description	*Page*
XB Series Accessories	
End Stops	**V7-T8-91**
DIN Rails	**V7-T8-92**
Angled Mounting Brackets	**V7-T8-93**
Ferrules	**V7-T8-94**
Hand Tools	**V7-T8-97**
Marking Accessories	**V7-T8-98**
Testing Accessories	**V7-T8-103**
Separating Plates, Covers and Bridges	**V7-T8-103**

XB Series Accessories Overview

End Stops

The end stop provides an anchor point at each end of the rail assembly by attaching directly to the DIN rail. A wide range of end stop options are available, including those that mount with one or multiple screws and those that do not require screws for mounting. End stops also have a location for marking material to be placed.

DIN Rail

Eaton offers ways for time-saving and secure mounting of components needed for electrical connections. DIN rail provides the basis for the inner design of the control cabinet and ensures a firm hold of the rail-mountable components. Eaton offers a wide range of standard DIN rails sizes and materials, solid or slotted. Or, contact us about custom lengths of pre-cut rail or ordering pre-drilled rail. The DIN rails are designed in accordance with the European standard EN 60715.

Angled Mounting Brackets

Angled mounting brackets are used to mount DIN rail at a more accessible angle for wiring and troubleshooting.

Ferrules

Ferrules are available with or without an insulating sleeve. The plastic insulating sleeve simplifies the fitting of the conductor and the color indicates the size of the cross-section. The closer the connections are, the more reliable the insulation is and the less likely the wires are to splice. Twin ferrules are also available allowing two wires to be easily compressed in one ferrule. Chain bridging, frequently used in industry, becomes easier with twin ferrules.

Hand Tools

Eaton offers an array of hand tools to make it easier to work with our terminal blocks. The XBTCUTSTP tool is recommended for cutting and stripping PVC insulated wires. The ergonomically shaped crimping pliers, XBTCRMP66, result in fatigue-free work by spreading the manual force equally between the six jaws. The XBTDVR screwdrivers have a rotating cap that prevents user discomfort even at high torques and allows rapid rotation. The ergonomically shaped handle further aids the user's comfort. The blade is made from CVM steel, hardened and chrome-plated.

Marking Accessories

The marking system provides logical and clear identification of the modular terminal blocks and interface modules. The blank marker strip is designed for marking terminal blocks, equipment and smaller modules with marker grooves. The marker strip is available in all common pitches in printed and unprinted versions.

Testing Accessories

The range of test accessories available includes different test plugs, so that an optimum solution can be realized for every application. In addition to pre-assembled test plugs, plugs are also available that can be configured individually to form test adapters.

End Stops

Product Selection

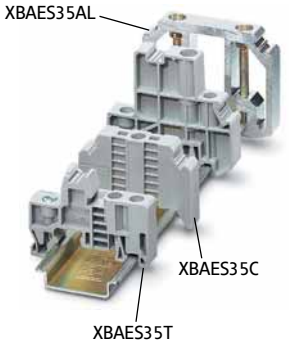

Snap-On End Stop (15 mm)

Standard Pack	Catalog Number
50	**XBAES15N**

Snap-On End Stop (35 mm)

Standard Pack	Catalog Number
50	**XBAES35N**

Snap-on end stops for 35 mm and 15 mm DIN rails can be fitted with blank marker strips and adjustable terminal strip markers, parking facility for bridges and testing accessories.

Universal End Stop (15 mm)

Standard Pack	Catalog Number
50	**XBAES15C**

Universal End Stop (35 mm)

Standard Pack	Catalog Number
50	**XBAES35T**
50	**XBAES35C**

Screwed on, labeling with blank marker strips and terminal strip markers.

Aluminum End

Standard Pack	Catalog Number
10	**XBAES35AL**

Snaps on, for end support of 50–240 mm terminal blocks, labeling with XBMZB10.

Cross-Reference of Terminal Blocks Marking, End Stops

Catalog Number	XBMKLM2	XBMGLMA	XBMUBE
XBAES35N	X	—	—
XBAES35T	—	X	X

Dimensions

Approximate Dimensions in Inches (mm)

Snap-On End Stop

XBAES35N

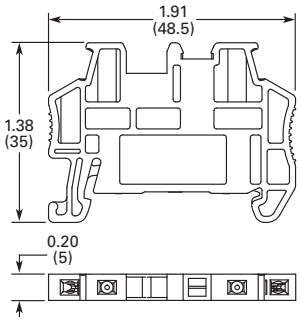

XBAES15N

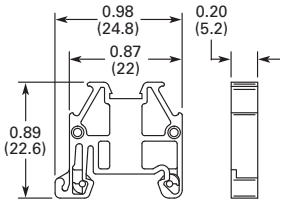

Aluminum End Stop

XBAES35AL

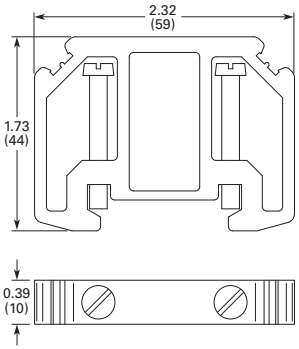

Universal End Stop

XBAES35T

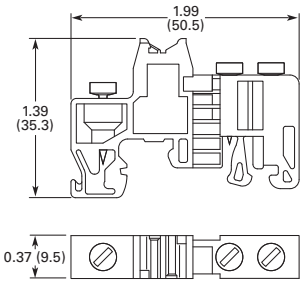

XBAES35C

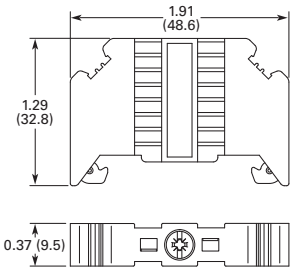

XBAES15C

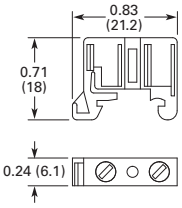

DIN Rails

Product Selection

Perforated and unperforated DIN rails in accordance with E 60715.

Features

- High dimensional accuracy
- Restricted tolerances
- Double surface tempering, galvanized and chromated
- All 2m in length
- Customization available

35 x 7.5 mm x 2m

Standard Pack	Catalog Number
Slotted	
25	**XBANS3575P**
Solid	
25	**XBANS3575U**

35 x 15 mm x 2m

Standard Pack	Catalog Number
Slotted	
25	**XBANS3515P**
Solid	
25	**XBANS3515U**

15 x 5.5 mm x 2m

Standard Pack	Catalog Number
25	**XBANS15P**

Aluminum DIN Rails (Perforated)

Standard Pack	Catalog Number
35/7.5/2m	
25	**XBANS3575PL**
35/58/2m	
6	**XBANS35PL**

Dimensions

Approximate Dimensions in Inches (mm)

35 x 7.5 mm DIN Rail

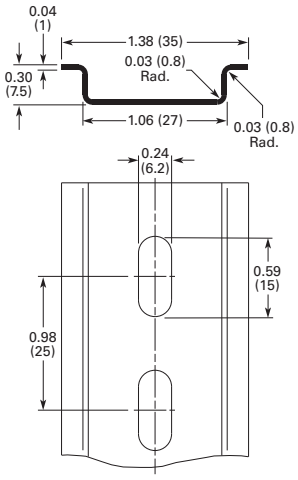

35 x 15 mm DIN Rail

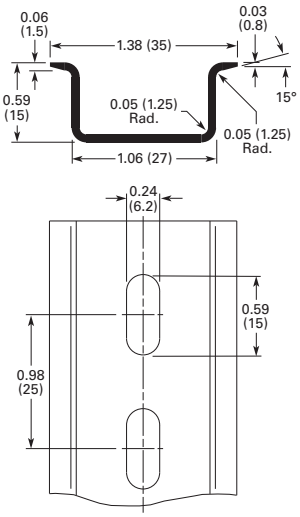

15 x 5.5 mm x 2m DIN Rail

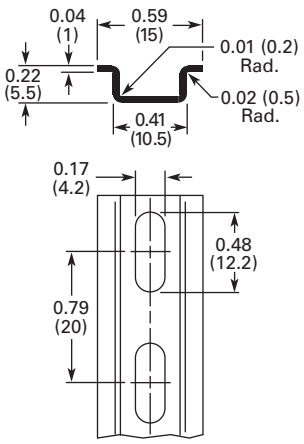

XBANS35PL Raised Rail

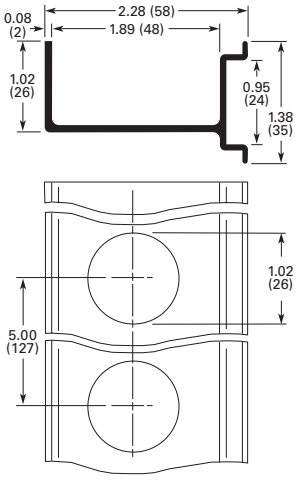

Angled Mounting Brackets

Product Selection

The angled brackets enable the DIN rail to be mounted with a spacing or at an angle of 30°.

Features

- For mounting DIN rail at 30° angle
- For use with M6 screw
- Chromated steel
- Provides better visibility

Angled Mounting Bracket

Standard Pack	Catalog Number
Height Inches (mm) 1.39 (35.4)	
10	**XBANBGS**
Height Inches (mm) 1.81 (46)	
10	**XBANBGSH**

Dimensions

Approximate Dimensions in Inches (mm)

XBANBGS

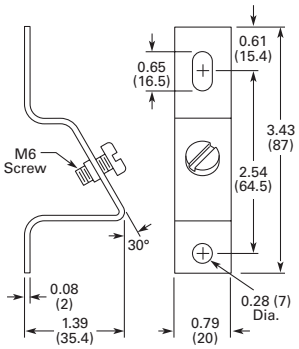

XBANBGSH

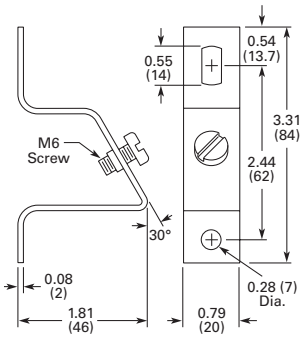

Ferrules

Product Selection

Ferrules are offered in two basic designs—an insulated style available in models for wire sizes 20 through 4 AWG and a non-insulated type available in models for wire sizes 22 through 6 AWG.

Note: UL Ratings do not typically pertain to the use of Ferrules—Ferrules are covered under DIN VDE 0611.

Insulated

- Tube: soft electrolytic copper (E-CU), tin plated
- Plastic sleeve: polypropylene
  - Long-term temperature 105°C
  - Short-term temperature 120°C

XBAF1

Insulated Ferrules

Wire Size AWG (mm²)	Color ①	Standard Pack ②	Catalog Number
20 (0.5)	White	100	**XBAF1**
18 (0.75)	Gray	100	**XBAF3**
18 (1)	Red	100	**XBAF4**
16 (1.5)	Black	100	**XBAF6**
14 (2.5)	Blue	100	**XBAF9**
14 (2.5)	Blue	100	**XBAF10**
12 (4)	Gray	100	**XBAF11**
12 (4)	Gray	100	**XBAF12**
10 (6)	Yellow	100	**XBAF13**
10 (6)	Yellow	100	**XBAF14**
8 (10)	Red	100	**XBAF15**
8 (10)	Red	100	**XBAF16**
6 (16)	Blue	100	**XBAF17**
6 (16)	Blue	100	**XBAF18**
4 (25)	Yellow	100	**XBAF19**

Non-Insulated

- Tube: soft electrolytic copper (E-CU), tin plated

XBAF20

Non-Insulated Ferrules

Wire Size AWG (mm²)	Standard Pack ②	Catalog Number
20 (0.5)	100	**XBAF20**
18 (0.75)	100	**XBAF21**
18 (1)	100	**XBAF23**
16 (1.5)	100	**XBAF24**
14 (2.5)	100	**XBAF25**
12 (4)	100	**XBAF26**
10 (6)	100	**XBAF27**
8 (10)	100	**XBAF28**
6 (16)	100	**XBAF29**

Special Applications

The twin ferrules allow two conductors to be compressed practically in one ferrule.

The colored coding of the various cross sections corresponds to DIN 46 228-4.

XBAFT1

Non-Insulated Twin Ferrules

Wire Size AWG (mm²)	Color ①	Standard Pack ②	Catalog Number
20 (0.5)	White	100	**XBAFT1**
18 (0.75)	Gray	100	**XBAFT3**
18 (1)	Red	100	**XBAFT4**
16 (1.5)	Black	100	**XBAFT6**
14 (2.5)	Blue	100	**XBAFT9**
12 (4)	Gray	100	**XBAFT11**
10 (6)	Yellow	100	**XBAFT13**
8 (10)	Red	100	**XBAFT15**
6 (16)	Blue	100	**XBAFT18**

Notes

① The colored coding of the various cross-sections corresponds to DIN 46 228-4.

② Standard pack is the number of ferrules that come in each bag. Must order in multiples of standard pack.
Example: **XBAF1**—an order for 200 pieces will receive 2 bags of ferrules, each with 100 pieces.

Dimensions

Approximate Dimensions in Inches (mm)

Ferrules with Insulating Collar

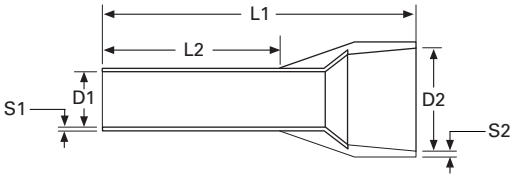

Catalog Number	Approximate Dimensions D1	D2	L1	L2	S1	S2
XBAF1	0.04 (1.1)	0.10 (2.5)	0.55 (14.0)	0.31 (8.0)	0.006 (0.15)	0.010 (0.25)
XBAF3	0.05 (1.3)	0.11 (2.8)	0.55 (14.0)	0.31 (8.0)	0.006 (0.15)	0.010 (0.25)
XBAF4	0.06 (1.5)	0.12 (3.0)	0.55 (14.0)	0.31 (8.0)	0.006 (0.15)	0.012 (0.30)
XBAF6	0.07 (1.8)	0.13 (3.4)	0.55 (14.0)	0.31 (8.0)	0.006 (0.15)	0.012 (0.30)
XBAF9	0.09 (2.3)	0.17 (4.2)	0.55 (14.0)	0.31 (8.0)	0.006 (0.15)	0.012 (0.30)
XBAF10	0.09 (2.3)	0.17 (4.2)	0.94 (24.0)	0.71 (18.0)	0.006 (0.15)	0.012 (0.30)
XBAF11	0.11 (2.8)	0.19 (4.8)	0.67 (17.0)	0.39 (10.0)	0.008 (0.20)	0.012 (0.30)
XBAF12	0.11 (2.8)	0.19 (4.8)	1.02 (26.0)	0.71 (18.0)	0.008 (0.20)	0.012 (0.30)
XBAF13	0.14 (3.5)	0.24 (6.2)	0.79 (20.0)	0.47 (12.0)	0.008 (0.20)	0.012 (0.30)
XBAF14	0.14 (3.5)	0.24 (6.2)	1.02 (26.0)	0.71 (18.0)	0.008 (0.20)	0.012 (0.30)
XBAF15	0.18 (4.6)	0.30 (7.5)	0.87 (22.0)	0.47 (12.0)	0.008 (0.20)	0.012 (0.30)
XBAF16	0.18 (4.6)	0.30 (7.5)	1.10 (28.0)	0.71 (18.0)	0.008 (0.20)	0.012 (0.30)
XBAF17	0.23 (5.8)	0.35 (8.8)	0.94 (24.0)	0.47 (12.0)	0.008 (0.20)	0.016 (0.40)
XBAF18	0.23 (5.8)	0.35 (8.8)	1.10 (28.0)	0.71 (18.0)	0.008 (0.20)	0.016 (0.40)
XBAF19	0.29 (7.3)	0.43 (11.0)	1.26 (32.0)	0.71 (18.0)	0.008 (0.20)	0.020 (0.50)

Ferrules without Insulating Collar

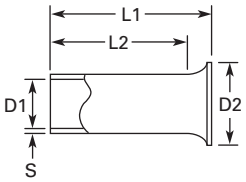

Catalog Number	Approximate Dimensions D1	D2	L1	L2	S
XBAF20	0.04 (1.0)	0.08 (2.1)	0.24 (6.0)	0.21 (5.3)	0.006 (0.15)
XBAF21	0.05 (1.2)	0.09 (2.3)	0.24 (6.0)	0.21 (5.3)	0.006 (0.15)
XBAF23	0.06 (1.4)	0.10 (2.5)	0.24 (6.0)	0.21 (5.3)	0.006 (0.15)
XBAF24	0.07 (1.7)	0.11 (2.8)	0.28 (7.0)	0.24 (6.0)	0.006 (0.15)
XBAF25	0.09 (2.2)	0.13 (3.4)	0.28 (7.0)	0.24 (6.0)	0.006 (0.15)
XBAF26	0.11 (2.8)	0.16 (4.0)	0.35 (9.0)	0.31 (8.0)	0.008 (0.20)
XBAF27	0.14 (3.5)	0.19 (4.7)	0.47 (12.0)	0.35 (9.0)	0.008 (0.20)
XBAF28	0.18 (4.5)	0.23 (5.8)	0.47 (12.0)	0.43 (10.8)	0.008 (0.20)
XBAF29	0.23 (5.8)	0.30 (7.5)	0.47 (12.0)	0.41 (10.5)	0.008 (0.20)

Approximate Dimensions in Inches (mm)

Twin Ferrules

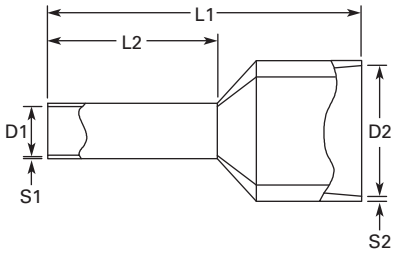

Catalog Number	Approximate Dimensions D1	D2	L1	L2	S1	S2
XBAFT1	0.06 (1.5)	0.10 (2.5)	0.59 (15.0)	0.31 (8.0)	0.006 (0.15)	0.010 (0.25)
XBAFT3	0.07 (1.8)	0.11 (2.8)	0.59 (15.0)	0.31 (8.0)	0.006 (0.15)	0.010 (0.25)
XBAFT4	0.08 (2.1)	0.13 (3.4)	0.59 (15.0)	0.31 (8.0)	0.006 (0.15)	0.012 (0.30)
XBAFT6	0.09 (2.3)	0.14 (3.6)	0.63 (16.0)	0.31 (8.0)	0.006 (0.15)	0.012 (0.30)
XBAFT9	0.11 (2.9)	0.17 (4.2)	0.73 (18.5)	0.39 (10.0)	0.008 (0.20)	0.012 (0.30)
XBAFT11	0.15 (3.8)	0.19 (4.9)	0.91 (23.0)	0.47 (12.0)	0.008 (0.20)	0.012 (0.30)
XBAFT13	0.19 (4.9)	0.23 (5.9)	0.98 (25.0)	0.55 (14.0)	0.008 (0.20)	0.016 (0.40)
XBAFT15	0.26 (6.5)	0.28 (7.2)	1.02 (26.0)	0.55 (14.0)	0.008 (0.20)	0.016 (0.40)
XBAFT18	0.33 (8.5)	0.35 (8.8)	1.22 (31.0)	0.63 (16.0)	0.008 (0.20)	0.020 (0.50)

Hand Tools

Stripping Tools

Product Selection

Stripping Tools

Standard Pack	Catalog Number
1	**XBTCUTSTP**

Technical Data and Specifications

Conductor/Cable Stripping Range

Description	Specification
Conductor/cable	0.2–6 mm^2/24–10 AWG
Wire cutter	6 mm^2/10 AWG

Dimensions

Approximate Dimensions in Inches (mm)

Stripping Tools

Length	Stripping Length	Weight In lbs (g)
8.07 (205)	Up to 18 mm	0.44 (200)

Slotted Screwdrivers

The crimping pliers deform the ferrules hexagonally. For 0.25–6 mm^2 ferrules in accordance with DIN 46 228-1: 1992-08 and DIN 46 228-4: 1990-09.

Product Selection

Slotted Screwdrivers

Standard Pack	Catalog Number
3.5 mm	
1	**XBTDVR35**
4.0 mm	
1	**XBTDVR40**

Marking Accessories

Printed Marking Tag Options

Horizontally Printed Marking Tags and Marking Directions

1	2	3	4	5	6	7	8	9	10

Marking Direction: Horizontal

1	2	3	4	5	6	7	8	9	10

Marking Direction: Vertical

Marking Tags for 5.2 mm Wide Terminal Blocks

Standard Pack	Number Sequence	Catalog Number
ZB5 Tags Vertically Numbered		
10	1–10 ①	**XBMZB5V/1**
10	11–20	**XBMZB5V/11**
10	21–30	**XBMZB5V/21**
10	31–40	**XBMZB5V/31**
10	41–50	**XBMZB5V/41**
10	51–60	**XBMZB5V/51**
10	61–70	**XBMZB5V/61**
10	71–80	**XBMZB5V/71**
10	81–90	**XBMZB5V/81**
10	91–100	**XBMZB5V/91**
ZBF5 Tags Vertically Numbered		
10	1–10 ①	**XBMZBF5V/1**
10	11–20	**XBMZBF5V/11**
10	21–30	**XBMZBF5V/21**
10	31–40	**XBMZBF5V/31**
10	41–50	**XBMZBF5V/41**
10	51–60	**XBMZBF5V/51**
10	61–70	**XBMZBF5V/61**
10	71–80	**XBMZBF5V/71**
10	81–90	**XBMZBF5V/81**
10	91–100	**XBMZBF5V/91**

Marking Tags for 6.2 mm Wide Terminal Blocks

Standard Pack	Number Sequence	Catalog Number
ZB6 Tags Vertically Numbered		
10	1–10 ①	**XBMZB6V/1**
10	11–20	**XBMZB6V/11**
10	21–30	**XBMZB6V/21**
10	31–40	**XBMZB6V/31**
10	41–50	**XBMZB6V/41**
10	51–60	**XBMZB6V/51**
10	61–70	**XBMZB6V/61**
10	71–80	**XBMZB6V/71**
10	81–90	**XBMZB6V/81**
10	91–100	**XBMZB6V/91**
ZBF6 Tags Vertically Numbered		
10	1–10 ①	**XBMZBF6V/1**
10	11–20	**XBMZBF6V/11**
10	21–30	**XBMZBF6V/21**
10	31–40	**XBMZBF6V/31**
10	41–50	**XBMZBF6V/41**
10	51–60	**XBMZBF6V/51**
10	61–70	**XBMZBF6V/61**
10	71–80	**XBMZBF6V/71**
10	81–90	**XBMZBF6V/81**
10	91–100	**XBMZBF6V/91**

Note

① For text printed horizontally, change "V" in catalog number to "H."

Marking Tags for 8.2 mm Wide Terminal Blocks

Standard Pack	Number Sequence	Catalog Number
ZB8 Tags Vertically Numbered		
10	1–10 ①	**XBMZB8V/1**
10	11–20	**XBMZB8V/11**
10	21–30	**XBMZB8V/21**
10	31–40	**XBMZB8V/31**
10	41–50	**XBMZB8V/41**
10	51–60	**XBMZB6V/51**
10	61–70	**XBMZB8V/61**
10	71–80	**XBMZB8V/71**
10	81–90	**XBMZB8V/81**
10	91–100	**XBMZB8V/91**
ZBF8 Tags Vertically Numbered		
10	1–10 ①	**XBMZBF8V/1**
10	11–20	**XBMZBF8V/11**
10	21–30	**XBMZBF8V/21**
10	31–40	**XBMZBF8V/31**
10	41–50	**XBMZBF8V/41**
10	51–60	**XBMZBF8V/51**
10	61–70	**XBMZBF8V/61**
10	71–80	**XBMZBF8V/71**
10	81–90	**XBMZBF8V/81**
10	91–100	**XBMZBF8V/91**

Marking Tags for 10.2 mm Wide Terminal Blocks

Standard Pack	Number Sequence	Catalog Number
ZB10 Tags Vertically Numbered		
10	1–10 ①	**XBMZB10V/1**
10	11–20	**XBMZB10V/11**
10	21–30	**XBMZB10V/21**
ZBF10 Tags Vertically Numbered		
10	1–10 ①	**XBMZBF10V/1**
10	11–20	**XBMZBF10V/11**
10	21–30	**XBMZBF10V/21**

Marking Tags for 12 mm Wide Terminal Blocks

Standard Pack	Number Sequence	Catalog Number
ZB12 Tags Vertically Numbered		
10	1–10 ①	**XBMZB12V/1**
10	11–20	**XBMZB12V/11**
10	21–30	**XBMZB12V/21**
ZBF12 Tags Vertically Numbered		
10	1–10 ①	**XBMZBF12V/1**
10	11–20	**XBMZBF12V/11**
10	21–30	**XBMZBF12V/21**

Marking Tags for 16 mm Wide Terminal Blocks

Standard Pack	Number Sequence	Catalog Number
ZB15 Tags Vertically Numbered		
10	1–10 ①	**XBMZB15V/1**
10	11–20	**XBMZB15V/11**
10	21–30	**XBMZB15V/21**
ZBF15 Tags Vertically Numbered		
10	1–10 ①	**XBMZBF15V/1**
10	11–20	**XBMZBF15V/11**
10	21–30	**XBMZBF15V/21**

Note

① For text printed horizontally, change "V" in catalog number to "H."

Pre-Printed Marking Tags

Terminal Blocks Marking Tags

The tags are made of white self-extinguishing polyamide 6.6 and the imprint is hot stamped with rubproof black ink.

- White marking strip available preprinted. Strip covers 10 terminals. Marking 1–10, 11–20, up to 991–999. Contact Eaton for more options.
  - XBMZB5 or XBMZBF5 for terminal blocks 5.2 mm wide
  - XBMZB6 or XBMZBF6 for terminal blocks 6.2 mm wide
  - XBMZB8 or XBMZBF8 for terminal blocks 8.2 mm wide
  - XBMZB10 or XBMZBF10 for terminal blocks 10.2 mm wide
  - XBMZB12 or XBMZBF12 for terminal blocks 12 mm wide
  - XBMZB15 or XBMZBF15 for terminal blocks 16 mm wide

Marking Tag Sizes

Note: Marking Tag Sizes are for all catalog numbers starting with given prefix, EXCEPT FUSE TERMINAL Blocks.

Proper Marking Tag Size

XBMZB5	XBMZBF5	XBMZB6	XBMZBF6	XBMZB8	XBMZBF8	XBMZB10	XBMZBF10	XBMZB12	XBMZBF12	XBMZB15	XBMZBF15	XBMSSZB
XBUT25	XBPT25 ②	XBUT4	XBPT4 ②	XBUT6	XBPT6 ②	XBUT10	XBPT10 ②	XBPT16 ①	XBPT16 ②	XBUT35	XBPT35 ②	XBMKLMZ
XBUT4FBE ①	XBPTT25	XBUTT4	XBPTT4	XBPT6 ①	XBPT4FBN ②	XBUT16	—	—	—	XBPT35 ①	—	—
XBUT6FBN ①	XBPTK	XB3UKA	XBPT4FBE ②	XBUK6	XBPT4FSI ②	XBTK	—	—	—	—	—	—
XBPT25 ①	XBPU25 ②	XB3UKF	XBQT25 ③	XBPT4FSI ①	—	XBUK50	—	—	—	—	—	—
XBPT4FBE ①	XBAP …	XBUT4FBE ②	XBQT25FBE ③	—	—	XBUK150	—	—	—	—	—	—
XBPU25 ①	XBQT15 ③	XBUT6FBN ②	XBQU25 ③	—	—	XBUK95	—	—	—	—	—	—
XBQT15 ①	XBQTT15	XBUK10	—	—	—	XBPT10 ①	—	—	—	—	—	—
XBQT25FBE ④	XBQU15 ③	XBUKK4	—	—	—	XBMKLMZ ⑤	—	—	—	—	—	—
XBQU15 ①	XBMPK15	XBPT4 ①	—	—	—	—	—	—	—	—	—	—
XBMUK25	XBMPKK15	XBPT4FBN ①	—	—	—	—	—	—	—	—	—	—
—	XBATCP…	XBQT25 ①	—	—	—	—	—	—	—	—	—	—
—	—	XBQT25FBE ①	—	—	—	—	—	—	—	—	—	—
—	—	XBQU25 ①	—	—	—	—	—	—	—	—	—	—
—	—	XBMUK4	—	—	—	—	—	—	—	—	—	—

Notes

① For center labeling.
② For external labeling.
③ For center and outside labeling.
④ For lever labeling.
⑤ Two (2) XBMZB10 tags fit in one (1) XBMKLMZ.

Marker Strips and Sheets (for use with plotter)

The ***XB*** Series marking system provides logical and clear identification of the modular terminal blocks and interface modules.

Product Selection

XBMZB_

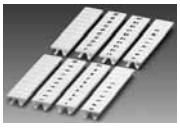

Marker Strips (Strip of 10)

Terminal Width	Standard Pack	Catalog Number
Blank Strips		
5.2 mm	10	**XBMZB5**
6.2 mm	10	**XBMZB6**
8.2 mm	10	**XBMZB8**
10.2 mm	10	**XBMZB10**
12 mm	10	**XBMZB12**
16 mm	10	**XBMZB15** ①
Flat Strips		
5.2 mm	10	**XBMZBF5**
6.2 mm	10	**XBMZBF6**
8.2 mm	10	**XBMZBF8**
10.2 mm	10	**XBMZBF10**
12 mm	10	**XBMZBF12**
16 mm	10	**XBMZBF15**

Marker Sheets (Strip of 10)

XBMPZB_

Terminal Width)	Color	Standard Pack	Catalog Number
Marker Sheets (10 rows of 12)			
5.2 mm	White	50	**XBMPZB5**
	Blue	50	**XBMPZB5BU**
	Red	50	**XBMPZB5RD**
	Yellow	50	**XBMPZB5YE**
	Green	50	**XBMPZB5GN**
Marker Sheets (10 rows of 10)			
6.2 mm	White	50	**XBMPZB6**
	Blue	50	**XBMPZB6BU**
	Red	50	**XBMPZB6RD**
	Yellow	50	**XBMPZB6YE**
	Green	50	**XBMPZB6GN**

XBMPZBF_

Flat Marker Sheets (10 rows of 10)			
5.2 mm	White	10	**XBMPZBF5**
	Orange	10	**XBMPZBF5OG**
	White	10	**XBMPZBF6**
	Orange	10	**XBMPZBF6OG**
	White	10	**XBMPZBF8**

Label Sheets for Laser Printers

The XBM labels have been specially developed for laser printers and have considerable advantages:

- Can be printed on all commercially available laser printers
- Or can use plotter or pen for printing
- Good adhesive properties
- A4 size
- XBMKL25X12WH designed to fit XBGBS2512 group marker
- XBMLMAL447 is perforated for terminal strip marker XBMGLMA and is 44 x 7 mm

Product Selection

XBM_

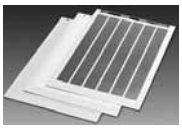

Label Sheets

Standard Pack	Catalog Number
10	**XBMKL25X12WH**
10	**XBMLMAL447**

Note

① All markers are strips of 10, except XBMZB15, which is a strip of 5.

Terminal Block Group Marking

Terminal block groups are marked using marking labels that are snapped into the marker strip groove of the terminal blocks. The group is marked using either labels or insert markers.

Product Selection

XBGBS2512

Terminal Block Group Marking ①

Standard Pack	Catalog Number
100	XBGBS2512

Terminal Strip Markers

Adjustable height for end bracket labeling.

Product Selection

XBM_

Terminal Strip Markers ①

Standard Pack	Catalog Number
20 x 8 mm Wide	
10	XBMKLM2
44 x 7 mm Wide	
10	XBMGLMA

Terminal Strip Marker Carriers

For labeling terminal groups, for mounting on DIN rail. Lettering field is 40 x 17 mm.

Product Selection

XBMUB_

Terminal Strip Marker Carriers

Standard Pack	Catalog Number
10	XBMUBE
10	XBMUBED

Insert Markers for Laser Printers

One sheet = 56 labels. Lettering field is 40 x 17 mm.

Product Selection

XBMUBEL4017

Insert Markers for XBMUBE(D)

Standard Pack	Catalog Number
10	XBMUBEL4017

Refillable Marker Pen

Refillable marker pen for manual labeling, line thickness 0.35 mm.

Product Selection

XBMXPEN

Terminal Strip Marker Pen ①

Standard Pack	Catalog Number
1	XBMXPEN

Non-Refillable Marker Pen

For manual labeling, line thickness 0.5 mm.

Product Selection

XBMUBE

Non-Refillable Marker Pen

Standard Pack	Catalog Number
1	XBMBSTIFT

Note

① See **Page V7-T8-101** for insert labels.

Testing Accessories

Test Adapter

For 4 mm diameter test plug and 4 mm diameter safety test plug. Makes contact in the bridge shaft.

Product Selection

XBATSPAI4

Test Adapter

Standard Pack	Catalog Number
1	**XBATSPAI4**

Modular Test Plugs

For individual assembly of test plug strips.

Product Selection

XBATS_

Modular Test Plugs

Standard Pack	Catalog Number
Test Plugs	
10	**XBATSPS5**
10	**XBATSPS6**
10	**XBATSPS8**
Spacer Plate	
10	**XBATSDPPS5**
10	**XBATSDPPS6**
10	**XBATSDPPS8**

Test Plugs

Consisting of metal part for socket hole and insulating sleeve.

Product Selection

Test Plugs

	Standard Pack		Catalog Number
XBATSMP_	**2.3 mm**		
	10	—	**XBATSMPSMT**
	10	Blue	**XBATSMPSIHBU**
	10	White	**XBATSMPSIHWH**
	10	Red	**XBATSMPSIHRD**
	10	Black	**XBATSMPSIHBK**
XBATSMP_	**4 mm**		
	10	—	**XBATSPSMT**
	10	Blue	**XBATSPSIHBU**
	10	White	**XBATSPSIHWH**
	10	Red	**XBATSPSIHRD**
	10	Black	**XBATSPSIHBK**

Separating Plates, Covers and Bridges

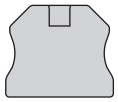

End Cover

Used to cover an open end of terminal block when changing sizes within an assembly and/or for last terminal block in a row.

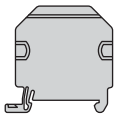

Partition Plate

Protrudes over the terminal block and is used to increase electrical clearance between terminals. Also provides visual indications of the functions of terminal blocks. For example, terminal blocks between two partition plates may provide an exact location for test points.

End Cover Segment

Covers protruding terminal block segments of three- and four-wire terminal blocks when next to a two wire blocks. This ensures that all is touch-proof and saves space over using a standard end cover.

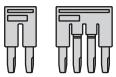

Jumper/Bridge

Provides the ability to electrically connect terminal blocks. Non-adjacent blocks may be bridged by snapping off the contact tabs of the standard bridge. The reducing bridge permits simple connection of terminal blocks with different nominal cross-sections.

Note

See these accessories as listed with terminal blocks for more information.

NEMA

Contents

Description	*Page*
NEMA	
C381 Series Terminal Blocks, Rail Mounted . .	**V7-T8-105**
TB Series Terminal Blocks, Modular	**V7-T8-109**

NEMA Overview

Product Description

NEMA terminal blocks provide a panel or DIN rail mount block that can be assembled from modular pieces. These blocks accommodate wire from 22 to 1/0 AWG and up to 175A and 600V.

Standards and Certifications

- UL File #E67464 and #E56797

C381 Series Terminal Blocks, Rail Mounted

Contents

Description	*Page*
C381 Series Terminal Blocks, Rail Mounted	
Product Selection	**V7-T8-106**
Accessories	**V7-T8-107**
Modifications	**V7-T8-107**
Technical Data and Specifications	**V7-T8-108**
Dimensions	**V7-T8-108**
TB Series Terminal Blocks, Modular	**V7-T8-109**

C381 Series Terminal Blocks, Rail Mounted

Product Description

- 600V
- Snap-fit nylon sections
  - Control circuit blocks
  - Power circuit blocks
  - Fuse blocks
  - Switch blocks
- Sections can be interlocked in any quantity and any mixture for direct panel mounting or channel mounting
- Three terminal choices in control circuit blocks, up to 32 circuits per foot
- Power circuit blocks for heavy-duty applications, up to 16 circuits per foot
- Fuse blocks accommodate any 0.406 x 1.5 in (10.3 x 38.1 mm) ferrule type cartridge fuse up to 30A
- Switch blocks have removable blade for extra safety

Standards and Certifications

- UL File #E67464

A Typical Mixture of Control Circuit Blocks, Power Blocks, Switch and Fuse Blocks in a Mounting Channel

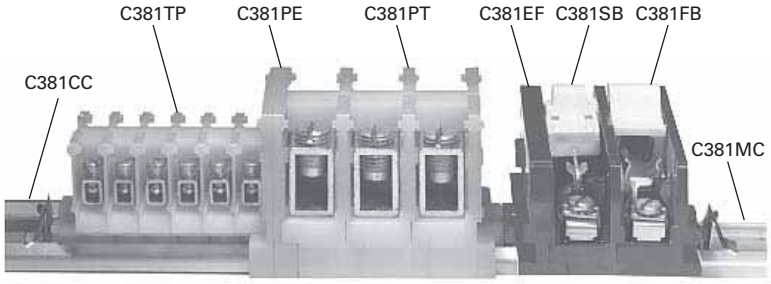

Product Selection

When Ordering Specify

Catalog number and quantity, which must be in a multiple of the available minimum standard package.

Examples:
- 200 Cat. No. C381ST
- 20 Cat. No. C381PT
- 100 Cat. No. C381CC

Catalog number and quantity of end sections also in minimum quantity standard package.

Example:
- 25 Cat. No. C381ES

Control, Power, Switch and Fuse Blocks ①

	Description	AWG Wire Size	Standard Pack ②	Catalog Number
	Control Circuit Terminal Blocks—Rated 50A			
C381ST	Type ST (screw terminal)	22–14 AWG	100	**C381ST**
C381TP	Type TP (tubular pressure plt)	22–10	100	**C381TP**
C381TS	Type TS (tubular screw) end section	18–8	100	**C381TS**
C381ES	End section	—	25	**C381ES**
	Power Circuit Terminal Blocks—Rated 155A			
C381PT	Type PT (tubular screw)	10–1/0	10	**C381PT**
C381PE	End section	—	10	**C381PE**
	Switch Blocks—Rated 15A and Fuse Blocks—Rated 30A			
C381SB	Switch blocks	18–8	10	**C381SB**
C381FB	Fuse blocks	18–8	10	**C381FB**
C381EF	End section	—	10	**C381EF**

Notes

① Available only in minimum quantity standard packages.

② Must be ordered in standard package quantity or in multiples of these quantities.

Accessories

C381 Series Terminal Blocks, Rail Mounted ①

Description	Standard Pack ②	Catalog Number
Aluminum mounting channel—6 ft (1.8m) lengths	25	**C381MC**
Screw type channel clamp (one required each end) ③	100	**C381VC**
Spring type channel clamp (one required each end) ③	100	**C381CC**
Vinyl marking strip—3/8 in x 25 ft (9.5 mm x 7.6m) coil	1	**C381MS**
Marking paper—pressure sensitive—5/16 x 11-11/16 in (7.9 x 296.9 mm), 24 strips/sheet	5 sheets	**C381MP**
Marking strip retainer (one required/grouping)		
For use on control circuit blocks	100	**C381SR**
For use on power circuit blocks	100	**C381SP**
Fanning strip—for type TP and/or TS	50	**C381TF**
Fanning strip—for type ST	50	**C381SF**
Terminal jumper (two-pole) ④	100	**C381TJ**
Ganging rod—1/8 in x 6 in (3.2 mm x 152.4 mm) ⑤	10	**C381GR**

Modifications

Pull Apart Terminal Blocks ①

Description	AWG Wire Size	Standard Pack ②	Catalog Number
One-pole stationary section (tubular pressure plt)	22–10	100	**C381PS**
Three-pole movable section (tubular pressure plt)	22–10	12	**C381PM**
End section	—	25	**C381ES**
Polarizing plug (promotes alignment of poles) ⑥	—	100	**C381PP**

Pull Apart Terminal Blocks

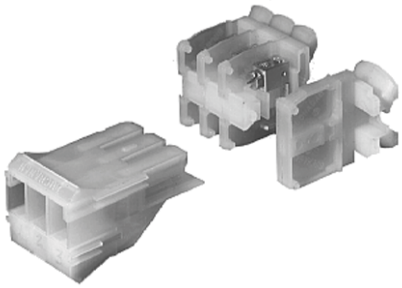

Illustrates: One–Three-Pole Movable Section, Three–One-Pole Stationary Sections and One–End Piece

Notes

① Available only in minimum quantity standard packages.
② Must be ordered in standard package quantity or in multiples of these quantities.
③ C381CC is a snap-in, one time use disposable type. C381VC can be readjusted or reused as desired.
④ For use on adjacent Type TP and/or TS control circuit sections.
⑤ May be used on section covers or to gang fuse and/or switch blocks.
⑥ L shaped plug installs in end of stationary section, Catalog Number C381PS, and prevents incorrect installation of movable section, Catalog Number C381PM.

Technical Data and Specifications

Formulas for Calculating Blocks and Channel Lengths

N = Number of Blocks

C381 Series Terminal Blocks, Rail Mounted

Description	Blocks Length
Control blocks and pull apart blocks	0.762 + (0.375 x N)
Power circuit blocks	0.812 + (0.750 x N)
Fuse and switch blocks	0.812 + (0.755 x N)
Mounting channel (minimum channel length)	0.75 + blocks length

Dimensions

Approximate Dimensions in Inches (mm)

C381 Series Terminal Blocks, Rail Mounted

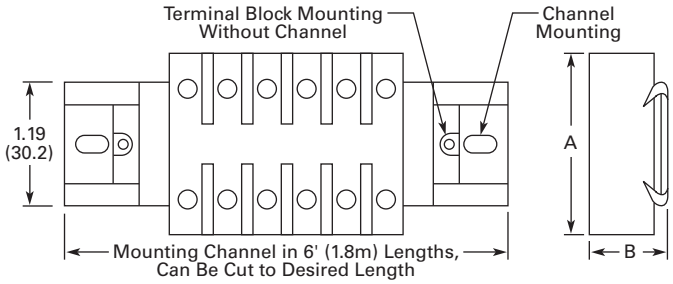

Block	A	B
Control circuit blocks	1.25 (31.8)	1.55 (39.4)
Power circuit blocks	1.75 (44.5)	2.00 (50.8)
Fuse blocks	2.75 (69.9)	2.00 (50.8)
Switch blocks	2.75 (69.9)	2.00 (50.8)
Pull apart blocks	1.88 (47.8)	2.75 (69.9)

TB Series Terminal Blocks, Modular

Contents

Description	*Page*
C381 Series Terminal Blocks, Rail Mounted	**V7-T8-105**
TB Series Terminal Blocks, Modular	
Product Selection	**V7-T8-110**
Accessories	**V7-T8-111**
Technical Data and Specifications	**V7-T8-112**
Dimensions	**V7-T8-113**

TB Series Terminal Blocks, Modular

Product Description

TBA and TBD modular terminal blocks are designed to conserve space, while allowing maximum flexibility and ease of installation. Available as one-, two- and three-pole circuits, simple and uniform installation is possible because their design is based on 5/8 in (15.9 mm) modules. Standard blocks are white nylon.

Breathing Action Clamping Collar

The unique design of the clamping collar permits the collar to breathe as the wire expands and contracts, maintaining a constant and permanent clamping pressure. This eliminates loose connections resulting from the gradual flattening of conductors and joint deterioration caused by heating and cooling cycles.

Features

Blocks—Design Features

- Compact design permits mounting 48–600V or 90–300V terminals per foot
- Fully shielded construction, 600V spacings
- Nylon construction provides anti-tracking and impact resistance
- TBA types are available in rail mounted, base mounted and power distribution types
- Terminal blocks easily snap on or off mounting rails; not necessary to disturb adjacent units
- No end pieces or backing plates are needed when rail mounting
- A 12 circuit subminiature blocks, rated 20A at 300V, is available for "high density" applications
- Popular blocks are also available in dual mount for use with standard TBA or 35 mm DIN rails

Terminals—Design Features

- Insulated walls of lug guide wire into lug
- Blocks are shipped with clamping screw backed out
- Constant locking torque keeps terminal screws in position
- Terminal screws are captive; cannot be lost in shipment or handling
- Hardened stainless steel clamping collar eliminates stripped threads
- Large opening in clamping collar accommodates oversized conductors; smallest collar will accept three 14 AWG stranded conductors

Standards and Certifications

- UL recognized: File No. E56797
- CE approved

Product Selection

TBA Modular Terminal Blocks

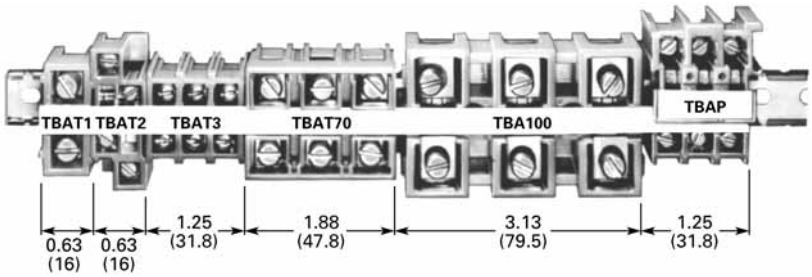

Rail and Base Mounted Terminal Blocks

Description	AWG Wire Size	Number of Poles	Ampacity (per Circuit) ①	Carton Quantity ②	TBA Rail Catalog Number	DIN Rail ③ Catalog Number
Rail Mounted—600V						
Subminiature blocks	(2) 14–12	12	5A	100	**TBDSM12** ④	**TBDSM12** ④
Miniature blocks	22–10	4	30A	100	**TBDV4**	**TBDV4**
Standard blocks—screw terminals with tang clamping collars	18–2	1	90A	100	—	**TBDT1**
	22–8	2	40A	100	**TBAT2**	—
	22–8	3	40A	20	**TBAT3-20**	**TBDT3-20**
	18–4	3	90A	100	**TBDT70**	**TBDT70**
High current blocks	14–2/0	3	175A	12	**TBA100** ⑤	—
Standard blocks—plug-in terminals	22–8	3	40A	20	**TBAP**	—
	18–4	3	70A	20	**TBAP70**	—
	14–8	3	40A	20	**TBAPL70**	—
Panel mount blocks	22–10	3	30A	100	**TBAL30**	—
	8–4	3	115A	12	**TBAL90**	—
Disconnect blocks—for 1/4 in (6.4 mm) dia. by 1–1-7/16 in (25.4–36.5 mm) fuse	22–8	1	30A	50	**TBAD**	—
Fuse blocks—for 13/32 in (10.3 mm) dia. by 1-1/2 in (38.1 mm) fuse	22–8	1	30A	50	**TBDTF**	**TBDTF**
Base Mounted—600V						
Miniature blocks—screw terminals with tang clamping collars	22–10	4	30A (600V)	90	**TBBT4**	—
Standard blocks—standard screw terminals	22–8	3	40A	80	**TBABT3**	—
Universal mounting blocks	8 maximum	4	50A ⑥	25	**TBU4**	—
	8 maximum	6	50A ⑥	60	**TBU6**	—
	8 maximum	8	50A ⑥	45	**TBU8**	—
	8 maximum	12	50A ⑥	35	**TBU12**	—

Notes

① Based on 50°C rise, test at 25°C ambient while using maximum wire size.
② Must be ordered in standard package quantity or in multiples of these quantities.
③ Dual mounting blocks—mount on either TMR/TBA rail or 35 mm DIN rail.
④ May also be mounted on mini-DIN rail (15 mm). Catalog Number C383TS15.
⑤ May also be base mounted.
⑥ TBU Series = 60A with crimped wire.

Accessories

TB Series Terminal Blocks, Modular

Description	Length ①	Number of Poles	Carton Quantity ②	Catalog Number
Mounting Rail				
Aluminum	12.5 (317.5)	—	25	**TMR12**
	37.5 (952.5)	—	25	**TMR37**
	72.0 (1828.8)	—	25	**TBATR72**
35 mm DIN—steel	1m	—	20	**MC382MA1-20**
Marking Strips				
Miniature blocks—TBDV4 and TBBT4	6.0 (152.4)	—	50	**TMS6**
TBU Series—matte finish	7.5 (190.5)	—	25	**TMSU**
All other blocks	12.5 (317.5)	—	50	**TMS**
Jumpers				
TBAT1 and TBAP70	—	2-pole	100	**TJ1**
TBAT2	—	2-pole	100	**TJ2**
TBAT3, TBABT3, TBAP and TBBP	—	2-pole	100	**TJ3**
TBDV4 and TBBT4	—	4-pole	100	**TJ4**
TBAD and TBATF	—	2-pole	100	**TJ5**
TBAL30	—	2-pole	100	**TJ6**
TBU	—	12-pole	10	**TJ7**
TBDT3	—	2-pole	100	**TJ8**
Miscellaneous				
End piece for TBABT3 and TBBP	—	—	50	**TAD**
Lug shield for TBA100 and TBAL90	—	—	50	**TAS**
Fuse puller	—	—	50	**TBP**
Lighted fuse puller—blown fuse indication	—	—	25	**TBLP**

Notes

① Length in inches (mm) except as noted.

② Must be ordered in standard package quantity or in multiples of these quantities.

Technical Data and Specifications

TB Series Terminal Blocks, Modular

Description	Specification
Continuous temperature	212°F (100°C)
Tensile strength	10,000–12,000 psi
Impact resistance	2.0 ft-lb/in (arc)
Arc resistance	140 seconds

- Chemical resistance to:
  - Acetone
  - Ammonia gas
  - Benzene
  - Gasoline
  - Mineral oil
  - Sodium bisulfate
  - Sodium chloride
  - Sodium nitrate
  - Water up to 50°C

Flashover Voltages

Catalog Number	Vac rms, 60 Hz Opposite Polarity	Vac rms, 60 Hz To Ground
TBAT1	9100	6600
TBAT2	9600	7300
TBAT3	8600	7300

Recommended Terminal Tightening Torque

Wire Size	Torque
Up to 8 AWG	20 lb-in
Up to 4 AWG	35 lb-in
Up to 2/0 AWG	50 lb-in

To find a current rating, place a straight edge horizontally at the value of anticipated maximum internal panel ambient (scale on the left), and read the current rating for the device on the bottom scale. *Example:* at 60°C, TBAT3 is rated 54 amperes.

Ampere rating is based on maximum allowable temperature—ambient temperature plus temperature rise due to current.

Ratings based on 90°C total temperature of a three-pole block with each pole carrying current and wired with largest size conductors.

Temperature Rating

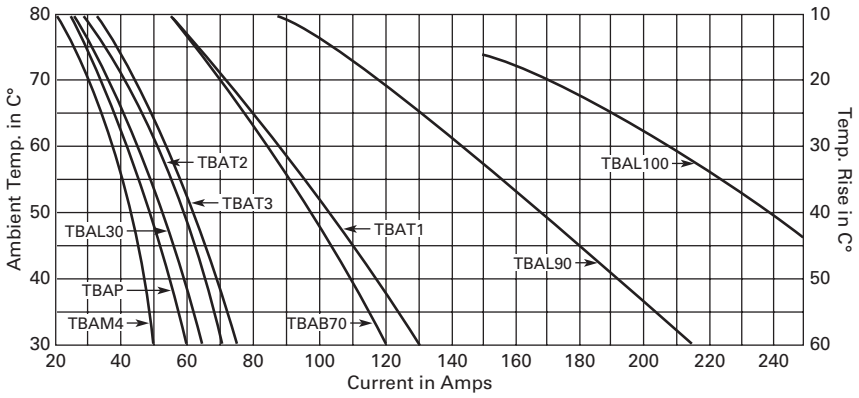

Dimensions

Approximate Dimensions in Inches (mm)

TB Series Terminal Blocks, Modular

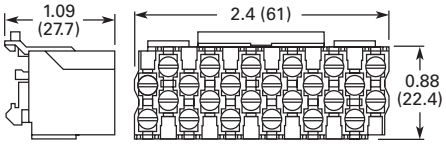

TBDSM12

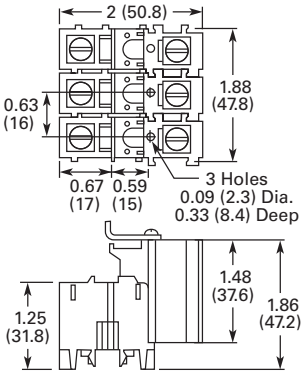

TBAP70 & TBAPL70

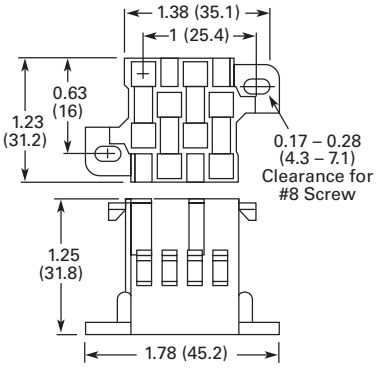

TBBT4

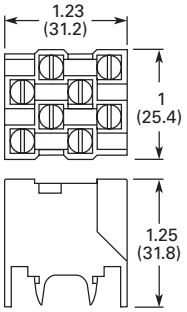

TBDV4

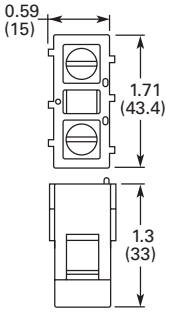

TBDT1

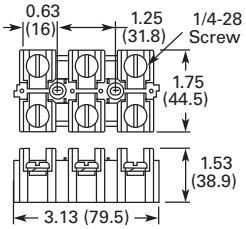

TBAL90

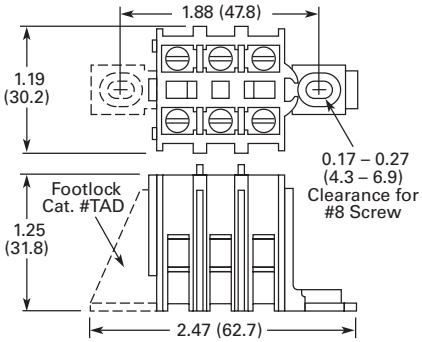

TBABT3

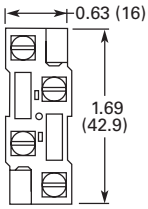

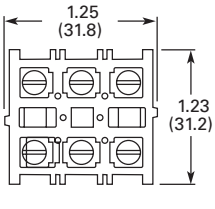

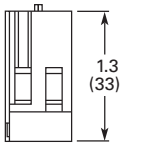

TBAT2

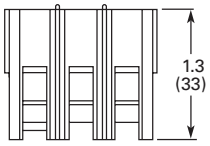

TBAT3 & TBDT3

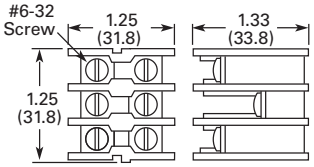

TBAL30

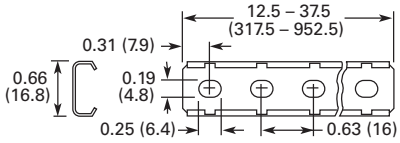

TMR12 & TMR37

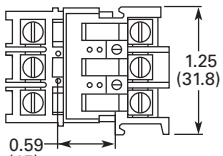

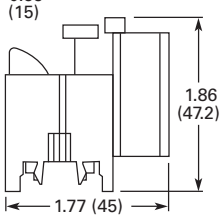

TBAP

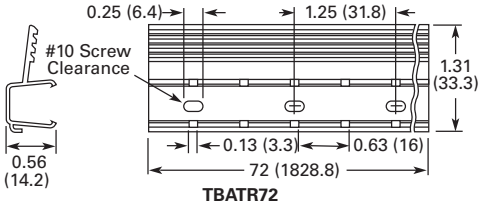

TBATR72

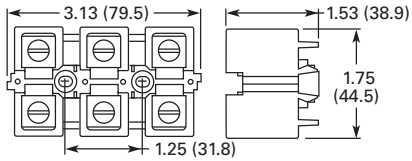

TBA100

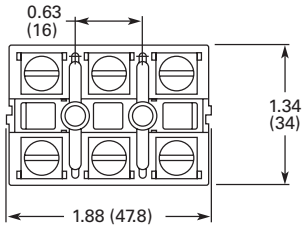

TBDT70

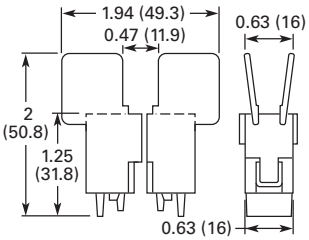

TBAD & TBDTF

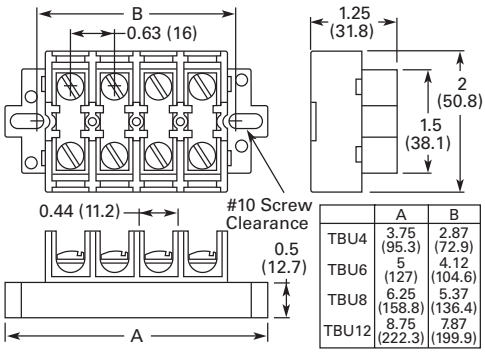

	A	B
TBU4	3.75 (95.3)	2.87 (72.9)
TBU6	5 (127)	4.12 (104.6)
TBU8	6.25 (158.8)	5.37 (136.4)
TBU12	8.75 (222.3)	7.87 (199.9)

TBU4, TBU6, TBU8 & TBU12

Power Distribution Products

Contents

Description ***Page***

Power Distribution
- CHDB Series—Power Distribution Blocks **V7-T8-115**
- CH160 Series—Power Terminal Blocks **V7-T8-121**
- Power Terminal Block Accessories **V7-T8-124**

Power Distribution Overview

Product Selection Guide

Series	Current Range	UL Certification	High Short Circuit Current Rating ①	UL 508A Approved for Industrial Control Panels		
				Branch Circuits	Feeder Circuits	HVAC UL 1995
CH162	115–175A	UL 1059 Recognized	No	Yes	No ②	Yes
CH163	175–420A	UL 1059 Recognized	No	Yes	No ②	Yes
CH165	620–840A	UL 1059 Recognized	No	Yes	No ②	Yes
CHDB	175–570A	UL 1953 Listed	Yes	Yes	Yes	Yes

Notes

① Refer to **Page V7-T8-116** to determine short circuit current ratings with fuses and **Pages V7-T8-117** and **V7-T8-118** to determine short circuit current ratings in conjunction with specific Eaton circuit breakers.

② Single-pole units, when installed with proper spacings, may meet requirements for UL 508A feeder circuits.

CHDB Series—Power Distribution Blocks, Enclosed and Open

Contents

Description	*Page*
CHDB Series—Power Distribution Blocks	
Product Selection	**V7-T8-116**
Technical Data and Specifications	**V7-T8-116**
Dimensions	**V7-T8-119**
CH160 Series—Power Terminal Blocks	**V7-T8-121**
Power Terminal Block Accessories	**V7-T8-124**

CHDB Series—Power Distribution Blocks

Product Description

Eaton's CHDB Series of Power Distribution Blocks was designed for high short circuit current rating (SCCR) applications up to 200,000 amperes. They are assembled with the minimum spacing to meet UL 1953 requirements for feeder circuits in UL 508A industrial control panels, and provide significant wiring flexibility.

Available in three-pole open style and single-pole enclosed style with a variety of terminal arrangements and current-carrying capability up to 570 amperes.

Features and Benefits

Enclosed Style

- IP20 finger-safe enclosure
- 600 Vac or Vdc (UL 1953), 690 Vac or Vdc
- DIN rail or panel mount
- Captive termination screws prevent lost screws
- Single-pole, gang mountable for multi-pole applications
- Tin plated Al connections suitable for Cu conductors
- Flammability, UL 94V-0

Open Style

- 600 Vac or Vdc (UL 1953)
- Panel mount
- Three-pole open design for easy wiring
- Tin-plated Al connections suitable for Cu conductors
- Flammability, UL 94V-0
- Available covers for additional protection (does not meet IP20)

Standards and Certifications

- UL Listed 1953, Guide QPQS, File E256146
- CSA Certified, Class 6228-01, File 15364 (enclosed style)
- CE Component IEC 60947-7-1 (enclosed style)
- IEC 60529, IP20 (finger-safe) under specific wiring conditions (enclosed style)

Listed

Product Selection

CHDB Series—Power Distribution Blocks

	Line Connection	Load Connection	Configuration	Amperes	Style	Poles	Catalog Number
CHDB2203 (Open)	2/0–#8 AWG	(4) #4–#14 AWG		175	Open	3	**CHDB2203**
	2/0–#8 AWG	(6) #4–#14 AWG	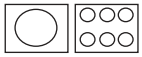	175	Open	3	**CHDB3213**
	300 kcmil–#4 AWG	(6) #4–#12 AWG		310	Open	3	**CHDB3233**
	300 kcmil–#4 AWG	(12) #4–#14 AWG	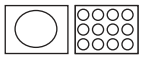	310	Open	3	**CHDB3703**
	300 kcmil–#4 AWG	(6) #2–#12 AWG	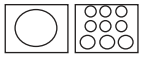	310	Open	3	**CHDB3713**
		(3) 1/0–#12 AWG		310	Open	3	**CHDB3713**
CHDB204F (Enclosed)	2/0–#8 AWG	2/0–#8 AWG		175	Enclosed ①	1	**CHDB204F**
	500 kcmil–#6 AWG	(6) #2–#14 AWG		380	Enclosed ①	1	**CHDB330F**
	300 kcmil–#4 AWG	(12) #4–#14 AWG	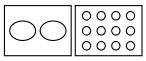	570	Enclosed ①	1	**CHDB377F**

Technical Data and Specifications

Power Terminal Block Short-Circuit Current Ratings (SCCR) with Fuses

Catalog Number	Terminal Copper Conductors Line	Terminal Copper Conductors Load	Maximum Fuse Class and Amperes J LPJ	T JJS/JJN	RK-1 LPS-RK/LPN-RK	RK-5 FRS-R/FRN-R	SCCR (kA)
CHDB2203	2/0–#8 AWG	#4–#12 AWG	200	200	200	60	200
		#4–#14 AWG	175	175	100	60	100
			200	200	100	60	50
CHDB3213	2/0–#8 AWG	#4–#12 AWG	400	400	200	100	200
			400	400	400	100	100
		#4–#14 AWG	175	175	100	60	100
CHDB3233	300 kcmil–#4 AWG	#4–#8 AWG	400	400	200	100	200
			400	400	400	100	100
		#4–#12 AWG	175	175	100	60	100
CHDB3703	300 kcmil–#4 AWG	#4–#8 AWG	400	400	200	100	200
		#4–#14 AWG	400	400	400	100	100
			175	175	100	60	100
CHDB3713	300 kcmil–#4 AWG	1/0–#6 AWG	400	400	200	100	200
		#4–#12 AWG	400	400	400	100	100
			175	175	100	60	100
CHDB204F	2/0–#8 AWG	2/0–#8 AWG	200	200	100	60	200
CHDB330F	500 kcmil–#6 AWG	#2–#6 AWG	400	400	200	100	200
		#2–#14 AWG	200	200	100	30	50
			175	175	100	30	100
CHDB377F	300 kcmil	#4–#8 AWG	600	600	400	200	200
	300 kcmil–#4 AWG	#4 AWG	600	600	400	200	50
		#4–#14 AWG	200	200	100	30	50

Note

① Finger-safe.

Power Terminal Block Short-Circuit Ratings (SCCR) for UL 508A Applications with Circuit Breakers

Catalog Number	Description	Enclosure Size in Inches (mm)	Current Rating	Opening per Pole Line	Opening per Pole Load	Line Conductors Cu	Load Conductors Cu	SCCR @ 480V (Load Side)	Eaton Breaker	Available Breaker Current Ratings
CHDB2203	Feeder Listed Open PDB	16.00 x 16.00 x 6.75 (406.4 x 406.4 x 171.5)	175			2/0–#8	#4–#10 #12 #14	18 kA 18 kA 14 kA	EGB125	15, 20, 25, 30, 35, 40, 45, 50, 60, 70, 80, 90, 100, 125
CHDB2203	Feeder Listed Open PDB	16.00 x 16.00 x 6.75 (406.4 x 406.4 x 171.5)	175			2/0–#8	#4–#10 #12 #14	25 kA 22 kA 14 kA	EGE125	15, 20, 25, 30, 35, 40, 45, 50, 60, 70, 80, 90, 100, 125
CHDB2203	Feeder Listed Open PDB	16.00 x 16.00 x 6.75 (406.4 x 406.4 x 171.5)	175			2/0–#8	#4–#10 #12 #14	50 kA 22 kA 14 kA	EGS125	15, 20, 25, 30, 35, 40, 45, 50, 60, 70, 80, 90, 100, 125
CHDB2203	Feeder Listed Open PDB	16.00 x 16.00 x 6.75 (406.4 x 406.4 x 171.5)	175			2/0–#8	#4–#10 #12 #14	65 kA 22 kA 14 kA	EGH125	15, 20, 25, 30, 35, 40, 45, 50, 60, 70, 80, 90, 100, 125
CHDB2203	Feeder Listed Open PDB	16.00 x 16.00 x 6.75 (406.4 x 406.4 x 171.5)	175			2/0–#8	#4–#10 #12 #14	65 kA 22 kA 14 kA	EGC125 ①	15, 20, 25, 30, 35, 40, 45, 50, 60, 70, 80, 90, 100, 125
CHDB3213	Feeder Listed Open PDB	24.00 x 20.00 x 6.75 (609.6 x 508.0 x 171.5)	175			2/0–#8	#4–#10 #12 #14	18 kA 18 kA 18 kA	EGB125	15, 20, 25, 30, 35, 40, 45, 50, 60, 70, 80, 90, 100, 125
CHDB3213	Feeder Listed Open PDB	24.00 x 20.00 x 6.75 (609.6 x 508.0 x 171.5)	175			2/0–#8	#4–#10 #12 #14	25 kA 22 kA 18 kA	EGE125	15, 20, 25, 30, 35, 40, 45, 50, 60, 70, 80, 90, 100, 125
CHDB3213	Feeder Listed Open PDB	24.00 x 20.00 x 6.75 (609.6 x 508.0 x 171.5)	175			2/0–#8	#4–#10 #12 #14	50 kA 22 kA 18 kA	EGS125	15, 20, 25, 30, 35, 40, 45, 50, 60, 70, 80, 90, 100, 125
CHDB3213	Feeder Listed Open PDB	24.00 x 20.00 x 6.75 (609.6 x 508.0 x 171.5)	175			2/0–#8	#4–#10 #12 #14	65 kA 22 kA 18 kA	EGH125	15, 20, 25, 30, 35, 40, 45, 50, 60, 70, 80, 90, 100, 125
CHDB3213	Feeder Listed Open PDB	24.00 x 20.00 x 6.75 (609.6 x 508.0 x 171.5)	175			2/0–#8	#4–#10 #12 #14	65 kA 22 kA 18 kA	EGC125 ①	15, 20, 25, 30, 35, 40, 45, 50, 60, 70, 80, 90, 100, 125
CHDB204F	Feeder Listed Enclosed PDB	16.00 x 16.00 x 6.75 (406.4 x 406.4 x 171.5)	175			2/0–#8	2/0–#8	18 kA	EGB125	15, 20, 25, 30, 35, 40, 45, 50, 60, 70, 80, 90, 100, 125
CHDB204F	Feeder Listed Enclosed PDB	16.00 x 16.00 x 6.75 (406.4 x 406.4 x 171.5)	175			2/0–#8	2/0–#8	25 kA	EGE125	15, 20, 25, 30, 35, 40, 45, 50, 60, 70, 80, 90, 100, 125
CHDB204F	Feeder Listed Enclosed PDB	16.00 x 16.00 x 6.75 (406.4 x 406.4 x 171.5)	175			2/0–#8	2/0–#8	35 kA	EGS125	15, 20, 25, 30, 35, 40, 45, 50, 60, 70, 80, 90, 100, 125
CHDB204F	Feeder Listed Enclosed PDB	16.00 x 16.00 x 6.75 (406.4 x 406.4 x 171.5)	175			2/0–#8	2/0–#8	65 kA	EGH125	15, 20, 25, 30, 35, 40, 45, 50, 60, 70, 80, 90, 100, 125
CHDB204F	Feeder Listed Enclosed PDB	16.00 x 16.00 x 6.75 (406.4 x 406.4 x 171.5)	175			2/0–#8	2/0–#8	65 kA	EGC125 ①	15, 20, 25, 30, 35, 40, 45, 50, 60, 70, 80, 90, 100, 125
CHDB3233	Feeder Listed Open PDB	24.00 x 20.00 x 6.75 (609.6 x 508.0 x 171.5)	310			350 kmil–#4	#4–#6 #8 #10	25 kA 25 kA 14 kA	JGE250	70, 90, 100, 125, 150, 175, 200, 225, 250
CHDB3233	Feeder Listed Open PDB	24.00 x 20.00 x 6.75 (609.6 x 508.0 x 171.5)	310			350 kmil–#4	#4–#6 #8 #10	35 kA 35 kA 14 kA	JGS250	70, 90, 100, 125, 150, 175, 200, 225, 250
CHDB3233	Feeder Listed Open PDB	24.00 x 20.00 x 6.75 (609.6 x 508.0 x 171.5)	310			350 kmil–#4	#4–#6 #8 #10	65 kA 42 kA 14 kA	JGH250	70, 90, 100, 125, 150, 175, 200, 225, 250
CHDB3233	Feeder Listed Open PDB	24.00 x 20.00 x 6.75 (609.6 x 508.0 x 171.5)	310			350 kmil–#4	#4–#6 #8 #10	65 kA 42 kA 25 kA	JGC250 ①	70, 90, 100, 125, 150, 175, 200, 225, 250

Note

① This breaker frame is marked current limiting and suitable for use as current limiting per UL 508A SB.4.3.2.

Power Terminal Block Short-Circuit Ratings (SCCR) for UL 508A Applications with Circuit Breakers, continued

Catalog Number	Description	Enclosure Size in Inches (mm)	Current Rating	Opening per Pole Line	Opening per Pole Load	Line Conductors Cu	Load Conductors Cu	SCCR at 480V (Load Side)	Eaton Breaker	Available Breaker Current Ratings
CHDB3703	Feeder Listed Open PDB	24.00 x 20.00 x 6.75 (609.6 x 508.0 x 171.5)	310			350 kmil–#4	#4–#6 #8 #10	25 kA 25 kA 14 kA	JGE250	70, 90, 100, 125, 150, 175, 200, 225, 250
CHDB3703	Feeder Listed Open PDB	24.00 x 20.00 x 6.75 (609.6 x 508.0 x 171.5)	310			350 kmil–#4	#4–#6 #8 #10	35 kA 35 kA 14 kA	JGS250	70, 90, 100, 125, 150, 175, 200, 225, 250
CHDB3703	Feeder Listed Open PDB	24.00 x 20.00 x 6.75 (609.6 x 508.0 x 171.5)	310			350 kmil–#4	#4–#6 #8 #10	65 kA 42 kA 14 kA	JGH250	70, 90, 100, 125, 150, 175, 200, 225, 250
CHDB3703	Feeder Listed Open PDB	24.00 x 20.00 x 6.75 (609.6 x 508.0 x 171.5)	310			350 kmil–#4	#4–#6 #8 #10	65 kA 42 kA 25 kA	JGC250 ①	70, 90, 100, 125, 150, 175, 200, 225, 250
CHDB3713	Feeder Listed Open PDB	24.00 x 20.00 x 6.75 (609.6 x 508.0 x 171.5)	310			350 kmil–#4	#4–#6 #8 #10	25 kA 25 kA 14 kA	JGE250	70, 90, 100, 125, 150, 175, 200, 225, 250
CHDB3713	Feeder Listed Open PDB	24.00 x 20.00 x 6.75 (609.6 x 508.0 x 171.5)	310			350 kmil–#4	#4–#6 #8 #10	35 kA 35 kA 14 kA	JGS250	70, 90, 100, 125, 150, 175, 200, 225, 250
CHDB3713	Feeder Listed Open PDB	24.00 x 20.00 x 6.75 (609.6 x 508.0 x 171.5)	310			350 kmil–#4	#4–#6 #8 #10	50 kA 42 kA 14 kA	JGH250	70, 90, 100, 125, 150, 175, 200, 225, 250
CHDB3713	Feeder Listed Open PDB	24.00 x 20.00 x 6.75 (609.6 x 508.0 x 171.5)	310			350 kmil–#4	#4–#6 #8 #10	65 kA 50 kA 25 kA	JGC250 ①	70, 90, 100, 125, 150, 175, 200, 225, 250
CHDB330F	Feeder Listed Enclosed PDB	24.00 x 20.00 x 6.75 (609.6 x 508.0 x 171.5)	380			500 kmil–#3	#2–#8	14 kA	LGE400	250, 300, 350, 400
CHDB330F	Feeder Listed Enclosed PDB	24.00 x 20.00 x 6.75 (609.6 x 508.0 x 171.5)	380			500 kmil–#3	#2–#8	14 kA	LGS400	250, 300, 350, 400
CHDB330F	Feeder Listed Enclosed PDB	24.00 x 20.00 x 6.75 (609.6 x 508.0 x 171.5)	380			500 kmil–#3	#2–#8	14 kA	LGH400	250, 300, 350, 400
CHDB330F	Feeder Listed Enclosed PDB	24.00 x 20.00 x 6.75 (609.6 x 508.0 x 171.5)	380			500 kmil–#3	#2–#8	25 kA	LGC400 ①	250, 300, 350, 400
CHDB377F	Feeder Listed Enclosed PDB	24.00 x 20.00 x 6.75 (609.6 x 508.0 x 171.5)	570			(2) 300 kmil–#2	#4 #6 #8	30 kA 18 kA 14 kA	LGE600	250, 300, 350, 400, 500, 600
CHDB377F	Feeder Listed Enclosed PDB	24.00 x 20.00 x 6.75 (609.6 x 508.0 x 171.5)	570			(2) 300 kmil–#2	#4 #6 #8	30 kA 18 kA 14 kA	LGS600	250, 300, 350, 400, 500, 600
CHDB377F	Feeder Listed Enclosed PDB	24.00 x 20.00 x 6.75 (609.6 x 508.0 x 171.5)	570			(2) 300 kmil–#2	#4 #6 #8	30 kA 18 kA 14 kA	LGH600	250, 300, 350, 400, 500, 600
CHDB377F	Feeder Listed Enclosed PDB	24.00 x 20.00 x 6.75 (609.6 x 508.0 x 171.5)	570			(2) 300 kmil–#2	#4 #6 #8	42 kA 35 kA 14 kA	LGC600 ①	250, 300, 350, 400, 500, 600

Note

① This breaker frame is marked current limiting and suitable for use as current limiting per UL 508A SB.4.3.2.

Dimensions

Approximate Dimensions in Inches (mm)

CHDB2203

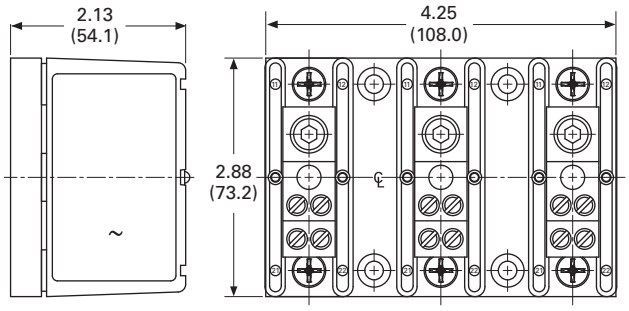

CHDB3713

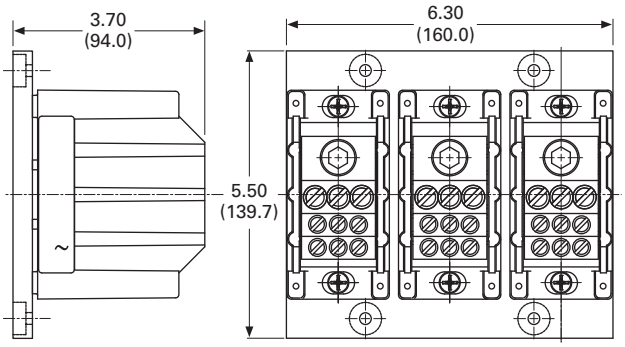

CHDB3213

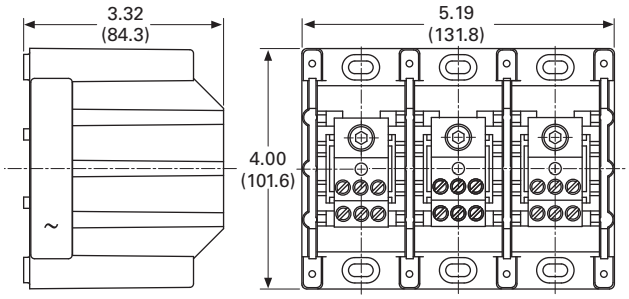

CHDB204F

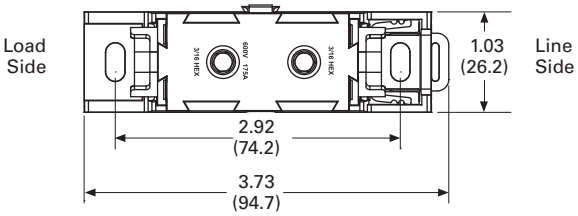

CHDB3233

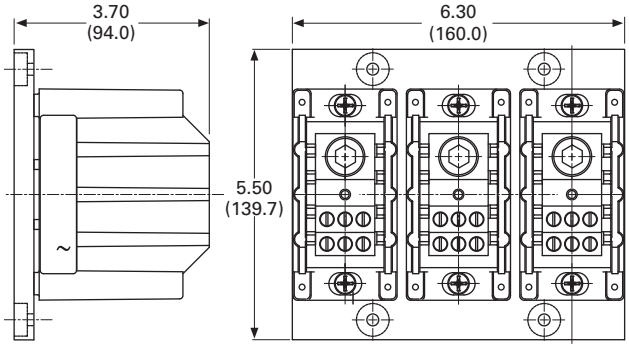

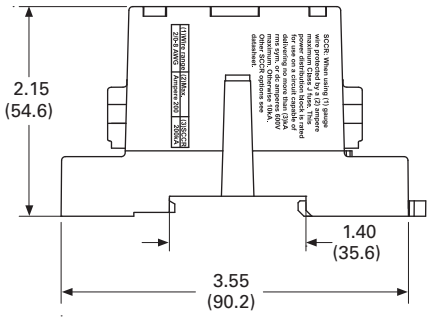

CHDB3703

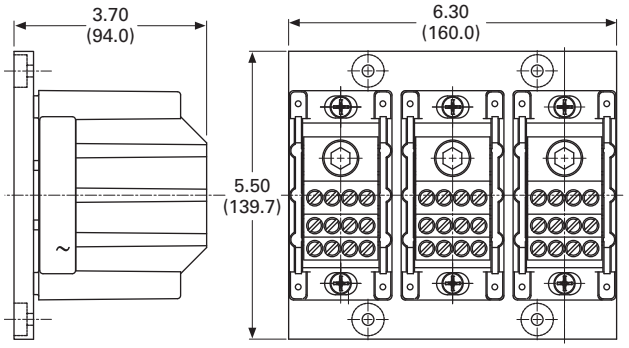

Approximate Dimensions in Inches (mm)

CHDB330F

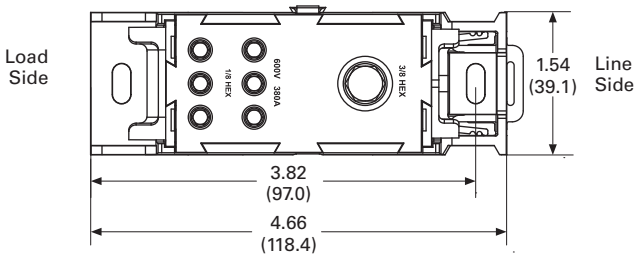

CHDB377F

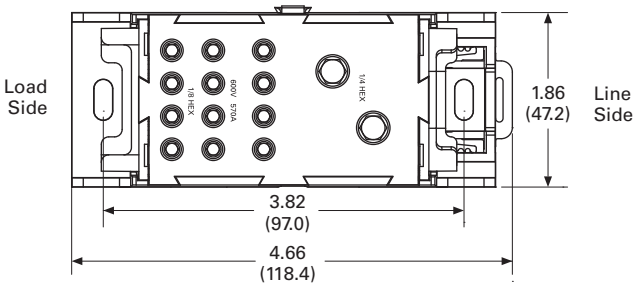

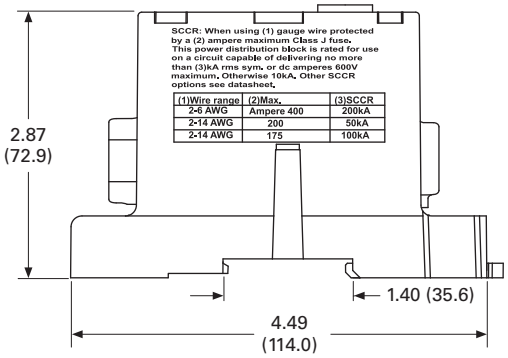

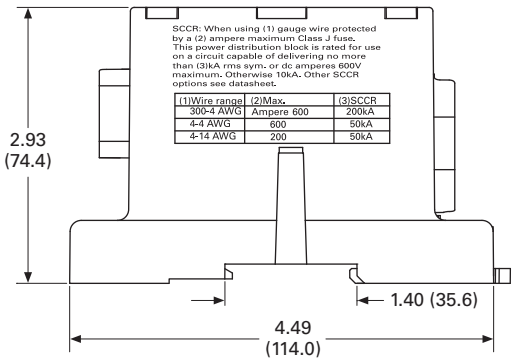

CH160 Series—Power Terminal Blocks

Contents

Description	*Page*
CHDB Series—Power Distribution Blocks	**V7-T8-115**
CH160 Series—Power Terminal Blocks	
Product Selection	**V7-T8-122**
Technical Data and Specifications	**V7-T8-123**
Dimensions	**V7-T8-123**
Power Terminal Block Accessories	**V7-T8-124**

CH160 Series—Power Terminal Blocks

Product Description

The CH160 Series of Power Terminal Blocks are UL 1059 recognized power terminal blocks for branch circuit applications. All short circuit current ratings (SCCR) are 10 kA per UL 508A Table SB4.1. The blocks are available in a wide variety of wiring configurations, providing excellent flexibility.

Features and Benefits

- Ratings: To 840A, 600V
- Materials
  - Molded material; black, UL rated 94V-0 thermoplastic
- Operating temperature: 302°F (150°C)
- Optional cover: See **Page V7-T8-123**

Standards and Certifications

- UL Recognized
- CSA Certified

Product Selection

When Ordering, Specify

- Catalog number
- Number of poles (up to three-pole available)

CH160 Power Terminal Blocks—CH162 Series

Line Connection	Load Connection	Connector Material and Ampacity	Catalog Number ①
#2–#14 Cu/#8 Al	#2–#14 Cu/#8 Al	Al 115A	**CH16200_**
1/0–#14 Cu	1/0–#14 Cu	Cu 150A	**CH16201_**
2/0–#8 Cu/Al	2/0–#8 Cu/Al	Al 175A	**CH16204_**
2/0–#14 Cu/#8 Al	(4) #4–#14 Cu/#8 Al	Al 175A	**CH16220_**

CH160 Power Terminal Blocks—CH163 Series

Line Connection	Load Connection	Connector Material and Ampacity	Catalog Number ①
250 kcmil-#6 Cu	250 kcmil-#6 Cu	Cu 255A	**CH16301_**
350 kcmil-#6 Cu/Al	350 kcmil-#6 Cu/Al	Al 310A	**CH16303_**
500 kcmil-#6 Cu/Al	500 kcmil-#6 Cu/Al	Al 380A	**CH16306_**
2/0–#14 Cu/Al	(6) #4–#14 Cu/#8 Al	Al 175A	**CH16321_**
350 kcmil-#6 Cu/Al	(6) #4–#14 Cu/#8 Al	Al 310A	**CH16323_**
(2) 2/0–#14 Cu/#8 Al	(6) #4–#14 Cu/#8 Al	Al 350A	**CH16325_**
500 kcmil-#6 Cu/Al	(6) #2–#14 Cu/#8 Al	Al 380A	**CH16330_**
350 kcmil-#6 Cu/Al	(3) #2–#14 Cu/#8 Al	Al 310A	**CH16332_**
	(2) 1/0–#14 Cu/#8 Al	Al 310A	**CH16332_**
350 kcmil-#6 Cu/Al	(12) #4–#14 Cu/#8 Al	Al 310A	**CH16370_**
350 kcmil-#6 Cu/Al	(6) #2–#14 Cu/#8 Al	Al 310A	**CH16371_**
	(3) 1/0–#14 Cu/#8 Al	Al 310A	**CH16371_**
350 kcmil-#6 Cu/Al	(21) #10–#14 Cu/#10 Al	Al 310A	**CH16372_**
350 kcmil-#6 Cu/Al	(3) 1/0–#14 Cu/#8 Al	Al 310A	**CH16373_**
	(14) #10–#14 Cu/#8 Al	Al 310A	**CH16373_**
600 kcmil-#2 Cu/Al	(12) #4–#14 Cu/#8 Al	Al 420A	**CH16375_**
600 kcmil-#2 Cu/Al	(6) #2–#14 Cu/#8 Al	Al 420A	**CH16376_**
	(3) 1/0–#14 Cu/#8 Al	Al 420A	**CH16376_**

CH160 Power Terminal Blocks—CH165 Series

Line Connection	Load Connection	Connector Material and Ampacity	Catalog Number ①
(2) 350 kcmil-4 Cu/Al	(2) 350 kcmil-4 Cu/Al	Al 620A	**CH16500_**
(2) 500 kcmil-#6 Cu/Al	(2) 500 kcmil-#6 Cu/Al	Al 760A	**CH16504_**
(2) 600 kcmil-#2 Cu/Al	(4) 3/0–#8 Cu/Al	Al 840A	**CH16528_**
	(4) #4–#14 Cu/#8 Al	Al 840A	**CH16528_**
(2) 500 kcmil-#6 Cu/Al	(12) #4–#14 Cu/#8 Al	Al 760A	**CH16530_**

Note

① Incomplete catalog number—add code suffix **-1**, **-2**, **-3** for number of poles.
Example: For a 150A 1/0-#14 Cu to 1/0-#14 Cu three-pole PDB, order CH16201-**3**.

Technical Data and Specifications

CH160 Power Terminal Blocks

Description	Specification
Ratings	To 840A, 600V
Materials	Molded material; black, UL rated 94V-0 thermoplastic
Operating temperature	302°F (150°C)

Note: For optional cover, see Power Terminal Block Accessories, **Page V7-T8-124**.

Dimensions

Approximate Dimensions in Inches (mm)

Series CH163 (Single-, Two- and Three-Pole Available)

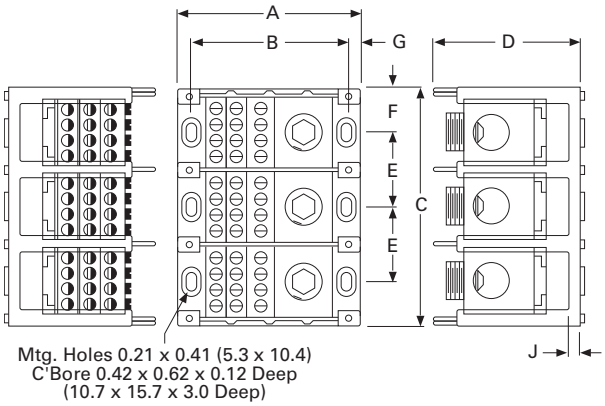

Series CH162 and CH165 (Single-, Two- and Three-Pole Available)

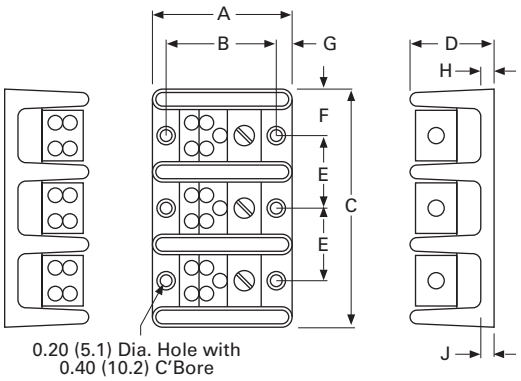

CH160 Power Terminal Block Dimensions

Series	A	B	C Single-Pole	C Two-Pole	C Three-Pole	D	E4	F	G	H	J
CH162	2.87 (72.9)	2.25 (57.2)	1.06 (26.9)	1.87 (47.5)	2.68 (68.1)	1.75 (44.5)	0.81 (20.6)	0.53 (13.5)	0.31 (7.9)	0.84 (21.3)	0.31 (7.9)
CH163	4.00 (101.6)	3.37 (85.6)	1.96 (49.8)	3.58 (90.9)	5.20 (132.1)	3.32 (84.3)	1.62 (41.1)	0.97 (24.6)	0.31 (7.9)	0.87 (22.1)	0.35 (8.9)
CH165	5.50 (139.7)	4.75 (120.7)	3.12 (79.2)	5.81 (147.6)	8.50 (215.9)	3.12 (79.2)	2.68 (68.1)	1.56 (39.6)	0.37 (9.4)	1.37 (34.8)	0.62 (15.7)

Power Terminal Block Accessories

Contents

Description	*Page*
CHDB Series—Power Distribution Blocks	**V7-T8-115**
CH160 Series—Power Terminal Blocks	**V7-T8-121**
Power Terminal Block Accessories	
Technical Data and Specifications	**V7-T8-125**
Dimensions	**V7-T8-125**

Power Terminal Block Accessories

Product Description

Protective Cover

- Guards against accidental contact
- Clear with write-on surface for field termination identification
- Available in single-, two- and three-pole

Standards and Certifications

TB Series Power Blocks

- Contact Eaton for the latest UL 508A short circuit ratings on terminal blocks
- UL Recognized: File No. E62622
- CSA Certified: File No. LR15364

Product Selection

When Ordering, Specify

- Catalog number

CH163 Series Cover

Description	Catalog Number
Single-pole cover	**CHCPDB-1** ①
Two-pole cover	**CHCPDB-2** ①
Three-pole cover	**CHCPDB-3** ①

TB Series Power Blocks

Line Connection	Load Connection	Catalog Number
#300 kcmil-#6 Cu/Al	(6) #6–#14 Cu/#8Al	**TBAN63**

Note

① Standard pack, five pieces.

Technical Data and Specifications

TB Series Power Blocks

Description	Specification
Ratings	285A, 600V; UL/CSA
Materials	Molded material; black, UL rated 94V-2 thermoplastic
Operating temperature	257°F (125°C)

Dimensions

Approximate Dimensions in Inches (mm)

CH163 Series Cover

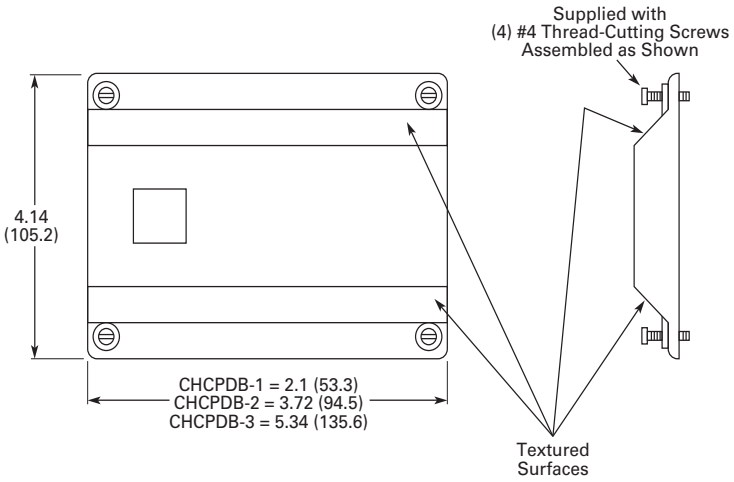

TB Series Power Blocks

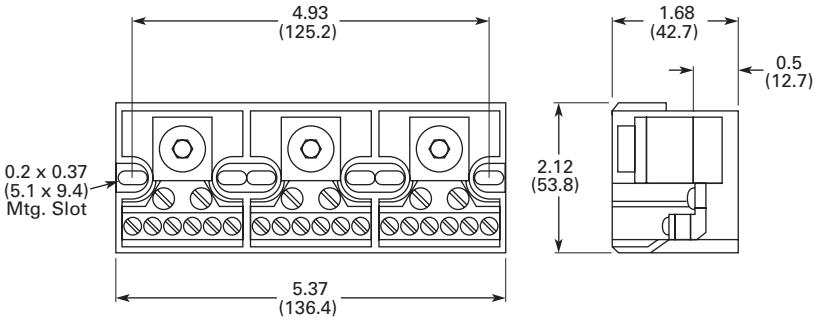

Fuse Blocks and Fuse Holders

Contents

Description ***Page***

Fuse Blocks and Fuse Holders
C383 Series Disconnect Fuse Holders **V7-T8-127**
C350 Series Fuse Blocks and W Series Fuse Holders. **V7-T8-129**

Fuse Blocks and Fuse Holders Overview

Product Description

Available in compact finger safe (C383) and an open (C350) design. Eaton's fuse blocks and holders provide a simple DIN mounting device for protection in control circuits.

Application Description

Fuse holders and blocks available for Class CC, midget, H, M and R.

Standards and Certifications

- UL listed
- CSA certified
  (may not apply to all styles)

Listed

C383 Series Fuse Holders

Contents

Description	*Page*
C383 Series Disconnect Fuse Holders	
Product Selection	**V7-T8-128**
Accessories	**V7-T8-128**
Technical Data and Specifications	**V7-T8-128**
Dimensions	**V7-T8-128**
C350 Series Fuse Blocks and W Series Fuse Holders	**V7-T8-129**

C383 Series Disconnect Fuse Holders

Product Description

Eaton's C383 Series disconnect fuse holders offer 600V fused circuit protection and subsequently "no load" switching.

These compact disconnects are designed as components in switchboards, panels and control consoles where positive and safe circuit protection is required and where space is at a premium.

The C383 fuse holders mount directly on standard TS35 DIN rails.

Features

- "Finger-Safe" design—Recessed termination screws and a fuse extraction door afford you IP20 grade protection and qualify as "finger-safe" per IEC standards
- Easy to adjust position on rail—Simply unlatch the DIN rail adapter, slide the holder to desired position and relock
- Quick change of fuse—A permanently attached pivoting fuse door simplifies and speeds fuse extraction. No tools or accessories needed
- Class CC model is UL listed and CSA certified for branch circuit protection. Midget models are UL Recognized and CSA certified for supplementary and high-speed protection
- Runs cool—The vented design provides adequate air flow around the holders at all times
- Self-extinguishing UL 94-VO rated polyester material

Standards and Certifications

Rated voltage:

- CSA/UL: 600 Vac/Vdc, 30A
- IEC (midget only): 690 Vac, 32A

Product Selection

C383FH_

Disconnect Fuse Holders

Description	Standard Pack	Catalog Number
For Class CC Fuse		
Single-pole fuse holder	12	**C383FHCC**
For Midget Fuse (1-1/2 in x 13/32 in)		
Single-pole fuse holder	12	**C383FHMD**

Accessories

Disconnect Fuse Holders

Description	Standard Pack	Catalog Number
Midget or Class CC Fuse Holder		
Multi-pole connection links	100	**C383MPCL**
Multi-pole handle pins	100	**C383MPHP**

8

Accessory Details

C383MPCL

Multi-pole connection links can be used to connect fuse holders together for multi-pole applications. Use two per connection.

C383MPHP

Handle pins can be used to connect handles in multi-pole applications.

Technical Data and Specifications

Disconnect Fuse Holders ①

Description	Specification
Housing	Polyester UL 94-V0 rated
Color	White
Wire size	8–18 AWG ②
Torque	22 lb-in (2.5 Nm)
Fuse size	0.41 x 1.5 in

Dimensions

Approximate Dimensions in Inches (mm)

CH163 Series Cover

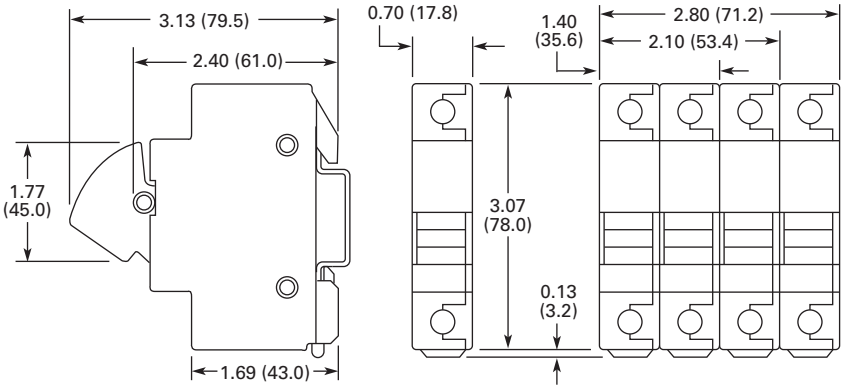

Notes

① For additional technical information, consult the Eaton web site or Customer Support Center.

② UL recognizes both solid and stranded wire. Ferrules are not required. CSA requires ferrules on stranded wire to achieve approval.

C350 Series Fuse Blocks and W Series Fuse Holders

Contents

Description	*Page*
C383 Series Disconnect Fuse Holders	**V7-T8-127**
C350 Series Fuse Blocks and W Series Fuse Holders	
Product Selection	**V7-T8-130**
Accessories	**V7-T8-131**
Technical Data and Specifications	**V7-T8-131**
Dimensions	**V7-T8-131**

C350 Series Fuse Blocks and W Series Fuse Holders

Product Description

Fuse Blocks

These space-saving Type C350 Fuse Blocks are UL approved for motor loads and are rated 600V, 30A.

Fuse Holders

- Class H, M and R

Features

Fuse Blocks

- Mount to 35 mm flat and 32 mm asymmetrical DIN rails
- 600V, 30A rated captive pressure plate terminals with copper alloy fuse clips
- Interlocking fuse blocks permit single, double or three-pole application—reduce inventory
- Class CC fuses have an interrupting rating of 200,000A
- Rejection feature prevents insertion of fuses with lower interrupting or voltage ratings

Fuse Holders

- Break-resistant: molded of heat-stabilized nylon
- Fuse clips: spring-reinforced for cool operation
- Fuse clip terminations: one-piece construction
- Universal mounting dimensions, for easy assembly and retrofit
- Breathing action collar: maintenance-free
- Pressure wire connectors: vibration resistant

Standards and Certifications

Contact Eaton for the latest UL 508A short circuit ratings on terminal blocks.

Fuse Blocks

- UL listed
- CSA certified

Fuse Holders

- UL tested for OEM subfeed applications

Fuse Blocks and Adapters

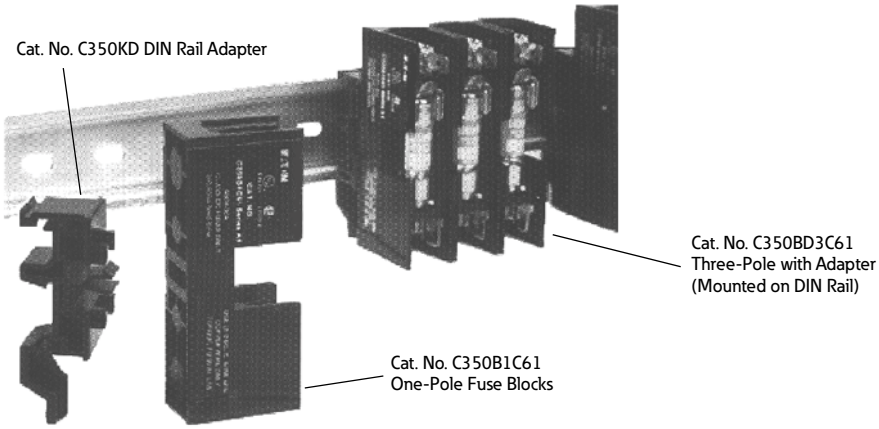

Product Selection

Class CC Fuse Blocks

Type	Catalog Number
Three-pole ①	**C350BD3C61**
Single-pole	**C350B1C61**
DIN adapter	**C350KD**

Class R, Three-Pole Fuse Holder

Fuse Holders—250V

Wire Termination		Number of Poles	Carton Qty.	30A Catalog Number	Carton Qty.	60A Catalog Number
Class H Fuse Holders						
Single collar (box lug)—sized to ampere rating		1	10	**W231HA**	10	**W261HA**
		2	5	**W232HA**	5	**W262HA**
		3	5	**W233HA**	5	**W263HA**
Class R Fuse Holders						
Single collar (box lug)—sized to ampere rating		1	10	**WR231HA**	—	—
		2	—	—	—	—
		3	5	**WR233HA**	1	**WR263HA**

Fuse Holders—600V

Wire Termination		Number of Poles	Carton Qty.	30A Catalog Number	Carton Qty.	60A Catalog Number
Class H Fuse Holders						
Single collar (box lug)—sized to ampere rating		1	10	**W631HA**	1	**W661HA**
		2	5	**W632HA**	1	**W662HA**
		3	1	**W633HA**	2	**W663HA**
Class M Fuse Holders						
Combination of double quick-connect, 20A max., and binding head screw, #10 max., Cu/Al		1	10	**WM631F**	—	—
		2	8	**WM632F**	—	—
		3	6	**WM633F**	—	—
Combination of double quick-connect, 20A max., and pressure plate screw, #10 max., Cu only		1	10	**WM631G**	—	—
		2	8	**WM632G**	—	—
		3	6	**WM633G**	—	—
Class R Fuse Holders						
Single collar (box lug)—sized to ampere rating		1	10	**WR631HA**	—	—
		2	5	**WR632HA**	—	—
		3	5	**WR633HA**	5	**WR663HA**
Combination of double quick-connect, 20A max., and binding head screw, #10 max., Cu/Al		1	—	—	—	—
		2	1	**WMR632F**	—	—
		3	6	**WMR633F**	—	—
Combination of double quick-connect, 20A max., and pressure plate screw, #10 max., Cu only		1	10	**WMR631G**	—	—
		3	6	**WMR633G**	—	—
Class R Fuse Holder, Type WRR Control Transformer Fuse Blocks						
Combination of double quick-connect, 20A max., and pressure plate screw, #14–#10 Cu only		3	6	**WRR633G**	—	—

Note

① Three-pole device is supplied with DIN rail adapter.

Accessories

Fuse Holder Accessories

Description	Catalog Number
Fuse puller	**TBP**
Lighted fuse puller (120 Vac)	**TBLP**

Technical Data and Specifications

Fuse Blocks

Description	Specification
Voltage rating	600V
Ampere rating	Pressure plate terminals rated for 30A
Dielectric strength	1200V maximum
Ambient temperature	221°F (105°C) maximum
Clip/terminals	Tin-plated copper alloy
Screw and captive pressure plate	Zinc-plated steel
Base	Thermoplastic UL 94VO flammability rating
DIN rail adapter	Thermoplastic UL 94VO flammability rating

Dimensions

Approximate Dimensions in Inches (mm)

Fuse Blocks

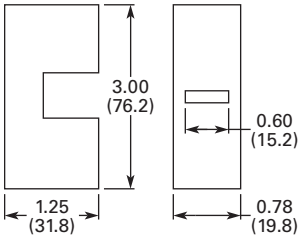

Catalog No. C350 Fuse Block

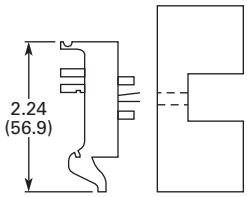

Catalog No. C350 Fuse Block with DIN Rail Adapter

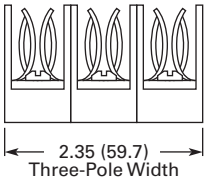

Three-Pole Width

Fuse Holders

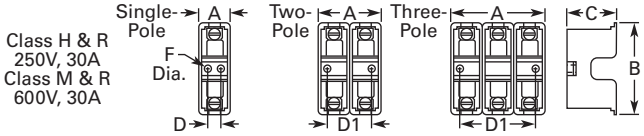

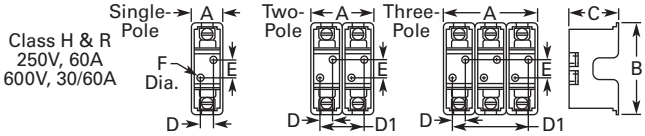

Class	Volts/ Amperes	Width A Single-Pole	Two-Pole	Three-Pole	Height B	Depth C	Mounting Holes D	Two-Pole D1	Three-Pole D1	E	Diameter F	Number of Mounting Holes Single-Pole	Two-Pole	Three-Pole
H, R	250V, 30A	1.00 (25.4)	2.00 (50.8)	3.00 (76.2)	3.13 (79.5)	1.56 (39.6)	0.38 (9.7)	1.25 (31.8)	2.50 (63.5)	—	0.22 (5.6)	2	2	2
	250V, 60A	1.44 (36.6)	2.88 (73.2)	4.31 (109.5)	4.75 (120.7)	2.06 (52.3)	0.50 (12.7)	1.81 (46.0)	3.13 (79.5)	1.25 (31.8)	0.22 (5.6)	2	4	4
	600V, 30/60A	1.69 (42.9)	3.38 (85.9)	5.06 (128.5)	6.94 (176.3)	2.63 (66.8)	0.63 (16.0)	2.19 (55.6)	3.75 (95.3)	3.13 (79.5)	0.28 (7.1)	2	4	4
M, R	600V, 30A	0.84 (21.3)	1.63 (41.4)	2.41 (61.2)	3.00 (76.2)	1.28 (32.5)	0.38 (9.7)	0.75 (19.1)	1.50 (38.1)	—	0.17 (4.3)	2	2	2

SmartWire-DT

XV Series HMI-PLC with SmartWire-DT

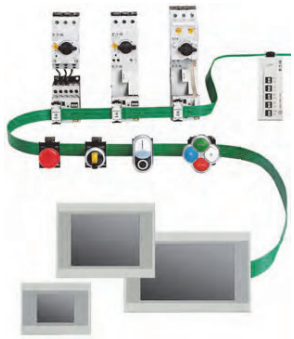

Machine Mount (IP67) I/O Modules

9.1 SmartWire-DT In Panel and On Machine Wiring Solution

System Overview
- System Components V7-T9-4
- System Overview Diagram V7-T9-6

Gateway Modules and System Controllers
- System Control Overview V7-T9-10
- Gateway Modules V7-T9-11
- XV-100/-300 Series HMI-PLC with SmartWire-DT V7-T9-12
- XC152 Series PLC with SmartWire-DT V7-T9-12
- easy802/806 Programmable Relays with SmartWire-DT V7-T9-13

I/O and Powerfeed Modules, System Connectivity Components
- Powerfeed Modules V7-T9-15
- I/O Modules V7-T9-15
- System Connectivity Components V7-T9-16

Motor Control Modules
- Product Identification V7-T9-19
- XTPE Electronic Manual Motor Protectors V7-T9-20
- XTCE Contactor Modules V7-T9-23
- EMS Electronic Motor Starters V7-T9-26
- DS7 Soft Start Controllers V7-T9-27
- DE1 Variable Speed Starters V7-T9-28
- DC1 Variable Frequency Drives V7-T9-30
- DA1 Variable Frequency Drives V7-T9-32

Pilot Device Modules
- M22 Contact and LED Modules V7-T9-34
- M22 Control Stations (8-Conductor) V7-T9-37

Stacklight Base Modules with SmartWire-DT
- SL4 and SL7 Stacklight Base Modules V7-T9-40

Machine Mount Components
- Machine Mount I/O Modules—Digital V7-T9-43
- Machine Mount I/O Modules—Analog V7-T9-45
- I/O Splitters V7-T9-46
- Other I/O Connections V7-T9-46
- Valve Connectors V7-T9-47
- Machine Mount Powerfeed Modules V7-T9-47
- Panel Transition Components V7-T9-48
- SmartWire-DT Round Bus Cables V7-T9-49
- Other System Components V7-T9-52
- Enclosed (IP67) Pilot Devices
  - Enclosed M22 Pilot Device Examples V7-T9-54
  - Enclosures V7-T9-54
  - M12 Wiring Receptacles V7-T9-54
- Remote Machine Mount Stacklights
  - Stacklight Mounting Modules—Fast Mounting System V7-T9-56
  - Stacklight Mounting Modules—Post Mounting System V7-T9-57

Technical Data and Specifications V7-T9-58

Dimensions V7-T9-102

SmartWire-DT In Panel and On Machine Wiring Solution

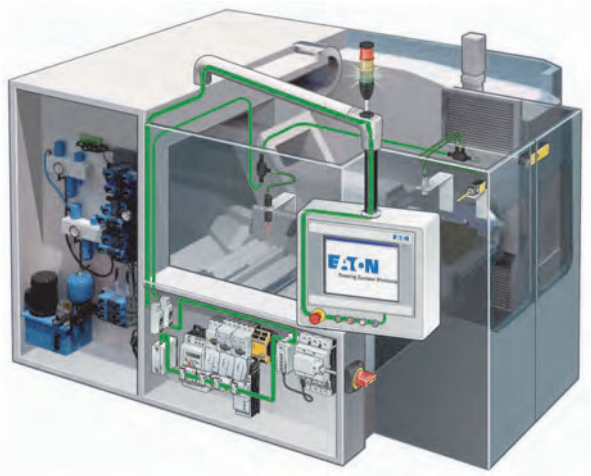

Contents

Description	*Page*
System Overview	
Features	**V7-T9-3**
Standards and Certifications	**V7-T9-3**
System Components	**V7-T9-4**
System Overview Diagram	**V7-T9-6**

System Overview

Product Description

The SmartWire-DT® In Panel and On Machine wiring system uses a single green cable inside a machine control cabinet and across the machine itself to connect motor starters, variable frequency drives, soft starters, pushbuttons, sensors, pneumatic and hydraulic valves, stacklights and other indicator lights.

Inside the machine control cabinet the continuous SmartWire-DT green cable is flat. The flat cable connects directly to in panel motor starters, variable frequency drives, soft starters, panel-mounted pushbutton actuators, stacklights and other indicator lights. It eliminates the need for most of the conventional point-to-point control wiring done in a traditionally wired control panel—and even integrates 24 Vdc control power for contactor coils on the single SmartWire-DT cable. The start of the SmartWire-DT system is either an Eaton PLC or a combination HMI/PLC with SmartWire-DT embedded or a simple gateway.

These SmartWire-DT gateways establish the connection between a SmartWire-DT system and standard programmable logic controller (PLC) fieldbuses, such as EtherNet/IP, Modbus TCP, EtherCAT, PROFINET, POWERLINK, PROFIBUS DP, SERCOS and CANopen. The gateway works without any conventional PLC I/O required because SmartWire-DT directly integrates the input/output (I/O) level in the switching devices.

Inside the control cabinet, typical faults such as loose connections and miswired terminations are eliminated using the flat cable and the specialized connectors. Outside the cabinet on the machine, the SmartWire-DT machine mount I/O modules connect using industry standard keyed M12 connectors to eliminate the possibility of miswiring. Further, dramatic wiring reductions are possible given the single SmartWire-DT cable connection that brings 24 Vdc power to and carries signals to and from devices.

Each SmartWire-DT machine mount I/O module has diagnostic LEDs built in, reducing commissioning time and troubleshooting in the field.

Nodes on the SmartWire-DT network both inside and outside the main control cabinet are automatically assigned addresses by the gateway or the HMI/PLC device with the simple push of a button—assigning addresses in the order that the nodes are connected. The system employs time monitoring and a watchdog timeout using the established target configuration as a reference—safely monitoring the integrity of the control scheme. SmartWire-DT has a maximum network length of 2000 feet and can connect up to 99 nodes per gateway. A software program called SWD-Assist enables the layout, planning and system configuration of a SmartWire-DT network.

Features

Connects directly to:

- XTPE electronic manual motor protectors
- XTCE contactors
- XTRE control relays
- Electronic motor starters
- DS7 soft start controllers
- DE1 variable speed starters
- DC1 VFDs
- DA1 VFDs
- M22 pilot devices
- SL4 and SL7 stacklights
- On Machine devices including sensors, limit switches, pneumatic and hydraulic valves, remote contactors, pushbuttons, stacklights and other command and control components

Gateways support fieldbus integration, including:

- EtherNet/IP
- Modbus TCP
- EtherCAT
- PROFINET
- POWERLINK
- PROFIBUS DP
- SERCOS
- CANopen
- Supports up to 99 nodes (58 nodes when connected to PROFIBUS DP Gateway)
- Automatically assigns node addresses
- Integrates and supplies 24 Vdc power to contactor coils
- Includes diagnostic bi-color LEDs on each node connection

Standards and Certifications

- UL listed
- UL tested to Canadian safety standards
- CE Certified
- RoHS compliant

System Components

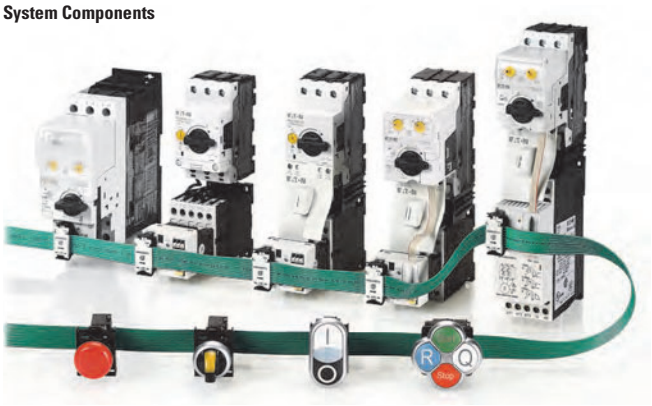

Contents

Description	*Page*
System Components	
System Overview	**V7-T9-2**
System Overview Diagram	**V7-T9-6**

System Components

Product Description

The start of the SmartWire-DT system is usually a gateway module connected to a PLC or controller fieldbus. This means that SmartWire-DT connected components will work with most third-party PLCs without having to create a new program. These devices are typically located within the main control cabinet for a machine.

To plan and lay out a SmartWire-DT network, an MS Windows-compatible software program called SWD-Assist is available as a free download from the Eaton website. The SWD-Assist configuration software allows a user to drag-and-drop system components like motor starters, drives, pushbuttons and indicator lights, and will calculate the control power requirements needed and generate a bill of materials of all the required SmartWire-DT components.

To download the SWD-Assist configuration software, visit www.eaton.com/smartwiredt.

In Panel Components

Gateway Modules

Gateway modules connect the SmartWire-DT system to the PLC. They are connected as nodes to the existing PLC fieldbus and are the start of the SmartWire-DT connection system. Gateways are available with EtherNet/IP, Modbus TCP, EtherCAT, PROFINET, POWERLINK, PROFIBUS DP, SERCOS III and CANopen protocols.

System Controllers

In the event that the Gateway module plus third-party PLC architecture is not used, system controllers from Eaton can operate a SmartWire-DT system. System controllers include an integrated SmartWire-DT gateway and are available as PLCs or HMI-PLCs using a CoDeSys programming platform or as programmable relays using simple ladder logic programming.

Motor Control Modules

Contactor modules fit into standard XT contactors and control relays directly on top, in place of a top-mounted auxiliary contact block. The modules fit all XTCE size B and C frame contactors and XTRE control relays.

Variable Speed Starters and Variable Frequency Drives connect to the SmartWire-DT system with plug-in modules similar to the approach with contactor modules.

Soft Start Controllers and Electronic Motor Starters with built-in SmartWire-DT functionality connect directly to the SmartWire-DT flat cable without the need for a supplemental module.

Pilot Device Modules

Pilot device modules fit into standard M22 pilot devices in both front-mount and base-mount configurations and replace the standard contact block and light units. Single and double contact modules with and without LEDs are available to meet a wide variety of control circuit requirements.

Stacklight Base Modules

Stacklight modules connect SL4 and SL7 Series stacklights when mounted to the control cabinet with Eaton's Fast Mount Base. A variety of incandescent, LED, high-power LED and audible signal modules are available to meet machine indication requirements.

In Panel Components

Digital and Analog I/O Modules

Digital and analog I/O modules are connected as nodes on the SmartWire-DT network and allow standard or generic devices to be connected to the SmartWire-DT system. They can be connected anywhere along the flat cable network and can therefore be positioned in the control panel to help reduce I/O wiring.

Powerfeed Modules

Powerfeed modules feed auxiliary 24 Vdc power and/or 15 Vdc network power into the SmartWire-DT flat cable. The auxiliary 24 Vdc power is needed for the power supply of contactors and the 15 Vdc network power is used for supplying power to additional SmartWire-DT nodes. Powerfeed modules are also used to create zone control or groups of devices controlled by a single Emergency Stop.

SmartWire-DT Flat Cable

The flat cable is an 8-conductor cable that is flexible, durable and rated for 600 V so that it can be placed in the panel wiring duct along with 480 V or 600 V power conductors. It has two prominent features: (a) arrows indicating the front of the cable and the direction away from the gateway and (b) black edging indicating the polarity of the flat cable, the 15 Vdc wire and the reference mark for installing the device plugs and flat plugs.

Other System Accessories

Other accessories for the SmartWire-DT system include connectors, jumpers, bushings, plugs and sockets, terminating resistors and crimping tools.

On Machine Components

At the edge of the control cabinet the SmartWire-DT system transitions from the 8-conductor flat cable to a 5-conductor round cable with standard DC M12 barrel connectors, using simple transition adapters that mount through the panel wall.

SmartWire-DT Round Cable

The round cable has 5 conductors, uses standard DC M12 barrel connectors, and is 300 V rated. It is used outside the control panel to connect SmartWire-DT machine mount I/O modules to the SmartWire-DT system for use with peripherals such as sensors, enclosed pushbuttons, pneumatic and hydraulic valves, stacklights and other remote devices. This single cable is used both to provide power to connected devices and to carry I/O signals.

Machine Mount I/O Modules

Machine mountable I/O modules are connected as nodes on the SmartWire-DT network and allow standard or generic devices to be connected to the SmartWire-DT system. They are suitable for washdown environments and can be connected anywhere around the machine with up to 2000 feet and 99 devices possible with a single cable connection.

Accessory Cables

A variety of accessory cables are available to make the connection between remote devices (including sensors, stacklights, hydraulic and pneumatic valves, enclosed pilot devices, and other command and control devices) and the SmartWire-DT machine mounted I/O modules.

Enclosed Pilot Device Stations

Pilot device modules mounted in IP67 enclosures for use in remote machine locations can be assembled from standard components supplied by Eaton, and contacts can be wired for direct connection to a SmartWire-DT machine mount I/O module using a standard device accessory cable as described in the section above. Examples of such devices include pilot lights, pushbuttons, illuminated pushbuttons, selector switches and key switches.

Remote Stacklights

Stacklights for use in remote machine locations can be assembled from standard components supplied by Eaton with contacts wired for direct connection to a SmartWire-DT machine mount I/O module using a standard device accessory cable.

Machine Mount Powerfeed Modules

Powerfeed modules feed 4 A of auxiliary 24 Vdc power into the SmartWire-DT round cable when needed to supply power to additional SmartWire-DT nodes. Eaton's SWD-Assist software can be used to quickly and easily calculate the need for Powerfeed modules in a round cable system.

High-Speed Operations

Normal SmartWire-DT system bus speeds of 125 Kbaud and 250 Kbaud are sufficient for most machine operations, but certain machine processes require higher speeds. In those cases, certain SmartWire-DT system controllers can operate the On Machine components in the SmartWire-DT system up to 2 Mbaud bus speeds. Consult later sections in this catalog for specific details.

System Overview Diagram

SmartWire-DT Contactor Modules

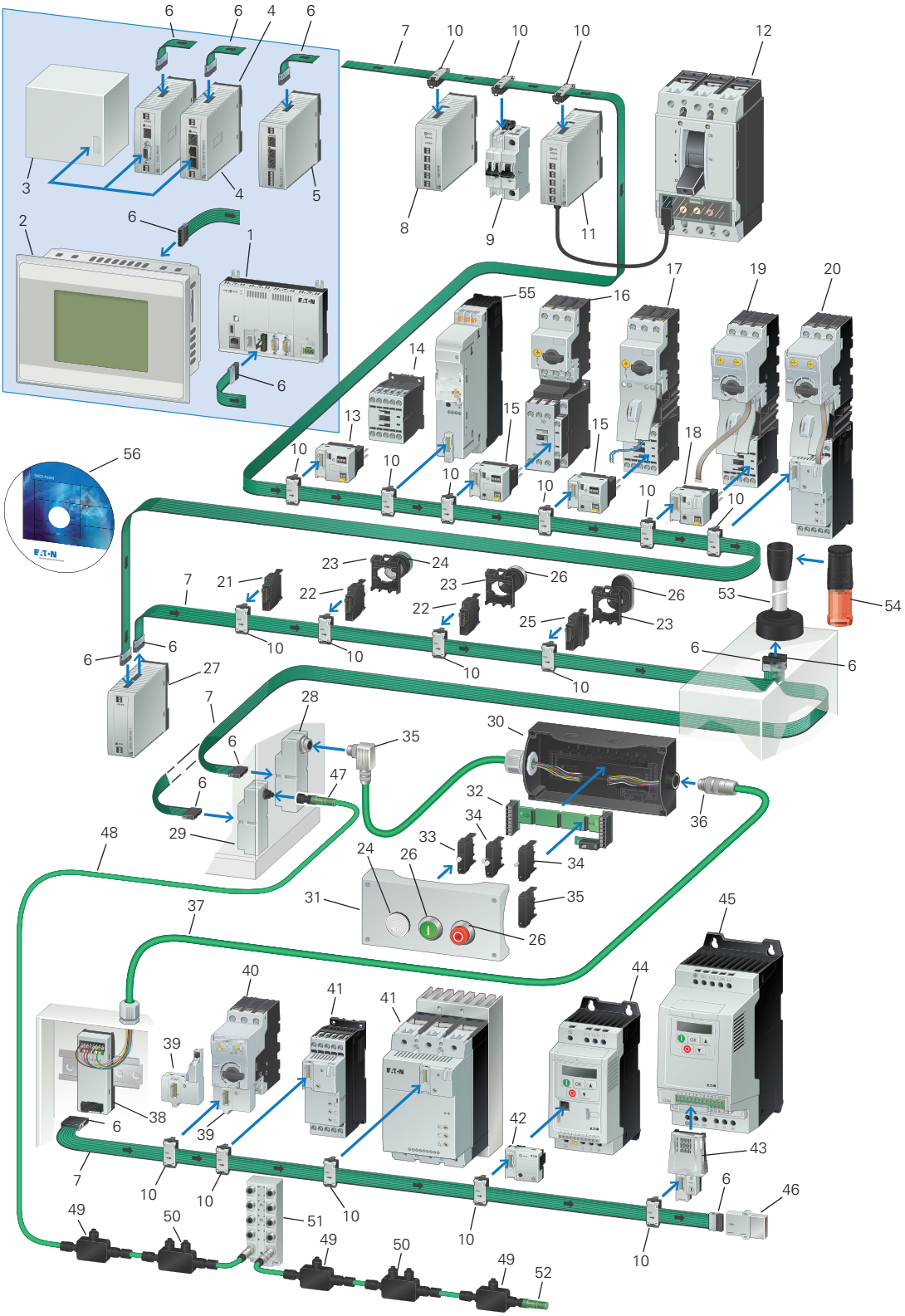

Item Number	Description
1	SmartWire-DT PLC XC-152
2	SmartWire-DT XV HMI-PLC
3	PLC with field bus interface
4	SmartWire-DT Gateways
5	Control relay easy800 with SmartWire-DT
6	SmartWire-DT blade terminal, 8-pole
7	SmartWire-DT 8-pin ribbon cable
8	SmartWire-DT I/O module
9	SmartWire-DT module for miniature circuit-breakers and residual-current circuit breakers
10	SmartWire-DT external device plug, 8-pole
11	SmartWire-DT connection for NZM
12	NZM circuit-breakers
13	SmartWire-DT contactor module
14	DILM contactor
15	SmartWire-DT contactor module with Hand-Off-Automatic switch
16	Motor protective circuit-breakers
17	Motor starter MSC
18	SmartWire-DT PKE module (motor starter)
19	Motor starter with PKE electronic motor protection
20	Soft starter DS7 with electronic motor protection from PKE
21	SmartWire-DT universal module, front mount
22	SmartWire-DT LED elements, front mount
23	RMQ-Titan mounting clamp for flush mounting plates
24	RMQ-Titan indicator light
25	SmartWire-DT function elements for front mount
26	SmartWire-DT operating elements
27	SmartWire-DT Powerfeed card
28	SmartWire-DT enclosure cable gland for converting a ribbon cable to an 8-pin round cable, M20

Item Number	Description
29	SmartWire-DT enclosure cable gland for converting a ribbon cable to a 5-pin round cable, M12
30	Surface mounting enclosure RMQ-Titan
31	Surface mounting enclosure RMQ-Titan
32	SmartWire-DT card for function elements, base fixing
33	SmartWire-DT LED elements for base fixing
34	SmartWire-DT function elements for base fixing
35	SmartWire-DT Universal slave for base fixing
36	SmartWire-DT 8-pin connector
37	SmartWire-DT round cable, 8-pole
38	SmartWire-DT adapter for flat/round cable for top-hat rail mounting
39	SmartWire-DT PKE (motor-protective circuit-breaker)
40	PKE motor-protective circuit-breakers
41	DS7 soft starter
42	SmartWire-DT function element for DC1 variable frequency drives
43	SmartWire-DT function element for DA1 variable frequency drives
44	DC1 variable frequency drives
45	DA1 variable frequency drives
46	SmartWire-DT bus termination resistor for 8-pin ribbon cable
47	5-pin M12 plug connector
48	Round cable, 5-pole
49	SmartWire-DT machine mount I/O module, 2 I/O
50	SmartWire-DT machine mount I/O module, 4 I/O
51	SmartWire-DT machine mount I/O module, max. 16 I/O
52	SmartWire-DT machine mount bus termination resistor for 5-pin round cable, M12
53	SmartWire-DT connection to SL4/SL7 signal tower
54	Signal towers SL4 /SL7
55	Electronic motor starter EMS
56	SmartWire-DT planning and ordering aid, SWD-Assist

Gateway Modules and System Controllers

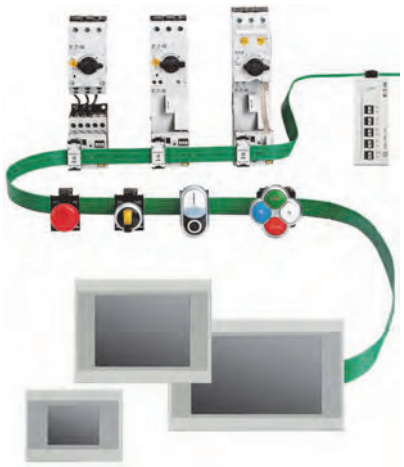

Contents

Description	*Page*
Gateway Modules and System Controllers	
System Control Overview	**V7-T9-10**
Gateway Modules	**V7-T9-11**
XV-100/-300 HMI/PLC	**V7-T9-12**
XC PLC	**V7-T9-12**
XV and XC Accessories	**V7-T9-12**
easy800 with SmartWire-DT	**V7-T9-13**

Gateway Modules and System Controllers

Gateway Modules

Product Description

SmartWire-DT Gateway modules allow easy connection to a wide variety of systems using standard fieldbus interfaces.

Gateways can be used to connect the SmartWire-DT communication system to PLCs and operating systems from any manufacturer using standardized fieldbus interfaces. SmartWire-DT can communicate via EtherNet/IP, Modbus TCP, EtherCAT, PROFINET, POWERLINK, PROFIBUS DP, SERCOS and CANopen with simple connection and configuration and with no changes required to the core PLC program in use.

Features

- Easy plug & play connection to the SmartWire-DT network
- Models available for all standard fieldbus protocols
- Simple interface to third-party PLCs
- Allow OEMs to easily transition between customer-specified PLCs without changing underlying in panel and on machine wiring
- High-speed operation of the SmartWire-DT On Machine system, up to 2 Mbaud, permitted using new EtherNet/IP Modbus TCP Gateway

System Controllers

XV-300 Series HMI-PLC with SmartWire-DT

Product Description

The XV-300 HMI-PLC is the most powerful combination of logic and visualization available today. The XV-300's logic software CoDeSys is based on the open IEC 61131 programming platform. Ideal for small, mid-range and full-scale PLC applications, the integrated SmartWire-DT master can control 99 nodes on a 2000-foot-long network.

Features

- Built-in SmartWire-DT master for 99 nodes
- Brilliant image display with 65,536 colors and 1024 x 600 pixel resolution in both 7-inch and 10.1-inch screen sizes
- High resolution, wide screen, multi-touch projected capacitive touchscreen (PCT)
- Single high-speed Ethernet standard with optional second high-speed independent Ethernet for multiple subnet connectivity, e.g., Machine network + Plant network, or Machine network + Wireless cellular modem
- Software bundles for XSoft-CoDeSys 3 PLC logic and visualization and/or Visual Designer HMI-SCADA graphical user interface
- Easy connection direct to motor control and other I/O both inside and outside the machine control cabinet using the SmartWire-DT machine wiring system

Standards and Certifications

- CE Mark
- UL
- cUL
- RoHS
- ATEX

XV-100 Series HMI-PLC with SmartWire-DT

Product Description

The XV HMI-PLC controller with SmartWire-DT master is a powerful combination of logic, visualization and motor control connectivity. It is ideal for small to mid-range PLC applications where integrated logic and visualization is advantageous and/or where remote administration is critical. The integrated SmartWire-DT master can control 99 nodes on a 2000-foot-long network.

Features

- Built-in SmartWire-DT master for 99 nodes
- Brilliant image display with 65,536 colors
- High resolution resistive touch TFT displays
- 3.5-inch, 5.7-inch or 7-inch wide screen displays in robust plastic housings and bezels, or 5.7-inch, 8.4-inch or 10.4-inch displays in high-end aluminum front bezels and metal housings
- Ethernet and RS-485 serial ports on all models
- PROFIBUS DP or CANopen master on all models larger than 3.5 inches
- Programmable with IEC 61131-3 compliant XSoft-CoDeSys software
- Easy connection direct to motor control and other I/O both inside and outside the machine control cabinet using the SmartWire-DT machine wiring system

Standards and Certifications

- cULus
- CE
- RoHS

XC152 Series PLC with SmartWire-DT

Product Description

The XC152 compact PLC combines plenty of processing power with a large number of communication interfaces. This makes the device particularly well-suited to standardized automation solutions in modular machine building applications.

The XC152 not only provides machine segment control functions that can be programmed with CoDeSys, but it can store module-specific visualizations. These visualizations can be retrieved and displayed on a central HMI or a computer as needed.

In addition, the XC152 connects a SmartWire-DT wiring network to standard fieldbus systems via built-in interfaces. This enables the XC152 PLC to support Eaton's Lean Automation strategy while enabling users to design automation systems in a flexible manner and run them cost-effectively.

Features

- CoDeSys PLC and Web visualization
- Galileo/CoDeSys remote visualization
- Ethernet port on all models
- Windows® CE 5 OS
- 32-bit 400 MHz RISC CPU
- 64 MB internal memory
- SD external memory slot
- Run/Stop switch
- Integrated SmartWire-DT master for 99 nodes
- Optional: RS-232, RS-485,PROFIBUS DP/MPI CANopen/easyNet

Standards and Certifications

- IEC/EN 61131-2, EN 50178
- EN 61000-6-2, EN 61000-6-4
- cULus
- CE
- RoHS

easy802/806 Programmable Relays with SmartWire-DT

Product Description

The new easy800 with integrated SmartWire-DT can control up to 99 SmartWire-DT devices with up to 166 inputs and outputs. These easy800 devices feature an integrated power feeder for regulating power to connected devices, and offer built-in LEDs for visual feedback on the state of the SmartWire-DT system.

To support programming, networking and communications, the easy800 has a range of built-in interfaces. Programming is accomplished using a simple USB cable, and connection of remote text displays, touch panels and to Ethernet is straightforward.

Within the easy800 family, a model is available that features four fast inputs (5 kHz) on the controller itself. Two of the four inputs can also be configured as fast outputs (5 kHz). In addition, this model supports the interconnection of multiple controllers to enable up to 1360 inputs/outputs on a single system.

Standards

- EN 50178
- IEC/EN 60947
- UL 508

Certifications

- cULus
- CE
- C-Tick
- RoHS

System Control Overview

Lean Solution Architecture #1
Gateway SmartWire-DT to any PLC

- Advantages of SmartWire-DT without changing your control architecture
- Optimize and standardize your control cabinet
- Simplify PLC transitions

Lean Solution Architecture #2
XV HMI-PLC with Integrated SmartWire-DT

- Fully optimize your machine design
- Powerful control and visualization capabilities
- Combine SmartWire-DT with broad fieldbus and enterprise networking capabilities

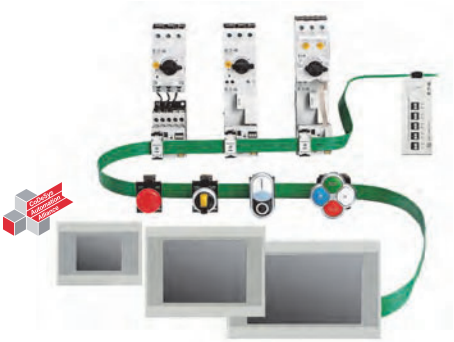

Lean Solution Architecture #3
XC152 SmartWire-DT PLC

- When local visualization is not required
- Powerful CoDeSys-based control
- Combine SmartWire-DT with broad fieldbus and enterprise networking capabilities
- Web visualization and remote access

Lean Solution Architecture #4
easy802/806 Programmable Relays with SmartWire-DT

- Bring the value of SmartWire-DT to small machines
- Simple configuration using easySoft-Pro ladder logic programming software with integrated SWD-Assist configuration utility

Product Selection

Gateway Modules

Gateway modules connect the SmartWire-DT system to the programmable logic controller (PLC). Gateways are nodes on the PLC fieldbus and are the start of the SmartWire system. All Gateways support 125/250 Kbaud SmartWire bus speeds for In Panel components. Gateways to support SmartWire On Machine module operation at higher bus speeds when demanded by machine requirements are shown below.

Ethernet Gateway

EtherNet/IP Modbus TCP Gateway

Description	Fieldbus Baud Rates	SmartWire-DT Baud Rates	Number of SmartWire-DT Nodes	Catalog Number
For connection to EtherNet/IP or Modbus TCP fieldbus Connection via two-port Ethernet switch (RJ45) Separate RS-232 diagnostics interface (RJ45)	10/100 MBit/s	Up to 2 Mbaud	Max. 99	**EU5C-SWD-EIP-MODTCP**

PROFINET Gateway

PROFINET Gateway

Description	Fieldbus Baud Rates	SmartWire-DT Baud Rates	Number of SmartWire-DT Nodes	Catalog Number
For connection to PROFINET fieldbus Connection via two-port Ethernet switch (RJ45) Separate USB diagnostics interface (Mini USB)	100 MBit/s	125/250 Kbaud	Max. 99	**EU5C-SWD-PROFINET**

POWERLINK Gateway

POWERLINK Gateway

Description	Fieldbus Baud Rates	SmartWire-DT Baud Rates	Number of SmartWire-DT Nodes	Catalog Number
For connection to POWERLINK fieldbus Connection via two-port Ethernet switch (RJ45) Separate USB diagnostics interface (Mini USB)	100 MBit/s	125/250 Kbaud	Max. 99	**EU5C-SWD-POWERLINK**

EtherCAT Gateway

EtherCAT Gateway

Description	Fieldbus Baud Rates	SmartWire-DT Baud Rates	Number of SmartWire-DT Nodes	Catalog Number
For connection to EtherCAT fieldbus Connection via two-port Ethernet switch (RJ45) Separate USB diagnostics interface (Mini USB)	100 MBit/s	125/250 Kbaud	Max. 99	**EU5C-SWD-ETHERCAT**

PROFIBUS DP Gateway

PROFIBUS DP Gateway

Description	Fieldbus Baud Rates	SmartWire-DT Baud Rates	Number of SmartWire-DT Nodes	Catalog Number
For connection to PROFIBUS DP fieldbuses Connection via 9-pin Sub-D socket Separate RS-232 diagnostics interface (RJ45)	Up to 12 MBit/s	125/250 Kbaud	Max. 58	**EU5C-SWD-DP**

CANopen Gateway

CANopen Gateway

Description	Fieldbus Baud Rates	SmartWire-DT Baud Rates	Number of SmartWire-DT Nodes	Catalog Number
For connection to CANopen fieldbus Connection via 9-pin Sub-D socket Separate RS-232 diagnostics interface (RJ45)	Up to 1 MBit/s **Should this be 12?**	125/250 Kbaud	Max. 99	**EU5C-SWD-CAN**

SERCOS Gateway

SERCOS Gateway

Description	Fieldbus Baud Rates	SmartWire-DT Baud Rates	Number of SmartWire-DT Nodes	Catalog Number
For connection to SERCOS III fieldbus Connection via two-port Ethernet switch (RJ45) Separate USB diagnostics interface (Mini USB)	100 MBit/s	125/250 Kbaud	Max. 99 (depends on SERCOS master capability)	**EU5C-SWD-SERCOS**

XV-100/-300 HMI/PLC

XV-300 HMI/PLC

XV-300 HMI/PLC with SmartWire-DT

Display Size/Type	Display Resolution	Programming Software	Visual Designer Run Time	Fieldbus Type	RS-485 (DB9)	Ethernet (RJ45)	Catalog Number
7.0 in PCT	1024x600	XSoft CoDeSys-3	No	CANopen	Yes	Single	**XV-303-70-BE0-A00-1C**
7.0 in PCT	1024x600	XSoft CoDeSys-3	No	CANopen	Yes	Dual	**XV-303-70-CE0-A00-1C**
7.0 in PCT	1024x600	XSoft CoDeSys-3	Yes	CANopen	Yes	Single	**XV-303-70-BE0-A00-1E**
10.0 in PCT	1024x600	XSoft CoDeSys-3	No	CANopen	Yes	Dual	**XV-303-10-CE0-A00-1C**
10.0 in PCT	1024x600	XSoft CoDeSys-3	No	CANopen	Yes	Single	**XV-303-10-BE0-A00-1C**
10.0 in PCT	1024x600	XSoft CoDeSys-3	Yes	CANopen	Yes	Dual	**XV-303-10-CE0-A00-1E**

XV-100 HMI/PLC

XV-100 HMI/PLC with SmartWire-DT

Display Size/Type	Display Resolution	Programming Software	Fieldbus Type	RS-485 (DB9)	Ethernet (RJ45)	Catalog Number
Plastic Housing						
3.5 in TFT	QVGA 320x240	XSoft CoDeSys-2 or -3	None	None	Yes	**XV-102-BE-35TQRC-10**
5.7 in TFT	VGA 640x480	XSoft CoDeSys-2 or -3	CANopen	Yes	Yes	**XV-102-E6-57TVRC-10**
		XSoft CoDeSys-2 or -3	PROFIBUS DP	Yes	Yes	**XV-102-E8-57TVRC-10**
7.0 in TFT	WGA 800x480	XSoft CoDeSys-2 or -3	CANopen	Yes	Yes	**XV-102-E6-70TWRC-10**
		XSoft CoDeSys-2 or -3	PROFIBUS DP	Yes	Yes	**XV-102-E8-70TWRC-10**
Metal Housing						
5.7 in TFT	VGA 640x480	XSoft CoDeSys-2 or -3	CANopen	Yes	Yes	**XV-152-E6-57TVRC-10**
		XSoft CoDeSys-2 or -3	PROFIBUS DP	Yes	Yes	**XV-152-E8-57TVRC-10**
8.4 in TFT	VGA 640x480	XSoft CoDeSys-2 or -3	CANopen	Yes	Yes	**XV-152-E6-84TVRC-10**
		XSoft CoDeSys-2 or -3	PROFIBUS DP	Yes	Yes	**XV-152-E8-84TVRC-10**
10.4 in TFT	VGA 640x480	XSoft CoDeSys-2 or -3	CANopen	Yes	Yes	**XV-152-E6-10TVRC-10**
		XSoft CoDeSys-2 or -3	PROFIBUS DP	Yes	Yes	**XV-152-E8-10TVRC-10**

XC PLC

XC152 PLC SmartWire-DT

XC152 PLC SmartWire-DT

Programming Software	Fieldbus Type	RS-232 (DB9)	RS-485 (DB9)	Ethernet (RJ45)	Catalog Number
XSoft CoDeSys-2 or -3	None	Yes	None	Yes	**XC-152-E3-11**
XSoft CoDeSys-2 or -3	CANopen	None	Yes	Yes	**XC-152-E6-11**
XSoft CoDeSys-2 or -3	PROFIBUS DP	None	Yes	Yes	**XC-152-E8-11**

XV and XC Accessories

XV HMI/PLC and XC PLC Accessories

Description	Catalog Number
PLC programming software, single seat license	**SW-XSOFT-CODESYS-3-S**
PLC programming software, multiple seat license	**SW-XSOFT-CODESYS-3-M**
SD memory card	**MEMORY-SD-A1-S**

easy800 with SmartWire-DT

easy800 with SmartWire-DT

	Description	Programming Software	Fieldbus Type	RS-232 (RJ45)	Inputs 24 Vac 5 kHz	Outputs 24 Vdc ①	SmartWire-DT Baud Rates	Catalog Number
EASY802-DC-SWD	Control relay with SmartWire-DT	EASY-SOFT-PRO	None	Yes	None	None	Up to 2 Mbaud	**EASY802-DC-SWD**
EASY806-DC-SWD	Control relay with SmartWire-DT, four inputs, two of which can be used as outputs (transistor 24 Vdc, 0.1 A), easyNet onboard	EASY-SOFT-PRO	easyNet	Yes	4	2 ①	Up to 2 Mbaud	**EASY806-DC-SWD**

Remote Displays

Both the EASY802 and EASY806 controllers can be connected to a MFD remote display or a XV touch panel display with Galileo.

EASY-SWD Accessories

Accessories—easy800

	Description	Catalog Number
MFD-80	MFD display, NEMA 4X indoor rated	**MFD-80**
MFD-CP4	24 Vdc power / communication module	**MFD-CP4**
	easy802/806 to MFD-CP4 communication cable, 1.5 m	**EU4A-RJ45-CAB2**
	easy802/806 to XV HMI communication cable, 2 m	**EU4A-RJ45-CAB1**
	Programming software with SWD-Assist configuration software integrated	**EASY-SOFT-PRO**

Note

① Use of outputs will result in a decrease in an equal number of available inputs.

I/O and Powerfeed Modules, System Connectivity Components

Contents

Description	*Page*
I/O and Powerfeed Modules, System Connectivity Components	
Powerfeed Modules	**V7-T9-15**
I/O Modules	**V7-T9-15**
System Connectivity Components	**V7-T9-16**

I/O and Powerfeed Modules, System Connectivity Components

Product Description

I/O and Powerfeed modules mount easily to DIN rail inside the control cabinet and connect directly to the SmartWire-DT system with snap-in connections to the 8-conductor flat SmartWire-DT cable.

I/O modules provide a means of easy connection of digital and analog devices to the SmartWire-DT network. Powerfeed modules allow the insertion of 24 Vdc and/or 15 Vdc power where necessary based on the power demands of components connected to the SmartWire-DT network.

Connectivity components are designed to make connection of devices to the 8-conductor flat SmartWire-DT cable simple and trouble-free.

Features

- I/O modules available in digital input and output, analog input and output, and RTD input versions in various combinations to simplify panel configuration
- Relay output version available for high-current loads
- Temperature input versions have wide operating ranges to support a variety of application requirements
- Powerfeed modules can be used to create zoned control arrangements to support integration of Emergency Stop devices into a network

Product Selection

Powerfeed Modules

Powerfeed Module

Powerfeed Modules

Powerfeed modules feed and regulate auxiliary 24 Vdc power and/or 15 Vdc network power into the SmartWire-DT flat cable. The auxiliary 24 Vdc power is needed for the power supply of contactors and the 15 Vdc network power is used for supplying power to additional SmartWire-DT nodes. Powerfeed modules are also used to create zone control or groups of devices controlled by a single Emergency Stop.

Description	Pkg. Qty.	Catalog Number
Powerfeed module 1 (for 24 Vdc auxiliary power)	1	**EU5C-SWD-PF1-1**
Powerfeed module 2 (for 24 Vdc auxiliary power and 15 Vdc network power)	1	**EU5C-SWD-PF2-1**

I/O Modules

Digital I/O Module

Digital I/O Modules

Digital input/output (I/O) modules are connected as nodes on the SmartWire-DT network and allow standard or generic devices to be connected to the SmartWire-DT system. They can be connected anywhere along the flat cable network and can therefore be positioned in the control panel to help reduce the I/O wiring.

Description	Pkg. Qty.	Catalog Number
Digital module with 8 digital inputs 24 Vdc	1	**EU5E-SWD-8DX**
Digital module with 8 digital outputs 24 Vdc / 0.5 A	1	**EU5E-SWD-X8D**
Digital module with 4 digital inputs 24 Vdc and 4 transistor outputs 24 Vdc/0.5 A	1	**EU5E-SWD-4D4D**
Digital module with 4 digital inputs 24 Vdc and 2 relay outputs 250 Vac/3 A	1	**EU5E-SWD-4D2R**
Digital module with 4 digital inputs 24 Vdc three-wire connections for sensor inputs	1	**EU5E-SWD-4DX**

Analog I/O Module

Analog I/O Modules

Analog input/output (I/O) modules are connected as nodes on the SmartWire-DT network and allow standard or generic devices to be connected to the SmartWire-DT system. They can be connected anywhere along the flat cable network and can therefore be positioned in the control panel to help reduce the I/O wiring.

Description	Pkg. Qty.	Catalog Number
Analog module with 4 analog inputs 0–10 V or 0–20 mA	1	**EU5E-SWD-4AX**
Analog module with 2 analog inputs 0–10 V or 0–20 mA and 2 analog outputs 0–10 V or 0–20 mA	1	**EU5E-SWD-2A2A**

Temperature Input Module

Temperature Input Modules

Temperature input modules are connected as nodes on the SmartWire-DT network and allow standard or generic devices to be connected to the SmartWire-DT system. They can be connected anywhere along the flat cable network and can therefore be positioned in the control panel to help reduce the I/O wiring.

Description	Pkg. Qty.	Catalog Number
RTD module with 4 temperature inputs Pt100, Pt 1000 or Ni1000; –58 to +392 °F (–50 to +200 °C)	1	**EU5E-SWD-4PT**
RTD module with 4 temperature inputs Pt100, Pt 1000 or Ni1000; –148 to +752 °F (–100 to +400 °C) ①	1	**EU5E-SWD-4PT-2**

Note

① EU5E-SWD-4PT-2 with hardware version V3 (HWV03) have a lower temperature range of –100 °C (–148 °F); earlier versions have a lower temperature range of only –50 °C (–58 °F).

System Connectivity Components

In Panel Components

System connectivity components for the SmartWire-DT system includes cables, connectors, jumpers, bushings, plugs, sockets, flat to round cable adapters, and crimping tools.

In Panel Components

	Description	Length	Pkg. Qty.	Catalog Number
Flat Cable	**Flat Cable, 8 AWG 24, 600 V**			
	For SmartWire-DT network **inside** the control panel	328.1 ft (100 m)	1	**SWD4-100LF8-24**
	Complete with flat plugs SWD4-8MF2 installed at both ends	19.5 in (0.5 m)	1	**SWD4-M5LF8-24-2S**
		9.8 ft (3 m)	1	**SWD4-3LF8-24-2S**
		16.4 ft (5 m)	1	**SWD4-5LF8-24-2S**
		32.8 ft (10 m)	1	**SWD4-10LF8-24-2S**
Device Plug	**Device Plug**			
	For connection to SmartWire-DT modules or nodes. Position as required based on node layout and crimp with tool SWD4-CRP-1	—	10	**SWD4-8SF2-5**
Flat Plug	**Flat Plug**			
	For connection to SmartWire-DT system components: gateways, Powerfeed modules, coupling and terminating resistor. To make a custom length flat cable, simply cut flat cabling to required length and install these end connectors with tool SWD4-CRP-2	—	10	**SWD4-8MF2**
Device Plug Jumper	**Device Plug Jumper**			
	For bridging open, spare or inverted device plugs	—	5	**SWD4-SEL8-10**
Universal Modules	**Universal (Placeholder) Module**			
	Front mount. For use to hold a network address location for a node that may be installed at some time in the future	—	20	**M22-SWD-NOP**
	Back mount. For use in enclosures with back mounting features	—	20	**M22-SWD-NOPC**
Coupling	**Coupling**			
	For connecting or joining flat cables with flat plugs	—	1	**SWD4-8SFF2-5**
Terminating Resistor	**Terminating Resistor**			
	For terminating the end of the network on a flat cable	—	1	**SWD4-RC8-10**
Device Plug Tool	**Crimping Tools**			
	Device plug crimping tool (for SWD4-8SF2-5)	—	1	**SWD4-CRP-1**
Flat Plug Tool	Flat plug crimping tool (for SWD4-8MF2)	—	1	**SWD4-CRP-2**

Outside-the-Panel Components

The 8-conductor SmartWire-DT flat cable can be extended outside the cabinet to another cabinet or to pushbutton control stations using cable adapters and 8-conductor round cables.

Note: These cables and components are not compatible with On Machine I/O system as described starting on **Page V7-T9-42**.

Outside-the-Panel Components

	Description	Length	Pkg. Qty.	Catalog Number
Round Cable	**Round Cable, 4 AWG 20 and 4 AWG 24, 300 V**			
	For SmartWire-DT network **outside** the control panel (8-wire version)	164.0 ft (50 m)	1	**SWD4-50LR8-24**
	Connectors for Round 8-Pole Cables			
Connector Socket	Round cable 8-pole plug for cabinet-to-cabinet connection	—	1	**SWD4-SF8-67**
Connector Plug	Round cable 8-pole plug for cabinet-to-cabinet connection	—	1	**SWD4-SM8-67**
Connector (Right Angle—Socket)	Right angle round cable 8-pole socket	—	1	**SWD4-SF8-67W**
Connector (Right Angle—Socket)	Right angle round cable 8-pole plug	—	1	**SWD4-SM8-67W**
	Panel Cable Adapter			
Adapter	For flat cable (plug) to round cable terminals	—	1	**SWD4-8FRF-10**
	Cabinet Cable Adapter Socket			
Adapter Socket	For flat cable (plug) to round cable (plug)	—	1	**SWD4-SFL8-20**
	Cabinet Cable Adapter Plug			
Adapter Plug	For flat cable (plug) to round cable (socket)	—	1	**SWD4-SML8-20**

Motor Control Modules

Contents

Description	*Page*
Motor Control Modules	
Product Identification	**V7-T9-19**
XTPE Electronic Manual Motor Protectors	**V7-T9-20**
XTCE Contactor Modules	**V7-T9-23**
EMS Electronic Motor Starters	**V7-T9-26**
DS7 Soft Start Controllers	**V7-T9-27**
DE1 Variable Speed Starters	**V7-T9-28**
DC1 Variable Frequency Drives	**V7-T9-30**
DA1 Variable Frequency Drives	**V7-T9-32**

Motor Control Modules

Product Description

Contactor modules fit onto standard XT contactors and control relays directly on top, in place of a top mounted auxiliary contact block. The modules fit all XTCE size B and C frame contactors and XTRE control relays.

Soft Start Controllers, Variable Speed Starters and Variable Frequency Drives connect to the SmartWire-DT system with plug-in modules similar to the approach with Contactor Modules.

Electronic Motor Starters with built-in SmartWire-DT functionality connect directly to the SmartWire-DT flat cable without the need for a supplemental module.

These modules facilitate direct connection to the SmartWire-DT flat cable and eliminate the traditional point-to-point wiring to the PLC input and output modules as well as wiring to the contactor coils.

Features

- Integrated 24 Vdc coil power on network and plug-in modules
- Integrated switch position polling and mechanical switch position display on contactor modules
- Integrated feedback circuit to PLC
- Built-in diagnostic bi-color LEDs on each module
- Connection to SmartWire-DT flat cable via quick disconnect device plugs

Product Identification

SmartWire-DT Contactor Modules

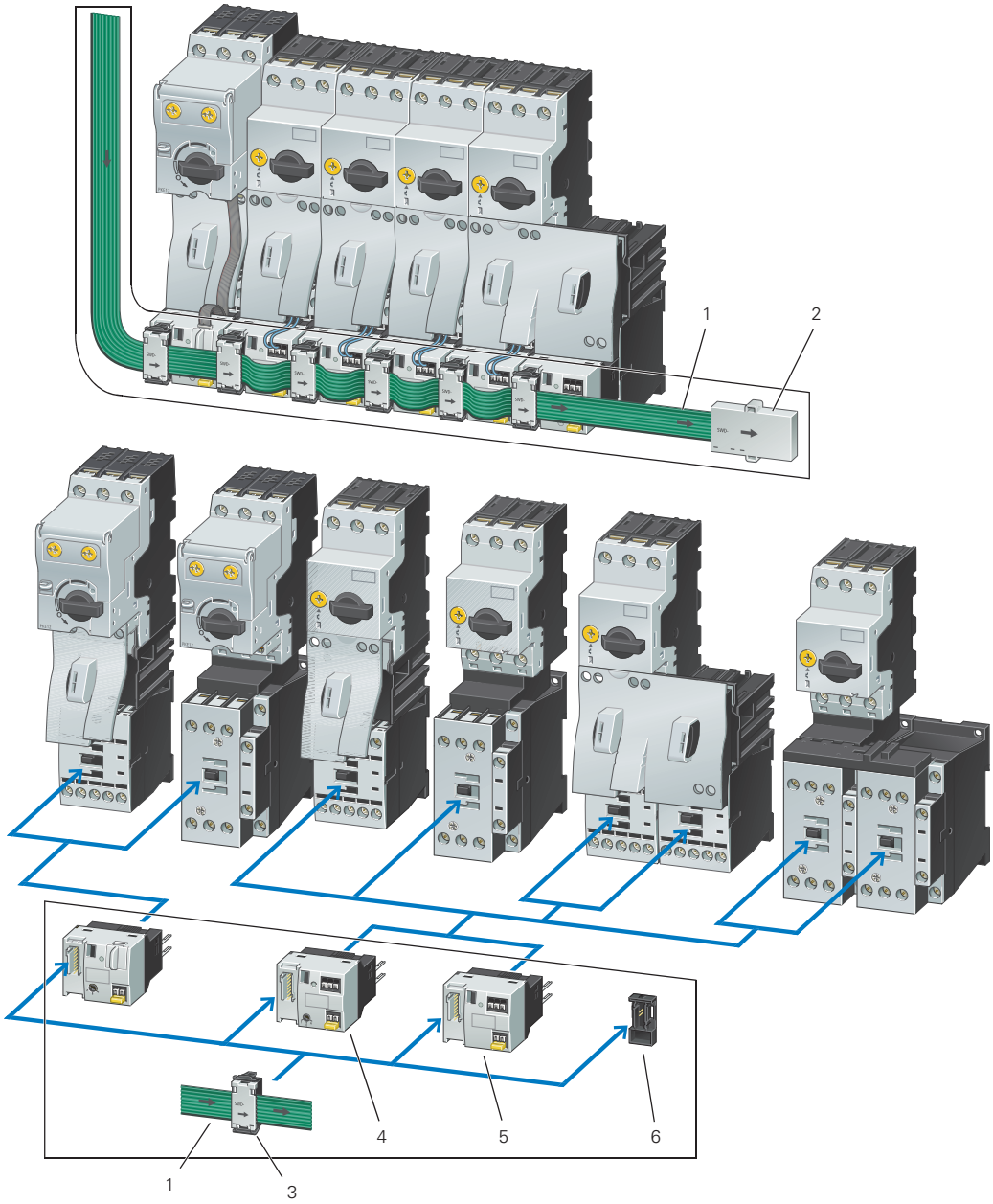

Item Number	Description
1	Flat cable
2	Terminating resistor (SWD4-RC8-10)
3	Device plug (SWD4-85F2-5)
4	Modules for XT contactors with XTPR manual motor protectors, with 1-0-A switch (DIL-SWD-32-002)
5	Modules for XT contactors with XTPR manual motor protectors (DIL-SWD-32-001)
6	Device plug jumper (SWD4-SEL8-10)

***XT* Electronic Manual Motor Protector**

Contents

Description	*Page*
Motor Control Modules	
Product Identification	**V7-T9-19**
XTPE Electronic Manual Motor Protectors	
Product Selection	**V7-T9-21**
XTCE Contactor Modules	**V7-T9-23**
EMS Electronic Motor Starters	**V7-T9-26**
DS7 Soft Start Controllers	**V7-T9-27**
DE1 Variable Speed Starters	**V7-T9-28**
DC1 Variable Frequency Drives	**V7-T9-30**
DA1 Variable Frequency Drives	**V7-T9-32**

XTPE Electronic Manual Motor Protectors

Product Description

The ***XT*** Electronic Manual Motor Protector provides the same functionality as the ***XT*** thermal manual motor protector, but with an added level of flexibility and selectability. The XTPE incorporates electronic control technology to enable more options and larger dial setting ranges. The trip units are interchangeable, allowing users to exchange as needed using the same base. The reduced number of part numbers decreases bill of material complexity while reducing inventory demands. The XTPE electronic manual motor protector includes the following features:

- 4:1 max to min overcurrent dial setting range
- Selectable trip class (5, 10, 15, 20)
- Interchangeable trip units
- Three base units (12, 32 and 65A)
- Common accessories with the XTPR

Features and Benefits

Advanced Trip Unit

In addition to the selectability, the XTPE is also available with an advanced trip unit that can communicate system data and protector data thru SmartWire-DT. SmartWire-DT is an innovative cost effective connection technology that enables quick installation of control wiring to the starter through a single green cable. When on SmartWire-DT, the XTPE can communicate the following:

- Current Values
  - Maximum phase current
  - Overload warning
- Diagnostics Data
  - Overload fault
  - Cause of trip (overcurrent or short circuit)
  - Phase loss
  - Trip via TEST
- Status Messages
  - Control unit type
  - Overload setting
  - Time-lag
  - Switching status

XTPE Electronic MMP

The XTPE Electronic MMP provides the selectability, control, and insight options that give panel builders and OEMs the solutions necessary to enhance motor control designs while reducing total costs.

Standards and Certifications

- CE approved
- UL Listed File No. E36332
- UL 508 group motor and Type E
- IEC/EN 60947
- CSA File 012528, Class 3211-05

Product Selection

XT Electronic Manual Motor Protector

MMP Advanced Trip Units Used with SmartWire-DT

B Frame

Overload Release Setting Amp Range	For Use with Base Catalog Number	UL/CSA Maximum Three-Phase hp Ratings 200 V	240 V	480 V	600 V	IEC Maximum Motor kW Ratings 220 V 230 V 240 V	380 V 400 V 415 V	440 V	500 V	600 V 690 V	Trip Unit Type Number	Catalog Number
B Frame												
0.3–1.2	XTPE012B	①	①	0.5	0.5	0.18	0.37	0.37	0.37	0.75	PKE-XTUA-1,2	**XTPEXTA1P2B**
1–4	XTPE012B	0.75	0.75	2	3	0.75	1.5	1.5	2.2	3	PKE-XTUA-4	**XTPEXTA004B**
3–12	XTPE012B	3	3	7.5	10	3	5.5	5.5	5.5	7.5	PKE-XTUA-12	**XTPEXTA012B**
8–32	XTPE032B	5	7.5	15	20	7.5	15	15	18.5	30	PKE-XTUA-32	**XTPEXTA032B**
D Frame												
8–32	XTPE065D	7.5	7.5	20	25	7.5	15	15	18.5	30	PKE-XTUWA-32	**XTPEXTA032D**
16–65	XTPE065D	15	15	40	40	18.5	30	37	45	55	PKE-XTUA-65	**XTPEXTA065D**

D Frame

B Frame

MMP Used with SmartWire-DT—Complete Assembly

Overload Release Setting Amp Range	UL/CSA Maximum Motor hp Ratings 200 V	230 V	460 V	575 V	IEC Maximum Motor kW Ratings 220 V 230 V 240 V	380 V 400 V 415 V	440 V	500 V	600 V 690 V	Complete Manual Motor Protector Type Number	Catalog Number
0.3–1.2	①	①	0.5	0.5	0.18	0.37	0.37	0.37	0.75	PKE12/XTUA-1,2	**XTPE1P2BCA**
1–4	0.75	0.75	2	3	0.75	1.5	1.5	2.2	3	PKE12/XTUA-4	**XTPE004BCA**
3–12	3	3	7.5	10	3	5.5	5.5	5.5	7.5	PKE12/XTUA-12	**XTPE012BCA**
8–32	5	7.5	15	20	7.5	15	15	18.5	30	PKE32/XTUA-32	**XTPE032BCA**

UL 508 Type E XT Electronic Combination Motor Controllers—Complete Assembly Including Trip Unit

B Frame

B Frame Electronic MMP with C Frame Contactor

Overload Release Setting Amp Range	UL/CSA Maximum Three-Phase hp Ratings 200 V	240 V	380 Y/ 415 V	480 Y/ 277 V	600 Y/ 347 V	Maximum Single-Phase hp Ratings 115 V	200 V	240 V	Catalog Number With SmartWire-DT
0.3–1.2	①	①	①	①	0.5	①	①	①	**XTFCE1P2BCCATD** ②
1–4	0.75	0.75	1.5	2	—	0.125	0.25	0.33	**XTFCE004BCCATD** ③
3–12	3	3	5	7.5	—	0.5	1	1.5	**XTFCE012BCCATD** ③
8–32	5	5	10	15	—	1.5	3	3	**XTFCE032BCCATD** ③

Notes

① In this range, calculate motor rating according to rated current. Specified values to NEC 430.6 (A) (1).
② SCCR: 14 kA, 600 Vac
③ SCCR: 18 kA, 480 Vac

PKE-SWD-SP

SmartWire-DT PKE MMP Module

SmartWire-DT module for connecting XTPE manual motor protector (MMP) advanced trip units.

Description	For Use With …	Pkg. Qty.	Catalog Number
Enables monitoring of XTPE switch position/status			
Commands: – Remote tripping of MMP – Motor current in % – Thermal motor image in % – Set value of trip unit class/setting – Cause of trip (overload vs. short-circuit)	XTPEXTA	1	**PKE-SWD-SP**

PKE32-COM

SmartWire-DT PKE MMP Cable

Communication cable for connecting PKE contactor modules and DS7 soft start controllers to XTPE manual motor protector (MMP).

Description	For Use With …	Pkg. Qty.	Catalog Number
Order as needed to connect DS7-34D soft start controllers to XTPE MMPs (up to 32 A)	DS7-34D_		
This cable is included with the PKE-SWD-32 PKE contactor modules	PKE-SWD-32	1	**PKE32-COM**

XT Family of Contactors

Contents

Description	*Page*
Motor Control Modules	
Product Identification	**V7-T9-19**
XTPE Electronic Manual Motor Protectors	**V7-T9-20**
XTCE Contactor Modules	
Product Selection	**V7-T9-24**
EMS Electronic Motor Starters	**V7-T9-26**
DS7 Soft Start Controllers	**V7-T9-27**
DE1 Variable Speed Starters	**V7-T9-28**
DC1 Variable Frequency Drives	**V7-T9-30**
DA1 Variable Frequency Drives	**V7-T9-32**

XTCE Contactor Modules

Product Description

The Eaton ***XT*** contactors include non-reversing and reversing contactors, and a variety of related accessories. Because ***XT*** meets IEC, UL®, CSA® and CE standards, it is the perfect product solution for IEC applications all over the world. The compact, space saving and easy to install ***XT*** line of IEC contactors is the efficient and effective solution for customer applications.

Application Description

The ***XT*** line of IEC power control was engineered to provide highly effective control and protection for a variety of loads, including motors, compressors, pumps, resistive, capacitor banks, isolation, and others. ***XT*** also includes IEC ratings for lighting applications as well.

Features and Benefits

- Available with screw or spring cage terminals
- Reversing or non-reversing contactors and starters
- IP20 finger and back-of-hand proof
- Large ambient temperature range, –25 to 50 °C [–13 to 122 °F]
- Low power consumption DC coils
- Built-in NO or NC auxiliary contacts to 32 A
- Plug-in accessories for reduced installation time
- Integrated suppressor 7–150 Vdc operated contactors

Standards and Certifications

- IEC EN 60947
- CE approved
- UL
- CSA
- ATEX
- RoHS

Product Selection

Full Voltage, Non-Reversing Contactors

Frame B

Three-Pole Contactors, Frame B—UL/CSA Ratings

UL General Purpose Ampere Rating	Single-Phase hp Ratings 115 V	200 V	230 V	Three-Phase hp Ratings 200 V	230 V	460 V	575 V	Auxiliary Contacts	Screw Terminal Catalog Number ①
20	1/4	3/4	1	1-1/2	2	3	5	1NO	**XTCE007B10TD**
20	1/4	3/4	1	1-1/2	2	3	5	1NC	**XTCE007B01TD**
20	1/2	1	1-1/2	3	3	5	7-1/2	1NO	**XTCE009B10TD**
20	1/2	1	1-1/2	3	3	5	7-1/2	1NC	**XTCE009B01TD**
20	1	2	2	3	3	10 ③	10	1NO	**XTCE012B10TD**
20	1	2	2	3	3	10 ③	10	1NC	**XTCE012B01TD**
20	1	2	3	5	5	10 ③	10	1NO	**XTCE015B10TD**
20	1	2	3	5	5	10 ③	10	1NC	**XTCE015B01TD**

Frame C

Three-Pole Contactors, Frame C—UL/CSA Ratings

UL General Purpose Ampere Rating	Single-Phase hp Ratings 115 V	200 V	230 V	Three-Phase hp Ratings 200 V	230 V	460 V	575 V	Auxiliary Contacts	Screw Terminal Catalog Number ①
40	2	2	3	5	5	10	15	1NO	**XTCE018C10TD**
40	2	2	3	5	5	10	15	1NC	**XTCE018C01TD**
40	2	3	5	7-1/2	10	15	20	1NO	**XTCE025C10TD**
40	2	3	5	7-1/2	10	15	20	1NC	**XTCE025C01TD**
40	3	5	5	10	10	20	25	1NO	**XTCE032C10TD**
40	3	5	5	10	10	20	25	1NC	**XTCE032C01TD**

Notes

The 7–32A XTCE contactors have positively driven contacts between the integrated auxiliary contact and the auxiliary contact module as well as within the auxiliary contact modules.

DC operated contactors (Frames B–G, 7–150 A) have a built-in suppressor circuit.

① For spring cage terminals, insert **C** after the fourth digit of the catalog number. Example: XTCE**C**007B10A.
For 7–12A XTCEC contactors, the power, auxiliary and coil terminals are spring cage.
For 18–32A XTCEC contactors, the auxiliary and coil terminals are spring cage.
For 40–150A XTCEC contactors, the coil terminals only are spring cage.

Contactor Modules

Contactor Modules

Contactor Modules ①②③

SmartWire-DT module for attachment to XTCE007–XTCE032 contactors and XTRE control relays.
One module is required per contactor.

Description	Pkg. Qty.	Catalog Number
Two digital inputs for voltage-free contacts. One electrical interlock for the surface mounting of reversing combinations. Messages: Switch status contactor, status of the digital inputs 1 and 2. Commands: Contactor actuation.	5	**DIL-SWD-32-001**
Two digital inputs for voltage-free contacts. One electrical interlock for the surface mounting of reversing combinations. 1-0-A switch for manual or automatic operation. Messages: Contactor switching position, status of the digital inputs 1 and 2, 1-0-A switch position. Commands: Contactor actuation.	5	**DIL-SWD-32-002**

PKE Contactor Module

PKE Contactor Module

SmartWire-DT module for connection of XTPE manual motor controllers.
One module is required per contactor and XTPE manual motor protector.

Description	Pkg. Qty.	Catalog Number
Connecting cable between module and XTPE trip block included as standard. One electrical interlock for the surface mounting of reversing starters. 1-0-A switch for manual or automatic operation. Selectable overload relay function for connecting the contactor on overload. Messages: Switch position contactor/PKE/1-0-A switch Motor current in % Thermal motor image in % Trip-indicating auxiliary contact (Overload, Short-circuit,...) Set value of overload releases Set value Verification time (CLASS), Part no. Trip block. Commands: Contactor actuation, activation of overload relay function (ZMR)	4	**PKE-SWD-32**

Design Note

The number of motor starters or XTCE contactors that can be connected is dependent upon the power consumption of the contactor coils. To increase the number of SmartWire-DT modules that can be connected, Powerfeed modules can be used. The SWD-Assist configuration program (download from www.eaton.com/smartwiredt) will automatically check and insert Powerfeed modules as needed based on the number of contactors used and the utilization factors selected.

24 Vdc		XTCE007	XTCE009	XTCE012	XTCE015	XTCE018	XTCE025	XTCE032
Pick-up power	W	3	3	4.5	4.5	12	12	12
Sealing power	W	3	3	4.5	4.5	0.5	0.5	0.5

Reversing Contactors

Reversing Contactor

Reversing Contactors

When using the tool-less reversing link kits on Frame B contactors, a different reversing bridge is required without the A2 coil bridge.

Description	Pkg. Qty.	Catalog Number
Reversing bridge for Frame B contactors on SmartWire-DT	20	**XTCEXRBB-0A2**

Notes

① Take account of the maximum current consumption of the contactor coils per SmartWire-DT line.
② A2 connections must not be linked.
③ Connection terminals for electrical interlocking are not suitable for safety technology.

EMS Electronic Motor Starters

Product Selection

EMS-DOS-…, EMS-ROS-…

Electronic Motor Starters—Complete Devices

Electronic Motor Starters with SmartWire-DT built in do not require a separate module for connection to the SmartWire-DT network. Connection is made directly to the SmartWire-DT flat cable.

Description	Max. Equivalent hp Rating for Three-Phase Motors, 60 Hz				Setting Range of Overload Releases	DC Operation 24 Vdc Catalog Number
	208 V	480 V	AC1	AC3	I_r A	
DOL starting, Motor protection, For connecting to SmartWire-DT. Circuit design: Safety output stage with bypass, three-phase disconnect.	—	1	2.4	2.4	0.18–2.4	**EMS-DO-T-2.4-SWD**
	2	5	9.0	7.6	1.5–9 7 (AC–53a)	**EMS-DO-T-9-SWD**
DOL starting, Motor protection, Emergency-stop actuator. Circuit design: Safety output stage with bypass, three-phase disconnect.	—	1	2.4	2.4	0.18–2.4	**EMS-DOS-T-2.4-SWD** ①
	2	5	9.0	7.6	1.5–9 7 (AC–53a)	**EMS-DOS-T-9-SWD** ①
DOL starting, Reversing start, Motor protection, For connecting to SmartWire-DT. Circuit design: Safety output stage with bypass, three-phase disconnect.	—	1	2.4	2.4	0.18–2.4	**EMS-RO-T-2.4-SWD**
	2	5	9.0	7.6	1.5–9 7 (AC–53a)	**EMS-RO-T-9-SWD**
DOL starting, Reversing start, Motor protection, Emergency-stop actuator. Circuit design: Safety output stage with bypass, three-phase disconnect.	—	1	2.4	2.4	0.18–2.4	**EMS-ROS-T-2.4-SWD** ①
	2	5	9.0	7.6	1.5–9 7 (AC–53a)	**EMS-ROS-T-9-SWD** ①

Note

① EMS-DOS and EMS-ROS starters with emergency stop function have an additional terminal that needs to be connected to 0 V / 24 Vdc to provide an enable signal. (This is in addition to the SmartWire-DT signal.) Actuation of an E-stop will interrupt the 0 V / 24 Vdc connection and also override the SmartWire-DT signal.

DS7 Soft Start Controllers

Product Selection

Soft Start Controllers—Complete Devices

DS7 Series Soft Start Controllers with SmartWire-DT built in do not require a separate module for connection to the SmartWire-DT network. Connection is made directly to the SmartWire-DT flat cable.

Soft starters for three-phase variable-torque loads.
Mains supply voltage (208–480 Vac, 60 Hz).

DS7-… (4 to 12 A)

4 to 12 A

Rated Operational Current A	Assigned Motor Rating at 480 V, 60 Hz hp	U_C 24 Vac/Vdc U_s 24 Vac/Vdc Expanded Temperature Range (Down to –40 °C) Catalog Number
4	2	DS7-34DSX004N0-D ①
7	5	DS7-34DSX007N0-D ①
9	5	DS7-34DSX009N0-D ①
12	10	DS7-34DSX012N0-D ①

DS7-… (16 to 32 A)

16 to 32 A

Rated Operational Current A	Assigned Motor Rating at 480 V, 60 Hz hp	U_C 24 Vac/Vdc U_s 24 Vac/Vdc Expanded Temperature Range (Down to –40 °C) Catalog Number
16	10	DS7-34DSX016N0-D ①
24	15	DS7-34DSX024N0-D ①
32	25	DS7-34DSX032N0-D ①

DS7-… (41 to 100 A)

41 to 100 A

Rated Operational Current A	Assigned Motor Rating at 480 V, 60 Hz hp	U_C 24 Vac/Vdc U_s 24 Vac/Vdc Expanded Temperature Range (Down to –40 °C) Catalog Number
41	30	DS7-34DSX041N0-D
55	40	DS7-34DSX055N0-D
70	50	DS7-34DSX070N0-D
81	60	DS7-34DSX081N0-D
100	75	DS7-34DSX100N0-D

DS7-… (135 to 200 A)

135 to 200 A

Rated Operational Current A	Assigned Motor Rating at 480 V, 60 Hz hp	U_C 24 Vac/Vdc U_s 24 Vac/Vdc Expanded Temperature Range (Down to –40 °C) Catalog Number
135	100	DS7-34DSX135N0-D
160	125	DS7-34DSX160N0-D
200	150	DS7-34DSX200N0-D

Note

① DS7 controllers up to 32 A can be connected with XTPE manual motor protectors (MMP) with the PKE32-COM cable (see **Page V7-T9-21** for details).

PowerXL DE1 Series

Contents

Description	*Page*
Motor Control Modules	
Product Identification	**V7-T9-19**
XTPE Electronic Manual Motor Protectors	**V7-T9-20**
XTCE Contactor Modules	**V7-T9-23**
EMS Electronic Motor Starters	**V7-T9-26**
DS7 Soft Start Controllers	**V7-T9-27**
DE1 Variable Speed Starters	
Product Selection	**V7-T9-29**
DC1 Variable Frequency Drives	**V7-T9-30**
DA1 Variable Frequency Drives	**V7-T9-32**

DE1 Variable Speed Starters

Product Description

Eaton's PowerXL® DE1 variable speed starter offers the advantages of both a motor starter and a variable frequency drive in a single device. The DE1 is a compact and easy-to-use device with the ability to change the speed of the motor with the simplicity of a contactor starter. With 14 basic parameters, SmartWire-DT connectivity and an intuitive configuration module, the DE1 setup and commissioning is easy for any panel builder and MOEM. The DE1 was designed for customers who have concerns of the complexity of a VFD but still require variable frequency and advanced motor protection.

Models rated at 480 volts, three-phase, 50/60 Hz are available in sizes ranging from 0.5 to 10 hp. Models rated at 230 volts, single-phase in/three-phase out, 50/60 Hz are available in sizes ranging from 0.33 to 3 hp.

The DE1 VSS is designed without a keypad to provide a simplistic, cost effective solution. Units are shipped without a keypad. In order to change parameters, there are accessories such as the configuration module that can change up to 5 parameters or connectivity products to connect to the drivesConnect PC Tool.

Features

- Compact, space-saving design
- Rugged design rated up to 60 °C without derating
- DIN rail and screw mountable
- Narrow footprint for true side-by-side installation
- Rated for group motor applications
- Low capacitor design for low harmonics
- Control terminal blocks
  - Three digital inputs
  - One digital/analog (programmable) input
  - One relay output
- Contactor style power wiring
- RS-485/Modbus as standard
- Efficient, simple design without a keypad
  - Three indicating LEDs for fault and condition status
- Reliable design—
  150% for 60 s
  175% for 2 s

Standards and Certifications

Product

- Complies with EN 61800-3

Safety

- IEC 61800-5-1
- CE
- UL
- CSA/cUL
- cTick
- UKRSekpro
- GOST R
- RoHS compliant

Product Selection

IP20

DE1 Series IP20 Enclosure Drives

hp ①	kW	Volts	100% Continuous Current (A)	Frame Size	Catalog Number ②
0.33	0.25	200–240 V single-phase in/ 230 V three-phase out	1.4	1	**DE1-121D4NN-N20N**
0.5	0.37		2.3	1	**DE1-122D3NN-N20N**
0.75	0.55		2.7	1	**DE1-122D7NN-N20N**
1	0.75		4.3	1	**DE1-124D3NN-N20N**
2	1.5		7	1	**DE1-127D0NN-N20N**
3	2.2		9.6	2	**DE1-129D6NN-N20N**
0.5	0.37	380–480 V three-phase in/ 480 V three-phase out	1.3	1	**DE1-341D3NN-N20N**
1	0.75		2.1	1	**DE1-342D1NN-N20N**
2	1.5		3.6	1	**DE1-343D6NN-N20N**
3	2.2		5	2	**DE1-345D0NN-N20N**
4	3		6.6	2	**DE1-346D6NN-N20N**
5	4		8.5	2	**DE1-348D5NN-N20N**
7.5	5.5		11.3	2	**DE1-34011NN-N20N**
10	7.5		16	2	**DE1-34016NN-N20N**

DX-NET-SWD3

SmartWire-DT DE1 VSS Module

SmartWire-DT module for connecting DE1 variable speed starters (VSS) to the SmartWire-DT network.

Description	For Use With …	Pkg. Qty.	Catalog Number
1-0-A switch for manual or automatic operation	DE1 DC1	1	**DX-NET-SWD3**

Notes

① For all applications, select the unit such that the motor current is less than or equal to the rated continuous output current.

② These are constant torque/high overload rated drives.

PowerXL DC1 Series Drives

Contents

Description	*Page*
Motor Control Modules	
Product Identification	**V7-T9-19**
XTPE Electronic Manual Motor Protectors	**V7-T9-20**
XTCE Contactor Modules	**V7-T9-23**
EMS Electronic Motor Starters	**V7-T9-26**
DS7 Soft Start Controllers	**V7-T9-27**
DE1 Variable Speed Starters	**V7-T9-28**
DC1 Variable Frequency Drives	
Product Selection	**V7-T9-31**
DA1 Variable Frequency Drives	**V7-T9-32**

DC1 Variable Frequency Drives

Product Description

Eaton's PowerXL® DC1 variable frequency drives are the next generation of drives specifically engineered for today's machinery applications.

The DC1 is compact with only 14 basic parameters, SmartWire-DT connectivity, and outstanding ease of mounting and installation. The DC1 is perfect for quick commissioning and is ideal for panel builders. This drive supports single-phase motor applications, and detachable terminal blocks make control wiring much easier.

Models rated at 480 volts, three-phase, 50/60 Hz are available in sizes ranging from 1 to 30 hp ②. Models rated at 240 volts, single- or three-phase, 50/60 Hz are available in sizes ranging from 0.5 to 15 hp ②. Models rated at 115 volts, single-phase, 50/60 Hz are available in the 0.5 to 3 hp size range.

Features

- Compact, space-saving design
- Rugged and reliable—175% for 2 s, 50 °C rated
- DIN rail and screw mountable (FS1 and FS2)
- Side-by-side installation
- Industry-leading efficiency delivers energy savings to the customer
- Optional integrated EMC filters make the unit suitable for commercial and industrial networks
- Brake chopper as standard in frames 2 and higher
- Temperature-controlled fan
- RS-485/Modbus® and CANopen™ as standard
- PI controller as standard
- SmartWire capability
- Removable I/O terminal blocks
- Contactor style power wiring
- Designed for shaded-pole, single-phase motors and permanent split capacitor single-phase motors
- Designed to run surface mounted (SPM) and rotor in-built (IPM) permanent magnet motors ③

Standards and Certifications

Product

- Complies with EN61800-3 (2004)

EMC (At Default Settings)

- EMC Category C1, C2 and C3 at default settings (1 m, 5 m, 25 m)

Safety ①

- 61800-5-1
- EN 60529
- CE
- UL
- cUL
- UkrSepro
- c-Tick
- RoHS compliant

Notes

① See unit nameplate for more detailed approvals.
② Available June 2015.
③ Available September 2015.

Product Selection

IP20

DC1 Series IP20 Enclosure Drives ①

hp ②	kW	Volts	100% Continuous Current In (A)	Frame Size ③	Catalog Number
0.5	0.37	115 V single-phase in/ ④ 115 V single-phase out	7	1	**DC1-S17D0NN-A20N**
0.75	0.55		10.5	2	**DC1-S1011NB-A20N**
0.5	0.37	200–240 V single-phase in/ ④ 200–240 V single-phase out	4.3	1	**DC1-S24D3NN-A20N** ⑤
1	0.75		7	1	**DC1-S27D0NN-A20N** ⑤
1.5	1.1		10	2	**DC1-S2011NB-A20N** ⑤
0.5	0.37	115 V single-phase in/ 230 V three-phase out	2.3	1	**DC1-1D2D3NN-A20N**
1	0.75		4.3	1	**DC1-1D4D3NN-A20N**
1.5	1.1		5.8	2	**DC1-1D5D8NB-A20N**
0.5	0.37	200–240 V single-phase in/ 230 V three-phase out	2.3	1	**DC1-122D3NN-A20N** ⑤
1	0.75		4.3	1	**DC1-124D3NN-A20N** ⑤
2	1.5		7	1	**DC1-127D0NN-A20N** ⑤
2	1.5		7	2	**DC1-127D0NB-A20N** ⑤
3	2.2		10.5	2	**DC1-12011NB-A20N** ⑤
5	4		15	3	**DC1-12015NB-A20N**
0.5	0.37	200–240 V three-phase in/ 230 V three-phase out	2.3	1	**DC1-322D3NN-A20N**
1	0.75		4.3	1	**DC1-324D3NN-A20N**
2	1.5		7	1	**DC1-327D0NN-A20N**
2	1.5		7	2	**DC1-327D0NB-A20N** ⑤
3	2.2		10.5	2	**DC1-32011NB-A20N** ⑤
5	4		18	3	**DC1-32018NB-A20N** ⑤
7.5	5.5		24	4	**DC1-32024NB-A20N** ⑤⑥
10	7.5		30	4	**DC1-32030NB-A20N** ⑤⑥
15	11		46	4	**DC1-32046NB-A20N** ⑤⑥
1	0.75	380–480 V three-phase in/ 480 V three-phase out	2.2	1	**DC1-342D2NN-A20N** ⑤
2	1.5		4.1	1	**DC1-344D1NN-A20N** ⑤
2	1.5		4.1	2	**DC1-344D1NB-A20N** ⑤
3	2.2		5.8	2	**DC1-345D8NB-A20N** ⑤
5	4		9.5	2	**DC1-349D5NB-A20N** ⑤
7.5	5.5		14	3	**DC1-34014NB-A20N** ⑤
10	7.5		18	3	**DC1-34018NB-A20N** ⑤
15	11		24	3	**DC1-34024NB-A20N** ⑤
20	15		30	4	**DC1-34030NB-A20N** ⑤⑥
25	18.5		39	4	**DC1-34039NB-A20N** ⑤⑥
30	22		46	4	**DC1-34046NB-A20N** ⑤⑥

DX-NET-SWD3

SmartWire-DT DC1 VFD Module

SmartWire-DT module for connecting DC1 variable frequency drive (VFD) to the SmartWire-DT network.

Description	For Use With …	Pkg. Qty.	Catalog Number
1-0-A switch for manual or automatic operation	DE1 DC1	1	**DX-NET-SWD3**

Notes

① These are constant torque/high overload rated drives.
② For all applications, select the unit such that the motor current is less than or equal to the rated continuous output current.
③ Brake chopper circuit available as standard in frames 2 and 3.
④ Only for use with shaded pole or split capacitor single-phase motors.
⑤ RFI version available. Substitute with DC1-*****F*-**** for this option.
⑥ Frame size 4 available June 2016.

PowerXL DA1 Series Drives

Contents

Description	*Page*
Motor Control Modules	
Product Identification	**V7-T9-19**
XTPE Electronic Manual Motor Protectors	**V7-T9-20**
XTCE Contactor Modules	**V7-T9-23**
EMS Electronic Motor Starters	**V7-T9-26**
DS7 Soft Start Controllers	**V7-T9-27**
DE1 Variable Speed Starters	**V7-T9-28**
DC1 Variable Frequency Drives	**V7-T9-30**
DA1 Variable Frequency Drives	
Product Selection	**V7-T9-33**

DA1 Variable Frequency Drives

Product Description

Eaton's PowerXL® DA1 variable frequency drives are the next generation of drives specifically engineered for today's machinery applications.

DA1 is the perfect match for demanding OEM applications. High-performance processor, safe torque off, multiple fieldbus protocols including SmartWire-DT, sensorless vector control and the possibility to operate permanent magnet motors are sure to leave a lasting impression.

Models rated at 480 volts, three-phase, 50/60 Hz are available in sizes ranging from 1 to 15 hp. Models rated at 240 volts, single- or three-phase, 50/60 Hz are available in sizes ranging from 0.5 to 7.5 hp. Models rated at 575 volts, three-phase, 50/60 Hz are available in sizes ranging from 1 to 20 hp.

Features

- Compact, space-saving design
- Rugged and reliable—200% for 4 s 50 °C rated
- DIN rail and screw mountable (FS1 and FS2)
- Side-by-side installation
- Industry-leading efficiency delivers energy savings to the customer
- Integrated EMC filters make the unit suitable for commercial and industrial networks
- Brake chopper as standard
- Temperature-controlled fan
- RS-485/Modbus® and CANopen™ as standard
- PID controller as standard
- Removable I/O terminal blocks
- Contactor style power wiring
- 200% torque at zero speed
- Designed to run surface mounted (SPM) and rotor in-built (IPM) permanent magnet motors
- PLC programming
- Closed loop
- Conformal coated boards
- Optional SmartWire-DT connection module

Standards and Certifications

Product

- Complies with EN61800-3 (2004)

EMC (At Default Settings)

- EMC Category C1, C2 and C3 at default settings (1 m, 5 m, 25 m)

Safety ①

- 61800-5-1
- EN 60529
- CE
- UL
- cUL
- DNV
- UkrSepro
- c-Tick
- RoHS compliant

Note

① See unit nameplate for more detailed approvals.

Product Selection

IP20

DA1 Series IP20 Enclosure Drives ①

hp ②	kW	Volts	100% Continuous Current In (A)	Frame Size ③	Catalog Number
1	0.75	200–240 V single-phase in/ 230 V three-phase out	4.3	2	**DA1-124D3FB-A20C**
2	1.5		7	2	**DA1-127D0FB-A20C**
3	2.2		10.5	2	**DA1-12011FB-A20C**
1	0.75	200–240 V three-phase in/ 230 V three-phase out	4.3	2	**DA1-324D3FB-A20C**
2	1.5		7	2	**DA1-327D0FB-A20C**
3	2.2		10.5	2	**DA1-32011FB-A20C**
5	4		18	3	**DA1-32018FB-A20C**
7.5	5.5		24	3	**DA1-32024FB-A20C**
1	0.75	380–480 V three-phase in/ 460 V three-phase out	2.2	2	**DA1-342D2FB-A20C**
2	1.5		4.1	2	**DA1-344D1FB-A20C**
3	2.2		5.8	2	**DA1-345D8FB-A20C**
5	4		9.5	2	**DA1-349D5FB-A20C**
7.5	5.5		14	3	**DA1-34014FB-A20C**
10	7.5		18	3	**DA1-34018FB-A20C**
15	11		24	3	**DA1-34024FB-A20C**
1	0.75	500–600 V three-phase in/ 575 V three-phase out	2.1	2	**DA1-352D1NB-A20C**
2	4.5		3.1	2	**DA1-353D1NB-A20C**
3	2.2		4.1	2	**DA1-354D1NB-A20C**
5	4		6.5	2	**DA1-356D5NB-A20C**
7.5	5.5		9	2	**DA1-359D0NB-A20C**
10	7.5		12	3	**DA1-35012NB-A20C**
15	11		17	3	**DA1-35017NB-A20C**
20	15		22	3	**DA1-35022NB-A20C**

DX-NET-SWD_

SmartWire-DT DA1 VFD Modules

Description	For Use With …	Pkg. Qty.	Catalog Number
1-0-A switch for manual or automatic operation	DA1	1	**DX-NET-SWD1**

Notes

① These are constant torque/high overload rated drives.
② For all applications, select the unit such that the motor current is less than or equal to the rated continuous output current.
③ Brake chopper circuit available as standard in frames 2 and 3.

Pilot Device Modules

Contents

Description	*Page*
Pilot Device Modules	
M22 Contact and LED Modules	
Product Selection	**V7-T9-35**
Accessories	**V7-T9-36**
M22 Control Stations (8-Conductor)	**V7-T9-37**

Pilot Device Modules

M22 Contact and LED Modules

Product Description

Pilot device modules fit onto standard M22 and M22M (metal bezel) pilot devices. Single and double contact modules with and without LEDs are available to meet a wide variety of control circuit requirements.

These modules facilitate direct connection to the SmartWire-DT flat cable and eliminate the traditional point-to-point wiring to the PLC input and output modules.

Features

- Built-in diagnostic bi-color LEDs on each module
- Connection to SmartWire-DT flat cable

M22 and M22M Pushbuttons—Non-Illuminated and Illuminated

See Volume 7—Logic Control, Operator Interface and Connectivity Solutions, CA08100008E, Tab 1 for complete product selection.

Product Selection

M22 Pilot Device Modules Connections

M22 Front Mount Contact Modules, without LEDs

	Number of SPDT Contacts	Contact Symbol	Mounting Positions	Pkg. Qty.	Catalog Number
Front Mount					
M22-SWD-K11	1		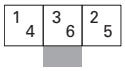	20	M22-SWD-K11
M22-SWD-K22	2	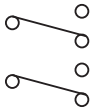	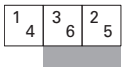	10	M22-SWD-K22

M22 Front Mount Contact Modules, with LEDs

	Number of SPDT Contacts	Contact Symbol	Mounting Positions	Color LED	Pkg. Qty.	Catalog Number
Front Mount						
M22-SWD-K11LED_ 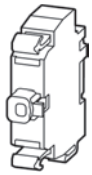	1		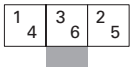	○	20	M22-SWD-K11LED-W
				●		M22-SWD-K11LED-B
				●		M22-SWD-K11LED-G
				●		M22-SWD-K11LED-R
M22-SWD-K22LED_ 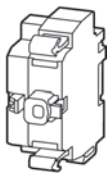	2	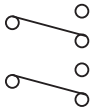	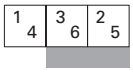	○	10	M22-SWD-K22LED-W
				●		M22-SWD-K22LED-B
				●		M22-SWD-K22LED-G
				●		M22-SWD-K22LED-R

M22 Front Mount LED Modules

M22-SWD-LED_

Mounting Positions	Color LED	Pkg. Qty.	Catalog Number
Front Mount			
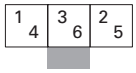	○	20	M22-SWD-LED-W
	●		M22-SWD-LED-B
	●		M22-SWD-LED-G
	●		M22-SWD-LED-R

M22 Potentiometer

	Description	Pkg. Qty.	Catalog Number
M22-R-SWD-R	M22 SmartWire-DT complete potentiometer (front element, potentiometer module and adapter)	1	**M22-R-SWD-R**
M22-R-SWD	M22 potentiometer front element	1	**M22-R-SWD**
M22-SWD-R	M22 potentiometer SmartWire-DT module	1	**M22-SWD-R**

M22 Tuner Selectors

	Description	Pkg. Qty.	Catalog Number
M22-INC-SWD-INC	M22 SmartWire-DT complete tuner selector	1	**M22-INC-SWD-INC**
M22-INC-SWD	M22 tuner selector front element	1	**M22-INC-SWD**
M22-SWD-R	M22 tuner selector SmartWire-DT module	1	**M22-SWD-INC**

Accessories

M22-SWD-A4

Contact Block/Module Adapter

For M22 four-way pushbuttons and joysticks using SmartWire-DT, a special contact block/module adapter is required.

Description	Pkg. Qty.	Catalog Number
Four-way adapter for SmartWire-DT modules	10	**M22-SWD-A4**

M22 Control Stations

Contents

Description	*Page*
Pilot Device Modules	
M22 Contact and LED Modules	**V7-T9-34**
M22 Control Stations (8-Conductor)	**V7-T9-37**

M22 Control Stations (8-Conductor)

Product Description

M22 and M22M control stations are available in 1, 2, 3, 4 and 6-element configurations. Standard M22 surface mount enclosures accept the SmartWire-DT printed circuit board (PCB) interface. The M22 base mount modules connect to the PCB and attach to the base of the enclosure.

These PCB require the use of the 8-conductor round cable and can be wired directly with quick disconnect enclosure bushings. See **Page V7-T9-17** for details on this round cabling.

Remote pushbutton enclosures can also be constructed and connected to the 5-conductor round SmartWire-DT On Machine cabling system. See **Page V7-T9-53** for details.

Product Selection

Surface Mounting Enclosures

	Description	Catalog Number
M22-IY1-PG	Yellow top, black base for emergency-stop operators	**M22-IY1**
M22-IY-PG	One-element enclosure	**M22-I1**
	Two-element enclosure	**M22-I2**
	Three-element enclosure	**M22-I3**
	Four-element enclosure	**M22-I4**
	Six-element enclosure	**M22-I6**

M22 Base Mount Contact Modules, without LEDs

	Number of SPDT Contacts	Contact Symbol	Mounting Positions	Pkg. Qty.	Catalog Number
	Base Mount				
M22-SWD-KC11 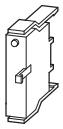	1		2 3 1	20	**M22-SWD-KC11**
M22-SWD-KC22 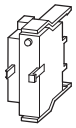	2	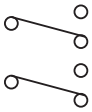	2 3 1	10	**M22-SWD-KC22**

M22 Base Mount Contact Modules, with LEDs

	Number of SPDT Contacts	Contact Symbol	Mounting Positions	Color LED	Pkg. Qty.	Catalog Number
	Base Mount					
M22-SWD-K11LED_ 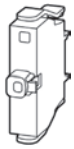	1		2 3 1	○	20	**M22-SWD-K11LEDC-W**
				●		**M22-SWD-K11LEDC-B**
				●		**M22-SWD-K11LEDC-G**
				●		**M22-SWD-K11LEDC-R**
M22-SWD-K22LED_ 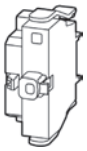	2	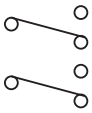	2 3 1	○	10	**M22-SWD-K22LEDC-W**
				●		**M22-SWD-K22LEDC-B**
				●		**M22-SWD-K22LEDC-G**
				●		**M22-SWD-K22LEDC-R**

M22 Base Mount LED Modules

	Mounting Positions	Color LED	Pkg. Qty.	Catalog Number
	Base Mount			
M22-SWD-LEDC_	2 3 1	○	20	**M22-SWD-LEDC-W**
		●		**M22-SWD-LEDC-B**
		●		**M22-SWD-LEDC-G**
		●		**M22-SWD-LEDC-R**

Other Components

	Description	Length	Pkg. Qty.	Catalog Number
	Universal (Placeholder) Module			
Universal Base	Base mount	—	20	**M22-SWD-NOPC**
	Control Station PCB Jumper			
PCB Jumper	For bringing open mounting locations on the control station printed circuit board	—	1	**M22-SWD-SEL8-10**

PCB

Control Station PCBs

Description	Pkg. Qty.	Catalog Number
For surface mounting M22 enclosures and for base-mount pilot device modules. Includes a built-in switchable terminating resistor.		
Element enclosure PCB 1	1	**M22-SWD-I1-LP01**
Element enclosure PCB 2	1	**M22-SWD-I2-LP01**
Element enclosure PCB 3	1	**M22-SWD-I3-LP01**
Element enclosure PCB 4	1	**M22-SWD-I4-LP01**
Element enclosure PCB 6	1	**M22-SWD-I6-LP01**

Enclosure Bushings

	Description	Pkg. Qty.	Catalog Number
Bushing Socket	Enclosure bushing, 8-pole socket, M20	1	**SWD4-SF8-20**
Bushing Socket	Enclosure bushing, 8-pole plug, M20	1	**SWD4-SM8-20**
Cord Grip	Round cable cord grip, M20	1	**V-M20**

Stacklight Modules with SmartWire-DT

Contents

Description ***Page***

Stacklight Modules with SmartWire-DT
SL4 and SL7 Stacklight Base Modules
Product Selection **V7-T9-41**

Stacklight Base Modules with SmartWire-DT

Product Description

SL7 and SL4 Stacklights from Eaton provide reliable control over all key processes and machine availability.
Now available in two sizes, 70 mm (SL7) and 40 mm (SL4), the new stacklights are engineered to keep you informed about potential material requirements, downtime and hazards. Modules are available in a wide selection of audible, illuminating and mounting options that are well suited to adapt to any industrial application.

Highly Modular and Versatile Line

- Easily configurable components
- Simple bayonet mounting mechanism for quick assembly
- Flexible mounting and lighting options
- Volume-adjustable alarms

Optimal Performance in Rugged Applications

- All elements have IP66 and UL Type 4/4X/13 ratings for protection against strong jets of water
- Bright and efficient LEDs with a lifespan of up to 100,000 hours
- High-performance LEDs for maximum illumination in direct sunlight
- Acoustic modules with up to 100 dB sound levels
- Operating temperatures: –22 to +140 °F (–30 to +60 °C)

Features

- Six lens colors: red, amber, yellow, green, blue, white
- Continuous, flashing, strobe and multi-strobe lighting functions
- Mono-tone, dual-tone and multi-tone audible alarms
- LED or incandescent lighting options
- Control up to five modules on a single stack

Benefits

- Simplified twist-and-lock assembly, no tools required
- Compact components reduce inventory requirements and increase flexibility
- Versatile hardware for quick installation and minimized downtime
- Slim 40 mm size is ideal for applications with constrained space
- Simplified wiring with SmartWire-DT connectivity
- Ideal for indoor and outdoor usage

Standards and Certifications

- UL 508—File No. E29184
- IEC/EN 60947-5-1
- CSA C22.2 No. 14-10
- CSA C22.2 No. 94-91
- CSA Class No. NKCR7

Listed

SL4 and SL7

See Volume 7—Logic Control, Operator Interface and Connectivity Solutions, CA08100008E, Tab 2 for complete product selection.

Stacklight Base Modules

Product Selection

SL4 and SL7—SmartWire-DT Versions for Control Cabinet Mounting

When mounted to a control cabinet, SL4 and SL7 stacklight base modules connect directly to the SmartWire-DT flat cable with two flat plug sockets. Stacklights in this case can be configured with up to five 24 Vdc light modules including an alarm unit. Jumpers on the base module select whether the stacklight is powered from the flat cable or an external 24 Vdc power supply. For this application, select the stacklight base models listed below.

	Description	Tube Length	For Use With	Catalog Number
SL4-SWD	Base with base adapter for rapid mounting and wiring Blade terminal SWD4-8MF2 Max. 0.3 A per module External power supply connectable (24 Vdc)	100 mm	SL4 40 mm diameter stacklights 24 Vdc See Volume 7, Tab 2 for light and alarm module selection	**SL4-SWD**
SL7-SWD	Base with base adapter for rapid mounting and wiring Blade terminal SWD4-8MF2 Max. 0.3 A per module External power supply connectable (24 Vdc)	100 mm	SL7 70 mm diameter stacklights 24 Vdc See Volume 7, Tab 2 for light and alarm module selection	**SL7-SWD**

SL4 and SL7—SmartWire-DT Versions for On Machine Mounting

Remote stacklights with up to three elements can also be constructed and connected to the 5-conductor round SmartWire-DT On Machine cabling system when the stacklight is located away from the main machine control cabinet.

See **Page V7-T9-55** for details.

On Machine Components

Contents

Description	*Page*
On Machine Components	
Machine Mount I/O Modules—Digital	**V7-T9-43**
Machine Mount I/O Modules—Analog	**V7-T9-45**
I/O Splitters	**V7-T9-46**
Other I/O Connections	**V7-T9-46**
Valve Connectors	**V7-T9-47**
Machine Mount Powerfeed Modules	**V7-T9-47**
Panel Transition Components	**V7-T9-48**
SmartWire-DT Round Bus Cables	**V7-T9-49**
Power Cables—Externally Powered I/O Models	**V7-T9-50**
Other System Components	**V7-T9-52**

On Machine Components

Product Description

At the edge of the control cabinet, the SmartWire-DT system transitions from the 8-conductor flat cable to a 5-conductor round cable with standard DC M12 barrel connectors, using simple transition adapters that mount through the panel wall.

This round cable has five conductors, uses standard DC M12 barrel connectors, and is 300 V rated. It is used outside the control panel to connect machine mount (IP69K washdown-rated) I/O modules to the SmartWire-DT system for use with peripherals such as sensors, enclosed pushbuttons, remote enclosed contactors, pneumatic and hydraulic valves, stacklights and other remote devices. This single cable is used both to provide power to connected devices and to carry I/O signals.

Machine mountable I/O modules are connected as nodes on the SmartWire-DT network and allow standard or generic devices to be connected to the SmartWire-DT system. They can be connected anywhere around the machine with up to 2000 ft and 99 machine mount I/O modules possible with a single cable connection.

Features

- Modules with digital and analog channels to accommodate a wide variety of input and output devices
- Modules available in, single connector (1–2 I/O channel), dual connector (2–4 I/O channel), quad connector (4–8 I/O channel), and octal connector (8–16 I/O channel) versions to size exactly to your machine I/O needs at a particular device mounting location (quad and octal versions available in Q4 2016)
- Quad and octal block versions with separate power connection for discrete control of dedicated output channels
- Compatible with a wide range of sensors and actuators for easy integration into any machine design
- Most models offer 2 I/O channels per connection point when used with accessory splitters
- Special version available with 3 I/O channels on a single connection point to be compatible with 3-element stacklights and 3-element pushbutton stations using a single I/O cable
- Most versions provide configurable I/O channels to allow for selection as input or output in any combination
- Integrated 24 Vdc power and communications with single 5-conductor cable using standard DC M12 connectors
- Complete Plug & Play solution, integrated with In Panel SmartWire-DT wiring components including auto-addressing feature
- Connection of up to 99 modules and up to 2000 feet of cable on a single branch of the wiring system
- Built-in diagnostic bi-color LEDs on each module
- IP69K enclosure ratings for use in harsh washdown applications
- Tool-free mounting options
- Vertical and flat mounting possible

Product Selection

Machine Mount I/O Modules—Digital

SmartWire-DT I/O modules for connection to most digital input and output devices. All EU1E and EU2E models receive power and I/O communications signals on the SmartWire-DT round bus cable shown on **Page V7-T9-49**. EU6E and EU8E models are offered in two versions—the first version is similar to the EU1E/EU2E models and receives power and I/O communications signals on the SmartWire-DT round bus cable. The second version offers an external power connection that gives the user discrete control of machine actuation outputs. This can be useful in a variety of different machine control situations including machine safety applications.

EU1E Models

EU2E Models

EU6E Models
No external power

EU8E Models
No external power

EU6E Models
External power

EU8E Models
External power

	Description	Number of Dedicated Inputs	Number of Dedicated Outputs	Number of Configurable Input/Output Channels	Catalog Number
EU1E-SWD_	One digital input channel Messages: Status of the digital input 1 Commands: None	1	0	0	**EU1E-SWD-1DX**
	Two digital input channels Messages: Status of the digital inputs 1 and 2 Commands: None	2	0	0	**EU1E-SWD-2DX**
	Two configurable digital input/output channels Messages: Status of the digital inputs 1 and/or 2 (if configured as inputs) Commands: Actuation of outputs 1 and/or 2 (if configured as outputs)	0	0	2	**EU1E-SWD-2DD**
EU2E-SWD_	Two digital input channels Messages: Status of the digital inputs 1 and 2 Commands: None	2	0	0	**EU2E-SWD-2DX**
	Four digital input channels Messages: Status of the digital inputs 1, 2, 3 and 4 Commands: None	4	0	0	**EU2E-SWD-4DX**
	Four configurable digital input/output channels Messages: Status of the digital inputs 1 and/or 2 and/or 3 and/or 4 (if configured as inputs) Commands: Actuation of outputs 1 and/or 2 and/or 3 and/or 4 (if configured as outputs) Note: I/O channels are arranged with channels 1 and 2 wired to I/O connector X1 and channels 3 and 4 wired to I/O connector X2	0	0	4	**EU2E-SWD-4DD**
	Four configurable digital input/output channels Messages: Status of the digital inputs 1 and/or 2 and/or 3 and/or 4 (if configured as inputs) Commands: Actuation of outputs 1 and/or 2 and/or 3 and/or 4 (if configured as outputs) Note: I/O channels are arranged with channel 1 wired to I/O connector X1 and channels 2, 3 and 4 wired to I/O connector X2	0	0	4	**EU2E-SWD-4DD-1**

Machine Mount I/O Modules—Digital, continued

SmartWire-DT I/O modules for connection to most digital input and output devices.

	Description	Number of Dedicated Inputs	Number of Dedicated Outputs	Number of Configurable Input/Output Channels	Catalog Number
EU6E-SWD_	**Quad: 4/8-Channel Multiblock Modules—no external power required**				
	Eight digital input channels Messages: Status of the digital inputs 1, 2, 3, 4, 5, 6, 7 and 8 Commands: None Note: This model receives power from regular SmartWire-DT cabling and does not require any external power connection	8	0	0	**EU6E-SWD-8DX**
	Eight configurable digital input/output channels Messages: Status of the digital inputs 1 and/or 2 and/or 3 and/or 4 and/or 5 and/or 6 and/or 7 and/or 8 (if configured as inputs) Commands: Actuation of the digital outputs 1 and/or 2 and/or 3 and/or 4 and/or 5 and/or 6 and/or 7 and/or 8 (if configured as outputs) Note: This model receives power from regular SmartWire-DT cabling and does not require any external power connection	0	0	8	**EU6E-SWD-8DD**
	4/8-Channel Multiblock Modules—external power required				
EU6E-SWD_	Two digital input channels, two digital output channels Messages: Status of the digital inputs 1 and 2 Commands: Actuation of the digital outputs 1 and 2 Note: This model has an external power connection for power to output channels only	2	2	0	**EU6E-SWD-2D2D-1**
	Two digital input channels, two digital output channels Messages: Status of the digital inputs 1 and 2 Commands: Actuation of the digital outputs 1 and 2 Note: This model has an external power connection for power to output channels only Note: This model has high-current output channels rated for 2 A each channel	2	2	0	**EU6E-SWD-2D2D-2**
	Four digital output channels Messages: None Commands: Actuation of the digital outputs 1, 2, 3 and 4 Note: This model has an external power connection for power to output channels only	0	4	0	**EU6E-SWD-4XD-1**
	Four digital output channels Messages: None Commands: Actuation of the digital outputs 1, 2, 3 and 4 Note: This model has an external power connection for power to output channels only Note: This model has high-current output channels rated for 2 A each channel	0	4	0	**EU6E-SWD-4XD-2**
	Four digital input channels, four digital output channels Messages: Status of the digital inputs 1, 2, 3 and 4 Commands: Actuation of the digital outputs 1, 2, 3 and 4 Note: This model has an external power connection for power to output channels only	4	4	0	**EU6E-SWD-4D4D-1**
	Four digital input channels, four digital output channels Messages: Status of the digital inputs 1, 2, 3 and 4 Commands: Actuation of the digital outputs 1, 2, 3 and 4 Note: This model has an external power connection for power to output channels only Note: This model has high-current output channels rated for 2 A each channel	4	4	0	**EU6E-SWD-4D4D-2**
	Eight digital output channels Messages: None Commands: Actuation of the digital outputs 1, 2, 3, 4, 5, 6, 7 and 8 Note: This model has an external power connection for power to output channels only	0	8	0	**EU6E-SWD-8XD-1**
	Octal: 8/16-Channel Multiblock Modules—no external power required				
EU8E-SWD_	Sixteen digital input channels Messages: Status of the digital inputs 1, 2, 3, 4, 5, 6, 7, 8, 9, 10, 11, 12, 13, 14, 15 and 16 Commands: None Note: This model receives power from regular SmartWire-DT cabling and does not require any external power connection	16	0	0	**EU8E-SWD-16DX**
	Sixteen configurable digital input/output channels Messages: Status of the digital inputs 1 and/or 2 and/or 3 and/or 4 and/or 5 and/or 6 and/or 7 and/or 8 and/or 9 and/or 10 and/or 11 and/or 12 and/or 13 and/or 14 and/or 15 and/or 16 (if configured as inputs) Commands: Actuation of the digital outputs 1 and/or 2 and/or 3 and/or 4 and/or 5 and/or 6 and/or 7 and/or 8 and/or 9 and/or 10 and/or 11 and/or 12 and/or 13 and/or 14 and/or 15 and/or 16 (if configured as outputs) Note: This model receives power from regular SmartWire-DT cabling and does not require any external power connection	0	0	16	**EU8E-SWD-16DD**

Machine Mount I/O Modules—Digital, continued

SmartWire-DT I/O modules for connection to most digital input and output devices.

	Description	Number of Dedicated Inputs	Number of Dedicated Outputs	Number of Configurable Input/Output Channels	Catalog Number
	8/16-Channel Multiblock Modules—external power required				
EU8E-SWD_	Four digital input channels, four digital output channels Messages: Status of the digital inputs 1, 2, 3 and 4 Commands: Actuation of the digital outputs 1, 2, 3 and 4 Note: This model has an external power connection for power to output channels only	4	4	0	**EU8E-SWD-4D4D-1**
	Eight digital input channels, eight digital output channels Messages: Status of the digital inputs 1, 2, 3, 4, 5, 6, 7 and 8 Commands: Actuation of the digital outputs 1, 2, 3, 4, 5, 6, 7 and 8 Note: This model has an external power connection for power to output channels only	8	8	0	**EU8E-SWD-8D8D-1**
	Eight digital output channels Messages: None Commands: Actuation of the digital outputs 1, 2, 3, 4, 5, 6, 7 and 8 Note: This model has an external power connection for power to output channels only	0	8	0	**EU8E-SWD-8XD-1**
	Sixteen digital output channels Messages: None Commands: Actuation of the digital outputs 1, 2, 3, 4, 5, 6, 7, 8, 9, 10, 11, 12, 13, 14, 15 and 16 Note: This model has an external power connection for power to output channels only	0	16	0	**EU8E-SWD-16XD-1**

Machine Mount I/O Modules—Analog

SmartWire-DT I/O modules for connection to various analog input and output devices.

	Description	Number of Dedicated Inputs	Number of Dedicated Outputs	Number of Configurable Input/Output Channels	Catalog Number
EU1E-SWD_	One analog input channel 0–10 Vdc Messages: Analog input level Commands: None	1	0	0	**EU1E-SWD-1AX-1**
	One analog input channel 0–20 mA Messages: Analog input level Commands: None	1	0	0	**EU1E-SWD-1AX-2**
	One analog output channel 0–10 Vdc Messages: None Commands: Analog output level	0	1	0	**EU1E-SWD-1XA-1**
	One analog output channel 0–20 mA Messages: None Commands: Analog output level	0	1	0	**EU1E-SWD-1XA-2**
	One encoder input channel 30 kHz Messages: Encoder count signals Commands: None	1	0	0	**EU1E-SWD-1CX**
EU2E-SWD_	Two RTD temperature input channels Messages: Temperature input level Commands: None	2	0	0	**EU2E-SWD-2PT**

I/O Splitters

To allow for use of both available channels on applicable digital input/output modules.

SWD4-SP_

Description	Pkg Qty.	Catalog Number
Combines two devices into a single I/O connection point. Both device connections are 4-pin DC M12. Power is common between devices, and the splitter module is wired to Pin 4 for each connected sensor, actuator or other device.	1	**SWD4-SP-4124**
Combines two devices into a single I/O connection point. Both device connections are 4-pin DC M12. Power is common between devices, and the splitter module is wired to Pin 2 for each connected sensor, actuator or other device.	1	**SWD4-SP-4122**
Combines two devices into a single I/O connection point. Both device connections are 4-pin M8. Power is common between devices, and the splitter module is wired to Pin 4 for each connected sensor, actuator or other device.	1	**SWD4-SP-4084**
Combines two devices into a single I/O connection point. Both device connections are 4-pin M8. Power is common between devices, and the splitter module is wired to Pin 2 for each connected sensor, actuator or other device.	1	**SWD4-SP-4082**
Combines two devices into a single I/O connection point. Both device connections are 3-pin M8. Power is common between devices, and the splitter module is wired to Pin 2 for each connected sensor, actuator or other device.	1	**SWD4-SP-3084**

Other I/O Connections

For connection to I/O devices with and without built-in M12 connections.

SWD4-PR_

SWD4-2LR5-1-2S

SWD4-1LR5-S

V-M20

Description	Pkg Qty.	Catalog Number
Enclosure and Remote Device M12 Receptacles		
M12 5-pin male receptacle, 1/2 inch NPT back threads, 3.2 ft (1 m) wiring leads. For use with Eaton SL4/SL7 Series Stacklights with post-mount bases. Also for connection of remote panel Contactors and other devices to On Machine I/O modules.	1	**SWD4-PRM5-1-S**
M12 5-pin female receptacle, 1/2 inch NPT back threads, 3.2 ft (1 m) wiring leads. For use where needed in remote panel wiring situations.	1	**SWD4-PRF5-1-S**
M12 5-pin male receptacle, M20 front threads, 5 inch wiring leads. For use with Eaton SL4/SL7 Series Stacklights with fast-mount bases. Also for use with Eaton M22 Series remote pushbutton enclosures.	1	**SWD4-PRM5-2-S**
M12 5-pin female receptacle, M20 front threads, 5 inch wiring leads. For use where needed in remote enclosure wiring situations.	1	**SWD4-PRF5-2-S**
I/O Device Cables Double-Ended		
6 in (0.1 m) length	1	**SWD4-M1LR5-1-2S**
1 ft (0.3 m) length	1	**SWD4-M3LR5-1-2S**
2 ft (0.6 m) length	1	**SWD4-M6LR5-1-2S**
3.2 ft (1 m) length	1	**SWD4-1LR5-1-2S**
6.5 ft (2 m) length	1	**SWD4-2LR5-1-2S**
I/O Device Cables Single-Ended		
1 ft (0.3 m) length	1	**SWD4-M3LR5-S**
2 ft (0.6 m) length	1	**SWD4-M6LR5-S**
3.2 ft (1 m) length	1	**SWD4-1LR5-S**
4.9 ft (1.5 m) length	1	**SWD4-1M5LR5-S**
6.5 ft (2 m) length	1	**SWD4-2LR5-S**
16.4 ft (5 m) length	1	**SWD4-5LR5-S**
Cord Grips		
Round cable cord grip, M20	1	**V-M20**
Round cable cord grip, 1/2 inch NPT	1	**V-12NPT**

Valve Connectors

For connections to Proportional and ON/OFF valves with EN 175301803 / DIN 43650, Industry Standard and M12 connections.

EU3E-SWD-X1H-1

Description	Pkg Qty.	Catalog Number
Proportional/ON/OFF Valve Connectors EN/DIN		
Proportional/ON/OFF Valve Connectors are designed for compact, electronic control of non-feedback hydraulic proportional and switching valves conforming to ISO 4400/DIN 43650. No separate T-Connector is required as the SmartWire-DT round bus cables found on **Page V7-T9-49** wire directly in and out of two M12 connection points.		
Interface: ISO 4400/DIN 43650 Type A (18 mm)	1	**EU3E-SWD-X1H-1**

SWD4-V_

Description	Valve Power Limit	Pkg Qty.	Catalog Number
ON/OFF Valve Connectors—EN/DIN/IS			
Connectors mount directly to valves and have single M12 connectors for wiring to T-Connectors. When used with standard "I/O Device Cables Double-Ended" listed on **Page V7-T9-46** to make the connection between T-Connectors and these valve connectors, these connectors will support up to 10 W hydraulic and pneumatic valves. When used with "Valve Device Cables Double-Ended" listed below, up to 30 W valves are supported.			
EN 175301803 / DIN 43650 Type A 18 mm (terminal spacing) ON/OFF valve	30 W	1	**SWD4-VA3-1-S**
EN 175301803 / DIN 43650 Type B 10 mm (terminal spacing) ON/OFF valve	30 W	1	**SWD4-VB3-1-S**
Industry standard mini/Form B 11 mm (terminal spacing) ON/OFF valve	30 W	1	**SWD4-VB3-2-S**
EN 175301803 / DIN 43650 Type C 8 mm (terminal spacing) ON/OFF valve	30 W	1	**SWD4-VC3-1-S**
Industry standard sub-micro/Form C 9.4 mm (terminal spacing) ON/OFF valve	30 W	1	**SWD4-VC3-2-S**

SWD4-2LR5-3-2S

Description	Pkg Qty.	Catalog Number
Valve Device Cables Double-Ended		
Connector cables with special wiring to allow higher-wattage valves to be used with standard T-Connectors. In these connectors, all three potential output channels from standard T-Connectors are wired to the valve terminals. Each output channel is nominally rated at 500 mA. If two or three output channels are used and are turned on simultaneously, the use of these special cable versions will connect those multiple outputs to the valve coil terminals. With two channels simultaneously energized, up to 20 W valves are supported. With three channels simultaneously energized, up to 30 W valves are supported.		
1 ft (0.3 m) length	1	**SWD4-M3LR5-3-2S**
2 ft (0.6 m) length	1	**SWD4-M6LR5-3-2S**
3.2 ft (1 m) length	1	**SWD4-1LR5-3-2S**
6.5 ft (2 m) length	1	**SWD4-2LR5-3-2S**

EU1S-SWD-PF1-2

Machine Mount Powerfeed Modules

Machine mount Powerfeed modules feed auxiliary 24 Vdc power into the On Machine SmartWire-DT round cable system. Supplemental 24 Vdc power is only needed if the total power consumption of devices connected to the On Machine SmartWire-DT system exceeds the available power from the main control cabinet connection. These modules can be connected at any location in the system, and there is no limit to the number of Powerfeed modules that can be connected in a system branch.

Description	Maximum Powerfeed Capacity	Pkg Qty.	Catalog Number
Provides connection point for external 24 Vdc power supply input.	4 A	1	**EU1S-SWD-PF1-2**

Powerfeed Cables

Powerfeed cables are used to connect from a source of 24 Vdc power to the power input connection on the EU1S-SWD-PF1-2 Powerfeed module.

	Voltage Style	Number of Pins	Gauge	Length	Pin Configuration/Wire Colors (Face View Female Shown)	PVC Jacket Catalog Number	PUR Jacket Catalog Number
CSDS4A4_	**Single-Ended Powerfeed Cable, Straight Female M12 Connection**						
	DC	4-pin, 4-wire	22 AWG	6.0 ft (2 m)	1-Brown 2-White 3-Blue 4-Black	**CSDS4A4CY2202**	**CSDS4A4RY2202**
				16.4 ft (5 m)		**CSDS4A4CY2205**	**CSDS4A4RY2205**
				32.8 ft (10 m)		**CSDS4A4CY2210**	**CSDS4A4RY2210**
				65.6 ft (20 m)		**CSDS4A4CY2220**	—
CSDR4A4_	**Single-Ended Powerfeed Cable, Right Angle Female M12 Connection**						
	DC	4-pin, 4-wire	22 AWG	6.0 ft (2 m)	1-Brown 2-White 3-Blue 4-Black	**CSDR4A4CY2202**	**CSDR4A4RY2202**
				16.4 ft (5 m)		**CSDR4A4CY2205**	**CSDR4A4RY2205**
				32.8 ft (10 m)		**CSDR4A4CY2210**	**CSDR4A4RY2210**
CSDS4A4_	**Double-Ended Powerfeed Cable, Straight M12 Connections** ①						
	DC	4-pin, 4-wire	22 AWG	3.0 ft (1 m)	Face View Female / Face View Male 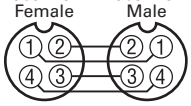	**CSDS4A4CY2201-D**	—
				5.0 ft (1.5 m)		**CSDS4A4CY2201.5-D**	—
				6.0 ft (2 m)		**CSDS4A4CY2202-D**	—
				10.0 ft (3 m)		**CSDS4A4CY2203-D**	—
				16.4 ft (5 m)		**CSDS4A4CY2205-D**	—

Panel Transition Components

	Description	Pkg Qty.	Catalog Number
SWD4-SFL8-12	**Flat-to-Round Cabinet Transition Adapter**		
	To transition between in-cabinet flat cabling and on machine round cabling. Wiring terminals allow external 24 Vdc power supply at this location if desired. Jumper these terminals to utilize 24 Vdc power from the incoming flat cable.	1	**SWD4-SFL8-12**
SWD4-SML8-12	**Round-to-Flat Cabinet Transition Adapter**		
	To transition between on machine round cabling and in-cabinet flat cabling. Wiring terminals allow external 24 Vdc power supply at this location if desired. Jumper these terminals to utilize 24 Vdc power from the incoming round cable.	1	**SWD4-SML8-12**
SWD4-SML5-12	**Cabinet Cable Pass-Through Adapter**		
	For passing the SmartWire-DT round cable connection easily through a panel or a cabinet wall.	1	**SWD4-SML5-12**

Note

① SmartWire-DT round bus cables shown on **Page V7-T9-49** have 22 AWG power conductors and can also be used as Powerfeed cables, offering additional length options.

Right Angle Adapter Cables

These adapters are typically used to create a lower profile at the panel transition wiring point.

	Voltage Style	Number of Pins	Gauge	Length	Pin Configuration/Wire Colors (Face View Female Shown)	PVC Jacket Catalog Number
SWD4-M1LR5-RS	**Right Angle**					
	DC	5-pin	22 AWG	6 in (0.1 m)	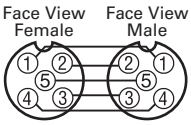	**SWD4-M1LR5-RS**
SWD4-M1LR5-SR	**Micro-Style Right Angle Female/Straight Male**					
	DC	5-pin	22 AWG	6 in (0.1 m)	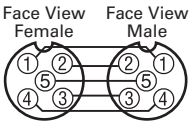	**SWD4-M1LR5-SR**

SmartWire-DT Round Bus Cables

These cables are used to connect between the panel transition wiring adapter and the Machine Mount I/O modules on the system.

	Description	Pkg Qty.	Catalog Number
SWD4-_	**Round Cable**		
	Each cable is 5-conductor, with one male DC M12 and one female DC M12 connector at each end.		
	6 in (0.1 m) length	1	**SWD4-M1LR5-2S**
	1 ft (0.3 m) length	1	**SWD4-M3LR5-2S**
	2 ft (0.6 m) length	1	**SWD4-M6LR5-2S**
	3.2 ft (1 m) length	1	**SWD4-1LR5-2S**
	4.9 ft (1.5 m) length	1	**SWD4-1M5LR5-2S**
	6.5 ft (2 m) length	1	**SWD4-2LR5-2S**
	9.8 ft (3 m) length	1	**SWD4-3LR5-2S**
	13.1 ft (4 m) length	1	**SWD4-4LR5-2S**
	16.4 ft (5 m) length	1	**SWD4-5LR5-2S**
	32.8 ft (10 m) length	1	**SWD4-10LR5-2S**
	65.6 ft (20 m) length	1	**SWD4-20LR5-2S**
SWD4-XXXLR5	**Bulk Cable and Field-Wireable Connectors for Non-Standard Cable Lengths**		
	Non-standard cable lengths can be easily constructed using the raw cable and field-installable connectors in this section.		
	Bulk cable (to build non-standard lengths)	Order in meters	**SWD4-XXXLR5**
SWD4-SF5-67	Female (to terminate raw cable)	1	**SWD4-SF5-67**
SWD4-SM5-67	Male (to terminate raw cable)	1	**SWD4-SM5-67**

Power Cables—Externally Powered I/O Models

To bring power to and pass power between externally powered EU6E and EU8E models starting on **Page V7-T9-43**.

	Current Rating at 600 V	Voltage Style	Number of Pins	Gauge	Length	Pin Configuration/Wire Colors (Face View Female Shown)	Catalog Number
Mini-Style Straight Female	**Mini-Style Straight Female**						
	10 A	AC/DC	4-pin, 4-wire	16 AWG	6.5 ft (2 m)	1-Brown 2-White 3-Blue 4-Black	**SWD4-2LR4P-S**
					13 ft (4 m)		**SWD4-4LR4P-S**
					19.5 ft (6 m)		**SWD4-6LR4P-S**
					32.5 ft (10 m)		**SWD4-10LR4P-S**
					65 ft (20 m)		**SWD4-20LR4P-S**
Mini-Style Right-Angle Female	**Mini-Style Right-Angle Female**						
	10 A	AC/DC	4-pin, 4-wire	16 AWG	6.5 ft (2 m)	1-Brown 2-White 3-Blue 4-Black	**SWD4-2LR4P-R**
					13 ft (4 m)		**SWD4-4LR4P-R**
					19.5 ft (6 m)		**SWD4-6LR4P-R**
					32.5 ft (10 m)		**SWD4-10LR4P-R**
					65 ft (20 m)		**SWD4-20LR4P-R**
Mini-Style Straight Female/Male	**Mini-Style Straight Female/Male**						
	10 A	AC/DC	4-pin, 4-wire	16 AWG	1 ft (0.3 m)	Face View Male / Face View Female 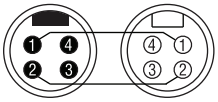	**SWD4-M3LR4P-2S**
					2 ft (0.6 m)		**SWD4-M6LR4P-2S**
					3.2 ft (1 m)		**SWD4-1LR4P-2S**
					4.9 ft (1.5 m)		**SWD4-1M5LR4P-2S**
					6.5 ft (2 m)		**SWD4-2LR4P-2S**
					10 ft (3 m)		**SWD4-3LR4P-2S**
					13 ft (4 m)		**SWD4-4LR4P-2S**
					16.4 ft (5 m)		**SWD4-5LR4P-2S**
					32.5 ft (10 m)		**SWD4-10LR4P-2S**
					65 ft (20 m)		**SWD4-20LR4P-2S**
Mini-Style Right-Angle Female/Male	**Mini-Style Right Angle Female/Male**						
	10 A	AC/DC	4-pin, 4-wire	16 AWG	1 ft (0.3 m)	Face View Male / Face View Female 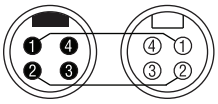	**SWD4-M3LR4P-2R**
					2 ft (0.6 m)		**SWD4-M6LR4P-2R**
					3.2 ft (1 m)		**SWD4-1LR4P-2R**
					4.9 ft (1.5 m)		**SWD4-1M5LR4P-2R**
					6.5 ft (2 m)		**SWD4-2LR4P-2R**
					10 ft (3 m)		**SWD4-3LR4P-2R**
					13 ft (4 m)		**SWD4-4LR4P-2R**
					16.4 ft (5 m)		**SWD4-5LR4P-2R**
					32.5 ft (10 m)		**SWD4-10LR4P-2R**
					65 ft (20 m)		**SWD4-20LR4P-2R**

Power Cables—Externally Powered I/O Models, continued

To bring power to and pass power between externally powered EU6E and EU8E models starting on **Page V7-T9-43**.

	Description	Pkg Qty.	Catalog Number
SWD4-XXXLR4P	**Bulk Cable and Field-Wireable Connectors for Non-Standard Cable Lengths**		
	Non-standard cable lengths can be easily constructed using the raw cable and field-installable connectors in this section.		
	Bulk cable (4-conductor, 16 AWG)	Order in meters	**SWD4-XXXLR4P**
SWD4-SF4P-67	Female straight (to terminate raw cable)	1	**SWD4-SF4P-67**
SWD4-SM4P-67	Male straight (to terminate raw cable)	1	**SWD4-SM4P-67**
	Female right angle (to terminate raw cable)	1	**SWD4-SF4P-67R**
	Male right angle (to terminate raw cable)	1	**SWD4-SM4P-67R**

Other Power Cabling Connections

To provide a panel transition for the 24 Vdc power feed to I/O modules with external power connection.

	Voltage Style	Number of Pins	Gauge	Length	Mounting Hole Size	Pin Configuration/Wire Colors (Face View Female Shown)	Catalog Number
	Panel Transition Adapter						
	To easily bring power for externally powered I/O modules through a panel wall.						
SWD4-PRF4P-1-S	AC/DC	4-pin, 4-wire	16 AWG	3.2 ft (1 m)	1/2-14 in NPT back threads	1-Brown 2-White 3-Blue 4-Black	**SWD4-PRF4P-1-S**

Other System Components

	Description	Pkg Qty.	Catalog Number
SWD4-RC5-10	**Bus Termination Module**		
	To terminate the end of an on machine SmartWire-DT round cable network branch	1	**SWD4-RC5-10**
	Connector Caps		
SWD4-ACAP-10	Active cap—allows for remote monitoring of the health of an unused device connection on a machine mount I/O module over the SmartWire-DT network	1	**SWD4-ACAP-10**
SWD4-PCAP-F	Passive cap—to provide physical protection and sealing if nothing is connected to the female M12 connector on a machine mount I/O module	1	**SWD4-PCAP-F**
SWD4-PCAP-M	Passive cap—to provide physical protection and sealing if nothing is connected to the male M12 connector on a machine mount I/O module	1	**SWD4-PCAP-M**
SWD4-PCAPP-F	Passive cap—to provide physical protection and sealing if nothing is connected to the female-mini (7/8 in) external power connection on a machine mount I/O module	1	**SWD4-PCAPP-F**
SWD4-PCAPP-M	Passive cap—to provide physical protection and sealing if nothing is connected to the male-mini (7/8 in) external power connection on a machine mount I/O module	1	**SWD4-PCAPP-M**
	Mounting Accessories		
SWD4-MNT-VER	Clip mount—for easy mounting of a machine mount I/O module to any flat or channeled surface, including cylinders and other mounting situations where T-channels are present. Once the bracket is mounted, the I/O Module can be removed and reinstalled without tools	1	**SWD4-MNT-VER**
SWD4-MNT-DIN	DIN rail mount—for easy mounting of an EU1E_ or EU2E_ machine mount I/O Module to DIN rail	2	**SWD4-MNT-DIN**
	Universal (Placeholder) Module		
EU1M-SWD-NOP	For use to hold a network address location for a node that may be installed at some time in the future	1	**EU1M-SWD-NOP**

Enclosed (IP67) Pilot Devices

Contents

Description	*Page*
Enclosed (IP67) Pilot Devices	
Enclosed M22 Pilot Device Examples	**V7-T9-54**
Enclosures	**V7-T9-54**
M12 Wiring Receptacles	**V7-T9-54**

Enclosed (IP67) Pilot Devices

Product Description

Many remote pilot devices of various types and from various manufacturers can be connected to a machine's control cabinet using the SmartWire-DT On Machine wiring system. This section describes a series of easy to assemble versions of a range of pilot devices from within Eaton's M22 standard catalog family to make this connection quick and easy. With simple assembly using standard catalog components, enclosed devices can easily be connected to the SmartWire-DT On Machine wiring system at any mounting location on the machine. This approach to remote device wiring can help the OEM eliminate wiring, terminal blocks and PLC input/output modules in the machine control cabinet.

Features

- Simple assembly with catalog components achieves IP67 sealing and offers plug & play connection to the SmartWire-DT network
- Base-mount contact blocks and LED modules allow for simple removal of the enclosure cover without disturbing switch wiring
- Simple connection via standard cable accessories to SmartWire-DT Machine Mount I/O modules
- Wide variety of enclosures, pushbuttons, selector switches, key switches, pilot lights, and other devices make solving a range of machine applications easy

Product Selection

M22 operators and indicating lights including momentary and maintained pushbuttons, pilot lights, hand and key operated selector switches, and palm switches.

Enclosed M22 Pilot Device Examples

Pushbutton

Double Pushbutton

Selector Switch

Key Selector Switch

Palm Switch

M22-I_

Enclosures

This is a representative subset of Eaton's line of sealed mounting enclosures for M22 devices. Receptacles in the next section require M20 enclosure knockouts, which are present in all M22 enclosures offered by Eaton but are most common in the enclosures listed in this section.

Description	Catalog Number
One-element enclosure	**M22-I1**
Two-element enclosure	**M22-I2**
Three-element enclosure	**M22-I3**
Four-element enclosure	**M22-I4**
Six-element enclosure	**M22-I6**

SWD4-PRM5-…

M12 Wiring Receptacles

Panel-mount M12 connector receptacles designed expressly for mounting in M20 enclosure knockouts in sealed M22 mounting enclosures listed in the previous section.

Description	Catalog Number
5-inch wiring leads, M20 front threads	**SWD4-PRM5-2-S**
1-meter wiring leads, M20 front threads	**SWD4-PRM5-1-S**

Assembly Instructions

1. Select pushbutton or pilot light operator and required contact blocks/light modules from catalog Volume 7 Tab 1.
2. Select enclosure from above listing.
3. Select receptacle from above listing.
4. Mount receptacle in enclosure knockout.
5. Wire receptacle to contact blocks and/or light modules as follows:
   a. To wire a pushbutton or other pilot device as an input to the SmartWire-DT system
      1) The receptacle brown lead is wired to one side of the switch contact
      2) The receptacle black, white or gray ① lead is wired to the other side of the switch contact
   b. To wire an indicating light or actuator as an output from the SmartWire-DT system
      1) The receptacle blue lead is wired to one side of the actuator or pilot light contact
      2) The receptacle black, white, or gray ① lead is wired to the other side of the actuator or pilot light contact

Note

① SmartWire-DT machine mount I/O modules (see **Page V7-T9-43**) are offered in versions with multiple input and output channels per M12 connection point. In the receptacle wiring scheme, one channel is available on the black wire, the second channel is available on the white wire, and a third channel (if available) is carried on the gray wire. If three channels on a single device connector are needed for a 3-element stacklight or 3-element pushbutton station, see EU2E-SWD-4DD-1 in the main T-connector model listing.

Remote Machine Mount Stacklights

Contents

Description	*Page*
Remote Machine Mount Stacklights	
Stacklight Mounting Modules—Fast Mounting System	**V7-T9-56**
Stacklight Mounting Modules—Post Mounting System	**V7-T9-57**

Remote Machine Mount Stacklights

Product Description

Stacklights located remotely on a machine can be easily connected to a machine's logic control using SmartWire-DT. This section describes how to easily add an M12 connector to the base of the SL4 and SL7 standard catalog stacklight families to make this SmartWire-DT connection quick and easy.

These assembled stacklights can then be directly connected to SmartWire-DT machine mount I/O modules. This plug & play connection scheme speeds machine assembly, installation and commissioning, and helps the OEM eliminate wiring, terminal blocks and PLC input/output modules in the control cabinet.

Features

- Simple wiring receptacle mounts directly to stacklight base units to provide IP67 sealing for stacklights remotely located on the machine
- Wiring receptacles are fully compatible with Eaton's rapid mount and aluminum tube bases
- A single cable connection operates up to 3 light or audible modules from the SL7 or SL4 families in any combination
- Simple connection with a single standard cable to SmartWire-DT Machine Mount I/O modules
- Plug & play wiring and auto-addressing means no special setup is required

Stacklight Mounting Modules—Fast Mounting System

Includes Cover, Maximum 3 Modules

SLx-FMS_

Description	Tube Length	Color	Standard Pack	For use with …	Catalog Number
Base with base adapter for rapid mount/dismount Screw terminals SL7 Series Stacklights	100 mm	Black with Aluminum-color tube	1	SL7-L-… SL7-BL-… SL7-FL-… SL7-AP-…	**SL7-FMS-100**
	250 mm				**SL7-FMS-250**
	400 mm				**SL7-FMS-400**
Base with base adapter for rapid mount/dismount Screw terminals SL4 Series Stacklights	100 mm	Black with Aluminum-color tube	1	SL4-L-… SL4-BL-… SL4-FL-… SL4-AP-…	**SL4-FMS-100**
	250 mm				**SL4-FMS-250**
	400 mm				**SL4-FMS-400**

9

M12 Wiring Receptacles

SWD4-PRM5-2-S

Description	Detail	Catalog Number
For wiring an SL7/SL4 Stacklight with a Fast Mount (FMS) base	M12 5-pin male receptacle, M20 front threads, 5-inch wiring leads	**SWD4-PRM5-2-S**

Assembly Instructions

1. Select Stacklight light modules from catalog Volume 7 Tab 2.
2. Select Stacklight mounting base from above listings.
3. Select receptacle appropriate for chosen Stacklight mounting base from above listing.
   If using the Post Mount base, also select a Stacklight Mounting Adapter from that section above.
4. Mount receptacle in Fast Mount base or Post Mount base adapter.
5. Wire receptacle to Stacklight terminals as follows:
   a. The receptacle blue lead is wired to Terminal #0 on the Stacklight
   b. The receptacle black, white or gray ① lead is wired to the numbered terminal for the light module in question

Note

① SmartWire-DT On Machine I/O modules (see **Page V7-T9-43**) are offered in versions with multiple input and output channels per M12 connection point. In the receptacle wiring scheme, one channel is available on the black wire, the second channel is available on the white wire, and a third channel (if available) is carried on the gray wire. If three channels on a single device connector are needed for a 3-element stacklight or 3-element pushbutton station, see EU2E-SWD-4DD-1 in the model listing on **Page V7-T9-43**.

Stacklight Mounting Modules—Post Mounting System

Includes Cover, Maximum 3 Modules

SLx-PIB/CB-T_

Description	Tube Length	Color	Standard Pack	For use with …	Catalog Number
Base with aluminum tube and 3/4 in NPT threaded base Spring-loaded terminals SL7 Series Stacklights	100 mm	Black with Aluminum-color tube	1	SL7-L-… SL7-BL-… SL7-FL-… SL7-AP-…	**SL7-CB-T-100**
	250 mm				**SL7-CB-T-250**
	400 mm				**SL7-CB-T-400**
Base with aluminum tube and 3/4 in NPT threaded base Spring-loaded terminals SL4 Series Stacklights	100 mm	Black with Aluminum-color tube	1	SL4-L-… SL4-BL-… SL4-FL-… SL4-AP-…	**SL4-PIB-T-100**
	250 mm				**SL4-PIB-T-250**
	400 mm				**SL4-PIB-T-400**

Stacklight Mounting Adapter

SL7/4-FW-T

Description	Detail	Catalog Number
Mounting adapter to allow wiring receptacle to mount to stacklight post mount base	Mounting adapter kit	**SL7/4-FW-T**

M12 Wiring Receptacles

SWD4-PRM5-1-S

Description	Detail	Catalog Number
For wiring an SL7/SL4 Stacklight with post-mount base	M12 5-pin male receptacle, 1/2 inch NPT back threads, 1-meter leads	**SWD4-PRM5-1-S**

Assembly Instructions

1. Select Stacklight light modules from catalog Volume 7 Tab 2.
2. Select Stacklight mounting base from above listings.
3. Select receptacle appropriate for chosen Stacklight mounting base from above listing.
   If using the Post Mount base, also select a Stacklight Mounting Adapter from that section above.
4. Mount receptacle in Fast Mount base or Post Mount base adapter.
5. Wire receptacle to Stacklight terminals as follows:
   a. The receptacle blue lead is wired to Terminal #0 on the Stacklight
   b. The receptacle black, white or gray ① lead is wired to the numbered terminal for the light module in question

Note

① SmartWire-DT On Machine I/O modules (see **Page V7-T9-43**) are offered in versions with multiple input and output channels per M12 connection point. In the receptacle wiring scheme, one channel is available on the black wire, the second channel is available on the white wire, and a third channel (if available) is carried on the gray wire. If three channels on a single device connector are needed for a 3-element stacklight or 3-element pushbutton station, see EU2E-SWD-4DD-1 in the model listing on **Page V7-T9-43**.

Technical Data and Specifications

Gateway Modules

Description	Unit	EU5C-SWD-EIP-MODTCP Gateway	EU5C-SWD-PROFINET Gateway	EU5C-SWD-DP Gateway	EU5C-SWD-ETHERCAT Gateway	EU5C-SWD-CAN Gateway	EU5C-SWD-POWERLINK Gateway	EU5C-SWD-SERCOS Gateway
General								
Standards		IEC/EN 61131-2 EN 50178	IEC/EN 61131-2 EN 50178	IEC/EN 61131-2 EN 50178	IEC/EN 61131-2 EN 50178	IEC/EN 61131-2 EN 50178	IEC/EN 61131-2 EN 50178	IEC/EN 61131-2 EN 50178
Dimensions (W x H x D)	in (mm)	1.38 x 3.54 x 4.88 (35 x 90 x 124)	1.38 x 3.54 x 4.88 (35 x 90 x 124)	1.38 x 3.54 x 5.0 (35 x 90 x 127)	1.38 x 3.54 x 5.0 (35 x 90 x 127)	1.38 x 3.54 x 5.0 (35 x 90 x 127)	1.38 x 3.54 x 5.0 (35 x 90 x 127)	1.38 x 3.54 x 5.0 (35 x 90 x 127)
Weight	lbs (kg)	0.37 (0.17)	0.37 (0.17)	0.35 (0.16)	0.35 (0.16)	0.35 (0.16)	0.35 (0.16)	0.35 (0.16)
Mounting		DIN rail IEC/EN 60715, 35 mm		DIN rail IEC/EN 60715, 35 mm		DIN rail IEC/EN 60715, 35 mm		
Mounting position		Vertical	Vertical	Vertical	Vertical	Vertical	Vertical	Vertical
Ambient Conditions, Mechanical								
Degree of protection (IEC/EN 60529)		IP20	IP20	IP20	IP20	IP20	IP20	IP20
Vibrations (IEC/EN 61131-2:2008)								
Constant amplitude 3.5 mm	Hz	5–8.4	5–8.4	5–8.4	5–8.4	5–8.4	5–8.4	5–8.4
Constant acceleration 1 g	Hz	8.4–150	8.4–150	8.4–150	8.4–150	8.4–150	8.4–150	8.4–150
Mechanical shock resistance (IEC/EN 60068-2-27) semi-sinusoidal 15 g/11 ms	Impacts	9	9	9	9	9	9	9
Drop to IEC/EN 60068-2-31 (drop height)	in (mm)	1.97 (50)	1.97 (50)	1.97 (50)	1.97 (50)	1.97 (50)	1.97 (50)	1.97 (50)
Free fall, packaged (IEC/EN 60068-2-32)	ft (m)	1.0 (0.3)	1.0 (0.3)	1.0 (0.3)	1.0 (0.3)	1.0 (0.3)	1.0 (0.3)	1.0 (0.3)
Electromagnetic Compatibility (EMC)								
Overvoltage category		II	II	II	II	II	II	II
Pollution degree		2	2	2	2	2	2	2
Electrostatic discharge (IEC/EN 61131-2:2008)								
Air discharge (Level 3)	kV	8	8	8	8	8	8	8
Contact discharge (Level 2)	kV	4	4	4	4	4	4	4
Electromagnetic fields (IEC/EN 61131-2:2008)								
80–1000 MHz	V/m	10	10	10	10	10	10	10
1.4–2 GHz	V/m	3	3	3	3	3	3	3
2–2.7 GHz	V/m	1	1	1	1	1	1	1
Radio interference suppression (SmartWire-DT)		EN 55011 Class A		EN 55011 Class A		EN 55011 Class A		
Burst (IEC/EN 61131-2:2008, Level 3)								
Supply cables	kV	2	2	2	2	2	2	2
CAN/DP bus cable	kV	1	1	1	1	1	1	1
SmartWire-DT cables	kV	1	1	1	1	1	1	1
Surge (IEC/EN 61131-2:2008, Level 1)								
Supply cables	kV	0.5	0.5	0.5	0.5	0.5	0.5	0.5
CAN/DP bus cable	kV	1	1	1	1	1	1	1
Radiated RFI (IEC/EN 61131-2:2008, Level 3)	V	10	10	10	10	10	10	10
Climatic Environmental Conditions								
Operating ambient temperature (IEC 60068-2)	°F (°C)	–13° to 131° (–25° to 55°)		–13° to 131° (–25° to 55°)		–13° to 131° (–25° to 55°)		
Condensation		Prevent with suitable measures		Prevent with suitable measures		Prevent with suitable measures		
Storage	°F (°C)	–40° to 158° (–40° to 70°)		–40° to 158° (–40° to 70°)		–40° to 158° (–40° to 70°)		
Relative humidity, noncondensing (IEC/EN 60068-2-30)	%	5–95	5–95	5–95	5–95	5–95	5–95	5–95
Supply Voltage U_{Aux}								
SM Puffer Bremer	V	24 Vdc (–15%/+20%)		24 Vdc (–15%/+20%)		24 Vdc (–15%/+20%)		
Residual ripple on the input voltage	%	≤5	≤5	5	5	5	5	5
Protection against polarity reversal		Yes	Yes	Yes	Yes	Yes	Yes	Yes
Max. current (I_{max})	A	2 ①	2 ①	2 ①	2 ①	2 ①	2 ①	2 ①
Short-circuit rating		No, external fuse FAZ Z3		No, external fuse FAZ Z3		No, external fuse FAZ Z3		
Power loss	W	Normally 1	Normally 1	Normally 1	Normally 1	Normally 1	Normally 1	Normally 1
Potential isolation		No	No	No	No	No	No	No
Rated operating voltage of 24 Vdc modes	V	Typ. U_{Aux} –0.2	Typ. U_{Aux} –0.2	Typ. U_{Aux} –0.2	Typ. U_{Aux} –0.2	Typ. U_{Aux} –0.2	Typ. U_{Aux} –0.2	Typ. U_{Aux} –0.2

Note

① If contactors with a total current consumption >2 A are connected, a Powerfeed module EU5C-SWD-PF1/2 has to be used.

Gateway Modules, continued

Description	Unit	EU5C-SWD-EIP-MODTCP Gateway	EU5C-SWD-PROFINET Gateway	EU5C-SWD-DP Gateway	EU5C-SWD-ETHERCAT Gateway	EU5C-SWD-CAN Gateway	EU5C-SWD-POWERLINK Gateway	EU5C-SWD-SERCOS Gateway
Supply Voltage U_{Pow}								
Supply voltage	V	24 Vdc (–15%/+20%)						
Input voltage ripple	%	≤5	≤5	≤5	≤5	≤5	≤5	≤5
Siemens MPI, (optional)		Yes	Yes	Yes	Yes	Yes	Yes	Yes
Rated current (*I*)	A	0.7	0.7	0.7	0.7	0.7	0.7	0.7
Overload proof		Yes	Yes	Yes	Yes	Yes	Yes	Yes
Inrush current and duration	A	12.5 A/6 ms	12.5 A/6 ms	12.5 A/6 ms	12.5 A/6 ms	12.5 A/6 ms	12.5 A/6 ms	12.5 A/6 ms
Heat dissipation at 24 Vdc	W	3.8	3.8	3.8	3.8	3.8	3.8	3.8
Potential isolation between U_{Pow} and 15 V SmartWire-DT supply voltage		No	No	No	No	No	No	No
Bridging voltage dips	ms	10	10	10	10	10	10	10
Repetition rate	s	1	1	1	1	1	1	1
Status indication (LED)		Yes	Yes	Yes	Yes	Yes	Yes	Yes
SmartWire-DT Supply Voltage								
Rated operating voltage (U_e)	V	14.5 ±3%	14.5 ±3%	14.5 ±3%	14.5 ±3%	14.5 ±3%	14.5 ±3%	14.5 ±3%
Max. current (I_{max})	A	0.7 ①	0.7 ①	0.7 ①	0.7 ①	0.7 ①	0.7 ①	0.7 ①
Short-circuit proof		Yes	Yes	Yes	Yes	Yes	Yes	Yes
Connection Supply Voltages								
Connection type		Push in terminals	Push in terminals	Push in terminals	Push in terminals	Push in terminals	Push in terminals	Push in terminals
Solid	mm^2	0.2–1.5 (AWG 24–16)	0.2–1.5 (AWG 24–16)	0.2–1.5 (AWG 24–16)	0.2–1.5 (AWG 24–16)	0.2–1.5 (AWG 24–16)	0.2–1.5 (AWG 24–16)	0.2–1.5 (AWG 24–16)
Flexible with ferrule	mm^2	0.25–1.5	0.25–1.5	0.25–1.5	0.25–1.5	0.25–1.5	0.25–1.5	0.25–1.5
SmartWire-DT Network								
Station type		SmartWire-DT master	SmartWire-DT master	SmartWire-DT master	SmartWire-DT master	SmartWire-DT master	SmartWire-DT master	SmartWire-DT master
Number of SmartWire-DT nodes		99	99	58	99	99	99	99 ②
Baud rates 125k, 500k, 2M 250k, 1M		 125k 250k	 125k 250k	 125k 250k	 125k 250k	 125k 250k	 125k 250k	 125k 250k
Address allocation		Automatic	Automatic	Automatic	Automatic	Automatic	Automatic	Automatic
Status indication (LED)								
SmartWire-DT master		Green	Green	Green	Green	Green	Green	Green
Configurations		Red	Red	Red	Red	Red	Red	Red
Connections		Plug, 8-pole	Plug, 8-pole	Plug, 8-pole	Plug, 8-pole	Plug, 8-pole	Plug, 8-pole	Plug, 8-pole
Plug connectors		Flat plug SWD4-8MF2	Flat plug SWD4-8MF2	Flat plug SWD4-8MF2	Flat plug SWD4-8MF2	Flat plug SWD4-8MF2	Flat plug SWD4-8MF2	Flat plug SWD4-8MF2
Fieldbus Interface								
Bus protocol		Ethernet IP/Modbus TCP	PROFINET	PROFIBUS DP	EtherCAT	CANopen	POWERLINK	SERCOS
Baud rates		10/100 MB	10/100 MB	Up to 12 MB	Up to 12 MB	To 1 MB	To 1 MB	100 MB
Address allocation		Automatic	Automatic	Automatic	Automatic	Automatic	Automatic	Automatic
Station address		—	—	2–125	2–125	2–32	2–32	2–32
Address allocation		DIP switch/DHCP/BOOTP selection via DIP switch		DIP switch	DIP switch	DIP switch	DIP switch	DIP switch
Status display fieldbus interface (LED)		Link status: yellow (10 MB), green (100 MB) flashing				Two-colored red/green		
Terminating resistor		—	—	Switchable via plug	Switchable via plug	DIP switches	DIP switches	DIP switches
Connection design for field bus		2 x RJ45 (2-channel switch)	2 x RJ45 (2-channel switch)	1 x SUB-D socket, 9-pole	2 x RJ45, (2-channel switch)	1 x SUB-D socket, 9-pole	2 x RJ45, (2-channel switch)	2 x RJ45, (2-channel switch)
Potential isolation		Yes	Yes	Yes	Yes	Yes	Yes	Yes

Notes

① If contactors with a total current consumption >0.7 A are connected, a Power Feeder module EU5C-SWD-PF2 has to be used.

② Depends on SERCOS master capability.

Powerfeed Modules

Description	Unit	EU5C-SWD-PF1-1 Powerfeed	EU5C-SWD-PF2-1 Powerfeed
General			
Standards		IEC/EN 61131-2 EN 50178	IEC/EN 61131-2 EN 50178
Dimensions (W x H x D)	in (mm)	1.38 x 3.54 x 4.88 (35 x 90 x 124)	1.38 x 3.54 x 4.88 (35 x 90 x 124)
Weight	lbs (kg)	0.24 (0.11)	0.37 (0.17)
Mounting		DIN rail IEC/EN 60715, 35 mm	DIN rail IEC/EN 60715, 35 mm
Mounting position		Vertical	Vertical
Ambient Conditions, Mechanical			
Degree of protection (IEC/EN 60529)		IP20	IP20
Vibrations (IEC/EN 61131-2:2008)			
Constant amplitude 3.5 mm	Hz	5–8.4	5–8.4
Constant acceleration 1 g	Hz	8.4–150	8.4–150
Mechanical shock resistance (IEC/EN 60068-2-27) semi-sinusoidal 15 g/11 ms	Impacts	9	9
Drop to IEC/EN 60068-2-31 (drop height)	in (mm)	1.97 (50)	1.97 (50)
Free fall, packaged (IEC/EN 60068-2-32)	ft (m)	1.0 (0.3)	1.0 (0.3)
Electromagnetic Compatibility (EMC)			
Overvoltage category		II	II
Pollution degree		2	2
Electrostatic discharge (IEC/EN 61131-2:2008)			
Air discharge (Level 3)	kV	8	8
Contact discharge (Level 2)	kV	4	4
Electromagnetic fields (IEC/EN 61131-2:2008)			
80–1000 MHz	V/m	10	10
1.4–2 GHz	V/m	3	3
2–2.7 GHz	V/m	1	1
Radio interference suppression (SmartWire-DT)		EN 55011 Class A	EN 55011 Class A
Burst (IEC/EN 61131-2:2008, Level 3)			
Supply cables	kV	2	2
CAN/DP bus cable	kV	—	—
SmartWire-DT cables	kV	1	1
Surge (IEC/EN 61131-2:2008, Level 1)			
Supply cables	kV	0.5	0.5
CAN/DP bus cable	kV	1	1
Radiated RFI (IEC/EN 61131-2:2008, Level 3)	V	10	10
Climatic Environmental Conditions			
Operating ambient temperature (IEC 60068-2)	°F (°C)	–13° to 131° (–25° to 55°)	–13° to 131° (–25° to 55°)
Condensation		Prevent with suitable measures	Prevent with suitable measures
Storage	°F (°C)	–40° to 158° (–40° to 70°)	–40° to 158° (–40° to 70°)
Relative humidity, noncondensing (IEC/EN 60068-2-30)	%	5–95	5–95
Supply Voltage U_{Aux}			
SM Puffer Bremer	V	24 Vdc (–15%/+20%)	24 Vdc (–15%/+20%)
Residual ripple on the input voltage	%	5	5
Protection against polarity reversal		Yes	Yes
Max. current (I_{max})	A	3	3
Short-circuit rating		No, external fuse FAZ Z3	No, external fuse FAZ Z3
Power loss	W	Normally 1	Normally 1
Potential isolation		No	No
Rated operating voltage of 24 Vdc modes	V	Typ. U_{Aux} –0.2	Typ. U_{Aux} –0.2

Powerfeed Modules, continued

Description	Unit	EU5C-SWD-PF1-1 Powerfeed	EU5C-SWD-PF2-1 Powerfeed
Supply Voltage U_{Pow}			
Supply voltage	V	24 Vdc (–15%/+20%)	24 Vdc (–15%/+20%)
Input voltage ripple	%	≤5	≤5
Siemens MPI, (optional)		—	Yes
Rated current (*I*)	A	0.7	0.7
Overload proof		Yes	Yes
Inrush current and duration	A	12.5 A/6 ms	12.5 A/6 ms
Heat dissipation at 24 Vdc	W	3.8	3.8
Potential isolation between U_{Pow} and 15 V SmartWire-DT supply voltage		—	Yes
Bridging voltage dips	ms	—	10
Repetition rate	s	—	1
Status indication (LED)		No	Yes
SmartWire-DT Supply Voltage			
Rated operating voltage (U_e)	V	14.5 ±3%	14.5 ±3%
Max. current (I_{max})	A	0.7	0.7
Short-circuit proof		No	Yes
Connection Supply Voltages			
Connection type		Push in terminals	Push in terminals
Solid	mm^2	0.2–1.5 (AWG 24–16)	0.2–1.5 (AWG 24–16)
Flexible with ferrule	mm^2	0.25–1.5	0.25–1.5
SmartWire-DT Network			
Station type		—	—
Number of SmartWire-DT modes		—	—
Baud rates		—	—
Address allocation		None	None
Status indication (LED)			
SmartWire-DT master		Green	Green
Configurations		Red	Red
Connections		2 x plug, 8-pole	2 x plug, 8-pole
Plug connectors		Two flat plugs SWD4-8MF2	Two flat plugs SWD4-8MF2
Fieldbus Interface			
Bus protocol		—	—
Baud rates		—	—
Address allocation		—	—
Station address		—	—
Address allocation		—	—
Status display fieldbus interface (LED)		—	—
Terminating resistor		—	—
Connection design for field bus		—	—
Potential isolation		—	—

XV-102 Series HMI-PLCs and XC-152 Series PLCs

Model	XV-102			XC-152		
Screen Size	**3.5 in**	**5.7 in**	**7.0 in**	**5.7 in**	**8.4 in**	**10.4 in**
Operating system	WinCE 5.0 Professional	WinCE 5.0 Professional	WinCE 5.0 Professional	WinCE 5.0 Professional	WinCE 5.0 Professional	WinCE 5.0 Professional
Touchscreen technology	Resistive	Resistive	Resistive	Resistive	Resistive	Resistive
Display, colors	Color TFT, 64 k colors	Color TFT, 64 k colors	Color TFT, 64 k colors	Color TFT, 64 k colors	Color TFT, 64 k colors	Color TFT, 64 k colors
Pixel resolution (landscape) portrait mode also available	QVGA 320 x 240	VGA 640 x 480	WVGA 800 x 480	VGA 640 x 480	VGA 640 x 480	VGA 640 x 480
Brightness (cd/m^2)	250	250	250	350	350	350
Backlight	LED, selectable dimming	LED, selectable dimming	LED, selectable dimming	LED, selectable dimming	LED, selectable dimming	LED, selectable dimming
Lifespan of backlight (half-life)	40,000 hrs	40,000 hrs	40,000 hrs	40,000 hrs	40,000 hrs	40,000 hrs
Processor	32 bit RISC, 400 MHz	32 bit RISC, 400 MHz	32 bit RISC, 400 MHz	32 bit RISC, 400 MHz	32 bit RISC, 400 MHz	32 bit RISC, 400 MHz
Volatile memory	64 MB DRAM	64 MB DRAM	64 MB DRAM	64 MB DRAM	64 MB DRAM	64 MB DRAM
Non-volatile memory	125 KB NVRAM/64 MB NAND, 1 SD card slot	125 KB NVRAM/64 MB NAND/ 2 MB NOR, 1 SD card slot		125 KB NVRAM/64 MB NAND/ 2 MB NOR, 1 SD card slot		
Real time clock	Yes	Yes	Yes	Yes	Yes	Yes
Communication ports	Ethernet 10/100, RS-485 or RS-232 USB Device	Ethernet 10/100, RS-485, RS-232 USB Host, USB Device		Ethernet 10/100, RS-485, RS-232 USB Host, USB Device		
Slots for COMM modules	None	None	None	None	None	None
Power supply rated voltage	24 Vdc nominal (–20%/+25%) with polarity protection			24 Vdc nominal (–20%/+25%) with polarity protection		
Continuous current consumption (max. amps)	0.2	0.4	0.4	0.4	0.6	0.6
Starting current inrush (A^{2}s)	1.5	1.5	1.5	1.5	1.5	1.5
Ambient conditions						
Operation—relative humidity, noncondensing	0 to 50 °C, 10 to 95%	0 to 50 °C, 10 to 95%	0 to 50 °C, 10 to 95%	0 to 50 °C, 10 to 95%	0 to 50 °C, 10 to 95%	0 to 50 °C, 10 to 95%
Storage/transport—relative humidity, noncondensing	–20 to 60 °C, 10 to 95%	–20 to 60 °C, 10 to 95%	–20 to 60 °C, 10 to 95%	–20 to 60 °C, 10 to 95%	–20 to 60 °C, 10 to 95%	–20 to 60 °C, 10 to 95%
Shock	IEC 60068-2-27 15 g for 11 ms duration			IEC 60068-2-27 15 g for 11 ms duration		
Vibration	IEC 60068-2-6 5–9 Hz: 3.5 mm displacement 9–60 Hz: 0.15 mm displacement 60–150 Hz: 2 g acceleration			IEC 60068-2-6 5–9 Hz: 3.5 mm displacement 9–60 Hz: 0.15 mm displacement 60–150 Hz: 2 g acceleration		
Agency certifications and standards	CE, UL/cUL, CSA (pending), RoHS			CE, UL/cUL, CSA (pending), RoHS		
Protection type						
Front	IP65, NEMA 4X (indoor)	IP65, NEMA 4X (indoor)	IP65, NEMA 4X (indoor)	IP65, NEMA 4X (indoor)	IP65, NEMA 4X (indoor)	IP65, NEMA 4X (indoor)
Rear	IP20, NEMA 1	IP20, NEMA 1	IP20, NEMA 1	IP20, NEMA 1	IP20, NEMA 1	IP20, NEMA 1
Housing material	Plastic	Plastic	Plastic	Metal	Metal	Metal
Dimensions WxHxD (mm)	136 x 100 x 30	170 x 130 x 39	210 x 135 x 38	212 x 156 x 53	275 x 208 x 53	345 x 260 x 54
Mounting cutout WxH (mm)	123 x 87	157 x 117	197 x 122	198 x 142	261 x 194	329 x 238
Approximate weight lbs (kg)	0.7 (0.3)	1.3 (0.6)	1.3 (0.6)	2.9 (1.3)	4.3 (2.1)	6.1 (3.0)
Ability to run third party software	No	No	No	No	No	No
XSoft-CoDeSys-2 development software		SW-XSOFT-CODESYS-2-S SW-XSOFT-CODESYS-2-M			SW-XSOFT-CODESYS-2-S SW-XSOFT-CODESYS-2-M	
XSoft-CoDeSys-3 development software		SW-XSOFT-CODESYS-3-S SW-XSOFT-CODESYS-3-M			SW-XSOFT-CODESYS-3-S SW-XSOFT-CODESYS-3-M	

Digital I/O Modules

Description	Unit	EU5E-SWD-8DX	EU5E-SWD-4DX	EU5E-SWD-4D4D	EU5E-SWD-4D2R	EU5E-SWD-X8D
General						
Standards		IEC/EN 61131-2; EN 50178	IEC/EN 61131-2; EN 50178	IEC/EN 61131-2; EN 50178	IEC/EN 61131-2; EN 50178	IEC/EN 61131-2; EN 50178
Dimensions (W x H x D)	in (mm)	1.38 x 3.54 x 3.97 (35 x 90 x 101)	1.38 x 3.54 x 3.97 (35 x 90 x 101)	1.38 x 3.54 x 3.97 (35 x 90 x 101)	1.38 x 3.54 x 3.97 (35 x 90 x 101)	1.38 x 3.54 x 3.97 (35 x 90 x 101)
Weight	lbs (kg)	0.22 (0.10)	0.22 (0.10)	0.22 (0.10)	0.22 (0.10)	0.22 (0.10)
Mounting		DIN rail IEC/EN 60715, 35 mm	Top-hat rail IEC/ EN 60715, 35 mm	DIN rail IEC/EN 60715, 35 mm	DIN rail IEC/EN 60715, 35 mm	Top-hat rail IEC/ EN 60715, 35 mm
Mounting position		Vertical	Vertical	Vertical	Vertical	Vertical
Ambient Conditions, Mechanical						
Degree of protection (IEC/EN 60529)		IP20	IP20	IP20	IP20	IP20
Vibrations (IEC/EN 61131-2:2008)						
Constant amplitude 3.5 mm	Hz	5–8.4	5–8.4	5–8.4	5–8.4	5–8.4
Constant acceleration 1 g	Hz	8.4–150	8.4–150	8.4–150	8.4–150	8.4–150
Mechanical shock resistance (IEC/EN 60068-2-27) semi-sinusoidal 15 g/11 ms	Impacts	9	9	9	9	9
Drop to IEC/EN 60068-2-31 (drop height)	in (mm)	1.97 (50)	1.97 (50)	1.97 (50)	1.97 (50)	1.97 (50)
Free fall, packaged (IEC/EN 60068-2-32)	ft (m)	1.0 (0.3)	1.0 (0.3)	1.0 (0.3)	1.0 (0.3)	1.0 (0.3)
Electromagnetic Compatibility (EMC)						
Overvoltage category		II	II	II	II	II
Pollution degree		2	2	2	2	2
Electrostatic discharge (IEC/EN 61131-2:2008)						
Air discharge (Level 3)	kV	8	8	8	8	8
Contact discharge (Level 2)	kV	4	4	4	4	4
Electromagnetic fields (IEC/EN 61131-2:2008)						
80–1000 MHz	V/m	10	10	10	10	10
1.4–2 GHz	V/m	3	3	3	3	3
2–2.7 GHz	V/m	1	1	1	1	1
Radio interference suppression (SmartWire-DT)		EN 55011 Class A	EN 55011 Class A	EN 55011 Class A	EN 55011 Class A	EN 55011 Class A
Burst (IEC/EN 61131-2:2008, Level 3)						
Supply cables	kV	2	2	2	2	2
Signal lines	kV	1	1	1	1	1
SmartWire-DT cables	kV	1	1	1	1	1
Surge (IEC/EN 61131-2:2008, Level 1)						
Supply cables	kV	0.5	0.5	0.5	0.5	0.5
Radiated RFI (IEC/EN 61131-2:2008, Level 3)	V	10	10	10	10	10
Climatic Environmental Conditions						
Operating ambient temperature (IEC 60068-2)	°F (°C)	–13° to 131° (–25° to 55°)	–13° to 131° (–25° to 55°)	–13° to 131° (–25° to 55°)	–13° to 131° (–25° to 55°)	–13° to 131° (–25° to 55°)
Condensation		Prevent with suitable measures	Prevent with suitable measures	Prevent with suitable measures	Prevent with suitable measures	Prevent with suitable measures
Storage	°F (°C)	–40° to 158° (–40° to 70°)	–40° to 158° (–40° to 70°)	–40° to 158° (–40° to 70°)	–40° to 158° (–40° to 70°)	–40° to 158° (–40° to 70°)
Relative humidity, noncondensing (IEC/ EN 60068-2-30)	%	5–95	5–95	5–95	5–95	5–95
SmartWire-DT Network						
Station type		SmartWire-DT (node)	SmartWire-DT (node)	SmartWire-DT (node)	SmartWire-DT (node)	SmartWire-DT (node)
Address allocation		Automatic	Automatic	Automatic	Automatic	Automatic
SmartWire-DT status (LED)		Green	Green	Green	Green	Green
Connection						
Plug		8-pole	Plug, 8-pole	8-pole	8-pole	Plug, 8-pole
Connection plug		External device plug SWD4-8SF2-5	External device plug SWD4-8SF2-5	External device plug SWD4-8SF2-5	External device plug SWD4-8SF2-5	External device plug SWD4-8SF2-5
Current consumption (15 V SWD supply)		16 mA	33 mA	33 mA	45 mA	43 mA

Digital I/O Modules, continued

Description	Unit	EU5E-SWD-8DX	EU5E-SWD-4DX	EU5E-SWD-4D4D	EU5E-SWD-4D2R	EU5E-SWD-X8D
Connection Supply and I/O						
Connection type		Push in terminals	Push in terminals	Push in terminals	Push in terminals	Push in terminals
Solid	mm^2	0.2–1.5 (AWG 24–16)	0.2–1.5 (AWG 24–16)	0.2–1.5 (AWG 24–16)	0.2–1.5 (AWG 24–16)	0.2–1.5 (AWG 24–16)
Flexible with ferrule ①	mm^2	0.25–1.5 (AWG 24–16)	0.25–1.5	0.25–1.5	0.25–1.5	0.25–1.5 (AWG 24–16)
24 Vdc Supply for Output Supply						
Rated operational voltage (U_e)	V	24 Vdc (–15%/+20%)	24 Vdc (–15%/+20%)	24 Vdc (–15%/+20%)	24 Vdc (–15%/+20%)	24 Vdc (–15%/+20%)
Residual ripple on the input voltage	%	—	≤5	5	—	≤5
Protection against polarity reversal		—	Yes	Yes	—	Yes
Digital Inputs						
Quantity		8	4 ①	4	4	—
Input current	mA	Typ. 4 at 24 Vdc	Typ. 4 at 24 Vdc	Typ. 4 at 24 Vdc	Typ. 4 at 24 Vdc	Typ. 4 at 24 Vdc
Voltage level to IEC/EN 61131-2						
Limit value type 1				Low <5 Vdc; High >15 Vdc		
Input delay						
High		<0.2 ms	<0.2 ms	<0.2 ms	<0.2 ms	<0.2 ms
Low		<0.2 ms	<0.2 ms	<0.2 ms	<0.2 ms	<0.2 ms
SmartWire-DT status (LED)		Yellow	Yellow	Yellow	Yellow	—
Power Supply I+, I-						
Overload proof		—	Yes, with diagnostics	—	—	—
Output current per input supply	A	—	≤0.5	—	—	—
Supply voltage	V	—	U_e 0.16 V	—	—	—
Transistor Outputs						
Number		—	—	4	—	8
Output current	A	—	—	Normally 0.5 at 24 Vdc	—	Normally 0.5 at 24 Vdc
Short-circuit tripping current	A	—	—	Max. 1.2 over 3 ms	—	Max. 1.2 over 3 ms
Lamp load (R_{LL})	W	—	—	3	—	≤3
Overload proof		—	—	Yes, with diagnostics	—	Yes, with diagnostics
Switching capacity		—	—	EN 60947-5-1 utilization category DC-13	—	EN 60947-5-1 utilization category DC-13
Status display	LED	—	—	—	—	Yellow
Relay Outputs						
Number		—	—	—	2	—
Contact type art		—	—	—	N/O contact	—
Operations						
Utilization category AC-1, 250 V, 6 A		—	—		$>6 \times 10^4$	—
Utilization category AC-15, 250 V, 3 A		—	—	—	$>5 \times 10^4$	—
Utilization category DC-13, 24 V, 1 A		—	—	—	$>2 \times 10^5$	—
Safe isolation	Vac	—	—	—	230	—
Minimum load current	mA	—	—	—	100 mA, 12 Vdc	—
Pick-up/drop-out time	ms	—	—	—	5/2.5	—
Bounce duration	ms	—	—	—	Normally 1.5	—
Short-circuit protection		—	—	—	External 4A gL/gG	—
Status display outputs (LED)		—	—	Yellow	Yellow	—
Potential Isolation						
Inputs for SmartWire-DT		Yes	Yes	Yes	Yes	Yes
Transistor outputs for SmartWire-DT		—	Yes	Yes	—	—
Transistor outputs for inputs		—	—	No	—	—
Relays for SmartWire-DT		—	—	—	Yes	—
Relays for inputs		—	—	—	Yes	—
Relays for relays		—	—	—	Yes	—

Note

① Three-wire connection with power supply I+, I-.

Analog I/O Modules

Description	Unit	EU5E-SWD-4AX	EU5E-SWD-2A2A	EU5E-SWD-4PT	EU5E-SWD-4PT-2
General					
Standards		IEC/EN 61131-2/EN 50178	IEC/EN 61131-2/EN 50178	IEC/EN 61131-2/EN 50178	IEC/EN 61131-2/EN 50178
Dimensions (W x H x D)	in (mm)	1.38 x 3.54 x 3.97 (35 x 90 x 101)	1.38 x 3.54 x 3.97 (35 x 90 x 101)	1.38 x 3.54 x 3.97 (35 x 90 x 101)	1.38 x 3.54 x 3.97 (35 x 90 x 101)
Weight	lbs (kg)	0.22 (0.10)	0.22 (0.10)	0.22 (0.10)	0.22 (0.10)
Mounting		Top-hat rail IEC/EN 60715, 35 mm	Top-hat rail IEC/EN 60715, 35 mm	Top-hat rail IEC/EN 60715, 35 mm	Top-hat rail IEC/EN 60715, 35 mm
Mounting position		Vertical	Vertical	Vertical	Vertical
Ambient Conditions, Mechanical					
Protection type (IEC/EN 60529)		IP20	IP20	IP20	IP20
Vibrations (IEC/EN 61131-2:2008)					
Constant amplitude 3.5 mm	Hz	5–8.4	5–8.4	5–8.4	5–8.4
Constant acceleration 1 g	Hz	8.4–150	8.4–150	8.4–150	8.4–150
Mechanical shock resistance (IEC/EN 60068-2-27) semi-sinusoidal 15 g/11 ms	Impacts	9	9	9	9
Drop to IEC/EN 60068-2-31 (drop height)	in (mm)	1.97 (50)	1.97 (50)	1.97 (50)	1.97 (50)
Free fall, packaged (IEC/EN 60068-2-32)	ft (m)	1.0 (0.3)	1.0 (0.3)	1.0 (0.3)	1.0 (0.3)
Electromagnetic Compatibility (EMC)					
Overvoltage category		II	II	II	II
Pollution degree		2	2	2	2
Electrostatic discharge (IEC/EN 61131-2:2008)					
Air discharge (Level 3)	kV	8	8	8	8
Contact discharge (Level 2)	kV	4	4	4	4
Electromagnetic fields (IEC/EN 61131-2:2008)					
80–1000 MHz	V/m	10	10	10	10
1.4–2 GHz	V/m	3	3	3	3
2–2.7 GHz	V/m	1	1	1	1
Radio interference suppression (SmartWire-DT)		EN 55011 Class A	EN 55011 Class A	EN 55011 Class A	EN 55011 Class A
Burst (IEC/EN 61131-2:2008, Level 3)					
Supply cables	kV	2	2	2	2
Signal lines	kV	2	2	2	2
SmartWire-DT cables	kV	2	2	2	2
Surge (IEC/EN 61131-2:2008, Level 1)		Supply cables 1.0 kV	Supply cables 1.0 kV	Supply cables 1.0 kV	Supply cables 1.0 kV
Radiated RFI (IEC/EN 61131-2:2008, Level 3)	V	10	10	10	10
Climatic Environmental Conditions					
Operating ambient temperature (IEC 60068-2)	°F (°C)	13° to 131° (–25° to 55°)	13° to 131° (–25° to 55°)	13° to 131° (–25° to 55°)	13° to 131° (–25° to 55°)
Condensation		Prevent with suitable measures	Prevent with suitable measures	Prevent with suitable measures	Prevent with suitable measures
Storage	°F (°C)	–40° to 158° (–40° to 70°)	–40° to 158° (–40° to 70°)	–40° to 158° (–40° to 70°)	–40° to 158° (–40° to 70°)
Relative humidity, noncondensing (IEC/EN 60068-2-30)	%	5–95	5–95	5–95	5–95
SmartWire-DT Network					
Station type		SmartWire-DT slave	SmartWire-DT slave	SmartWire-DT slave	SmartWire-DT slave
Baud rate setting		Automatic	Automatic	Automatic	Automatic
SmartWire-DT status LED	LED	Green	Green	Green	Green
Connection		Plug: 8-pole/Connection plug: External device plug SWD4-8SF2-5			
Current consumption (15 V SWD supply)		22 mA	22 mA	22 mA	22 mA
Connection Supply and I/O					
Connection type		Push in terminals	Push in terminals	Push in terminals	Push in terminals
Solid	mm^2	0.25–1.5 (AWG 24–16)	0.25–1.5 (AWG 24–16)	0.25–1.5 (AWG 24–16)	0.25–1.5 (AWG 24–16)
Flexible with ferrule	mm^2	0.25–1.5 (AWG 24–16)	0.25–1.5 (AWG 24–16)	0.25–1.5 (AWG 24–16)	0.25–1.5 (AWG 24–16)
24 Vdc Supply for Output Supply					
Rated operational voltage (U_e)	V	24 Vdc –15%/+20%	24 Vdc –15%/+20%	24 Vdc –15%/+20%	24 Vdc –15%/+20%
Residual ripple on the input voltage	%	≤5	≤5	≤5	≤5
Current consumption	mA	10	50	—	—
Protection against polarity reversal		Yes	Yes	Yes	Yes

Analog I/O Modules, continued

Description	Unit	EU5E-SWD-4AX	EU5E-SWD-2A2A	EU5E-SWD-4PT	EU5E-SWD-4PT-2
Analog Inputs					
Quantity		Four (two-wire connection, screened, length <10m)	Two (two-wire connection, screened, length <10m)	—	—
Parameterization					
Part no.		Voltage, current	Voltage, current	—	—
Averaging		Adjustable	Adjustable	—	—
Voltage					
Input voltage	V	0–10	0–10	—	—
Input impedance	k ohms	13.3	13.3	—	—
Maximum current					
Input current	mA	0–20	0–20	—	—
Input impedance	ohms	< 250	< 250	—	—
Resolution	Bit	12	12	—	—
Conversion time	ms	20	20	—	—
Total error	%	±1	±1	—	—
Repetition accuracy	%	±0.5	±0.5	—	—
Dielectric strength	V	±30	±30	—	—
Analog Outputs					
Number		—	Two (two-wire connection, screened)	—	—
Parameterization					
Part no.		—	Voltage, current	—	—
Averaging		—	—	—	—
Voltage					
Output voltage	V	—	0–10	—	—
Maximum output current	mA	—	10	—	—
Maximum current					
Output current	mA	—	0–20	—	—
Load resistance	ohms	—	<500	—	—
Overload and short-circuit proof		—	Yes	—	—
Resolution	Bit	—	12	—	—
Conversion time	ms	—	20	—	—
Total error	%	—	±1	—	—
Repetition accuracy	%	—	±0.5	—	—
Temperature Inputs					
Number		—	—	Four (two-, three-wire connection, screened, length <10m)	Four (two-, three-wire connection, screened, length <10m)
Parameterization					
Averaging		—	—	Adjustable	Adjustable
Temperature sensor		—	—	PT100, PT1000, Ni1000	PT100, PT1000, Ni1000
Temperature range	°F (°C)	—	—	PT100, PT1000: –58° to 392° (–50° to 200°) Ni1000: –58° to 302° (–50° to 150°)	PT100, PT1000: –148° to 752° (–100° to 400°) Ni1000: –58° to 302° (–50° to 150°)
Resolution	°F (°C)	—	—	32° (0.1°)	32° (0.1°)
Conversion time	ms	—	—	250	250
Display		—	—	°C, °F, raw value	°C, °F, raw value
Total error	%	—	—	±1	±1
Repetition accuracy	%	—	—	±0.5	±0.5
Potential Isolation					
Inputs for SmartWire-DT		Yes	Yes	Yes	Yes
Outputs to SmartWire-DT		—	Yes	—	—
Input to input		No	No	No	No
Output to input		—	No	—	—
Output to output		—	No	—	—

Accessories

Description	Unit	SWD4-RC8-10 Resistor	SWD4-8SF2-5 Plug	SWD4-8SFF2-5 Coupling	SWD4-SF8-20 Bushing
General					
Standards		IEC/EN 61131-2; EN 50178	IEC/EN 61131-2; EN 50178	IEC/EN 61131-2; EN 50178	IEC/EN 61131-2; EN 50178
Dimensions (W x H x D)	in (mm)	1.91 x 1.36 x 0.34 (48.5 x 34.5 x 10)	0.59 x 1.44 x 0.69 (15 x 36.5 x 17.5)	1.91 x 1.36 x 0.34 (48.5 x 34.5 x 10)	0.94 x 1.02 x 6.34 (24 x 26 x 162)
Weight	lbs (g)	0.022 (10)	0.012.1 (5.5)	0.010 (4.5)	0.044 (20)
Mounting position		As required	As required	As required	As required
Ambient Conditions, Mechanical					
Degree of protection (IEC/EN 60529)		IP20	IP20	IP20	IP67
Vibrations (IEC/EN 61131-2:2008)					
Constant amplitude 3.5 mm	Hz	5–8.4	5–8.4	5–8.4	—
Constant acceleration 1 g	Hz	8.4–150	8.4–150	8.4–150	—
Mechanical shock resistance (IEC/EN 60068-2-27) semi-sinusoidal 15 g/11 ms	Impacts	9	9	9	—
Drop to IEC/EN 60068-2-31 (drop height)	in (mm)	1.97 (50)	—	—	—
Free fall, packaged (IEC/EN 60068-2-32)	ft (m)	1.0 (0.3)	—	—	—
Electromagnetic Compatibility (EMC)					
Overvoltage category		II	—	—	—
Pollution degree		2	—	—	—
Electrostatic discharge (IEC/EN 61131-2:2008)					
Air discharge (Level 3)	kV	8	—	—	—
Contact discharge (Level 2)	kV	4	—	—	—
Electromagnetic fields (IEC/EN 61131-2:2008)					
80–1000 MHz	V/m	10	—	—	—
1.4–2 GHz	V/m	3	—	—	—
2–2.7 GHz	V/m	1	—	—	—
Radio interference suppression (SmartWire-DT)		EN 55011 Class A	—	—	—
Burst (IEC/EN 61131-2:2008, Level 3)					
SmartWire-DT cables	kV	1	—	—	—
Radiated RFI (IEC/EN 61131-2:2008, Level 3)	V	10	—	—	—
Climatic Environmental Conditions					
Operating ambient temperature (IEC 60068-2)	°F (°C)	–13° to 131° (–25° to 55°)	–13° to 131° (–25° to 55°)	–13° to 131° (–25° to 55°)	–13° to 131° (–25° to 55°)
Condensation		Prevent with suitable measures			
Storage	°F (°C)	–40° to 158° (–40° to 70°)	–40° to 158° (–40° to 70°)	–40° to 158° (–40° to 70°)	–40° to 158° (–40° to 70°)
Relative humidity, noncondensing (IEC/EN 60068-2-30)	%	5 –95	5 –95	5 –95	5 –95
Connection Options					
SWD-In		Plug, 8-pole	Plug connector	Plug, 8-pole	—
Number of insertion cycles		≥200	1	>200	—
SWD-Out		—	Socket, 8-pole	Plug, 8-pole	Socket, 8-pole
Number of insertion cycles		—	≥200	≥200	≥500
Current consumption (15 V SWD supply)		17 mA	—	—	—

Accessories, continued

Description	Unit	SWD4-SM8-20 Bushing	SWD4-8FRF-10 Adapter	SWD4-SFL8-20 Adapter	SWD4-SML8-20 Adapter
General					
Standards		IEC/EN 61131-2; EN 50178	IEC/EN 61131-2; EN 50178	IEC/EN 61131-2; EN 50178	IEC/EN 61131-2; EN 50178
Dimensions (W x H x D)	in (mm)	0.94 x 1.02 x 6.69 (24 x 26 x 170)	1.38 x 3.54 x 1.38 (35 x 90 x 35)	1.38 x 3.27 x 1.57 (35 x 83 x 40)	1.38 x 3.27 x 1.82 (35 x 83 x 46)
Weight	lbs (g)	0.050 (22.5)	0.093 (42)	0.110 (50)	0.110 (50)
Mounting position		As required	As required	As required	As required
Ambient Conditions, Mechanical					
Degree of protection (IEC/EN 60529)		IP67	IP20	IP67	IP67
Vibrations (IEC/EN 61131-2:2008)					
Constant amplitude 3.5 mm	Hz	—	5–8.4	5–8.4	5–8.4
Constant acceleration 1 g	Hz	—	8.4–150	8.4–150	8.4–150
Mechanical shock resistance (IEC/EN 60068-2-27) semi-sinusoidal 15 g/11 ms	Impacts	—	9	9	9
Drop to IEC/EN 60068-2-31 (drop height)	in (mm)	—	—	—	—
Free fall, packaged (IEC/EN 60068-2-32)	ft (m)	—	—	—	—
Electromagnetic Compatibility (EMC)					
Overvoltage category		—	—	—	—
Pollution degree		—	—	—	—
Electrostatic discharge (IEC/EN 61131-2:2008)					
Air discharge (Level 3)	kV	—	8	8	8
Contact discharge (Level 2)	kV	—	4	4	4
Electromagnetic fields (IEC/EN 61131-2:2008)					
80–1000 MHz	V/m	—	—	10	10
1.4–2 GHz	V/m	—	—	3	3
2–2.7 GHz	V/m	—	—	1	1
Radio interference suppression (SmartWire-DT)		—	—	—	—
Burst (IEC/EN 61131-2:2008, Level 3)		—	—	—	—
SmartWire-DT cables	kV	—	—	—	—
Radiated RFI (IEC/EN 61131-2:2008, Level 3)	V	—	—	10	10
Climatic Environmental Conditions					
Operating ambient temperature (IEC 60068-2)	°F (°C)	–13° to 131° (–25° to 55°)	–13° to 131° (–25° to 55°)	–13° to 131° (–25° to 55°)	–13° to 131° (–25° to 55°)
Condensation		Prevent with suitable measures			
Storage	°F (°C)	–40° to 158° (–40° to 70°)	–40° to 158° (–40° to 70°)	–40° to 158° (–40° to 70°)	–40° to 158° (–40° to 70°)
Relative humidity, noncondensing (IEC/EN 60068-2-30)	%	5–95	5–95	5–95	5–95
Connection Options					
SWD-In		Plug, 8-pole	Plug, 8-pole	Plug, 8-pole	Plug, 8-pole
Number of insertion cycles		≥500	≥200	≥200	≥500
SWD-Out		—	Push in terminals	Socket, 8-pole	Plug, 8-pole
Number of insertion cycles		—	—	≥500	≥200

Machine Mount I/O Modules

Description	Unit	EU1E-SWD-1DX	EU1E-SWD-2DX	EU1E-SWD-2DD	EU1E-SWD-1AX-1	EU1E-SWD-1AX-2	EU1E-SWD-1XA-1
General							
Standards				IEC / EN 61131-2, EN50178, IEC / EN 60529			
Dimensions (W x H x L)—reference only	mm	41 x 20 x 59	41 x 20 x 59	41 x 20 x 59	41 x 20 x 59	41 x 20 x 59	41 x 20 x 59
Weight	g / oz	65 / 2.3	65 / 2.3	65 / 2.3	65 / 2.3	65 / 2.3	65 / 2.3
Form factor		Single-T	Single-T	Single-T	Single-T	Single-T	Single-T
Enclosure material		MM 6208 (black)	MM 6208 (black)	MM 6208 (black)	MM 6208 (black)	MM 6208 (black)	MM 6208 (black)
Mounting	Qty	2 mounting holes or with bracket accessory	2 mounting holes or with bracket accessory	2 mounting holes or with bracket accessory	2 mounting holes or with bracket accessory	2 mounting holes or with bracket accessory	2 mounting holes or with bracket accessory
Ambient Conditions, Mechanical							
Protection type	Type	IP69K	IP69K	IP69K	IP69K	IP69K	IP69K
EN/IEC 60529	Type	IP6X / IPX7	IP6X / IPX7	IP6X / IPX7	IP6X / IPX7	IP6X / IPX7	IP6X / IPX7
UL Type		1	1	1	1	1	1
Vibrations							
Displacement 3.5 mm	Hz	5–8.4	5–8.4	5–8.4	5–8.4	5–8.4	5–8.4
Acceleration 1 g	Hz	8.4–150	8.4–150	8.4–150	8.4–150	8.4–150	8.4–150
Shock IEC 60068-2-27 1/2 sine 30 g/11 ms	Impacts	9	9	9	9	9	9
Drop to	Height, mm	50	50	50	50	50	50
Drop freefall	m	0.3	0.3	0.3	0.3	0.3	0.3
EMC							
Overvoltage category		II	II	II	II	II	II
Pollution degree		3	3	3	3	3	3
Electrostatic discharge		Performance Criterion B	Performance Criterion B	Performance Criterion B	Performance Criterion B	Performance Criterion B	Performance Criterion B
Air discharge (level 3)	kV	8	8	8	8	8	8
Contact discharge (level 2)	kV	4	4	4	4	4	4
Electromagnetic fields		Performance Criterion A	Performance Criterion A	Performance Criterion A	Performance Criterion A	Performance Criterion A	Performance Criterion A
80–1000 MHz	V/m	10	10	10	10	10	10
1.4–2 G	V/m	3	3	3	3	3	3
2–2.7 G	V/m	1	1	1	1	1	1
Radio interference suppression (SmartWire-DT) (emission and conducted interface voltage)	EN 55011	Class A	Class A	Class A	Class A	Class A	Class A
Burst (level 3)		Performance Criterion B	Performance Criterion B	Performance Criterion B	Performance Criterion B	Performance Criterion B	Performance Criterion B
Supply cables	kV	2	2	2	2	2	2
Signal cables	kV	1	1	1	1	1	1
SmartWire-DT cables	kV	1	1	1	2	2	2
Surge (level 1)		Performance Criterion B	Performance Criterion B	Performance Criterion B	Performance Criterion B	Performance Criterion B	Performance Criterion B
Supply cables	kV	0.5	0.5	0.5	0.5	0.5	0.5
I/O cables	kV	1	1	1	1	1	1
SmartWire-DT cables	kV	1	1	1	1	1	1
Radiated RFI (level 3) (150 kHz – 80 MHz)		Performance Criterion A	Performance Criterion A	Performance Criterion A	Performance Criterion A	Performance Criterion A	Performance Criterion A
Supply cables	V	10	10	10	10	10	10
I/O cables	V	10	10	10	10	10	10
SmartWire-DT cables	V	10	10	10	10	10	10
Voltage drops & interrupts	mS	10	10	10	10	10	10
Climatic Environmental Conditions							
Ambient temperature	Degrees C	–25 to +70	–25 to +70	–25 to +70	–25 to +70	–25 to +70	–25 to +70
Storage temperature	Degrees C	–40 to +70	–40 to +70	–40 to +70	–40 to +70	–40 to +70	–40 to +70
Humidity	% RH	95 at 55 °C / 5–95 condensation permitted	95 at 55 °C / 5–95 condensation permitted	95 at 55 °C / 5–95 condensation permitted	95 at 55 °C / 5–95 condensation permitted	95 at 55 °C / 5–95 condensation permitted	95 at 55 °C / 5–95 condensation permitted

Machine Mount I/O Modules, continued

Description	Unit	EU1E-SWD-1DX	EU1E-SWD-2DX	EU1E-SWD-2DD	EU1E-SWD-1AX-1	EU1E-SWD-1AX-2	EU1E-SWD-1XA-1
SmartWire-DT Network							
Stations type		SmartWire-DT slave	SmartWire-DT slave	SmartWire-DT slave	SmartWire-DT slave	SmartWire-DT slave	SmartWire-DT slave
Baud rate setting		Automatic	Automatic	Automatic	Automatic	Automatic	Automatic
Maximum	Bit/sec	2 M	2 M	2 M	2 M	2 M	2 M
SW-DT Status LED		Green (625 nm)	Green (625 nm)	Green (625 nm)	Green (625 nm)	Green (625 nm)	Green (625 nm)
Connectors, (IEC-61076-2-101)	M12 A Coding	—	—	—	—	—	—
SW-DT network input connector		M12-M / 5-pole	M12-M / 5-pole	M12-M 5-pole	M12-M 5-pole	M12-M 5-pole	M12-M 5-pole
Pin 1		24 Vdc	24 Vdc	24 Vdc	24 Vdc	24 Vdc	24 Vdc
Pin 2		Data A	Data A	Data A	Data A	Data A	Data A
Pin 3		GND	GND	GND	GND	GND	GND
Pin 4		Data B	Data B	Data B	Data B	Data B	Data B
Pin 5		SEL (IN)	SEL (IN)	SEL (IN)	SEL (IN)	SEL (IN)	SEL (IN)
SW-DT network output connector		M12-F / 5-pole	M12-F / 5-pole	M12-F 5-pole	M12-F 5-pole	M12-F 5-pole	M12-F 5-pole
Pin 1		24 Vdc	24 Vdc	24 Vdc	24 Vdc	24 Vdc	24 Vdc
Pin 2		Data A	Data A	Data A	Data A	Data A	Data A
Pin 3		GND	GND	GND	GND	GND	GND
Pin 4		Data B	Data B	Data B	Data B	Data B	Data B
Pin 5		SEL (OUT)	SEL (OUT)	SEL (OUT)	SEL (OUT)	SEL (OUT)	SEL (OUT)
24 Vdc Power							
SWD-T bus 24 Vdc							
Rated operational voltage	V/U_e	24 V –15% +20%	24 V –15% +20%	24 V –15% +20%	24 V –15% +20%	24 V –15% +20%	24 V –15% +20%
Residual ripple on the input voltage	%	≤5	≤5	≤5	≤5	≤5	≤5
Reverse Polarity Protection		Yes	Yes	Yes	Yes	Yes	Yes
Rated supply current	mA	55	55	58	46	46	52
Actuator external 24 Vdc							
Rated operational voltage	V/U_e	—	—	—	—	—	—
Reverse polarity protection		—	—	—	—	—	—
Maximum Current (total)	A	—	—	—	—	—	—
Connectors		—	—	—	—	—	—
Power in	Male	—	—	—	—	—	—
Pin 1	Std len	—	—	—	—	—	—
Pin 2	Std len	—	—	—	—	—	—
Pin 3	Std len	—	—	—	—	—	—
Pin 4	Ext len	—	—	—	—	—	—
Power out	Female	—	—	—	—	—	—
Pin 1		—	—	—	—	—	—
Pin 2		—	—	—	—	—	—
Pin 3		—	—	—	—	—	—
Pin 4		—	—	—	—	—	—
Power indication LED	Power in	—	—	—	—	—	—
Digital Inputs							
Input current	mA	Nominal 4 at 24 Vdc	Nominal 4 at 24 Vdc	Nominal 4 at 24 Vdc	—	—	—
Voltage level to (IEC / EN 61131-2)							
Limit value type 1		L < 5 Vdc; H > 15 Vdc	L < 5 Vdc; H > 15 Vdc	L < 5 Vdc; H > 15 Vdc	—	—	—
Input delay		H->L or L->H < 0.2 ms	H->L or L->H < 0.2 ms	H->L or L->H < 0.2 ms	—	—	—
Status display	LED	Yellow	Yellow	Yellow	—	—	—

Machine Mount I/O Modules, continued

Description	Unit	EU1E-SWD-1DX	EU1E-SWD-2DX	EU1E-SWD-2DD	EU1E-SWD-1AX-1	EU1E-SWD-1AX-2	EU1E-SWD-1XA-1
Digital Outputs							
Output driver circuit power source	Bus/ext	—	—	Bus	—	—	—
Output current	A	—	—	0.5 at 24 Vdc	—	—	—
Trip current SC	A	—	—	1.2 over 3 ms	—	—	—
Lamp load	W	—	—	≤3	—	—	—
Overload proof (IEC / EN 61131-2)		—	—	Yes w/diag	—	—	—
Switching capacity IEC 60947-5-1		—	—	DC-13	—	—	—
Status display	LED	—	—	Yellow	—	—	—
Total current all outputs	A	—	—	1	—	—	—
Analog							
Parameter setting							
Refresh rate	mS	—	—	—	20, 100, 250, 500	20, 100, 250, 500	—
Averaging (5 msec sample interval)	ON/OFF	—	—	—	ON/OFF	ON/OFF	—
Voltage							
Input voltage	V	—	—	—	0–10 Vdc	—	—
Input impedance	kohm	—	—	—	20	—	—
Output voltage	V	—	—	—	—	—	0–10 Vdc
Maximum output current	mA	—	—	—	—	—	10
Source impedance	kohm	—	—	—	—	—	0.22
Current							
Input current	mA	—	—	—	—	0–20 mA	—
Input impedance	ohms	—	—	—	—	225	—
Output current	mA	—	—	—	—	—	—
Source impedance	ohms	—	—	—	—	—	—
Converter							
Resolution	Bit	—	—	—	12	12	12
Conversion time	ms	—	—	—	20	20	20
Cumulative error	%	—	—	—	±1.0	±1.0	±1.0
Repetition accuracy	%	—	—	—	±0.5	±0.5	±0.5
Encoder							
Frequency response	Hz	—	—	—	—	—	—
Status indication LED							
Count pulse		—	—	—	—	—	—
Encoder status (input byte 0)	Bit	—	—	—	—	—	—
Referencing active status	0	—	—	—	—	—	—
Reference status	1	—	—	—	—	—	—
Reference line state	2	—	—	—	—	—	—
Zero crossing	3	—	—	—	—	—	—
Control settings (output byte 0)	Bit	—	—	—	—	—	—
Count control	0	—	—	—	—	—	—
Reference enable (ActRef)	1	—	—	—	—	—	—
Reference control	2	—	—	—	—	—	—
Asynchronous reset	3	—	—	—	—	—	—
Zero crossing acknowledge	4	—	—	—	—	—	—

Machine Mount I/O Modules, continued

Description	Unit	EU1E-SWD-1DX	EU1E-SWD-2DX	EU1E-SWD-2DD	EU1E-SWD-1AX-1	EU1E-SWD-1AX-2	EU1E-SWD-1XA-1
Temperature							
Parameter setting							
Temperature sensor		—	—	—	—	—	—
Averaging		—	—	—	—	—	—
Range		—	—	—	—	—	—
Temperature range							
PT100 (1)	°C	—	—	—	—	—	—
PT1000 (1)	°C	—	—	—	—	—	—
Ni1000 (1)	°C	—	—	—	—	—	—
PT100 (2)	°C	—	—	—	—	—	—
PT1000 (2)	°C	—	—	—	—	—	—
Ni1000 (2)	°C	—	—	—	—	—	—
Converter							
Resolution (converter)	Bit	—	—	—	—	—	—
Conversion time	ms	—	—	—	—	—	—
Cumulative error	%	—	—	—	—	—	—
Repetition accuracy	%	—	—	—	—	—	—
Display		—	—	—	—	—	—
Resolution (temperature)	°C	—	—	—	—	—	—
I/O Configurations							
24 Vdc bus power to I/O devices	Y/N	Yes	Yes	Yes	Yes	Yes	Yes
Galvanic isolation of I/O circuitry	Y/N	No	No	No	No	No	No
Operating power per connection	A	0.3	0.3	0.3	0.3	0.3	0.3
Internally power limited (PTC)	Y/N	Yes	Yes	Yes	Yes	Yes	Yes
Overload threshold per connection	A	0.6	0.6	0.6	0.6	0.6	0.6
Overload recovery time	S	0.6	0.6	0.6	0.6	0.6	0.6
Maximum allowed total current	A	1	1	1	1	1	1
I/O types							
Configurable (digital I/O)	I/O point	—	—	2	—	—	—
Digital IN (sinking)	I/O point	1	2	Up to 2	—	—	—
Digital OUT (sourcing)	I/O point	—	—	Up to 2	—	—	—
Analog IN	I/O point	—	—	—	1	1	—
Analog OUT	I/O point	—	—	—	—	—	1
Encoder IN	I/O point	—	—	—	—	—	—
Temperature sensor input	I/O point	—	—	—	—	—	—
I/O connectors, (IEC-61076-2-101)	M12 A Coding	1x M12-F / 5-pole	1x M12-F / 5-pole	1x M12-F / 5-pole	1x M12-F / 5-pole	1x M12-F / 5-pole	1x M12-F / 5-pole
Active circuits loaded in connector	Circuits	3	4	4	4	4	4

Machine Mount I/O Modules, continued

Description	Unit	EU1E-SWD-1DX	EU1E-SWD-2DX	EU1E-SWD-2DD	EU1E-SWD-1AX-1	EU1E-SWD-1AX-2	EU1E-SWD-1XA-1
I/O Configurations, continued							
I/O connector pin outs		—	—	—	—	—	—
I/O Connector–1							
Pin 1		24 Vdc	24 Vdc	24 Vdc	24 Vdc	24 Vdc	24 Vdc
Pin 2		N/C	Input Ch 1	I/O Ch 1	In -	In -	Out -
Pin 3		GND	GND	GND	GND	GND	GND
Pin 4		Input Ch 0	Input Ch 0	I/O Ch 0	In +	In +	Out +
Pin 5		N/C	N/C	N/C	N/C	N/C	N/C
Pin 6		—	—	—	—	—	—
Pin 7		—	—	—	—	—	—
Pin 8		—	—	—	—	—	—
I/O Connector–2							
Pin 1		—	—	—	—	—	—
Pin 2		—	—	—	—	—	—
Pin 3		—	—	—	—	—	—
Pin 4		—	—	—	—	—	—
Pin 5		—	—	—	—	—	—
I/O Connector–3							
Pin 1		—	—	—	—	—	—
Pin 2		—	—	—	—	—	—
Pin 3		—	—	—	—	—	—
Pin 4		—	—	—	—	—	—
Pin 5		—	—	—	—	—	—
I/O Connector–4							
Pin 1		—	—	—	—	—	—
Pin 2		—	—	—	—	—	—
Pin 3		—	—	—	—	—	—
Pin 4		—	—	—	—	—	—
Pin 5		—	—	—	—	—	—
I/O Connector–5							
Pin 1		—	—	—	—	—	—
Pin 2		—	—	—	—	—	—
Pin 3		—	—	—	—	—	—
Pin 4		—	—	—	—	—	—
Pin 5		—	—	—	—	—	—
I/O Connector–6							
Pin 1		—	—	—	—	—	—
Pin 2		—	—	—	—	—	—
Pin 3		—	—	—	—	—	—
Pin 4		—	—	—	—	—	—
Pin 5		—	—	—	—	—	—
I/O Connector–7							
Pin 1		—	—	—	—	—	—
Pin 2		—	—	—	—	—	—
Pin 3		—	—	—	—	—	—
Pin 4		—	—	—	—	—	—
Pin 5		—	—	—	—	—	—
I/O Connector–8							
Pin 1		—	—	—	—	—	—
Pin 2		—	—	—	—	—	—
Pin 3		—	—	—	—	—	—
Pin 4		—	—	—	—	—	—
Pin 5		—	—	—	—	—	—

Machine Mount I/O Modules, continued

Description	Unit	EU1E-SWD-1XA-2	EU1E-SWD-1CX	EU2E-SWD-2DX	EU2E-SWD-4DX	EU2E-SWD-4DD	EU2E-SWD-4DD-1
General							
Standards				IEC / EN 61131-2, EN50178, IEC / EN 60529			
Dimensions (W x H x L)—reference only	mm	41 x 20 x 59	41 x 20 x 59	41 x 20 x 71	41 x 20 x 71	41 x 20 x 71	41 x 20 x 71
Weight	g / oz	65 / 2.3	65 / 2.3	85 / 3.0	85 / 3.0	85 / 3.0	85 / 3.0
Form factor		Single-T	Single-T	Dual-T	Dual-T	Dual-T	Dual-T
Enclosure material		MM 6208 (black)	MM 6208 (black)	MM 6208 (black)	MM 6208 (black)	MM 6208 (black)	MM 6208 (black)
Mounting	Qty	2 mounting holes or with bracket accessory	2 mounting holes or with bracket accessory	2 mounting holes or with bracket accessory	2 mounting holes or with bracket accessory	2 mounting holes or with bracket accessory	2 mounting holes or with bracket accessory
Ambient Conditions, Mechanical							
Protection type	Type	IP69K	IP69K	IP69K	IP69K	IP69K	IP69K
EN/IEC 60529	Type	IP6X / IPX7	IP6X / IPX7	IP6X / IPX7	IP6X / IPX7	IP6X / IPX7	IP6X / IPX7
UL Type		1	1	1	1	1	1
Vibrations							
Displacement 3.5 mm	Hz	5–8.4	5–8.4	5–8.4	5–8.4	5–8.4	5–8.4
Acceleration 1 g	Hz	8.4–150	8.4–150	8.4–150	8.4–150	8.4–150	8.4–150
Shock IEC 60068-2-27 1/2 sine 30 g/11 ms	Impacts	9	9	9	9	9	9
Drop to	Height, mm	50	50	50	50	50	50
Drop freefall	m	0.3	0.3	0.3	0.3	0.3	0.3
EMC							
Overvoltage category		II	II	II	II	II	II
Pollution degree		3	3	3	3	3	3
Electrostatic discharge		Performance Criterion B	Performance Criterion B	Performance Criterion B	Performance Criterion B	Performance Criterion B	Performance Criterion B
Air discharge (level 3)	kV	8	8	8	8	8	8
Contact discharge (level 2)	kV	4	4	4	4	4	4
Electromagnetic fields		Performance Criterion A	Performance Criterion A	Performance Criterion A	Performance Criterion A	Performance Criterion A	Performance Criterion A
80–1000 MHz	V/m	10	10	10	10	10	10
1.4–2 G	V/m	3	3	3	3	3	3
2–2.7 G	V/m	1	1	1	1	1	1
Radio interference suppression (SmartWire-DT) (emission and conducted interface voltage)	EN 55011	Class A	Class A	Class A	Class A	Class A	Class A
Burst (level 3)		Performance Criterion B	Performance Criterion B	Performance Criterion B	Performance Criterion B	Performance Criterion B	Performance Criterion B
Supply cables	kV	2	2	2	2	2	2
Signal cables	kV	1	1	1	1	1	1
SmartWire-DT cables	kV	2	1	1	1	1	1
Surge (level 1)		Performance Criterion B	Performance Criterion B	Performance Criterion B	Performance Criterion B	Performance Criterion B	Performance Criterion B
Supply cables	kV	0.5	0.5	0.5	0.5	0.5	0.5
I/O cables	kV	1	1	1	1	1	1
SmartWire-DT cables	kV	1	1	1	1	1	1
Radiated RFI (level 3) (150 kHz – 80 MHz)		Performance Criterion A	Performance Criterion A	Performance Criterion A	Performance Criterion A	Performance Criterion A	Performance Criterion A
Supply cables	V	10	10	10	10	10	10
I/O cables	V	10	10	10	10	10	10
SmartWire-DT cables	V	10	10	10	10	10	10
Voltage drops & interrupts	mS	10	10	10	10	10	10
Climatic Environmental Conditions							
Ambient temperature	Degrees C	–25 to +70	–25 to +70	–25 to +70	–25 to +70	–25 to +70	–25 to +70
Storage temperature	Degrees C	–40 to +70	–40 to +70	–40 to +70	–40 to +70	–40 to +70	–40 to +70
Humidity	% RH	95 at 55 °C / 5–95 condensation permitted	95 at 55 °C / 5–95 condensation permitted	95 at 55 °C / 5–95 condensation permitted	95 at 55 °C / 5–95 condensation permitted	95 at 55 °C / 5–95 condensation permitted	95 at 55 °C / 5–95 condensation permitted

Machine Mount I/O Modules, continued

Description	Unit	EU1E-SWD-1XA-2	EU1E-SWD-1CX	EU2E-SWD-2DX	EU2E-SWD-4DX	EU2E-SWD-4DD	EU2E-SWD-4DD-1
SmartWire-DT Network							
Stations type		SmartWire-DT slave	SmartWire-DT slave	SmartWire-DT slave	SmartWire-DT slave	SmartWire-DT slave	SmartWire-DT slave
Baud rate setting		Automatic	Automatic	Automatic	Automatic	Automatic	Automatic
Maximum	Bit/sec	2 M	2 M	2 M	2 M	2 M	2 M
SW-DT Status LED		Green (625 nm)	Green (625 nm)	Green (625 nm)	Green (625 nm)	Green (625 nm)	Green (625 nm)
Connectors, (IEC-61076-2-101)	M12 A Coding	—	—	—	—	—	—
SW-DT network input connector		M12-M 5-pole	M12-M 5-pole	M12-M 5-pole	M12-M 5-pole	M12-M 5-pole	M12-M 5-pole
Pin 1		24 Vdc	24 Vdc	24 Vdc	24 Vdc	24 Vdc	24 Vdc
Pin 2		Data A	Data A	Data A	Data A	Data A	Data A
Pin 3		GND	GND	GND	GND	GND	GND
Pin 4		Data B	Data B	Data B	Data B	Data B	Data B
Pin 5		SEL (IN)	SEL (IN)	SEL (IN)	SEL (IN)	SEL (IN)	SEL (IN)
SW-DT network output connector		M12-F 5-pole	M12-F 5-pole	M12-F 5-pole	M12-F 5-pole	M12-F 5-pole	M12-F 5-pole
Pin 1		24 Vdc	24 Vdc	24 Vdc	24 Vdc	24 Vdc	24 Vdc
Pin 2		Data A	Data A	Data A	Data A	Data A	Data A
Pin 3		GND	GND	GND	GND	GND	GND
Pin 4		Data B	Data B	Data B	Data B	Data B	Data B
Pin 5		SEL (OUT)	SEL (OUT)	SEL (OUT)	SEL (OUT)	SEL (OUT)	SEL (OUT)
24 Vdc Power							
SWD-T bus 24 Vdc							
Rated operational voltage	V/U_e	24 V –15% +20%	24 V –15% +20%	24 V –15% +20%	24 V –15% +20%	24 V –15% +20%	24 V –15% +20%
Residual ripple on the input voltage	%	≤5	≤5	≤5	≤5	≤5	≤5
Reverse Polarity Protection		Yes	Yes	Yes	Yes	Yes	Yes
Rated supply current	mA	67	57	55	75	2080	2080
Actuator external 24 Vdc							
Rated operational voltage	V/U_e	—	—	—	—	—	—
Reverse polarity protection		—	—	—	—	—	—
Maximum Current (total)	A	—	—	—	—	—	—
Connectors		—	—	—	—	—	—
Power in	Male	—	—	—	—	—	—
Pin 1	Std len	—	—	—	—	—	—
Pin 2	Std len	—	—	—	—	—	—
Pin 3	Std len	—	—	—	—	—	—
Pin 4	Ext len	—	—	—	—	—	—
Power out	Female	—	—	—	—	—	—
Pin 1		—	—	—	—	—	—
Pin 2		—	—	—	—	—	—
Pin 3		—	—	—	—	—	—
Pin 4		—	—	—	—	—	—
Power indication LED	Power in	—	—	—	—	—	—
Digital Inputs							
Input current	mA	—	Nominal 4 at 24 Vdc	Nominal 4 at 24 Vdc	Nominal 4 at 24 Vdc	Nominal 4 at 24 Vdc	Nominal 4 at 24 Vdc
Voltage level to (IEC / EN 61131-2)		—	—	—	—	—	—
Limit value type 1		—	L < 5 Vdc; H > 15 Vdc	L < 5 Vdc; H > 15 Vdc	L < 5 Vdc; H > 15 Vdc	L < 5 Vdc; H > 15 Vdc	L < 5 Vdc; H > 15 Vdc
Input delay		—	H->L or L->H < 0.01ms	H->L or L->H < 0.2 ms	H->L or L->H < 0.2 ms	H->L or L->H < 0.2 ms	H->L or L->H < 0.2 ms
Status display	LED	—	—	Yellow	Yellow	Yellow	Yellow

Machine Mount I/O Modules, continued

Description	Unit	EU1E-SWD-1XA-2	EU1E-SWD-1CX	EU2E-SWD-2DX	EU2E-SWD-4DX	EU2E-SWD-4DD	EU2E-SWD-4DD-1
Digital Outputs							
Output driver circuit power source	Bus/ext	—	—	—	—	Bus	Bus
Output current	A	—	—	—	—	0.5 at 24 Vdc	0.5 at 24 Vdc
Trip current SC	A	—	—	—	—	1.2 over 3 ms	1.2 over 3 ms
Lamp load	W	—	—	—	—	≤3	≤3
Overload proof (IEC / EN 61131-2)		—	—	—	—	Yes w/diag	Yes w/diag
Switching capacity IEC 60947-5-1		—	—	—	—	DC-13	DC-13
Status display	LED	—	—	—	—	Yellow	Yellow
Total current all outputs	A	—	—	—	—	2	1.5
Analog							
Parameter setting							
Refresh rate	mS	—	—	—	—	—	—
Averaging (5 msec sample interval)	ON/OFF	—	—	—	—	—	—
Voltage							
Input voltage	V	—	—	—	—	—	—
Input impedance	kohm	—	—	—	—	—	—
Output voltage	V	—	—	—	—	—	—
Maximum output current	mA	—	—	—	—	—	—
Source impedance	kohm	—	—	—	—	—	—
Current							
Input current	mA	—	—	—	—	—	—
Input impedance	ohms	—	—	—	—	—	—
Output current	mA	0–20 mA	—	—	—	—	—
Source impedance	ohms	100	—	—	—	—	—
Converter							
Resolution	Bit	12	—	—	—	—	—
Conversion time	ms	20	—	—	—	—	—
Cumulative error	%	±1.0	—	—	—	—	—
Repetition accuracy	%	±0.5	—	—	—	—	—
Encoder							
Frequency response	Hz	—	max 15 K	—	—	—	—
Status indication LED							
Count pulse		—	Yellow	—	—	—	—
Encoder status (input byte 0)	Bit	—		—	—	—	—
Referencing active status	0	—	1 = Set by ActRef;	—	—	—	—
Reference status	1	—	1 = Referenced	—	—	—	—
Reference line state	2	—	1 = (R=1); 0 = (R=0)	—	—	—	—
Zero crossing	3	—	1 = (Cnt= 0); 0 = (Cnt <>0)	—	—	—	—
Control settings (output byte 0)	Bit	—		—	—	—	—
Count control	0	—	1 = Hold; 0 = Count	—	—	—	—
Reference enable (ActRef)	1	—	1 = Enable;	—	—	—	—
Reference control	2	—	1 = Permanent; 0 = Once	—	—	—	—
Asynchronous reset	3	—	1 = Asyc Reset (Cntr = Ref);	—	—	—	—
Zero crossing acknowledge	4	—	1 = Reset ZCA bit; 0	—	—	—	—

Machine Mount I/O Modules, continued

Description	Unit	EU1E-SWD-1XA-2	EU1E-SWD-1CX	EU2E-SWD-2DX	EU2E-SWD-4DX	EU2E-SWD-4DD	EU2E-SWD-4DD-1
Temperature							
Parameter setting							
Temperature sensor		—	—	—	—	—	—
Averaging		—	—	—	—	—	—
Range		—	—	—	—	—	—
Temperature range							
PT100 (1)	°C	—	—	—	—	—	—
PT1000 (1)	°C	—	—	—	—	—	—
Ni1000 (1)	°C	—	—	—	—	—	—
PT100 (2)	°C	—	—	—	—	—	—
PT1000 (2)	°C	—	—	—	—	—	—
Ni1000 (2)	°C	—	—	—	—	—	—
Converter							
Resolution (converter)	Bit	—	—	—	—	—	—
Conversion time	ms	—	—	—	—	—	—
Cumulative error	%	—	—	—	—	—	—
Repetition accuracy	%	—	—	—	—	—	—
Display		—	—	—	—	—	—
Resolution (temperature)	°C	—	—	—	—	—	—
I/O Configurations							
24 Vdc bus power to I/O devices	Y/N	—	—	—	—	—	—
Galvanic isolation of I/O circuitry	Y/N	Yes	Yes	Yes	Yes	Yes	Yes
Operating power per connection	A	No	No	No	No	No	No
Internally power limited (PTC)	Y/N	0.3	0.3	0.3	0.3	0.3	0.3
Overload threshold per connection	A	Yes	Yes	Yes	Yes	Yes	Yes
Overload recovery time	S	0.6	0.6	0.6	0.6	0.6	0.6
Maximum allowed total current	A	1	1	1	2	2	2
I/O types		1	1	2	2	2	2
Configurable (digital I/O)	I/O point	—	—	—	—	—	—
Digital IN (sinking)	I/O point	—	—	—	—	4	4
Digital OUT (sourcing)	I/O point	—	—	2	4	Up to 4	Up to 4
Analog IN	I/O point	—	—	—	—	Up to 4	Up to 4
Analog OUT	I/O point	—	—	—	—	—	—
Encoder IN	I/O point	1	—	—	—	—	—
Temperature sensor input	I/O point	—	3	—	—	—	—
I/O connectors, (IEC-61076-2-101)	M12 A Coding	—	—	—	—	—	—
Active circuits loaded in connector	Circuits	1x M12-F / 5-pole	1x M12-F / 5-pole	2x M12-F / 5-pole	2x M12-F / 5-pole	2x M12-F / 5-pole	2x M12-F / 5-pole

Machine Mount I/O Modules, continued

Description	Unit	EU1E-SWD-1XA-2	EU1E-SWD-1CX	EU2E-SWD-2DX	EU2E-SWD-4DX	EU2E-SWD-4DD	EU2E-SWD-4DD-1
I/O Configurations, continued							
I/O connector pin outs							
I/O Connector–1							
Pin 1		24 Vdc	24 Vdc	24 Vdc	24 Vdc	24 Vdc	24 Vdc
Pin 2		Out -	Ch B	N/C	In Ch 1	I/O Ch 1	N/C
Pin 3		GND	GND	GND	GND	GND	GND
Pin 4		Out +	Ch A	In Ch 0	In Ch 0	I/O Ch 0	I/O Ch 0
Pin 5		N/C	Ch R	N/C	In Ch 3	N/C	N/C
Pin 6		—	—	—	—	—	—
Pin 7		—	—	—	—	—	—
Pin 8		—	—	—	—	—	—
I/O Connector–2							
Pin 1		—	—	24 Vdc	24 Vdc	24 Vdc	24 Vdc
Pin 2		—	—	N/C	In Ch 3	I/O Ch 3	I/O Ch 3
Pin 3		—	—	GND	GND	GND	GND
Pin 4		—	—	In Ch 2	In Ch 2	I/O Ch 2	I/O Ch 2
Pin 5		—	—	N/C	In Ch 1	N/C	I/O Ch 1
I/O Connector–3							
Pin 1		—	—	—	—	—	—
Pin 2		—	—	—	—	—	—
Pin 3		—	—	—	—	—	—
Pin 4		—	—	—	—	—	—
Pin 5		—	—	—	—	—	—
I/O Connector–4							
Pin 1		—	—	—	—	—	—
Pin 2		—	—	—	—	—	—
Pin 3		—	—	—	—	—	—
Pin 4		—	—	—	—	—	—
Pin 5		—	—	—	—	—	—
I/O Connector–5							
Pin 1		—	—	—	—	—	—
Pin 2		—	—	—	—	—	—
Pin 3		—	—	—	—	—	—
Pin 4		—	—	—	—	—	—
Pin 5		—	—	—	—	—	—
I/O Connector–6							
Pin 1		—	—	—	—	—	—
Pin 2		—	—	—	—	—	—
Pin 3		—	—	—	—	—	—
Pin 4		—	—	—	—	—	—
Pin 5		—	—	—	—	—	—
I/O Connector–7							
Pin 1		—	—	—	—	—	—
Pin 2		—	—	—	—	—	—
Pin 3		—	—	—	—	—	—
Pin 4		—	—	—	—	—	—
Pin 5		—	—	—	—	—	—
I/O Connector–8							
Pin 1		—	—	—	—	—	—
Pin 2		—	—	—	—	—	—
Pin 3		—	—	—	—	—	—
Pin 4		—	—	—	—	—	—
Pin 5		—	—	—	—	—	—

Machine Mount I/O Modules, continued

Description	Unit	EU2E-SWD-2PT	EU6E-SWD-4DX	EU6E-SWD-4XD-1	EU6E-SWD-4XD-2	EU6E-SWD-2D2D-1	EU6E-SWD-2D2D-2
General							
Standards				IEC / EN 61131-2, EN50178, IEC / EN 60529			
Dimensions (W x H x L)—reference only	mm	41 x 20 x 71	60 x 20 x As Req	60 x 20 x As Req	60 x 20 x As Req	60 x 20 x As Req	60 x 20 x As Req
Weight	g / oz	85 / 3.0	234 / 8.3	267 / 9.4	267 / 9.4	267 / 9.4	267 / 9.4
Form factor		Dual-T	MultiBlock (Quad)	MultiBlock (Quad)	MultiBlock (Quad)	MultiBlock (Quad)	MultiBlock (Quad)
Enclosure material		MM 6208 (black)	Polyester	Polyester	Polyester	Polyester	Polyester
Mounting	Qty	2 mounting holes or with bracket accessory	5 mounting holes or with bracket accessory	5 mounting holes or with bracket accessory	5 mounting holes or with bracket accessory	5 mounting holes or with bracket accessory	5 mounting holes or with bracket accessory
Ambient Conditions, Mechanical							
Protection type	Type	IP69K	IP69K	IP69K	IP69K	IP69K	IP69K
EN/IEC 60529	Type	IP6X / IPX7	IP6X / IPX7	IP6X / IPX7	IP6X / IPX7	IP6X / IPX7	IP6X / IPX7
UL Type		1	1	1	1	1	1
Vibrations							
Displacement 3.5 mm	Hz	5–8.4	5–8.4	5–8.4	5–8.4	5–8.4	5–8.4
Acceleration 1 g	Hz	8.4–150	8.4–150	8.4–150	8.4–150	8.4–150	8.4–150
Shock IEC 60068-2-27 1/2 sine 30 g/11 ms	Impacts	9	9	9	9	9	9
Drop to	Height, mm	50	50	50	50	50	50
Drop freefall	m	0.3	0.3	0.3	0.3	0.3	0.3
EMC							
Overvoltage category		II	II	II	II	II	II
Pollution degree		3	3	3	3	3	3
Electrostatic discharge		Performance Criterion B	Performance Criterion B	Performance Criterion B	Performance Criterion B	Performance Criterion B	Performance Criterion B
Air discharge (level 3)	kV	8	8	8	8	8	8
Contact discharge (level 2)	kV	4	4	4	4	4	4
Electromagnetic fields		Performance Criterion A	Performance Criterion A	Performance Criterion A	Performance Criterion A	Performance Criterion A	Performance Criterion A
80–1000 MHz	V/m	10	10	10	10	10	10
1.4–2 G	V/m	3	3	3	3	3	3
2–2.7 G	V/m	1	1	1	1	1	1
Radio interference suppression (SmartWire-DT) (emission and conducted interface voltage)	EN 55011	Class A	Class A	Class A	Class A	Class A	Class A
Burst (level 3)		Performance Criterion B	Performance Criterion B	Performance Criterion B	Performance Criterion B	Performance Criterion B	Performance Criterion B
Supply cables	kV	2	2	2	2	2	2
Signal cables	kV	1	1	1	1	1	1
SmartWire-DT cables	kV	2	1	1	1	1	1
Surge (level 1)		Performance Criterion B	Performance Criterion B	Performance Criterion B	Performance Criterion B	Performance Criterion B	Performance Criterion B
Supply cables	kV	0.5	0.5	0.5	0.5	0.5	0.5
I/O cables	kV	1	1	1	1	1	1
SmartWire-DT cables	kV	1	1	1	1	1	1
Radiated RFI (level 3) (150 kHz – 80 MHz)		Performance Criterion A	Performance Criterion A	Performance Criterion A	Performance Criterion A	Performance Criterion A	Performance Criterion A
Supply cables	V	10	10	10	10	10	10
I/O cables	V	10	10	10	10	10	10
SmartWire-DT cables	V	10	10	10	10	10	10
Voltage drops & interrupts	mS	10	10	10	10	10	10
Climatic Environmental Conditions							
Ambient temperature	Degrees C	–25 to +70	–25 to +70	–25 to +70	–25 to +70	–25 to +70	–25 to +70
Storage temperature	Degrees C	–40 to +70	–40 to +70	–40 to +70	–40 to +70	–40 to +70	–40 to +70
Humidity	% RH	95 at 55 °C / 5–95 condensation permitted	95 at 55 °C / 5–95 condensation permitted	95 at 55 °C / 5–95 condensation permitted	95 at 55 °C / 5–95 condensation permitted	95 at 55 °C / 5–95 condensation permitted	95 at 55 °C / 5–95 condensation permitted

Machine Mount I/O Modules, continued

Description	Unit	EU2E-SWD-2PT	EU6E-SWD-4DX	EU6E-SWD-4XD-1	EU6E-SWD-4XD-2	EU6E-SWD-2D2D-1	EU6E-SWD-2D2D-2
SmartWire-DT Network							
Stations type		SmartWire-DT slave	SmartWire-DT slave	SmartWire-DT slave	SmartWire-DT slave	SmartWire-DT slave	SmartWire-DT slave
Baud rate setting		Automatic	Automatic	Automatic	Automatic	Automatic	Automatic
Maximum	Bit/sec	2 M	2 M	2 M	2 M	2 M	2 M
SW-DT Status LED		Green (625 nm)	Green (625 nm)	Green (625 nm)	Green (625 nm)	Green (625 nm)	Green (625 nm)
Connectors, (IEC-61076-2-101)	M12 A Coding	—	—	—	—	—	—
SW-DT network input connector		M12-M 5-pole	M12-M 5-pole	M12-M 5-pole	M12-M 5-pole	M12-M 5-pole	M12-M 5-pole
Pin 1		24 Vdc	24 Vdc	24 Vdc	24 Vdc	24 Vdc	24 Vdc
Pin 2		Data A	Data A	Data A	Data A	Data A	Data A
Pin 3		GND	GND	GND	GND	GND	GND
Pin 4		Data B	Data B	Data B	Data B	Data B	Data B
Pin 5		SEL (IN)	SEL (IN)	SEL (IN)	SEL (IN)	SEL (IN)	SEL (IN)
SW-DT network output connector		M12-F 5-pole	M12-F 5-pole	M12-F 5-pole	M12-F 5-pole	M12-F 5-pole	M12-F 5-pole
Pin 1		24 Vdc	24 Vdc	24 Vdc	24 Vdc	24 Vdc	24 Vdc
Pin 2		Data A	Data A	Data A	Data A	Data A	Data A
Pin 3		GND	GND	GND	GND	GND	GND
Pin 4		Data B	Data B	Data B	Data B	Data B	Data B
Pin 5		SEL (OUT)	SEL (OUT)	SEL (OUT)	SEL (OUT)	SEL (OUT)	SEL (OUT)
24 Vdc Power							
SWD-T bus 24 Vdc							
Rated operational voltage	V/U_e	24 V –15% +20%	24 V –15% +20%	24 V –15% +20%	24 V –15% +20%	24 V –15% +20%	24 V –15% +20%
Residual ripple on the input voltage	%	≤5	≤5	≤5	≤5	≤5	≤5
Reverse Polarity Protection		Yes	Yes	Yes	Yes	Yes	Yes
Rated supply current	mA	37	—	—	—		
Actuator external 24 Vdc							
Rated operational voltage	V/U_e	—	—	24 V	24 V	24 V	24 V
Reverse polarity protection		—	—	Yes	Yes	Yes	Yes
Maximum Current (total)	A	—	—	8	8	8	8
Connectors		—	—	7/8 in mini	7/8 in mini	7/8 in mini	7/8 in mini
Power in	Male	—	—	Male, 4-pole	Male, 4-pole	Male, 4-pole	Male, 4-pole
Pin 1	Std len	—	—	24 Vdc	24 Vdc	24 Vdc	24 Vdc
Pin 2	Std len	—	—	24 Vdc	24 Vdc	24 Vdc	24 Vdc
Pin 3	Std len	—	—	GND	GND	GND	GND
Pin 4	Ext len	—	—	GND	GND	GND	GND
Power out	Female	—	—	Female, 4-pole	Female, 4-pole	Female, 4-pole	Female, 4-pole
Pin 1		—	—	24 Vdc	24 Vdc	24 Vdc	24 Vdc
Pin 2		—	—	24 Vdc	24 Vdc	24 Vdc	24 Vdc
Pin 3		—	—	GND	GND	GND	GND
Pin 4		—	—	GND	GND	GND	GND
Power indication LED	Power in	—	—	Green (625 nm)	Green (625 nm)	Green (625 nm)	Green (625 nm)
Digital Inputs							
Input current	mA	—	Nominal 4 at 24 Vdc	—	—	Nominal 4 at 24 Vdc	Nominal 4 at 24 Vdc
Voltage level to (IEC / EN 61131-2)		—		—	—		
Limit value type 1		—	L < 5 Vdc; H > 15 Vdc	—	—	L < 5 Vdc; H > 15 Vdc	L < 5 Vdc; H > 15 Vdc
Input delay		—	H->L or L->H < 0.2 ms	—	—	H->L or L->H < 0.2 ms	H->L or L->H < 0.2 ms
Status display	LED	—	Yellow	—	—	Yellow	Yellow

Machine Mount I/O Modules, continued

Description	Unit	EU2E-SWD-2PT	EU6E-SWD-4DX	EU6E-SWD-4XD-1	EU6E-SWD-4XD-2	EU6E-SWD-2D2D-1	EU6E-SWD-2D2D-2
Digital Outputs							
Output driver circuit power source	Bus/ext	—	—	External	External	External	External
Output current	A	—	—	0.5 at 24 Vdc	2 at 24 Vdc	0.5 at 24 Vdc	2 at 24 Vdc
Trip current SC	A	—	—	1.2 over 3 ms	1.2 over 3 ms	1.2 over 3 ms	1.2 over 3 ms
Lamp load	W	—	—	≤3	≤3	≤3	≤3
Overload proof (IEC / EN 61131-2)		—	—	Yes w/diag	Yes w/diag	Yes w/diag	Yes w/diag
Switching capacity IEC 60947-5-1		—	—	DC-13	DC-13	DC-13	DC-13
Status display	LED	—	—	Yellow	Yellow	Yellow	Yellow
Total current all outputs	A	—	—	2	8	1	4
Analog							
Parameter setting							
Refresh rate	mS	—	—	—	—	—	—
Averaging (5 msec sample interval)	ON/OFF	—	—	—	—	—	—
Voltage							
Input voltage	V	—	—	—	—	—	—
Input impedance	kohm	—	—	—	—	—	—
Output voltage	V	—	—	—	—	—	—
Maximum output current	mA	—	—	—	—	—	—
Source impedance	kohm	—	—	—	—	—	—
Current							
Input current	mA	—	—	—	—	—	—
Input impedance	ohms	—	—	—	—	—	—
Output current	mA	—	—	—	—	—	—
Source impedance	ohms	—	—	—	—	—	—
Converter							
Resolution	Bit	—	—	—	—	—	—
Conversion time	ms	—	—	—	—	—	—
Cumulative error	%	—	—	—	—	—	—
Repetition accuracy	%	—	—	—	—	—	—
Encoder							
Frequency response	Hz	—	—	—	—	—	—
Status indication LED							
Count pulse		—	—	—	—	—	—
Encoder status (input byte 0)	Bit	—	—	—	—	—	—
Referencing active status	0	—	—	—	—	—	—
Reference status	1	—	—	—	—	—	—
Reference line state	2	—	—	—	—	—	—
Zero crossing	3	—	—	—	—	—	—
Control settings (output byte 0)	Bit	—	—	—	—	—	—
Count control	0	—	—	—	—	—	—
Reference enable (ActRef)	1	—	—	—	—	—	—
Reference control	2	—	—	—	—	—	—
Asynchronous reset	3	—	—	—	—	—	—
Zero crossing acknowledge	4	—	—	—	—	—	—

Machine Mount I/O Modules, continued

Description	Unit	EU2E-SWD-2PT	EU6E-SWD-4DX	EU6E-SWD-4XD-1	EU6E-SWD-4XD-2	EU6E-SWD-2D2D-1	EU6E-SWD-2D2D-2
Temperature							
Parameter setting							
Temperature sensor		PT100, PT1000,Ni1000	—	—	—	—	—
Averaging		Adjustable	—	—	—	—	—
Range		Selectable (1 of 2)	—	—	—	—	—
Temperature range							
PT100 (1)	°C	–50 to +200	—	—	—	—	—
PT1000 (1)	°C	–50 to +200	—	—	—	—	—
Ni1000 (1)	°C	–50 to +200	—	—	—	—	—
PT100 (2)	°C	–100 to +400	—	—	—	—	—
PT1000 (2)	°C	–100 to +400	—	—	—	—	—
Ni1000 (2)	°C	–100 to +400	—	—	—	—	—
Converter							
Resolution (converter)	Bit	12	—	—	—	—	—
Conversion time	ms	250	—	—	—	—	—
Cumulative error	%	±1.0	—	—	—	—	—
Repetition accuracy	%	±0.5	—	—	—	—	—
Display		°C, °F, raw value	—	—	—	—	—
Resolution (temperature)	°C	0.1	—	—	—	—	—
I/O Configurations							
24 Vdc bus power to I/O devices	Y/N	No	Yes	Yes	Yes	Yes	Yes
Galvanic isolation of I/O circuitry	Y/N	No	No	No	No	No	No
Operating power per connection	A	N/A	0.3	0.3	0.3	0.3	0.3
Internally power limited (PTC)	Y/N	No	Yes	Yes	Yes	Yes	Yes
Overload threshold per connection	A	N/A	0.6	0.6	0.6	0.6	0.6
Overload recovery time	S	N/A	0.6	0.6	0.6	0.6	0.6
Maximum allowed total current	A	N/A	4	4	4	4	4
I/O types							
Configurable (digital I/O)	I/O point	—	—	—	—	—	—
Digital IN (sinking)	I/O point	—	4	—	—	2	2
Digital OUT (sourcing)	I/O point	—	—	4	4	2	2
Analog IN	I/O point	—	—	—	—	—	—
Analog OUT	I/O point	—	—	—	—	—	—
Encoder IN	I/O point	—	—	—	—	—	—
Temperature sensor input	I/O point	2x 2 / 3 wire	—	—	—	—	—
I/O connectors, (IEC-61076-2-101)	M12 A Coding	2x M12-F / 5-pole	4x M12-F / 5-pole	4x M12-F / 5-pole	4x M12-F / 5-pole	4x M12-F / 5-pole	4x M12-F / 5-pole
Active circuits loaded in connector	Circuits	5	3	3	3	3	3

Machine Mount I/O Modules, continued

Description	Unit	EU2E-SWD-2PT	EU6E-SWD-4DX	EU6E-SWD-4XD-1	EU6E-SWD-4XD-2	EU6E-SWD-2D2D-1	EU6E-SWD-2D2D-2
I/O Configurations, continued							
I/O connector pin outs							
I/O Connector–1							
Pin 1		SWD Active Cap Detect	24 Vdc	24 Vdc	24 Vdc	24 Vdc	24 Vdc
Pin 2		T1b	N/C	N/C	N/C	N/C	N/C
Pin 3		GND	GND	GND	GND	GND	GND
Pin 4		T1a	In Ch 0	Out Ch 0	Out Ch 0	Out Ch 0	Out Ch 0
Pin 5		T1	N/C	N/C	N/C	N/C	N/C
Pin 6		—	—	—	—	—	—
Pin 7		—	—	—	—	—	—
Pin 8		—	—	—	—	—	—
I/O Connector–2							
Pin 1		SWD Active Cap Detect	24 Vdc	24 Vdc	24 Vdc	24 Vdc	24 Vdc
Pin 2		T2b	N/C	N/C	N/C	N/C	N/C
Pin 3		GND	GND	GND	GND	GND	GND
Pin 4		T2a	In Ch 2	Out Ch 2	Out Ch 2	Out Ch 2	Out Ch 2
Pin 5		T2	N/C	N/C	N/C	N/C	N/C
I/O Connector–3							
Pin 1		—	24 Vdc	24 Vdc	24 Vdc	24 Vdc	24 Vdc
Pin 2		—	N/C	N/C	N/C	N/C	N/C
Pin 3		—	GND	GND	GND	GND	GND
Pin 4		—	In Ch 4	Out Ch 4	Out Ch 4	In Ch 4	In Ch 4
Pin 5		—	N/C	N/C	N/C	N/C	N/C
I/O Connector–4							
Pin 1		—	24 Vdc	24 Vdc	24 Vdc	24 Vdc	24 Vdc
Pin 2		—	N/C	N/C	N/C	N/C	N/C
Pin 3		—	GND	GND	GND	GND	GND
Pin 4		—	In Ch 6	Out Ch 6	Out Ch 6	In Ch 6	In Ch 6
Pin 5		—	N/C	N/C	N/C	N/C	N/C
I/O Connector–5							
Pin 1		—	—	—	—	—	—
Pin 2		—	—	—	—	—	—
Pin 3		—	—	—	—	—	—
Pin 4		—	—	—	—	—	—
Pin 5		—	—	—	—	—	—
I/O Connector–6							
Pin 1		—	—	—	—	—	—
Pin 2		—	—	—	—	—	—
Pin 3		—	—	—	—	—	—
Pin 4		—	—	—	—	—	—
Pin 5		—	—	—	—	—	—
I/O Connector–7							
Pin 1		—	—	—	—	—	—
Pin 2		—	—	—	—	—	—
Pin 3		—	—	—	—	—	—
Pin 4		—	—	—	—	—	—
Pin 5		—	—	—	—	—	—
I/O Connector–8							
Pin 1		—	—	—	—	—	—
Pin 2		—	—	—	—	—	—
Pin 3		—	—	—	—	—	—
Pin 4		—	—	—	—	—	—
Pin 5		—	—	—	—	—	—

Machine Mount I/O Modules, continued

Description	Unit	EU6E-SWD-4D4D-1	EU6E-SWD-4D4D-2	EU6E-SWD-8DX	EU6E-SWD-8XD-1	EU6E-SWD-8DD	EU8E-SWD-8XD-1
General							
Standards		IEC / EN 61131-2, EN50178, IEC / EN 60529					
Dimensions (W x H x L)—reference only	mm	60 x 20 x As Req	60 x 20 x As Req	60 x 20 x As Req	60 x 20 x As Req	60 x 20 x As Req	60 x 20 x As Req
Weight	g / oz	267 / 9.4	267 / 9.4	234 / 8.3	267 / 9.4	234 / 8.3	369 / 13.0
Form factor		MultiBlock (Quad)	MultiBlock (Quad)	MultiBlock (Quad)	MultiBlock (Quad)	MultiBlock (Quad)	MultiBlock (Octal)
Enclosure material		Polyester	Polyester	Polyester	Polyester	Polyester	Polyester
Mounting	Qty	5 mounting holes or with bracket accessory	5 mounting holes or with bracket accessory	5 mounting holes or with bracket accessory	5 mounting holes or with bracket accessory	5 mounting holes or with bracket accessory	5 mounting holes or with bracket accessory
Ambient Conditions, Mechanical							
Protection type	Type	IP69K	IP69K	IP69K	IP69K	IP69K	IP69K
EN/IEC 60529	Type	IP6X / IPX7	IP6X / IPX7	IP6X / IPX7	IP6X / IPX7	IP6X / IPX7	IP6X / IPX7
UL Type		1	1	1	1	1	1
Vibrations							
Displacement 3.5 mm	Hz	5–8.4	5–8.4	5–8.4	5–8.4	5–8.4	5–8.4
Acceleration 1 g	Hz	8.4–150	8.4–150	8.4–150	8.4–150	8.4–150	8.4–150
Shock IEC 60068-2-27 1/2 sine 30 g/11 ms	Impacts	9	9	9	9	9	9
Drop to	Height, mm	50	50	50	50	50	50
Drop freefall	m	0.3	0.3	0.3	0.3	0.3	0.3
EMC							
Overvoltage category		II	II	II	II	II	II
Pollution degree		3	3	3	3	3	3
Electrostatic discharge		Performance Criterion B	Performance Criterion B	Performance Criterion B	Performance Criterion B	Performance Criterion B	Performance Criterion B
Air discharge (level 3)	kV	8	8	8	8	8	8
Contact discharge (level 2)	kV	4	4	4	4	4	4
Electromagnetic fields		Performance Criterion A	Performance Criterion A	Performance Criterion A	Performance Criterion A	Performance Criterion A	Performance Criterion A
80–1000 MHz	V/m	10	10	10	10	10	10
1.4–2 G	V/m	3	3	3	3	3	3
2–2.7 G	V/m	1	1	1	1	1	1
Radio interference suppression (SmartWire-DT) (emission and conducted interface voltage)	EN 55011	Class A	Class A	Class A	Class A	Class A	Class A
Burst (level 3)		Performance Criterion B	Performance Criterion B	Performance Criterion B	Performance Criterion B	Performance Criterion B	Performance Criterion B
Supply cables	kV	2	2	2	2	2	2
Signal cables	kV	1	1	1	1	1	1
SmartWire-DT cables	kV	1	1	1	1	1	1
Surge (level 1)		Performance Criterion B	Performance Criterion B	Performance Criterion B	Performance Criterion B	Performance Criterion B	Performance Criterion B
Supply cables	kV	0.5	0.5	0.5	0.5	0.5	0.5
I/O cables	kV	1	1	1	1	1	1
SmartWire-DT cables	kV	1	1	1	1	1	1
Radiated RFI (level 3) (150 kHz – 80 MHz)		Performance Criterion A	Performance Criterion A	Performance Criterion A	Performance Criterion A	Performance Criterion A	Performance Criterion A
Supply cables	V	10	10	10	10	10	10
I/O cables	V	10	10	10	10	10	10
SmartWire-DT cables	V	10	10	10	10	10	10
Voltage drops & interrupts	mS	10	10	10	10	10	10
Climatic Environmental Conditions							
Ambient temperature	Degrees C	–25 to +70	–25 to +70	–25 to +70	–25 to +70	–25 to +70	–25 to +70
Storage temperature	Degrees C	–40 to +70	–40 to +70	–40 to +70	–40 to +70	–40 to +70	–40 to +70
Humidity	% RH	95 at 55 °C / 5–95 condensation permitted	95 at 55 °C / 5–95 condensation permitted	95 at 55 °C / 5–95 condensation permitted	95 at 55 °C / 5–95 condensation permitted	95 at 55 °C / 5–95 condensation permitted	95 at 55 °C / 5–95 condensation permitted

Machine Mount I/O Modules, continued

Description	Unit	EU6E-SWD-4D4D-1	EU6E-SWD-4D4D-2	EU6E-SWD-8DX	EU6E-SWD-8XD-1	EU6E-SWD-8DD	EU8E-SWD-8XD-1
SmartWire-DT Network							
Stations type		SmartWire-DT slave	SmartWire-DT slave	SmartWire-DT slave	SmartWire-DT slave	SmartWire-DT slave	SmartWire-DT slave
Baud rate setting		Automatic	Automatic	Automatic	Automatic	Automatic	Automatic
Maximum	Bit/sec	2 M	2 M	2 M	2 M	2 M	2 M
SW-DT Status LED		Green (625 nm)	Green (625 nm)	Green (625 nm)	Green (625 nm)	Green (625 nm)	Green (625 nm)
Connectors, (IEC-61076-2-101)	M12 A Coding	—	—	—	—	—	—
SW-DT network input connector		M12-M 5-pole	M12-M 5-pole	M12-M 5-pole	M12-M 5-pole	M12-M 5-pole	M12-M 5-pole
Pin 1		24 Vdc	24 Vdc	24 Vdc	24 Vdc	24 Vdc	24 Vdc
Pin 2		Data A	Data A	Data A	Data A	Data A	Data A
Pin 3		GND	GND	GND	GND	GND	GND
Pin 4		Data B	Data B	Data B	Data B	Data B	Data B
Pin 5		SEL (IN)	SEL (IN)	SEL (IN)	SEL (IN)	SEL (IN)	SEL (IN)
SW-DT network output connector		M12-F 5-pole	M12-F 5-pole	M12-F 5-pole	M12-F 5-pole	M12-F 5-pole	M12-F 5-pole
Pin 1		24 Vdc	24 Vdc	24 Vdc	24 Vdc	24 Vdc	24 Vdc
Pin 2		Data A	Data A	Data A	Data A	Data A	Data A
Pin 3		GND	GND	GND	GND	GND	GND
Pin 4		Data B	Data B	Data B	Data B	Data B	Data B
Pin 5		SEL (OUT)	SEL (OUT)	SEL (OUT)	SEL (OUT)	SEL (OUT)	SEL (OUT)
24 Vdc Power							
SWD-T Bus 24 Vdc							
Rated operational voltage	V/U_e	24 V –15% +20%	24 V –15% +20%	24 V –15% +20%	24 V –15% +20%	24 V –15% +20%	24 V –15% +20%
Residual ripple on the input voltage	%	≤5	≤5	≤5	≤5	≤5	≤5
Reverse Polarity Protection		Yes	Yes	Yes	Yes	Yes	Yes
Rated supply current	mA			—	—	—	—
Actuator external 24 Vdc							
Rated operational voltage	V/U_e	24 V	24 V	—	24 V	—	24 V
Reverse polarity protection		Yes	Yes	—	Yes	—	Yes
Maximum Current (total)	A	8	8	—	8	—	8
Connectors		7/8 in mini	7/8 in mini	—	7/8 in mini	—	7/8 in mini
Power in	Male	Male, 4-pole	Male, 4-pole	—	Male, 4-pole	—	Male, 4-pole
Pin 1	Std len	24 Vdc	24 Vdc	—	24 Vdc	—	24 Vdc
Pin 2	Std len	24 Vdc	24 Vdc	—	24 Vdc	—	24 Vdc
Pin 3	Std len	GND	GND	—	GND	—	GND
Pin 4	Ext len	GND	GND	—	GND	—	GND
Power out	Female	Female, 4-pole	Female, 4-pole	—	Female, 4-pole	—	Female, 4-pole
Pin 1		24 Vdc	24 Vdc	—	24 Vdc	—	24 Vdc
Pin 2		24 Vdc	24 Vdc	—	24 Vdc	—	24 Vdc
Pin 3		GND	GND	—	GND	—	GND
Pin 4		GND	GND	—	GND	—	GND
Power indication LED	Power in	Green (625 nm)	Green (625 nm)	—	Green (625 nm)	—	Green (625 nm)
Digital Inputs							
Input current	mA	Nominal 4 at 24 Vdc	Nominal 4 at 24 Vdc	Nominal 4 at 24 Vdc	—	Nominal 4 at 24 Vdc	—
Voltage level to (IEC / EN 61131-2)							
Limit value type 1		L < 5 Vdc; H > 15 Vdc	L < 5 Vdc; H > 15 Vdc	L < 5 Vdc; H > 15 Vdc	—	L < 5 Vdc; H > 15 Vdc	—
Input delay		H->L or L->H < 0.2 ms	H->L or L->H < 0.2 ms	H->L or L->H < 0.2 ms	—	H->L or L->H < 0.2 ms	—
Status display	LED	Yellow	Yellow	Yellow	—	Yellow	—

Machine Mount I/O Modules, continued

Description	Unit	EU6E-SWD-4D4D-1	EU6E-SWD-4D4D-2	EU6E-SWD-8DX	EU6E-SWD-8XD-1	EU6E-SWD-8DD	EU8E-SWD-8XD-1
Digital Outputs							
Output driver circuit power source	Bus/ext	External	External	—	External	Bus	External
Output current	A	0.5 at 24 Vdc	2 at 24 Vdc	—	0.5 at 24 Vdc	0.5 at 24 Vdc	0.5 at 24 Vdc
Trip current SC	A	1.2 over 3 ms	1.2 over 3 ms	—	1.2 over 3 ms	1.2 over 3 ms	1.2 over 3 ms
Lamp load	W	≤3	≤3	—	≤3	≤3	≤3
Overload proof (IEC / EN 61131-2)		Yes w/diag	Yes w/diag	—	Yes w/diag	Yes w/diag	Yes w/diag
Switching capacity IEC 60947-5-1		DC-13	DC-13	—	DC-13	DC-13	DC-13
Status display	LED	Yellow	Yellow	—	Yellow	Yellow	Yellow
Total current all outputs	A	2	8	—	4	4	4
Analog							
Parameter setting							
Refresh rate	mS	—	—	—	—	—	—
Averaging (5 msec sample interval)	ON/OFF	—	—	—	—	—	—
Voltage							
Input voltage	V	—	—	—	—	—	—
Input impedance	kohm	—	—	—	—	—	—
Output voltage	V	—	—	—	—	—	—
Maximum output current	mA	—	—	—	—	—	—
Source impedance	kohm	—	—	—	—	—	—
Current							
Input current	mA	—	—	—	—	—	—
Input impedance	ohms	—	—	—	—	—	—
Output current	mA	—	—	—	—	—	—
Source impedance	ohms	—	—	—	—	—	—
Converter							
Resolution	Bit	—	—	—	—	—	—
Conversion time	ms	—	—	—	—	—	—
Cumulative error	%	—	—	—	—	—	—
Repetition accuracy	%	—	—	—	—	—	—
Encoder							
Frequency response	Hz	—	—	—	—	—	—
Status indication LED							
Count pulse		—	—	—	—	—	—
Encoder status (input byte 0)	Bit	—	—	—	—	—	—
Referencing active status	0	—	—	—	—	—	—
Reference status	1	—	—	—	—	—	—
Reference line state	2	—	—	—	—	—	—
Zero crossing	3	—	—	—	—	—	—
Control settings (output byte 0)	Bit	—	—	—	—	—	—
Count control	0	—	—	—	—	—	—
Reference enable (ActRef)	1	—	—	—	—	—	—
Reference control	2	—	—	—	—	—	—
Asynchronous reset	3	—	—	—	—	—	—
Zero crossing acknowledge	4	—	—	—	—	—	—

Machine Mount I/O Modules, continued

Description	Unit	EU6E-SWD-4D4D-1	EU6E-SWD-4D4D-2	EU6E-SWD-8DX	EU6E-SWD-8XD-1	EU6E-SWD-8DD	EU8E-SWD-8XD-1
Temperature							
Parameter setting							
Temperature sensor		—	—	—	—	—	—
Averaging		—	—	—	—	—	—
Range		—	—	—	—	—	—
Temperature range							
PT100 (1)	°C	—	—	—	—	—	—
PT1000 (1)	°C	—	—	—	—	—	—
Ni1000 (1)	°C	—	—	—	—	—	—
PT100 (2)	°C	—	—	—	—	—	—
PT1000 (2)	°C	—	—	—	—	—	—
Ni1000 (2)	°C	—	—	—	—	—	—
Converter							
Resolution (converter)	Bit	—	—	—	—	—	—
Conversion time	ms	—	—	—	—	—	—
Cumulative error	%	—	—	—	—	—	—
Repetition accuracy	%	—	—	—	—	—	—
Display		—	—	—	—	—	—
Resolution (temperature)	°C	—	—	—	—	—	—
I/O Configurations							
24 Vdc bus power to I/O devices	Y/N	Yes	Yes	Yes	Yes	Yes	Yes
Galvanic isolation of I/O circuitry	Y/N	No	No	No	No	No	No
Operating power per connection	A	0.3	0.3	0.3	0.3	0.3	0.3
Internally power limited (PTC)	Y/N	Yes	Yes	Yes	Yes	Yes	Yes
Overload threshold per connection	A	0.6	0.6	0.6	0.6	0.6	0.6
Overload recovery time	S	0.6	0.6	0.6	0.6	0.6	0.6
Maximum allowed total current	A	4	8	4	4	4	4
I/O types							
Configurable (digital I/O)	I/O point	—	—	—	—	8	—
Digital IN (sinking)	I/O point	4	4	8	—	Up to 8	—
Digital OUT (sourcing)	I/O point	4	4	—	8	Up to 8	8
Analog IN	I/O point	—	—	—	—	—	—
Analog OUT	I/O point	—	—	—	—	—	—
Encoder IN	I/O point	—	—	—	—	—	—
Temperature sensor input	I/O point	—	—	—	—	—	—
I/O connectors, (IEC-61076-2-101)	M12 A Coding	4x M12-F / 5-pole	4x M12-F / 5-pole	4x M12-F / 5-pole	4x M12-F / 5-pole	4x M12-F / 5-pole	8x M12-F / 5-pole
Active circuits loaded in connector	Circuits	4	4	4	4	4	3

Machine Mount I/O Modules, continued

Description	Unit	EU6E-SWD-4D4D-1	EU6E-SWD-4D4D-2	EU6E-SWD-8DX	EU6E-SWD-8XD-1	EU6E-SWD-8DD	EU8E-SWD-8XD-1
I/O Configurations, continued							
I/O connector pin outs							
I/O Connector–1							
Pin 1		24 Vdc	24 Vdc	24 Vdc	24 Vdc	24 Vdc	24 Vdc
Pin 2		Out Ch 1	Out Ch 1	In Ch 1	Out Ch 1	I/O Ch 1	N/C
Pin 3		GND	GND	GND	GND	GND	GND
Pin 4		Out Ch 0	Out Ch 0	In Ch 0	Out Ch 0	I/O Ch 0	Out Ch 0
Pin 5		N/C	N/C	N/C	N/C	N/C	N/C
Pin 6		—	—	—	—	—	—
Pin 7		—	—	—	—	—	—
Pin 8		—	—	—	—	—	—
I/O Connector–2							
Pin 1		24 Vdc	24 Vdc	24 Vdc	24 Vdc	24 Vdc	24 Vdc
Pin 2		Out Ch 3	Out Ch 3	In Ch 3	Out Ch 3	I/O Ch 3	N/C
Pin 3		GND	GND	GND	GND	GND	GND
Pin 4		Out Ch 2	Out Ch 2	In Ch 2	Out Ch 2	I/O Ch 2	Out Ch 2
Pin 5		N/C	N/C	N/C	N/C	N/C	N/C
I/O Connector–3							
Pin 1		24 Vdc	24 Vdc	24 Vdc	24 Vdc	24 Vdc	24 Vdc
Pin 2		In Ch 5	In Ch 5	In Ch 5	Out Ch 5	I/O Ch 5	N/C
Pin 3		GND	GND	GND	GND	GND	GND
Pin 4		In Ch 4	In Ch 4	In Ch 4	Out Ch 4	I/O Ch 4	Out Ch 4
Pin 5		N/C	N/C	N/C	N/C	N/C	N/C
I/O Connector–4							
Pin 1		24 Vdc	24 Vdc	24 Vdc	24 Vdc	24 Vdc	24 Vdc
Pin 2		In Ch 7	In Ch 7	In Ch 7	Out Ch 7	I/O Ch 7	N/C
Pin 3		GND	GND	GND	GND	GND	GND
Pin 4		In Ch 6	In Ch 6	In Ch 6	Out Ch 6	I/O Ch 6	Out Ch 6
Pin 5		N/C	N/C	N/C	N/C	N/C	N/C
I/O Connector–5							
Pin 1		—	—	—	—	—	24 Vdc
Pin 2		—	—	—	—	—	N/C
Pin 3		—	—	—	—	—	GND
Pin 4		—	—	—	—	—	Out Ch 8
Pin 5		—	—	—	—	—	N/C
I/O Connector–6							
Pin 1		—	—	—	—	—	24 Vdc
Pin 2		—	—	—	—	—	N/C
Pin 3		—	—	—	—	—	GND
Pin 4		—	—	—	—	—	Out Ch 10
Pin 5		—	—	—	—	—	N/C
I/O Connector–7							
Pin 1		—	—	—	—	—	24 Vdc
Pin 2		—	—	—	—	—	N/C
Pin 3		—	—	—	—	—	GND
Pin 4		—	—	—	—	—	Out Ch 12
Pin 5		—	—	—	—	—	N/C
I/O Connector–8							
Pin 1		—	—	—	—	—	24 Vdc
Pin 2		—	—	—	—	—	N/C
Pin 3		—	—	—	—	—	GND
Pin 4		—	—	—	—	—	Out Ch 14
Pin 5		—	—	—	—	—	N/C

Machine Mount I/O Modules, continued

Description	Unit	EU8E-SWD-4D4D-1	EU8E-SWD-8D8D-1	EU8E-SWD-16DX	EU8E-SWD-16XD-1	EU8E-SWD-16DD	EU1M-SWD-NOP
General							
Standards				IEC / EN 61131-2, EN50178, IEC / EN 60529			
Dimensions (W x H x L)—reference only	mm	60 x 20 x As Req	60 x 20 x As Req	60 x 20 x As Req	60 x 20 x As Req	60 x 20 x As Req	41 x 20 x 59
Weight	g / oz	369 / 13.0	369 / 13.0	335 / 11.8	369 / 13.0	335 / 11.8	65 / 2.3
Form factor		MultiBlock (Octal)	MultiBlock (Octal)	MultiBlock (Octal)	MultiBlock (Octal)	MultiBlock (Octal)	Single-T
Enclosure material		Polyester	Polyester	Polyester	Polyester	Polyester	MM 6208 (black)
Mounting	Qty	5 mounting holes or with bracket accessory	5 mounting holes or with bracket accessory	5 mounting holes or with bracket accessory	5 mounting holes or with bracket accessory	5 mounting holes or with bracket accessory	2 mounting holes or with bracket accessory
Ambient Conditions, Mechanical							
Protection type	Type	IP69K	IP69K	IP69K	IP69K	IP69K	IP69K
EN/IEC 60529	Type	IP6X / IPX7	IP6X / IPX7	IP6X / IPX7	IP6X / IPX7	IP6X / IPX7	IP6X / IPX7
UL Type		1	1	1	1	1	1
Vibrations							
Displacement 3.5 mm	Hz	5–8.4	5–8.4	5–8.4	5–8.4	5–8.4	5–8.4
Acceleration 1 g	Hz	8.4–150	8.4–150	8.4–150	8.4–150	8.4–150	8.4–150
Shock IEC 60068-2-27 1/2 sine 30 g/11 ms	Impacts	9	9	9	9	9	9
Drop to	Height, mm	50	50	50	50	50	50
Drop freefall	m	0.3	0.3	0.3	0.3	0.3	0.3
EMC							
Overvoltage category		II	II	II	II	II	II
Pollution degree		3	3	3	3	3	3
Electrostatic discharge		Performance Criterion B	Performance Criterion B	Performance Criterion B	Performance Criterion B	Performance Criterion B	Performance Criterion B
Air discharge (level 3)	kV	8	8	8	8	8	8
Contact discharge (level 2)	kV	4	4	4	4	4	4
Electromagnetic fields		Performance Criterion A	Performance Criterion A	Performance Criterion A	Performance Criterion A	Performance Criterion A	Performance Criterion A
80–1000 MHz	V/m	10	10	10	10	10	10
1.4–2 G	V/m	3	3	3	3	3	3
2–2.7 G	V/m	1	1	1	1	1	1
Radio interference suppression (SmartWire-DT) (emission and conducted interface voltage)	EN 55011	Class A	Class A	Class A	Class A	Class A	Class A
Burst (level 3)		Performance Criterion B	Performance Criterion B	Performance Criterion B	Performance Criterion B	Performance Criterion B	Performance Criterion B
Supply cables	kV	2	2	2	2	2	2
Signal cables	kV	1	1	1	1	1	1
SmartWire-DT cables	kV	1	1	1	1	1	1
Surge (level 1)		Performance Criterion B	Performance Criterion B	Performance Criterion B	Performance Criterion B	Performance Criterion B	Performance Criterion B
Supply cables	kV	0.5	0.5	0.5	0.5	0.5	0.5
I/O cables	kV	1	1	1	1	1	1
SmartWire-DT cables	kV	1	1	1	1	1	1
Radiated RFI (level 3) (150 kHz – 80 MHz)		Performance Criterion A	Performance Criterion A	Performance Criterion A	Performance Criterion A	Performance Criterion A	Performance Criterion A
Supply cables	V	10	10	10	10	10	10
I/O cables	V	10	10	10	10	10	10
SmartWire-DT cables	V	10	10	10	10	10	10
Voltage drops & interrupts	mS	10	10	10	10	10	10
Climatic Environmental Conditions							
Ambient temperature	Degrees C	–25 to +70	–25 to +70	–25 to +70	–25 to +70	–25 to +70	–25 to +70
Storage temperature	Degrees C	–40 to +70	–40 to +70	–40 to +70	–40 to +70	–40 to +70	–40 to +70
Humidity	% RH	95 at 55 °C / 5–95 condensation permitted	95 at 55 °C / 5–95 condensation permitted	95 at 55 °C / 5–95 condensation permitted	95 at 55 °C / 5–95 condensation permitted	95 at 55 °C / 5–95 condensation permitted	95 at 55 °C / 5–95 condensation permitted

Machine Mount I/O Modules, continued

Description	Unit	EU8E-SWD-4D4D-1	EU8E-SWD-8D8D-1	EU8E-SWD-16DX	EU8E-SWD-16XD-1	EU8E-SWD-16DD	EU1M-SWD-NOP
SmartWire-DT Network							
Stations type		SmartWire-DT slave	SmartWire-DT slave	SmartWire-DT slave	SmartWire-DT slave	SmartWire-DT slave	SmartWire-DT slave
Baud rate setting		Automatic	Automatic	Automatic	Automatic	Automatic	Automatic
Maximum	Bit/sec	2 M	2 M	2 M	2 M	2 M	2 M
SW-DT Status LED		Green (625 nm)	Green (625 nm)	Green (625 nm)	Green (625 nm)	Green (625 nm)	Green (625 nm)
Connectors, (IEC-61076-2-101)	M12 A Coding	—	—	—	—	—	—
SW-DT network input connector		M12-M 5-pole	M12-M 5-pole	M12-M 5-pole	M12-M 5-pole	M12-M 5-pole	M12-M 5-pole
Pin 1		24 Vdc	24 Vdc	24 Vdc	24 Vdc	24 Vdc	24 Vdc
Pin 2		Data A	Data A	Data A	Data A	Data A	Data A
Pin 3		GND	GND	GND	GND	GND	GND
Pin 4		Data B	Data B	Data B	Data B	Data B	Data B
Pin 5		SEL (IN)	SEL (IN)	SEL (IN)	SEL (IN)	SEL (IN)	SEL (IN)
SW-DT network output connector		M12-F 5-pole	M12-F 5-pole	M12-F 5-pole	M12-F 5-pole	M12-F 5-pole	M12-F 5-pole
Pin 1		24 Vdc	24 Vdc	24 Vdc	24 Vdc	24 Vdc	24 Vdc
Pin 2		Data A	Data A	Data A	Data A	Data A	Data A
Pin 3		GND	GND	GND	GND	GND	GND
Pin 4		Data B	Data B	Data B	Data B	Data B	Data B
Pin 5		SEL (OUT)	SEL (OUT)	SEL (OUT)	SEL (OUT)	SEL (OUT)	SEL (OUT)
24 Vdc Power							
SWD-T Bus 24 Vdc							
Rated operational voltage	V/U_e	24 V –15% +20%	24 V –15% +20%	24 V –15% +20%	24 V –15% +20%	24 V –15% +20%	24 V –15% +20%
Residual ripple on the input voltage	%	≤5	≤5	≤5	≤5	≤5	≤5
Reverse Polarity Protection		Yes	Yes	Yes	Yes	Yes	Yes
Rated supply current	mA	—	—	—	—	—	55
Actuator external 24 Vdc							
Rated operational voltage	V/U_e	24 V	24 V	—	24 V	—	—
Reverse polarity protection		Yes	Yes	—	Yes	—	—
Maximum Current (total)	A	8	8	—	8	—	—
Connectors		7/8 in mini	7/8 in mini	—	7/8 in mini	—	—
Power in	Male	Male, 4-pole	Male, 4-pole	—	Male, 4-pole	—	—
Pin 1	Std len	24 Vdc	24 Vdc	—	24 Vdc	—	—
Pin 2	Std len	24 Vdc	24 Vdc	—	24 Vdc	—	—
Pin 3	Std len	GND	GND	—	GND	—	—
Pin 4	Ext len	GND	GND	—	GND	—	—
Power out	Female	Female, 4-pole	Female, 4-pole	—	Female, 4-pole	—	—
Pin 1		24 Vdc	24 Vdc	—	24 Vdc	—	—
Pin 2		24 Vdc	24 Vdc	—	24 Vdc	—	—
Pin 3		GND	GND	—	GND	—	—
Pin 4		GND	GND	—	GND	—	—
Power indication LED	Power in	Green (625 nm)	Green (625 nm)	—	Green (625 nm)	—	—
Digital Inputs							
Input current	mA	Nominal 4 at 24 Vdc	Nominal 4 at 24 Vdc	Nominal 4 at 24 Vdc	—	Nominal 4 at 24 Vdc	—
Voltage level to (IEC / EN 61131-2)							
Limit value type 1		L < 5 Vdc; H > 15 Vdc	L < 5 Vdc; H > 15 Vdc	L < 5 Vdc; H > 15 Vdc	—	L < 5 Vdc; H > 15 Vdc	—
Input delay		H->L or L->H < 0.2 ms	H->L or L->H < 0.2 ms	H->L or L->H < 0.2 ms	—	H->L or L->H < 0.2 ms	—
Status display	LED	Yellow	Yellow	Yellow	—	Yellow	—

Machine Mount I/O Modules, continued

Description	Unit	EU8E-SWD-4D4D-1	EU8E-SWD-8D8D-1	EU8E-SWD-16DX	EU8E-SWD-16XD-1	EU8E-SWD-16DD	EU1M-SWD-NOP
Digital Outputs							
Output driver circuit power source	Bus/ext	External	External	—	External	Bus	—
Output current	A	0.5 at 24 Vdc	0.5 at 24 Vdc	—	0.5 at 24 Vdc	0.5 at 24 Vdc	—
Trip current SC	A	1.2 over 3 ms	1.2 over 3 ms	—	1.2 over 3 ms	1.2 over 3 ms	—
Lamp load	W	≤3	≤3	—	≤3	≤3	—
Overload proof (IEC / EN 61131-2)		Yes w/diag	Yes w/diag	—	Yes w/diag	Yes w/diag	—
Switching capacity IEC 60947-5-1		DC-13	DC-13	—	DC-13	DC-13	—
Status display	LED	Yellow	Yellow	—	Yellow	Yellow	—
Total current all outputs	A	2	4	—	8	8	—
Analog							
Parameter setting							
Refresh rate	mS	—	—	—	—	—	—
Averaging (5 msec sample interval)	ON/OFF	—	—	—	—	—	—
Voltage							
Input voltage	V	—	—	—	—	—	—
Input impedance	kohm	—	—	—	—	—	—
Output voltage	V	—	—	—	—	—	—
Maximum output current	mA	—	—	—	—	—	—
Source impedance	kohm	—	—	—	—	—	—
Current							
Input current	mA	—	—	—	—	—	—
Input impedance	ohms	—	—	—	—	—	—
Output current	mA	—	—	—	—	—	—
Source impedance	ohms	—	—	—	—	—	—
Converter							
Resolution	Bit	—	—	—	—	—	—
Conversion time	ms	—	—	—	—	—	—
Cumulative error	%	—	—	—	—	—	—
Repetition accuracy	%	—	—	—	—	—	—
Encoder							
Frequency response	Hz	—	—	—	—	—	—
Status indication LED							
Count pulse		—	—	—	—	—	—
Encoder status (input byte 0)	Bit	—	—	—	—	—	—
Referencing active status	0	—	—	—	—	—	—
Reference status	1	—	—	—	—	—	—
Reference line state	2	—	—	—	—	—	—
Zero crossing	3	—	—	—	—	—	—
Control settings (output byte 0)	Bit	—	—	—	—	—	—
Count control	0	—	—	—	—	—	—
Reference enable (ActRef)	1	—	—	—	—	—	—
Reference control	2	—	—	—	—	—	—
Asynchronous reset	3	—	—	—	—	—	—
Zero crossing acknowledge	4	—	—	—	—	—	—

Machine Mount I/O Modules, continued

Description	Unit	EU8E-SWD-4D4D-1	EU8E-SWD-8D8D-1	EU8E-SWD-16DX	EU8E-SWD-16XD-1	EU8E-SWD-16DD	EU1M-SWD-NOP
Temperature							
Parameter setting							
Temperature sensor		—	—	—	—	—	—
Averaging		—	—	—	—	—	—
Range		—	—	—	—	—	—
Temperature range							
PT100 (1)	°C	—	—	—	—	—	—
PT1000 (1)	°C	—	—	—	—	—	—
Ni1000 (1)	°C	—	—	—	—	—	—
PT100 (2)	°C	—	—	—	—	—	—
PT1000 (2)	°C	—	—	—	—	—	—
Ni1000 (2)	°C	—	—	—	—	—	—
Converter							
Resolution (converter)	Bit	—	—	—	—	—	—
Conversion time	ms	—	—	—	—	—	—
Cumulative error	%	—	—	—	—	—	—
Repetition accuracy	%	—	—	—	—	—	—
Display		—	—	—	—	—	—
Resolution (temperature)	°C	—	—	—	—	—	—
I/O Configurations							
24 Vdc bus power to I/O devices	Y/N	Yes	Yes	Yes	Yes	Yes	—
Galvanic isolation of I/O circuitry	Y/N	No	No	No	No	No	—
Operating power per connection	A	0.3	0.3	0.3	0.3	0.3	—
Internally power limited (PTC)	Y/N	Yes	Yes	Yes	Yes	Yes	—
Overload threshold per connection	A	0.6	0.6	0.6	0.6	0.6	—
Overload recovery time	S	0.6	0.6	0.6	0.6	0.6	—
Maximum allowed total current	A	4	4	4	8	8	—
I/O types							
Configurable (digital I/O)	I/O point	—	—	—	—	16	—
Digital IN (sinking)	I/O point	4	8	16	—	Up to 16	—
Digital OUT (sourcing)	I/O point	4	8	—	16	Up to 16	—
Analog IN	I/O point	—	—	—	—	—	—
Analog OUT	I/O point	—	—	—	—	—	—
Encoder IN	I/O point	—	—	—	—	—	—
Temperature sensor input	I/O point	—	—	—	—	—	—
I/O connectors, (IEC-61076-2-101)	M12 A Coding	8x M12-F / 5-pole	8x M12-F / 5-pole	8x M12-F / 5-pole	8x M12-F / 5-pole	8x M12-F / 5-pole	—
Active circuits loaded in connector	Circuits	3	4	4	4	4	—

Machine Mount I/O Modules, continued

Description	Unit	EU8E-SWD-4D4D-1	EU8E-SWD-8D8D-1	EU8E-SWD-16DX	EU8E-SWD-16XD-1	EU8E-SWD-16DD	EU1M-SWD-NOP
I/O Configurations, continued							
I/O connector pin outs							
I/O Connector–1							
Pin 1		24 Vdc	24 Vdc	24 Vdc	24 Vdc	24 Vdc	—
Pin 2		N/C	Out Ch 1	In Ch 1	Out Ch 1	I/O Ch 1	—
Pin 3		GND	GND	GND	GND	GND	—
Pin 4		Out Ch 0	Out Ch 0	In Ch 0	Out Ch 0	I/O Ch 0	—
Pin 5		N/C	N/C	N/C	N/C	N/C	—
Pin 6		—	—	—	—	—	—
Pin 7		—	—	—	—	—	—
Pin 8		—	—	—	—	—	—
I/O Connector–2							
Pin 1		24 Vdc	24 Vdc	24 Vdc	24 Vdc	24 Vdc	—
Pin 2		N/C	Out Ch 3	In Ch 3	Out Ch 3	I/O Ch 3	—
Pin 3		GND	GND	GND	GND	GND	—
Pin 4		Out Ch 2	Out Ch 2	In Ch 2	Out Ch 2	I/O Ch 2	—
Pin 5		N/C	N/C	N/C	N/C	N/C	—
I/O Connector–3							
Pin 1		24 Vdc	24 Vdc	24 Vdc	24 Vdc	24 Vdc	—
Pin 2		N/C	Out Ch 5	In Ch 5	Out Ch 5	I/O Ch 5	—
Pin 3		GND	GND	GND	GND	GND	—
Pin 4		Out Ch 4	Out Ch 4	In Ch 4	Out Ch 4	I/O Ch 4	—
Pin 5		N/C	N/C	N/C	N/C	N/C	—
I/O Connector–4							
Pin 1		24 Vdc	24 Vdc	24 Vdc	24 Vdc	24 Vdc	—
Pin 2		N/C	Out Ch 7	In Ch 7	Out Ch 7	I/O Ch 7	—
Pin 3		GND	GND	GND	GND	GND	—
Pin 4		Out Ch 6	Out Ch 6	In Ch 6	Out Ch 6	I/O Ch 6	—
Pin 5		N/C	N/C	N/C	N/C	N/C	—
I/O Connector–5							
Pin 1		24 Vdc	24 Vdc	24 Vdc	24 Vdc	24 Vdc	—
Pin 2		N/C	In Ch 9	In Ch 9	Out Ch 9	I/O Ch 9	—
Pin 3		GND	GND	GND	GND	GND	—
Pin 4		In Ch 8	In Ch 8	In Ch 8	Out Ch 8	I/O Ch 8	—
Pin 5		N/C	N/C	N/C	N/C	N/C	—
I/O Connector–6							
Pin 1		24 Vdc	24 Vdc	24 Vdc	24 Vdc	24 Vdc	—
Pin 2		N/C	In Ch 11	In Ch 11	Out Ch 11	I/O Ch 11	—
Pin 3		GND	GND	GND	GND	GND	—
Pin 4		In Ch 10	In Ch 10	In Ch 10	Out Ch 10	I/O Ch 10	—
Pin 5		N/C	N/C	N/C	N/C	N/C	—
I/O Connector–7							
Pin 1		24 Vdc	24 Vdc	24 Vdc	24 Vdc	24 Vdc	—
Pin 2		N/C	In Ch 13	In Ch 13	Out Ch 13	I/O Ch 13	—
Pin 3		GND	GND	GND	GND	GND	—
Pin 4		In Ch 12	In Ch 12	In Ch 12	Out Ch 12	I/O Ch 12	—
Pin 5		N/C	N/C	N/C	N/C	N/C	—
I/O Connector–8							
Pin 1		24 Vdc	24 Vdc	24 Vdc	24 Vdc	24 Vdc	—
Pin 2		N/C	In Ch 15	In Ch 15	Out Ch 15	I/O Ch 15	—
Pin 3		GND	GND	GND	GND	GND	—
Pin 4		In Ch 14	In Ch 14	In Ch 14	Out Ch 14	I/O Ch 14	—
Pin 5		N/C	N/C	N/C	N/C	N/C	—

SWD Accessories

Specification	Unit	EU1S-SWD-PF1-2	SWD4-RC5-10	SWD4-ACAP-10	SWD4-SML8-12	SWD4-SFL8-12	SWD4-MNT-VER	SWD4-MNT-DIN
General								
Standards		IEC/EN 61131-2, EN50178, IEC / EN 60529	IEC/EN 61131-2, EN50178, IEC / EN 60529	IEC/EN 61131-2, EN50178, IEC / EN 60529	IEC/EN 61131-2, EN50178, IEC / EN 60529	IEC/EN 61131-2, EN50178, IEC / EN 60529	IEC/EN 61131-2, EN50178, IEC / EN 60529	IEC/EN 61131-2, EN50178, IEC / EN 60529
Dimensions (W x H x L)—reference only	mm	41 x 20 x 59	41 x 20 x 15	13 (dia) x 20 (len)	35 x 83 x 46	35 x 83 x 46	16.1 x 30.7 x 15.5	10.2 x 43 x 19
M12 I/O Connector spacing (L)	mm	—	—	—	—	—	—	—
Weight	g / oz	65 / 2.3	13 / 0.45	15 / 0.525	65/2.3	65/2.3	3.4 / 0.12	6.8 / 0.24
Form factor		Single-T	IP67 bus term	M12-M overload	IP20 enclosure	IP20 enclosure	M20 quick clip	DIN rail clips
Enclosure material	Tee	MM 6208 (black)	MM 6208 (black)	TPV	Thermoplastic	Thermoplastic	Thermoplastic	Thermoplastic
Mounting	Qty	2 mounting holes or with bracket accessory	Integral M12-M	Integral M12-M	Panel mount M12-M	Panel mount M12-F	Single mounting hole	To DIN rail
Ambient Conditions, Mechanical								
Protection type	Type	IP69K	IP69K	IP69K	IP69K	IP69K	—	—
EN/IEC 60529	Type	IP6X / IPX7	IP6X / IPX7	IP6X / IPX7	IP20	IP20	—	—
UL Type		1	1	1	1	1	—	—
Vibrations								
Displacement 3.5 mm	Hz	5–8.4	5–8.4	5–8.4	5–8.4	5–8.4	5–8.4	5–8.4
Acceleration 1 g	Hz	8.4–150	8.4–150	8.4–150	8.4–150	8.4–150	8.4–150	8.4–150
Shock IEC 60068-2-27 1/2 sine 30 g/11 ms	Impacts	9	9	9	9	9	9	9
Drop to	Height, mm	50	50	50	50	50	50	50
Drop freefall	m	0.3	0.3	0.3	0.3	0.3	0.3	0.3
EMC								
Overvoltage category		II	II	II	II	II	—	—
Pollution degree		3	3	3	2	2	—	—
Electrostatic discharge								
Air discharge (level 3)	kV	8	8	8	8	8	—	—
Contact discharge (level 2)	kV	4	4	4	4	4	—	—
Electromagnetic fields		Performance Criterion A	Performance Criterion A	Performance Criterion A	Performance Criterion A	Performance Criterion A	—	—
80–1000 MHz	V/m	10	10	10	10	10	—	—
1.4–2 G	V/m	3	3	3	3	3	—	—
2–2.7 G	V/m	1	1	1	1	1	—	—
Radio interference suppression (SmartWire-DT) (emission and conducted interface voltage)	EN 55011	Class A	Class A	Class A	Class A	Class A	—	—
Burst (level 3)		Performance Criterion B	Performance Criterion B	Performance Criterion B	Performance Criterion B	Performance Criterion B	—	—
Supply cables	kV	2	2	2	2	2	—	—
Signal cables	kV	1	2	2	1	1	—	—
SmartWire-DT cables	kV	1	2	2	1	1	—	—
Surge (level 1)		Performance Criterion B	Performance Criterion B	Performance Criterion B	Performance Criterion B	Performance Criterion B	—	—
Supply cables	kV	0.5	1	1	0.5	0.5	—	—
I/O cables	kV	1	1	1	1	1	—	—
SmartWire-DT cables	kV	1 kV (not possible according to EN61000-6-2 Table 2					—	—
Radiated RFI (level 3) (150 kHz – 80 MHz)		Performance Criterion A	Performance Criterion A	Performance Criterion A	Performance Criterion A	Performance Criterion A	—	—
Supply cables	V	10	10	10	10	10	—	—
I/O cables	V	10	10	10	10	10	—	—
SmartWire-DT cables	V	10	10	10	10	10	—	—
Voltage drops & interrupts	mS	10	10	10	10	10	—	—

SWD Accessories, continued

Specification	Unit	EU1S-SWD-PF1-2	SWD4-RC5-10	SWD4-ACAP-10	SWD4-SML8-12	SWD4-SFL8-12	SWD4-MNT-VER	SWD4-MNT-DIN
Climatic Environmental Conditions								
Ambient temperature	Degrees C	–25 to +70	–25 to +70	–25 to +70	–25 to +70	–25 to +70	–25 to +70	–25 to +70
Storage temperature	Degrees C	–40 to +70	–40 to +70	–40 to +70	–40 to +70	–40 to +70	–40 to +70	–40 to +70
Humidity	% RH	95 at 55 °C / 5–95% condensation permitted						
SmartWire-DT Network								
Stations type		N/A	N/A	N/A	N/A	N/A	—	—
Baud rate setting		—	—	—	—	—	—	—
Maximum	bit / sec	—	—	—	—	—	—	—
SW-DT Status LED		—	—	—	—	—	—	—
Connectors, (IEC-61076-2-101)	M12 A Coding	—	—	—	—	—	—	—
SW-DT network input connector		1x M12-M / 5-pole	1x M12-M / 5-pole	1x M12-M / 5-pole	1x M12-M / 5-pole	1x Lumberg (LT-307.597.1)	—	—
Pin 1		N/C	24 Vdc	24 Vdc	24 Vdc	15 V	—	—
Pin 2		Data A	Data A	N/C	Data A	SEL	—	—
Pin 3		GND	GND	GND	GND	GND	—	—
Pin 4		Data B	Data B	N/C	Data B	Data A	—	—
Pin 5		SEL (IN)	SEL (IN)	N/C	SEL (IN)	Data B	—	—
Pin 6		—	—	—	—	GND	—	—
Pin 7		—	—	—	—	0 V	—	—
Pin 8		—	—	—	—	24 Vdc	—	—
SW-DT network output connector		1x M12-F / 5-pole	—	—	1x Lumberg (LT-307.597.1)	1x M12-F / 5-pole	—	—
Pin 1		24 Vdc	—	—	15 V	24 Vdc	—	—
Pin 2		Data A	—	—	SEL	Data A	—	—
Pin 3		GND	—	—	GND	GND	—	—
Pin 4		Data B	—	—	Data A	Data B	—	—
Pin 5		SEL (OUT)	—	—	Data B	SEL (OUT)	—	—
Pin 6		—	—	—	GND	—	—	—
Pin 7		—	—	—	0V	—	—	—
Pin 8		—	—	—	24 Vdc	—	—	—
SW-DT network branch connector		—	—	—	—	—	—	—
Pin 1		—	—	—	—	—	—	—
Pin 2		—	—	—	—	—	—	—
Pin 3		—	—	—	—	—	—	—
Pin 4		—	—	—	—	—	—	—
Pin 5		—	—	—	—	—	—	—
Pin 6		—	—	—	—	—	—	—
Pin 7		—	—	—	—	—	—	—
Pin 8		—	—	—	—	—	—	—
24 Vdc Supply (SWD4-R)								
Rated operational voltage	V/U_e	—	24 V –15% +20%	—	—	—	—	—
Residual ripple on the input voltage	%	—	≤5	—	—	—	—	—
Reverse Polarity		—	Yes	—	—	—	—	—
Rated supply current	mA	—	12	—	—	—	—	—
24 Vdc Supply (PF1-2)								
Rated operational voltage	V/U_e	24 V –15% +20%	—	—	—	—	—	—
Residual ripple on the input voltage	%	≤5	—	—	—	—	—	—
Rated supply current	A	4	—	—	—	—	—	—
Connectors, (IEC-61076-2-101)	M12 A Coding	—	—	—	—	—	—	—

SWD Accessories, continued

Specification	Unit	EU1S-SWD-PF1-2	SWD4-RC5-10	SWD4-ACAP-10	SWD4-SML8-12	SWD4-SFL8-12	SWD4-MNT-VER	SWD4-MNT-DIN
24 Vdc Supply (PF1-2), continued								
PF1 24 Vdc input connector		1x M12-M / 5-pole	—	—	—	—	—	—
Pin 1		24 Vdc	—	—	—	—	—	—
Pin 2		N/C	—	—	—	—	—	—
Pin 3		GND	—	—	—	—	—	—
Pin 4		N/C	—	—	—	—	—	—
Pin 5		N/C	—	—	—	—	—	—
Power indicator LED		Green (625 nm)	—	—	—	—	—	—
Active Cap (-ACAP-10)								
Rated operational voltage	V/U_e	—	—	24 V –15% +20%	—	—	—	—
Reverse Polarity		—	—	N/A	—	—	—	—
Rated supply current	mA	—	—	≥1 mA	—	—	—	—
Connectors, (IEC-61076-2-101)	M12 A Coding	—	—	—	—	—	—	—
Active Cap M12-M		—	—	1x M12-M / 2 Pole	—	—	—	—
Pin 1		—	—	24 Vdc	—	—	—	—
Pin 2		—	—	N/C	—	—	—	—
Pin 3		—	—	GND	—	—	—	—
Pin 4		—	—	N/C	—	—	—	—
Pin 5		—	—	N/C	—	—	—	—
Parameter		—	—		—	—	—	—
Diagnostic per M12 I/O connector		—	—	ON/OFF	—	—	—	—
15 Vdc Supply (to Flat Cable)								
Rated operational voltage	V/U_e	—	—	—	14,5V +/- 3%	—	—	—
Residual ripple on the input voltage	%	—	—	—	≤5	—	—	—
Short Circuit Protection		—	—	—	Yes	—	—	—
Output Power	mA	—	—	—	120	—	—	—
24 Vdc Out (Push In Terminals)								
Rated operational voltage	V/U_e	—	—	—	24 V	24 V	—	—
Short circuit protection		—	—	—	No	No	—	—
Connectors		—	—	—			—	—
24 V Out 1		—	—	—	LSF-SMT3.5	LSF-SMT3.5	—	—
Pin 1		—	—	—	24 Vdc	24 Vdc	—	—
Pin 2		—	—	—	0 V	0 V	—	—
24 V Out 2		—	—	—	LSF-SMT3.5	—	—	—
Pin 1		—	—	—	24 Vdc	—	—	—
Pin 2		—	—	—	0 V	—	—	—
24 Vdc In (Push In Terminals)								
Rated operational voltage	V/U_e	—	—	—	—	24 Vdc –15%/+20%	—	—
Residual ripple on the input voltage	%	—	—	—	—	≤5	—	—
Reverse polarity protection		—	—	—	—	Yes	—	—
Rated current	A	—	—	—	—	4	—	—
Short Circuit Protection		—	—	—	—	No	—	—
Connectors		—	—	—	—	—	—	—
24 V In 1		—	—	—	—	LSF-SMT3.5	—	—
Pin 1		—	—	—	—	24 Vdc	—	—
Pin 2		—	—	—	—	0 V	—	—

Contactor Modules

Description	Unit	DIL-SWD-32-001	DIL-SWD-32-002	PKE-SWD-32
General				
Standards		IEC/EN 61131-2 EN 50178 IEC/EN 60947	IEC/EN 61131-2 EN 50178 IEC/EN 60947	IEC/EN 61131-2 EN 50178 IEC/EN 60947
Dimensions (W x H x D)	in (mm)	1.77 x 1.50 x 3.0 (45 x 38 x 76)	1.77 x 1.50 x 3.0 (45 x 38 x 76)	1.77 x 1.50 x 3.0 (45 x 38 x 76)
Weight	lbs (kg)	0.9 (0.04)	0.9 (0.04)	0.9 (0.04)
Mounting		on XTCE007–XTCE032	on XTCE007–XTCE032	—
Mounting position		as XTCE007–XTCE032	as XTCE007–XTCE032	—
Ambient Conditions, Mechanical				
Degree of protection (IEC/EN 60529)		IP20	IP20	—
Vibrations (IEC/EN 61131-2:2008)				
Constant amplitude 3.5 mm	Hz	5–8.4	5–8.4	5–8.4
Constant acceleration 1 g	Hz	8.4–150	8.4–150	8.4–150
Mechanical shock resistance (IEC/EN 60068-2-27) semi-sinusoidal 15 g/11 ms	Impacts	9	9	9
Drop to IEC/EN 60068-2-31 (drop height)	in (mm)	1.97 (50)	1.97 (50)	1.97 (50)
Free fall, packaged (IEC/EN 60068-2-32)	ft (m)	1.0 (0.3)	1.0 (0.3)	1.0 (0.3)
Electromagnetic Compatibility (EMC)				
Overvoltage category		II	II	II
Pollution degree		2	2	2
Electrostatic discharge (IEC/EN 61131-2:2008)				
Air discharge (Level 3)	kV	8	8	8
Contact discharge (Level 2)	kV	4	4	4
Electromagnetic fields (IEC/EN 61131-2:2008)				
80–1000 MHz	V/m	10	10	10
1.4–2 GHz	V/m	3	3	3
2–2.7 GHz	V/m	1	1	1
Radio interference suppression (SmartWire-DT)		EN 55011 Class A	EN 55011 Class A	EN 55011 Class A
Burst (IEC/EN 61131-2:2008, Level 3)				
CAN/DP bus cable	kV	1	1	1
SmartWire-DT cables	kV	1	1	1
Radiated RFI (IEC/EN 61131-2:2008, Level 3)	V	10	10	10
Climatic Environmental Conditions				
Operating ambient temperature (IEC 60068-2)	°F (°C)	–13° to 140° (–25° to 60°)	–13° to 140° (–25° to 60°)	–13° to 140° (–25° to 60°)
Condensation		Prevent with suitable measures	Prevent with suitable measures	Prevent with suitable measures
Storage	°F (°C)	–22° to 158° (–30° to 70°)	–22° to 158° (–30° to 70°)	–22° to 158° (–30° to 70°)
Relative humidity, noncondensing (IEC/EN 60068-2-30)	%	5–95	5–95	5–95

Contactor Modules, continued

Description	Unit	DIL-SWD-32-001	DIL-SWD-32-002	PKE-SWD-32
SmartWire-DT Network				
Station type		SmartWire-DT station (mode)	SmartWire-DT station (mode)	SmartWire-DT (slave)
Address allocation		Automatic	Automatic	Automatic
SmartWire-DT status LED		Green/orange	Green/orange	Green/orange
Connections				
Plug		8-pole	8-pole	8-pole
Plug connectors		External device plug SWD4-8SF2-5	External device plug SWD4-8SF2-5	External device plug SWD4-8SF2-5
Current consumption (15 V SWD supply)		40 mA	40 mA	58 mA
Mode Parameter				
Manual/automatic mode		No	Yes	Yes
Setting		—	Rotary switch	Rotary switch
Connection Auxiliary Contact				
Number		2	2	—
Rated voltage (U_e) ①	Vdc	15	15	—
Input current at 1 signal, typical	mA	3	3	—
Potential isolation		No	No	—
Cable length	ft (m)	≤9.2 (2.8)	≤9.2 (2.8)	≤9.2 (2.8)
Connection type		Push in terminals	Push in terminals	Push in terminals
Terminal Capacities				
Solid	mm^2	0.2–1.5 (AWG 24–16)	0.2–1.5 (AWG 24–16)	0.2–1.5 (AWG 24–16)
Flexible with ferrule ②	mm^2	0.25–1.5	0.25–1.5	0.25–1.5

Notes

① Own supply.
② Minimum length: 8 mm.

Pilot Device Modules

Description	Unit	M22-SWD-K11	M22-SWD-KC11	M22-SWD-LED-_	M22-SWD-LEDC-_	M22-SWD-K11-LED_
General						
Standards		IEC/EN 61131-2 EN 50178	IEC/EN 61131-2 EN 50178	IEC/EN 61131-2 EN 50178	IEC/EN 61131-2 EN 50178	IEC/EN 61131-2 EN 50178
Dimensions (W x H x D)	in (mm)	0.47 x 1.65 x 1.54 (12 x 42 x 39)	0.47 x 1.77x 1.46 (12 x 45 x 37)	0.39 x 1.65 x 1.77 (10 x 42 x 45)	0.39 x 1.77 x 1.65 (10 x 45 x 42)	0.47 x 1.65 x 1.77 (12 x 42 x 45)
Weight	lbs (g)	0.022 (10)	0.022 (10)	0.022 (10)	0.022 (10)	0.022 (10)
Mounting position		As required	As required	As required	As required	As required
Ambient Conditions, Mechanical						
Degree of protection (IEC/EN 60529)		IP20	IP20	IP20	IP20	IP20
Vibrations (IEC/EN 61131-2:2008)						
Constant amplitude 3.5 mm	Hz	5–8.4	5–8.4	5–8.4	5–8.4	5–8.4
Constant acceleration 1 g	Hz	8.4–150	8.4–150	8.4–150	8.4–150	8.4–150
Mechanical shock resistance (IEC/EN 60068-2-27) semi-sinusoidal 15 g/11 ms	Impacts	9	9	9	9	9
Drop to IEC/EN 60068-2-31 (drop height)	in (mm)	1.97 (50)	1.97 (50)	1.97 (50)	1.97 (50)	1.97 (50)
Free fall, packaged (IEC/EN 60068-2-32)	ft (m)	1.0 (0.3)	1.0 (0.3)	1.0 (0.3)	1.0 (0.3)	1.0 (0.3)
Electromagnetic Compatibility (EMC)						
Overvoltage category		Not applicable	Not applicable	Not applicable	Not applicable	Not applicable
Pollution degree		2	2	2	2	2
Electrostatic discharge (IEC/EN 61131-2:2008)						
Air discharge (Level 3)	kV	8	8	8	8	8
Contact discharge (Level 2)	kV	4	4	4	4	4
Electromagnetic fields (IEC/EN 61131-2:2008)						
80–1000 MHz	V/m	10	10	10	10	10
1.4–2 GHz	V/m	3	3	3	3	3
2–2.7 GHz	V/m	1	1	1	1	1
Radio interference suppression (SmartWire-DT)		EN 55011 Class A	EN 55011 Class A	EN 55011 Class A	EN 55011 Class A	EN 55011 Class A
Burst (IEC/EN 61131-2:2008, Level 3)						
Supply cables	kV	2	2	2	2	2
SmartWire-DT cables	kV	1	1	1	1	1
Radiated RFI (IEC/EN 61131-2:2008, Level 3)	V	10	10	10	10	10
Climatic Environmental Conditions						
Operating ambient temperature (IEC 60068-2)	°F (°C)	–22° to 131° (–30° to 55°)	–22° to 131° (–30° to 55°)	–22° to 131° (–30° to 55°)	–22° to 131° (–30° to 55°)	–22° to 131° (–30° to 55°)
Condensation		Prevent with suitable measures				
Storage	°F (°C)	–40° to 176° (–40° to 80°)	–40° to 176° (–40° to 80°)	–40° to 176° (–40° to 80°)	–40° to 176° (–40° to 80°)	–40° to 176° (–40° to 80°)
Relative humidity, noncondensing (IEC/EN 60068-2-30)	%	9–95	9–95	9–95	9–95	9–95
SmartWire-DT Network						
Station type		SmartWire-DT station (node)				
Address allocation		Automatic	Automatic	Automatic	Automatic	Automatic
SmartWire-DT status LED		Green	Green	Green	Green	Green
Connections						
Plug		8-pole	8-pole	8-pole	8-pole	8-pole
Plug connectors		SWD4-8SF2-5	M22-SWD-I_LP	SWD4-8SF2-5	M22-SWD-I_LP	SWD4-8SF2-5
Number of insertion cycles		≥50	≥50	≥50	≥50	≥50
Current consumption (15 V SWD supply)		10 mA	10 mA	22 mA	22 mA	22 mA
Function Element						
Contacts		1 changeover contact	1 changeover contact	—	—	1 changeover contact
Lifespan mechanical/electrical (operations)		1×10^6	1×10^6	—	—	1×10^6
LED display		No	No	Yes	Yes	Yes
Diagnostics		Yes	Yes	No	No	Yes
Mounting		Front mount	Base mount	Front mount	Base mount	Front mount

Pilot Device Modules, continued

Description	Unit	M22-SWD-K11LEDC-_	M22-SWD-K22	M22-SWD-KC22	M22-SWD-K22-LED_	M22-SWD-K22LEDC-_
General						
Standards		IEC/EN 61131-2 EN 50178	IEC/EN 61131-2 EN 50178	IEC/EN 61131-2 EN 50178	IEC/EN 61131-2 EN 50178	IEC/EN 61131-2 EN 50178
Dimensions (W x H x D)	in (mm)	0.47 x 1.77 x 1.65 (12 x 45 x 42)	0.67 x 1.65 x 1.54 (17 x 42 x 39)	0.67 x 1.77 x 1.46 (17 x 45 x 37)	0.67 x 1.65 x 1.77 (17 x 42 x 45)	0.67 x 1.77 x 1.65 (17 x 45 x 42)
Weight	lbs (g)	0.022 (10)	0.030 (14)	0.030 (14)	0.030 (14)	0.030 (14)
Mounting position		As required	As required	As required	As required	As required
Ambient Conditions, Mechanical						
Degree of protection (IEC/EN 60529)		IP20	IP20	IP20	IP20	IP20
Vibrations (IEC/EN 61131-2:2008)						
Constant amplitude 3.5 mm	Hz	5–8.4	5–8.4	5–8.4	5–8.4	5–8.4
Constant acceleration 1 g	Hz	8.4–150	8.4–150	8.4–150	8.4–150	8.4–150
Mechanical shock resistance (IEC/EN 60068-2-27) semi-sinusoidal 15 g/11 ms	Impacts	9	9	9	9	9
Drop to IEC/EN 60068-2-31 (drop height)	in (mm)	1.97 (50)	1.97 (50)	1.97 (50)	1.97 (50)	1.97 (50)
Free fall, packaged (IEC/EN 60068-2-32)	ft (m)	1.0 (0.3)	1.0 (0.3)	1.0 (0.3)	1.0 (0.3)	1.0 (0.3)
Electromagnetic Compatibility (EMC)						
Overvoltage category		Not applicable	Not applicable	Not applicable	Not applicable	Not applicable
Pollution degree		2	2	2	2	2
Electrostatic discharge (IEC/EN 61131-2:2008)						
Air discharge (Level 3)	kV	8	8	8	8	8
Contact discharge (Level 2)	kV	4	4	4	4	4
Electromagnetic fields (IEC/EN 61131-2:2008)						
80–1000 MHz	V/m	10	10	10	10	10
1.4–2 GHz	V/m	3	3	3	3	3
2–2.7 GHz	V/m	1	1	1	1	1
Radio interference suppression (SmartWire-DT)		EN 55011 Class A	EN 55011 Class A	EN 55011 Class A	EN 55011 Class A	EN 55011 Class A
Burst (IEC/EN 61131-2:2008, Level 3)						
Supply cables	kV	2	2	2	2	2
SmartWire-DT cables	kV	1	1	1	1	1
Radiated RFI (IEC/EN 61131-2:2008, Level 3)	V	10	10	10	10	10
Climatic Environmental Conditions						
Operating ambient temperature (IEC 60068-2)	° F (°C)	–22° to 131° (–30° to 55°)	–22° to 131° (–30° to 55°)	–22° to 131° (–30° to 55°)	–22° to 131° (–30° to 55°)	–22° to 131° (–30° to 55°)
Condensation		Prevent with suitable measures				
Storage	° F (°C)	–40° to 176° (–40° to 80°)	–40° to 176° (–40° to 80°)	–40° to 176° (–40° to 80°)	–40° to 176° (–40° to 80°)	–40° to 176° (–40° to 80°)
Relative humidity, noncondensing (IEC/EN 60068-2-30)	%	9–95	5–95	5–95	5–95	5–95
SmartWire-DT Network						
Station type		SmartWire-DT station (node)				
Address allocation		Automatic	Automatic	Automatic	Automatic	Automatic
SmartWire-DT status LED		Green	Green	Green	Green	Green
Connections						
Plug		8-pole	8-pole	8-pole	8-pole	8-pole
Plug connectors		M22-SWD-I_LP	SWD4-8SF2-5	M22-SWD-I_LP	SWD4-8SF2-5	M22-SWD-I_LP
Number of insertion cycles		≥50	≥50	≥50	≥50	≥50
Current consumption (15 V SWD supply)		22 mA	10 mA	10 mA	22 mA	22 mA
Function Element						
Contacts		1 contact	2 contacts	2 contacts	2 contacts	2 contacts
Lifespan mechanical/electrical (operations)		1×10^6	1×10^6	1×10^6	1×10^6	1×10^6
LED display		Yes	No	No	Yes	Yes
Diagnostics		Yes	Yes	Yes	Yes	Yes
Mounting		Base mount	Front mount	Base mount	Front mount	Base mount

Stacklight Modules—SL4/SL7 Series

SL4/SL7 General Specifications

Description	Specification
Standards	IEC/EN 60947-5-1
Lens color	Blue, green, red, clear, yellow, amber
Number of signal elements	Max. 5 with standard base Max. 10 with base for mounting on both sides
Mechanical Ratings	
Shock (IEC 68-2-27)	11 ms, 15g
Vibration (IEC 68-2-6)	20 sweeps 10–150 Hz, 1g
Climate Conditions	
Climatic proofing	Damp heat, constant, to IEC 60068-2-78 Damp heat, cyclic, to IEC 60069-2-30
Operating temperature	–22° to +140°F (–30° to +60°C)
Storage temperature	–22° to +185°F (–30° to +85°C)
Environmental Ratings	
IEC degree of protection	UL Type 4/4X/13, IP66 IEC/EN 60529
Protection type UL	Type 4/4X/13
Materials	
Cover	Polycarbonate
Lenses	Polycarbonate
Stacklight base	Polycarbonate
Tubes	Aluminum
Terminal Capacity	
Solid or flexible conductor	0.13–2.5 mm^2
Flexible with ferrule with plastic collar	0.25–1.5 mm^2 AWG 24–AWG 14
Contacts	
Rated impulse withstand voltage (U_{imp})	4000 Vac
Rated insulation voltage (U_i)	250V
Overvoltage category/pollution degree	III/3

Dimensions

Approximate Dimensions in Inches (mm)

Gateways

EU5C-SWD_

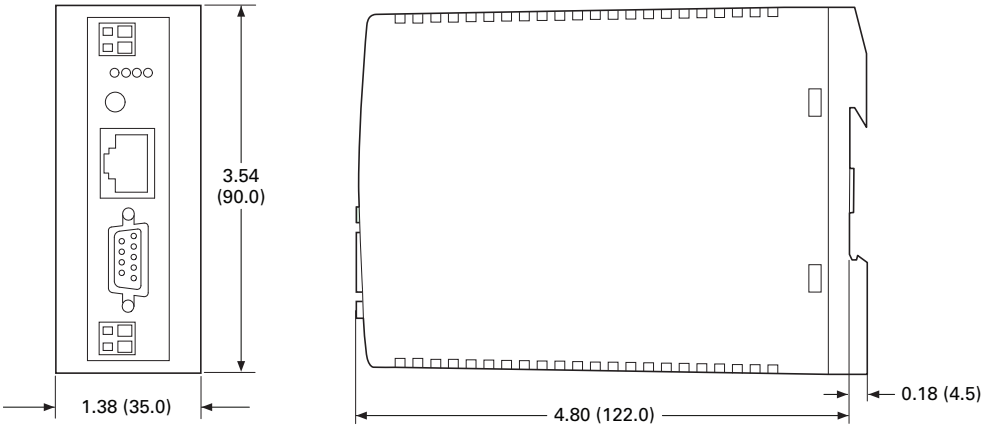

Powerfeed Modules

EU5C-SWD-PF_

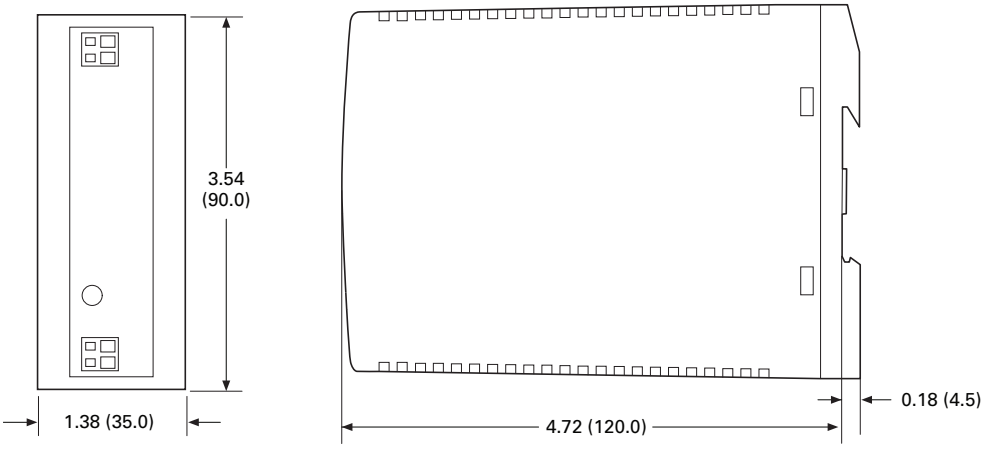

I/O Modules

EU5E-SWD_

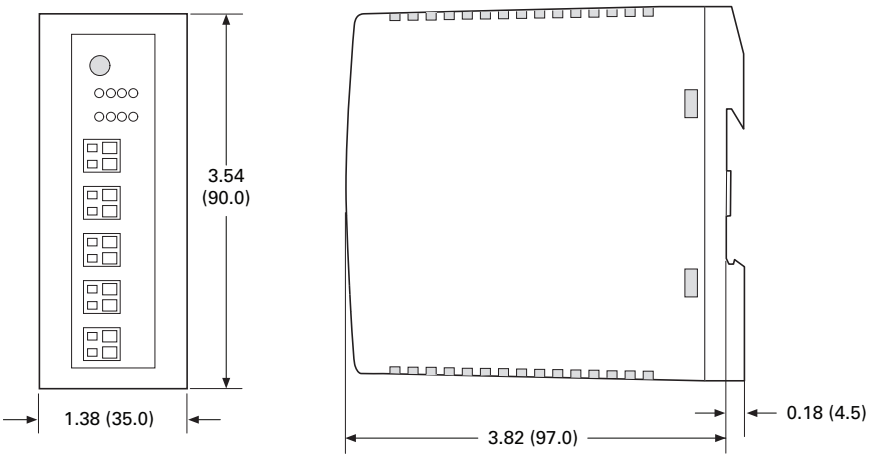

Approximate Dimensions in Inches (mm)

Terminating Resistor

SWD4-RC8-10

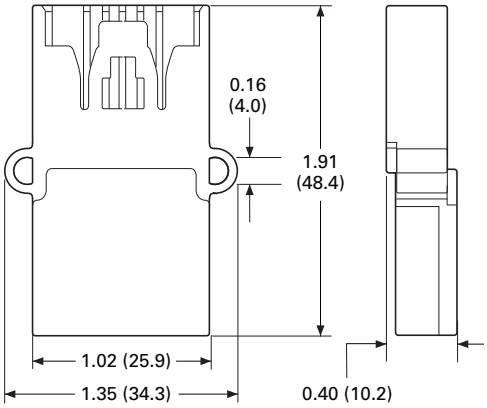

Coupling

SWD4-8SFF2-5

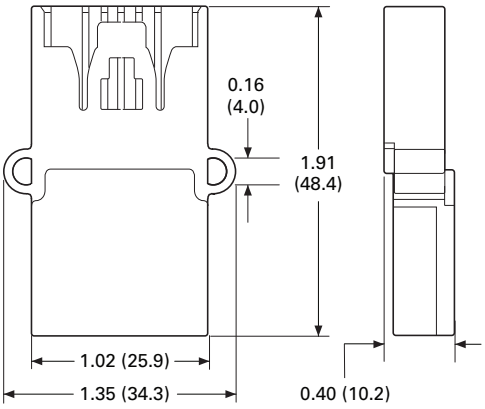

Enclosure Bushing Plug

SWD4-SM8-20

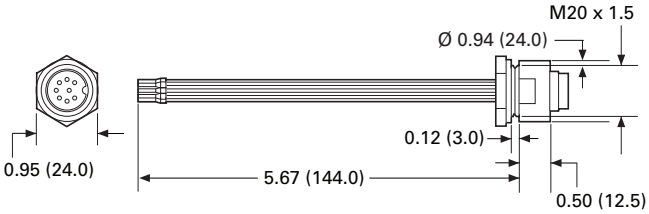

Enclosure Bushing Socket

SWD4-SF8-20

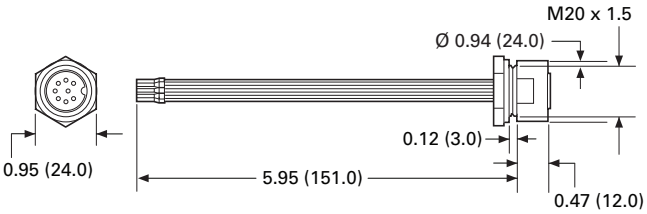

Cabinet Cable Adapter Plug

SWD4-SML8-20

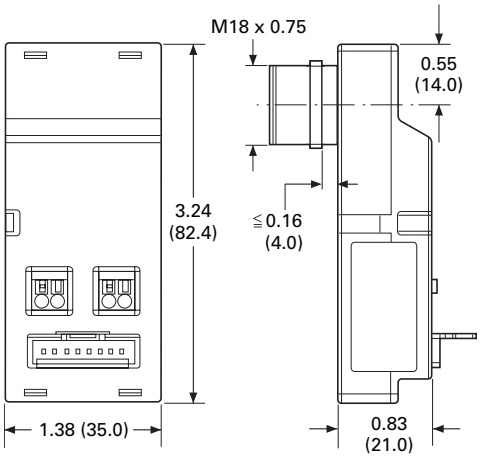

Cabinet Cable Adapter Socket

SWD4-SFL8-20

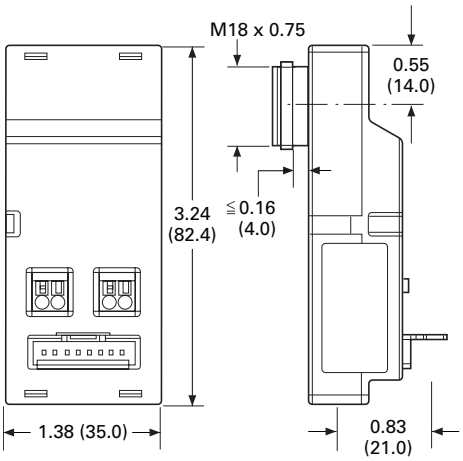

Approximate Dimensions in Inches (mm)

Panel Cable Adapter

SWD4-8FRF-10

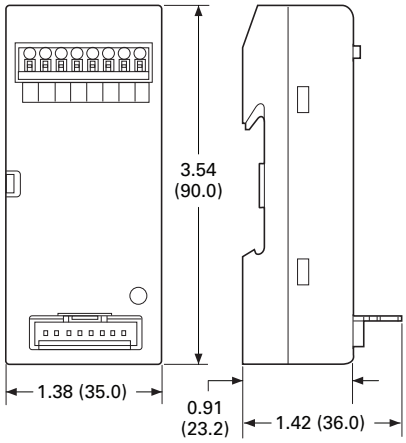

Round Cable Socket

SWD4-SF8-67

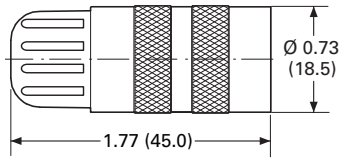

Round Cable Plug

SWD4-SM8-67

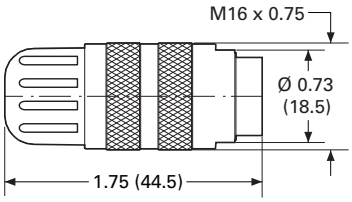

Right Angle Round Cable Socket

SWD4-SF8-67W

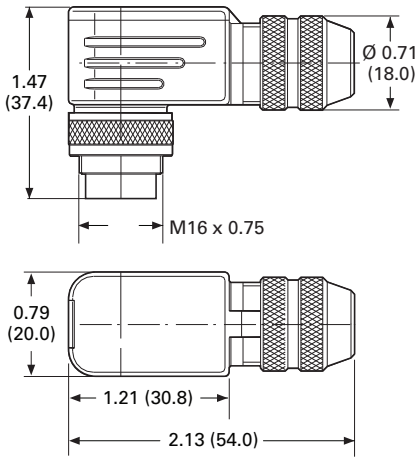

Right Angle Round Cable Plug

SWD4-SM8-67W

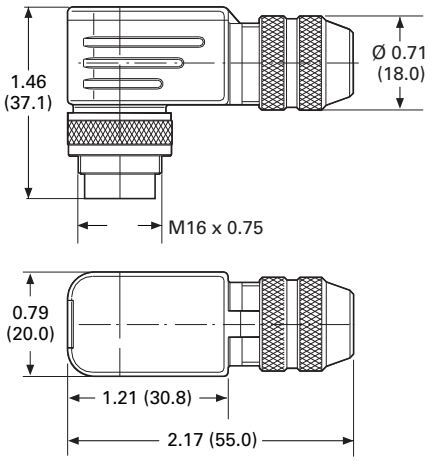

Approximate Dimensions in Inches (mm)

Contactor Modules

DIL-SWD-32-001 and DIL-SWD-32-002

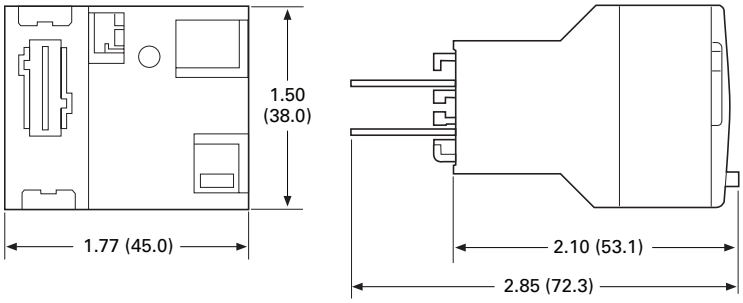

SmartWire-DT PKE Modules

PKE-SWD-32

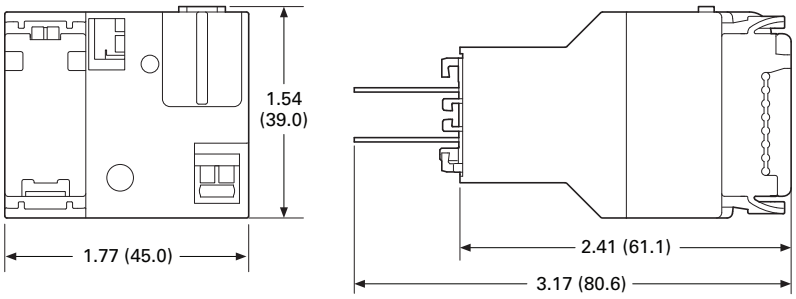

Pilot Device Modules

M22-SWD-K_, M22-SWD-LED_

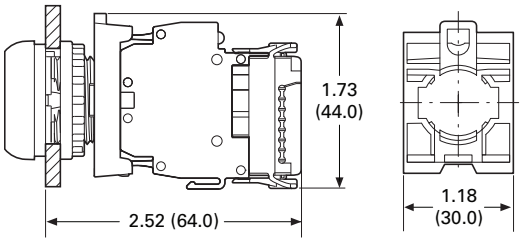

Approximate Dimensions in Inches (mm)

Stacklight Modules

SL7-SWD, SL4-SWD

SL7-FMS-...

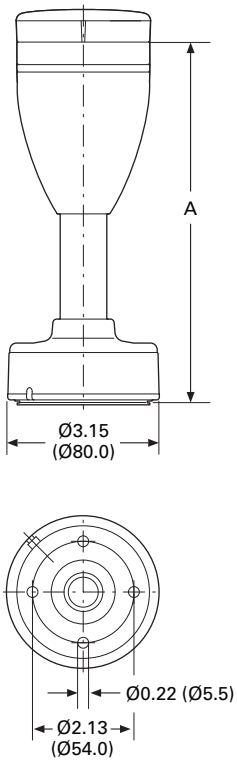

SL7-SWD ①

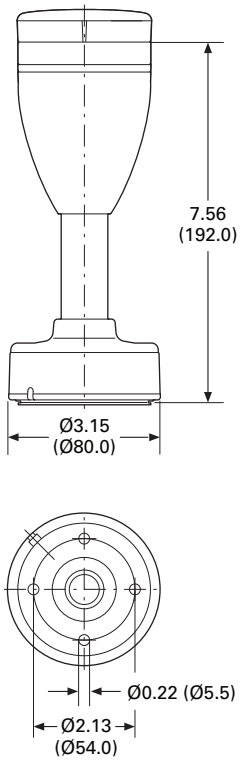

SL4-FMS-...

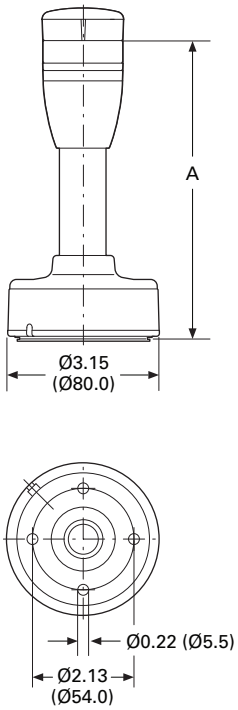

SL4-SWD ①

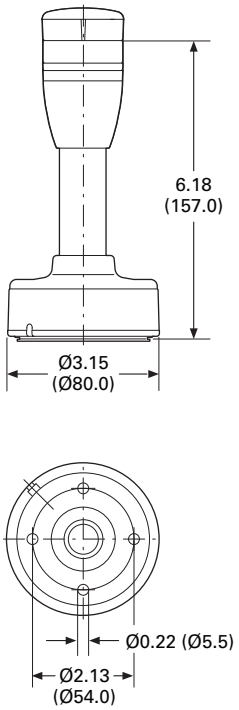

Catalog Number	A
SL7-FMS-100	7.55 (192.0)
SL7-FMS-250	13.46 (342.0)
SL7-FMS-400	19.37 (192.0)

Note

① For connecting to SmartWire-DT.

Catalog Number	A
SL4-FMS-100	6.18 (157.0)
SL4-FMS-250	12.09 (307.0)
SL4-FMS-400	17.99 (457.0)

Note

① For connecting to SmartWire-DT.

Device Plug

SWD4-8SF2-5

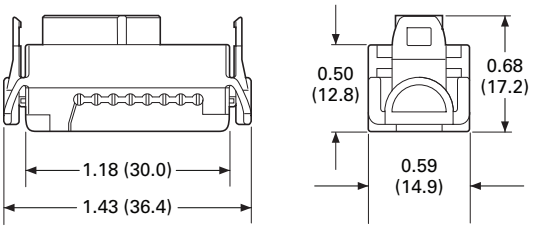

Approximate Dimensions in Inches (mm)

On Machine I/O Modules (T Connectors)

Single T Connector

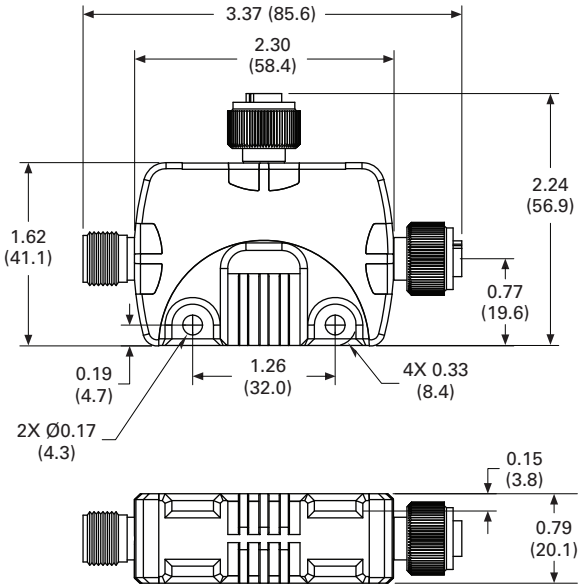

Dual T Connector

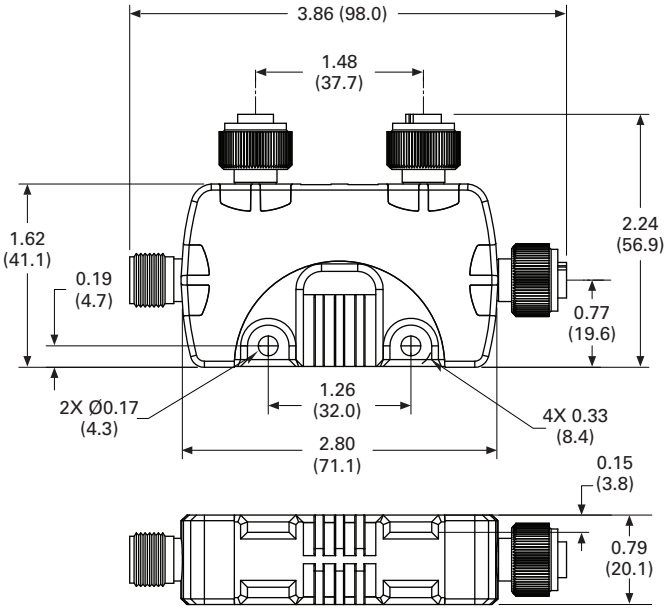

Powerfeed T Connector

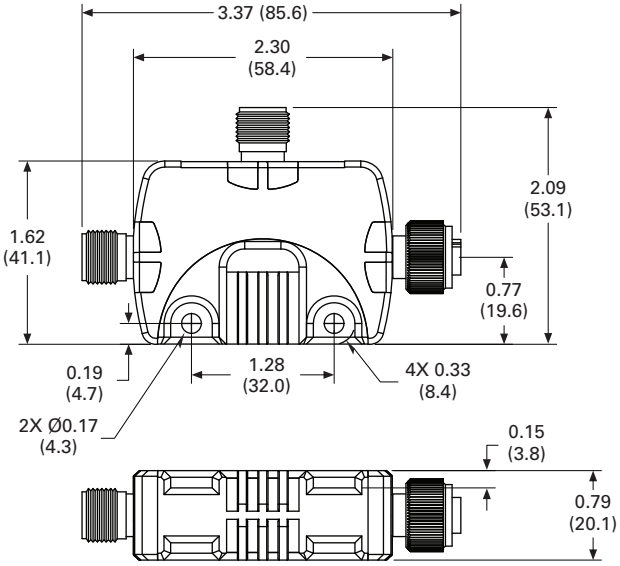

NOP Module

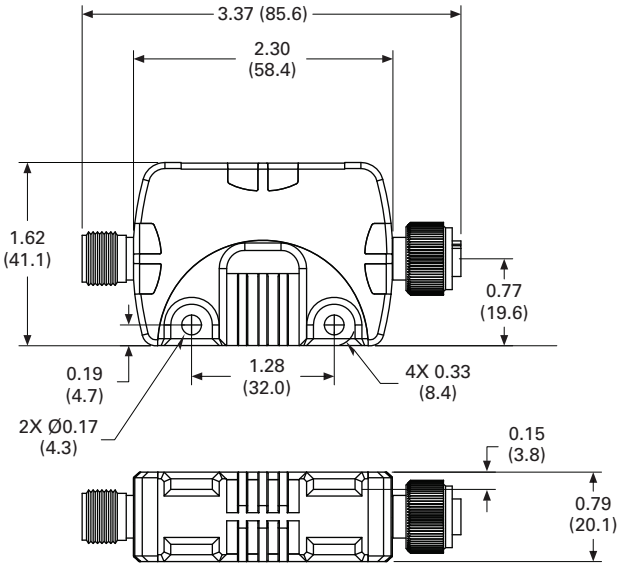

Approximate Dimensions in Inches (mm)

Quad: 4/8-Channel Multiblock Modules

EU6E-SWD-_

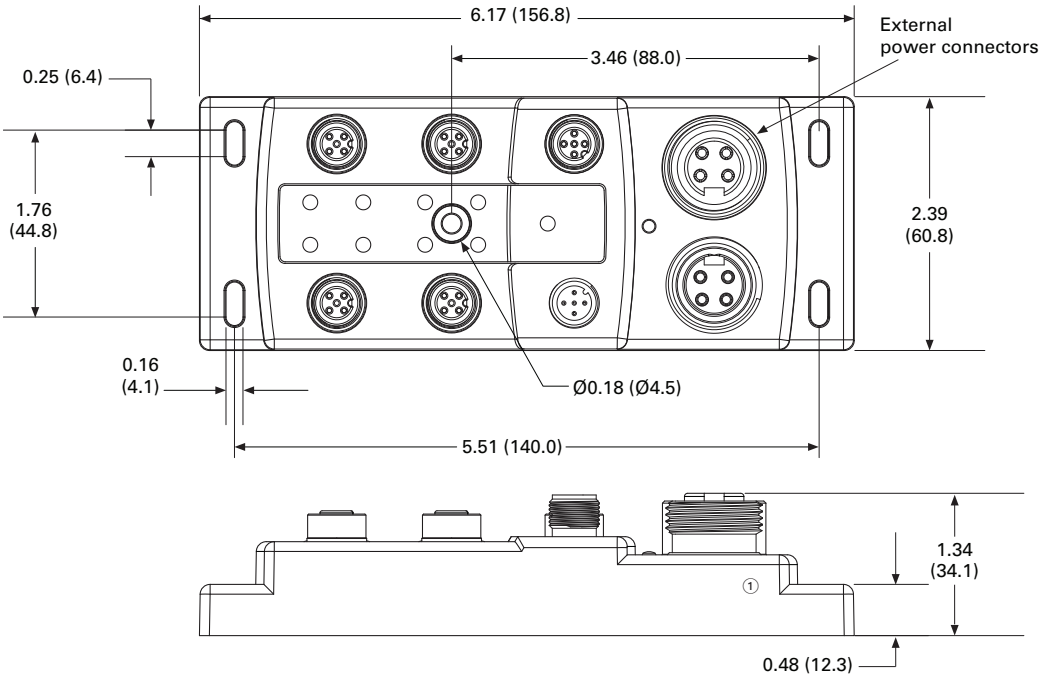

Octal: 8/16-Channel Multiblock Modules

EU8E-SWD-_

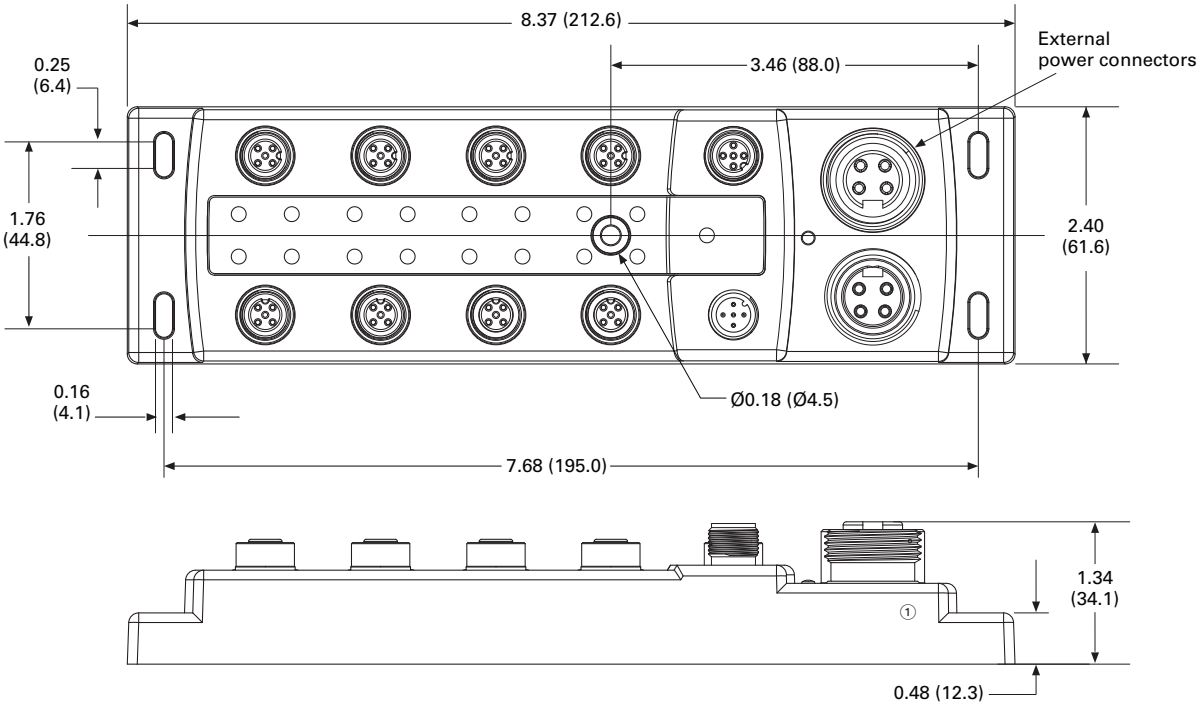

Note

① External power connectors only present in EU6E/EU8E models ending in -1 or -2.

Approximate Dimensions in Inches (mm)

Panel Adapters

SWD4-SFL8-12

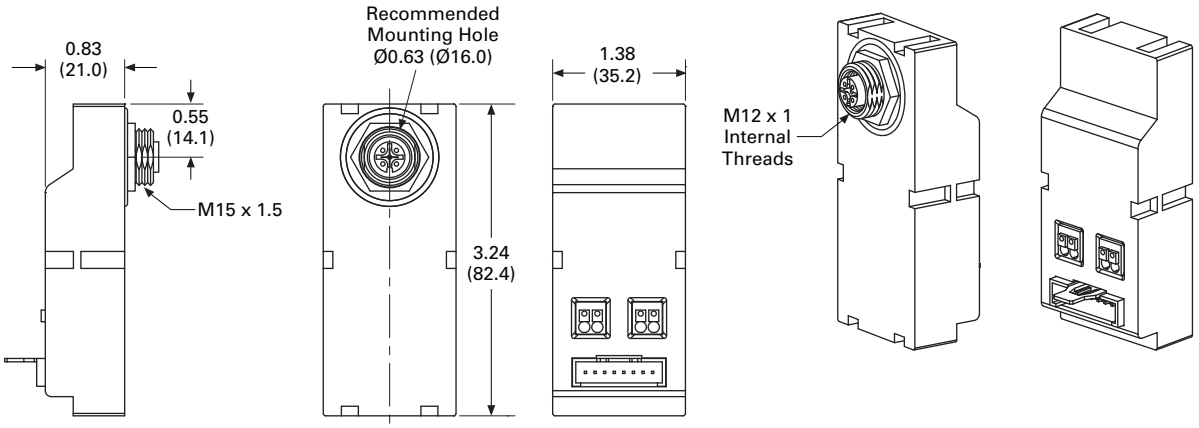

SWD4-SML8-12

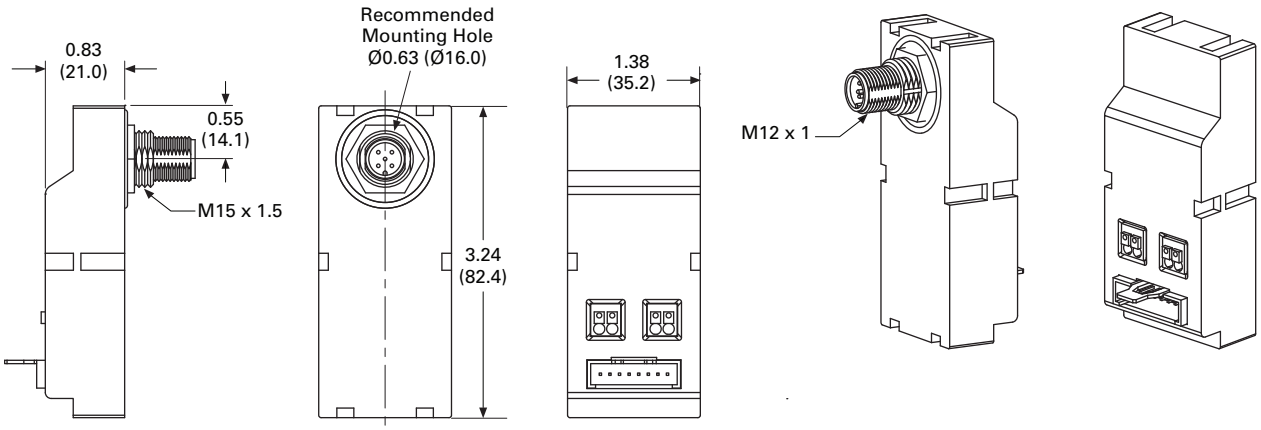

SWD4-SML5-12

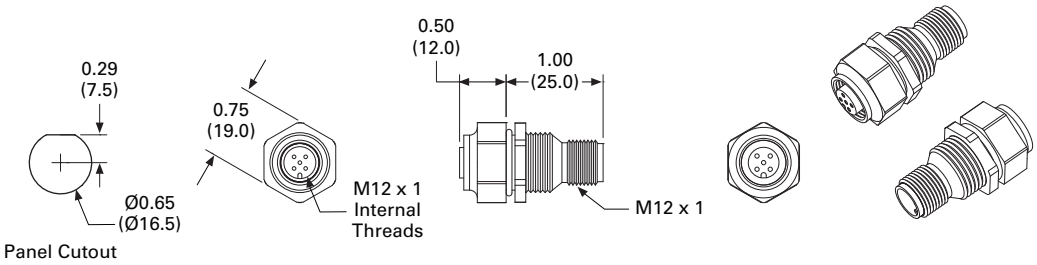

Approximate Dimensions in Inches (mm)

Receptacles

SWD4-PRM5-1-S

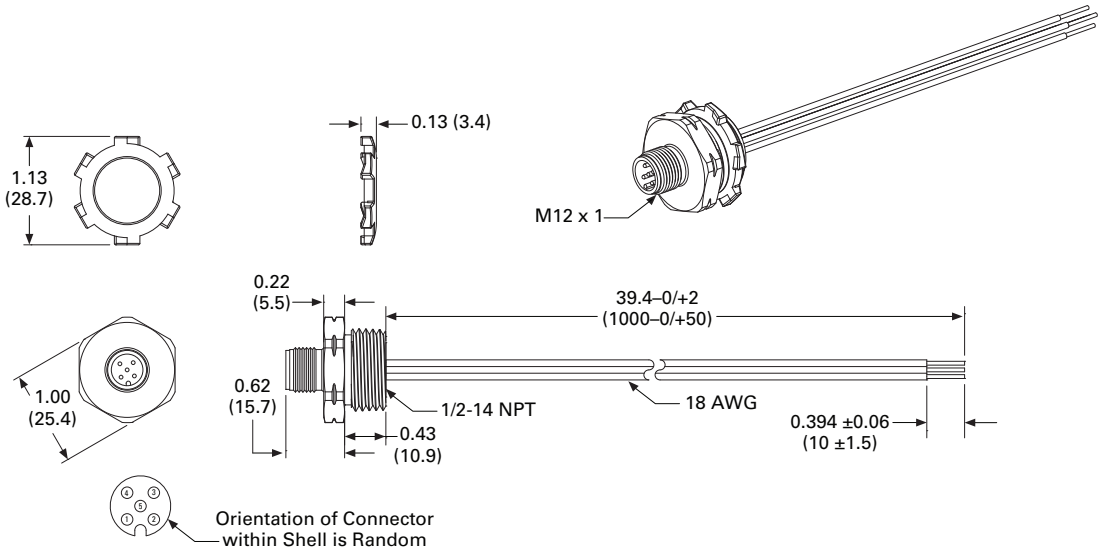

SWD4-PRM5-2-S

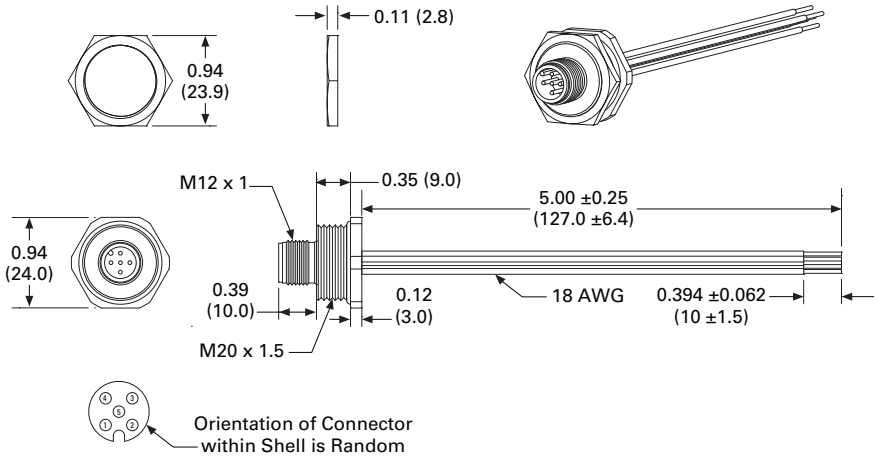

Approximate Dimensions in Inches (mm)

SWD4-PRF5-1-S

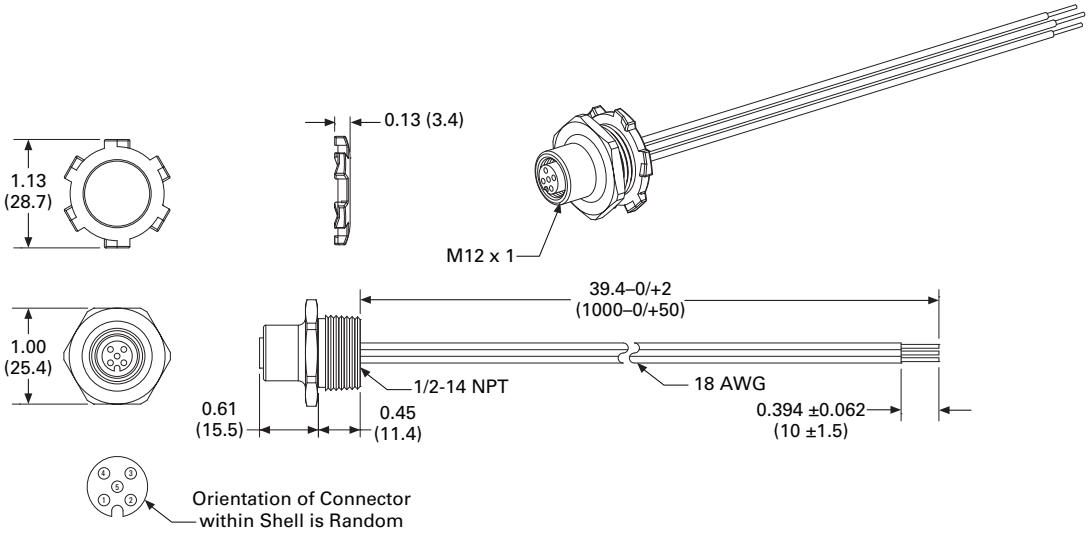

SWD4-PRF5-2-S

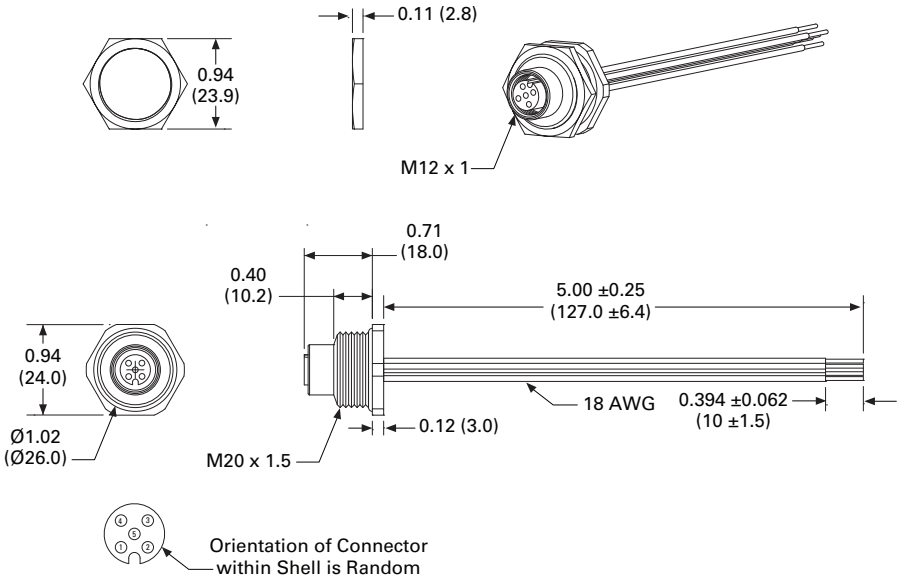

SWD4-PRF4P-1-S

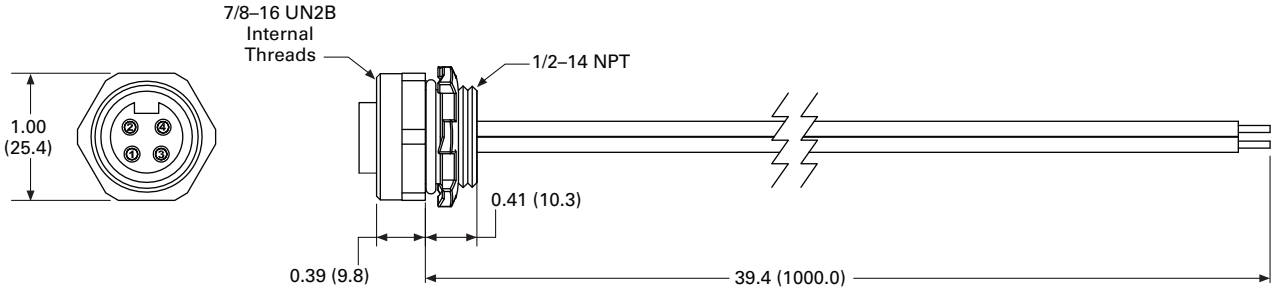

Approximate Dimensions in Inches (mm)

Mounting Brackets

SWD4-MNT-VER

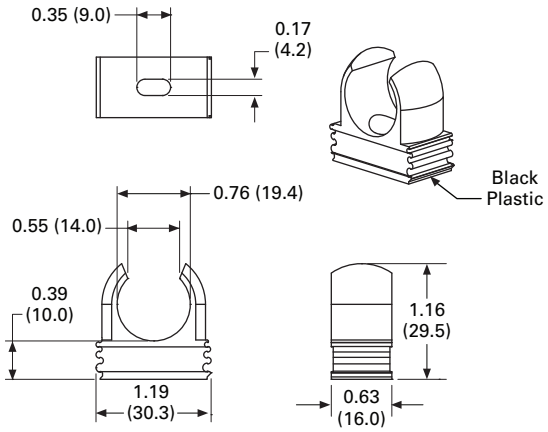

SWD4-MNT-DIN

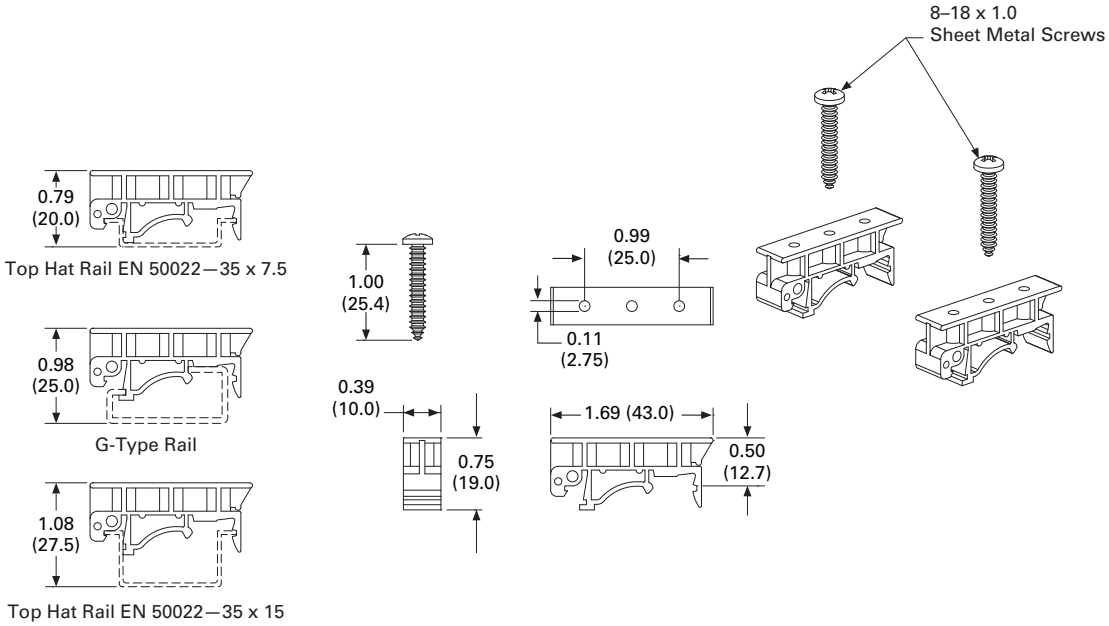

Approximate Dimensions in Inches (mm)

Field Wireable Connectors

SWD4-SF4P-67

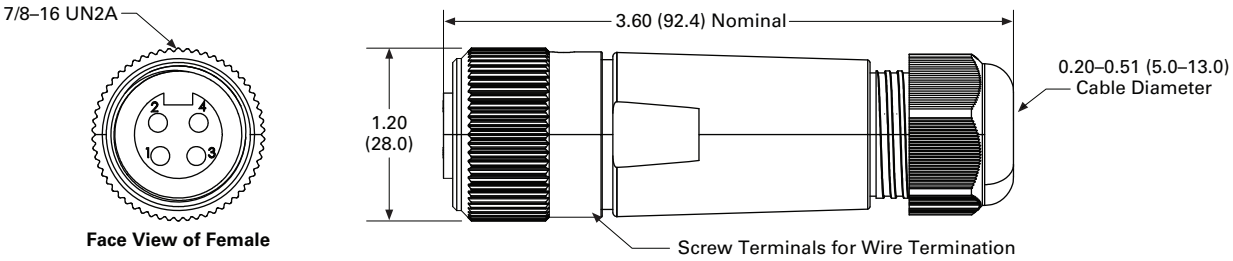

SWD4-SM4P-67

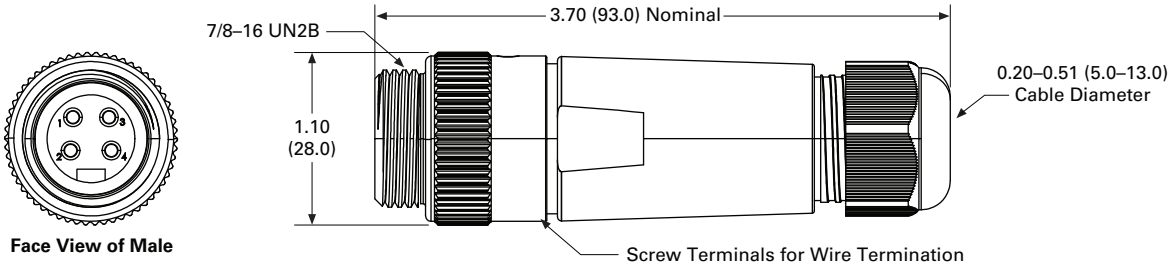

SWD4-SF4P-67R

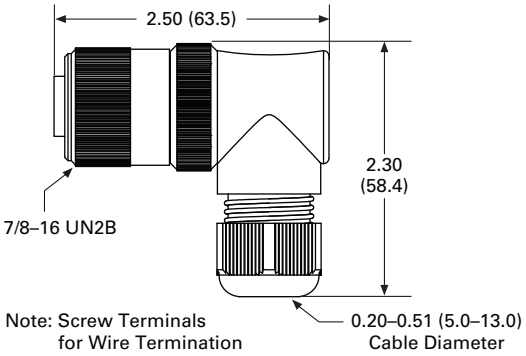

SWD4-SM4P-67R

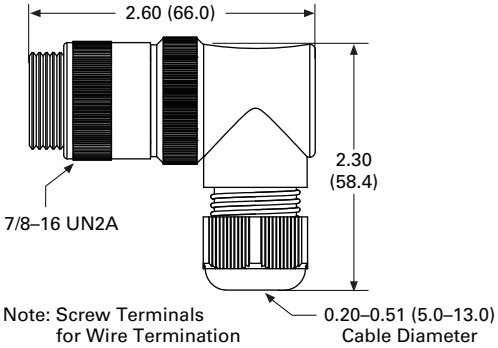

SWD4-SM5-67

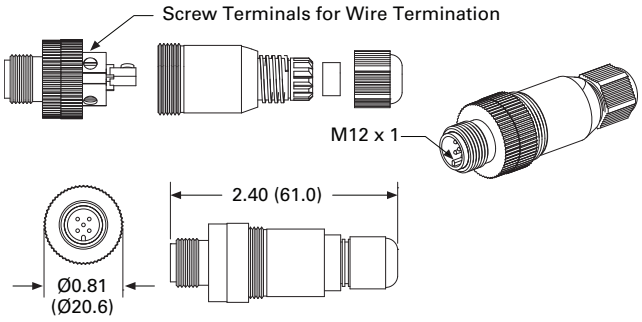

SWD4-SF5-67

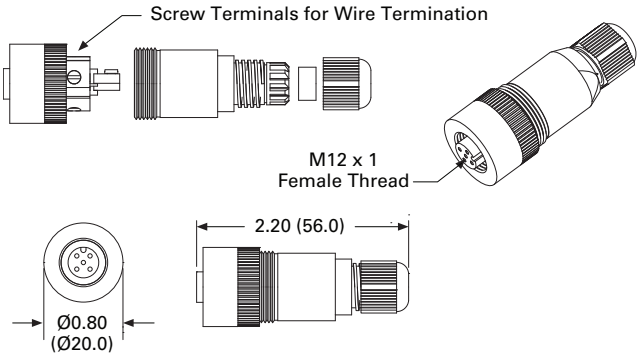

Approximate Dimensions in Inches (mm)

Splitters

SWD4-SP-4122/4124

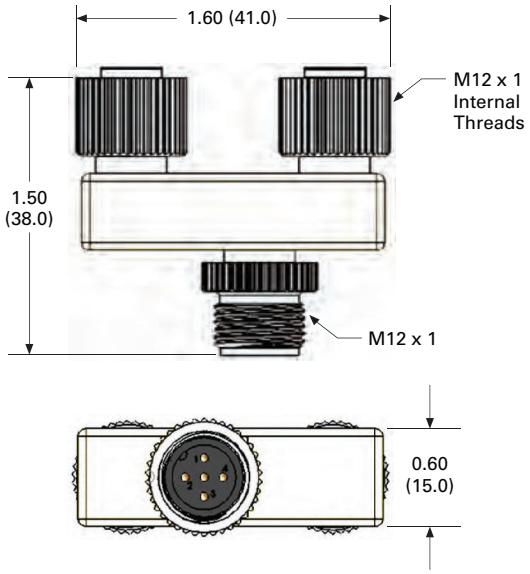

SWD4-SP-3084

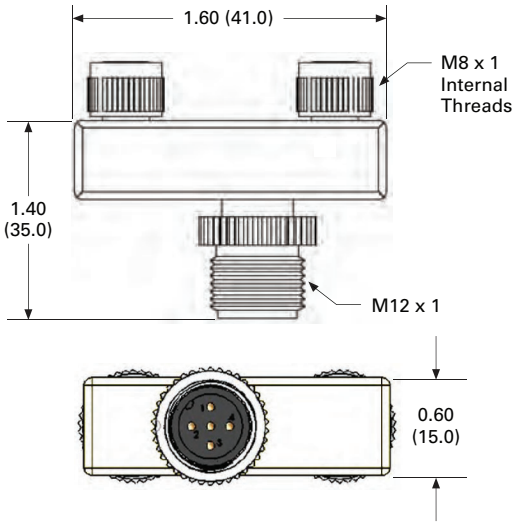

Other Wiring Accessories

SWD4-RC5-10

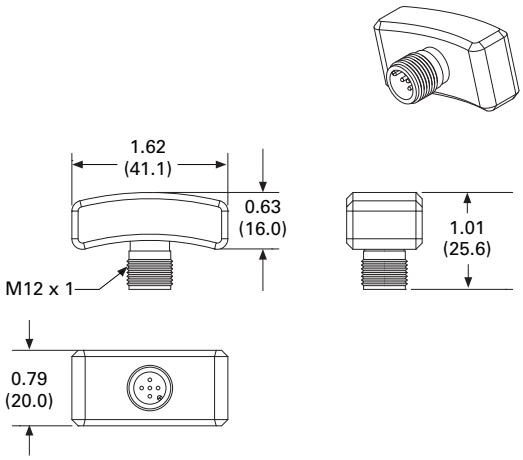

SWD4-ACAP-10

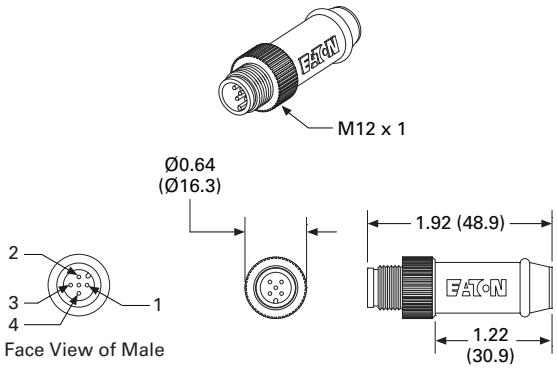

Approximate Dimensions in Inches (mm)

Cord Grips

V-M20

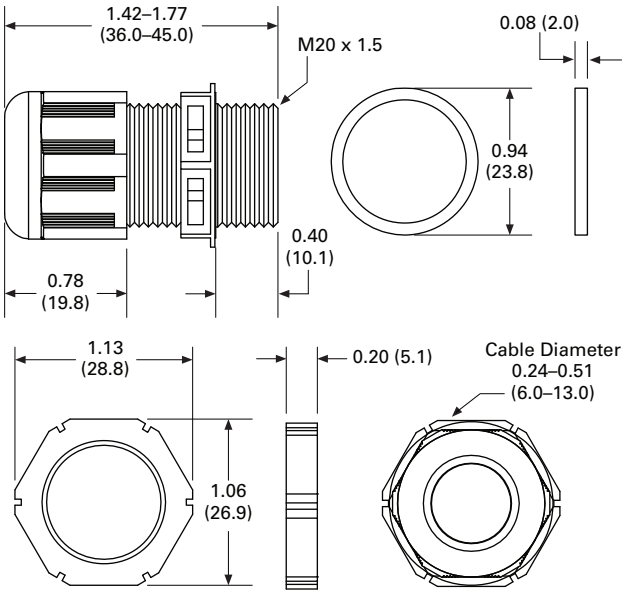

V-12NPT

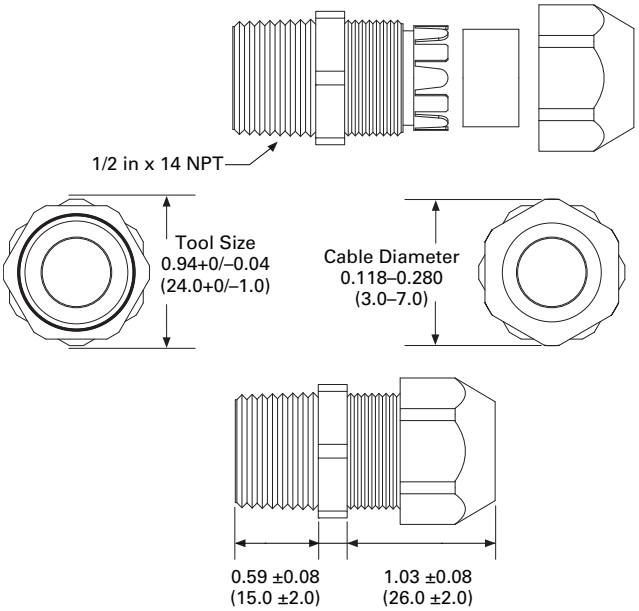

Hydraulic Valve Connector

EU3E-SWD-X1H-1

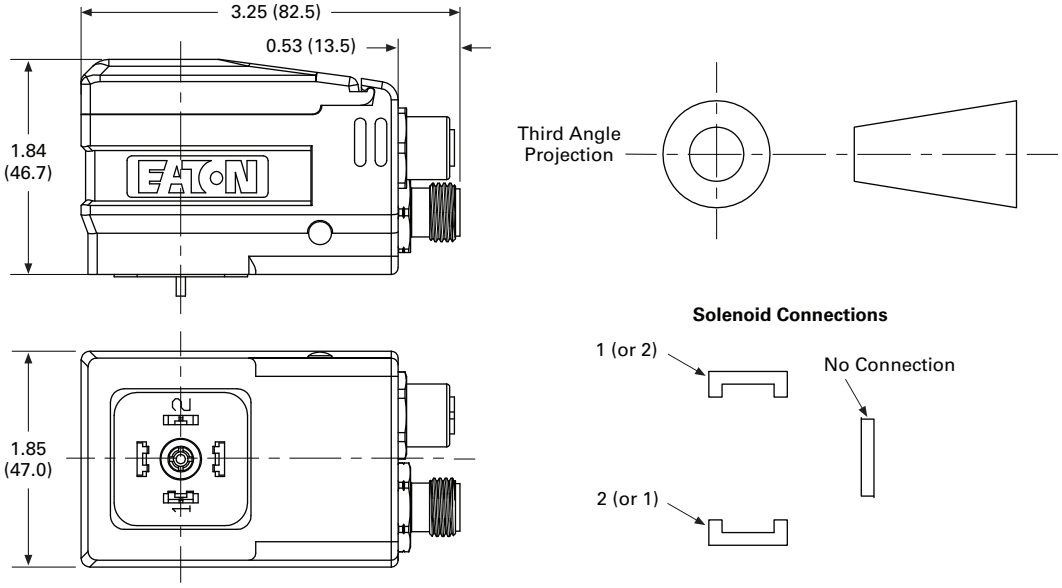

Effective Date: November 1, 2017

Eaton Terms & Conditions

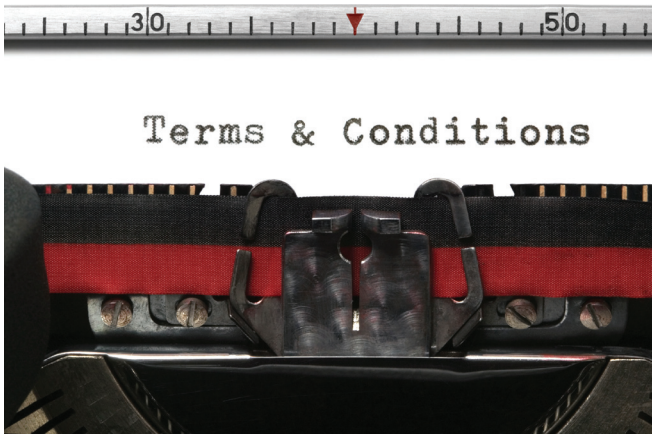

Contents

Description	*Page*
Terms and Conditions of Sale	**V7-A1-1**
Terms of Payment	**V7-A1-2**
Freight	**V7-A1-3**
Warranty	**V7-A1-3**

Selling Policy (Supersedes Selling Policy 25-000, dated November 1, 2008)

Terms and Conditions of Sale

The Terms and Conditions of Sale set forth herein, and any supplements which may be attached hereto, constitute the full and final expression of the contract for the sale of products or services (hereinafter referred to as Product(s) or Services by Eaton Corporation (hereinafter referred to as Seller) to the Buyer, and supersedes all prior quotations, purchase orders, correspondence or communications whether written or oral between the Seller and the Buyer. Notwithstanding any contrary language in the Buyer's purchase order, correspondence or other form of acknowledgment, Buyer shall be bound by these Terms and Conditions of Sale when it sends a purchase order or otherwise indicates acceptance of this contract, or when it accepts delivery from Seller of the Products or Services.

THE CONTRACT FOR SALE OF THE PRODUCTS OR SERVICES IS EXPRESSLY LIMITED TO THE TERMS AND CONDITIONS OF SALE STATED HEREIN. ANY ADDITIONAL OR DIFFERENT TERMS PROPOSED BY BUYER ARE REJECTED UNLESS EXPRESSLY AGREED TO IN WRITING BY SELLER. No contract shall exist except as herein provided.

Complete Agreement

No amendment or modification hereto nor any statement, representation or warranty not contained herein shall be binding on the Seller unless made in writing by an authorized representative of the Seller. Prior dealings, usage of the trade or a course of performance shall not be relevant to determine the meaning of this contract even though the accepting or acquiescing party had knowledge of the nature of the performance and opportunity for objection.

Quotations

Written quotations are valid for 30 days from its date unless otherwise stated in the quotation or terminated sooner by notice.

Verbal quotations, unless accepted, expire the same day they are made.

A complete signed order must be received by Seller within 20 calendar days of notification of award, otherwise the price and shipment will be subject to re-negotiation.

Termination and Cancellation

Products

Any order may be terminated by the Buyer only by written notice and upon payment of reasonable termination charges, including all progress billings and all incurred direct manufacturing costs.

Services

Any order may be terminated by the Buyer only by written notice and upon payment of reasonable termination charges including all costs plus profit.

Seller shall have the right to cancel any order at any time by written notice if Buyer breaches any of the terms hereof, becomes the subject of any proceeding under state or federal law for the relief of debtors, or otherwise becomes insolvent or bankrupt, generally does not pay its debts as they become due or makes an assignment for the benefit of creditors.

Effective Date: November 1, 2017

Prices

All prices are subject to change without notice. In the event of a price change, the effective date of the change will be the date of the new price or discount sheet, letter or telegram. All quotations made or orders accepted after the effective date will be on the new basis. For existing orders, the price of the unshipped portion of an order will be the price in effect at time of shipment.

Price Policy—Products and Services

When prices are quoted as firm for quoted shipment, they are firm provided the following conditions are met:

1. The order is released with complete engineering details.
2. Shipment of Products are made, and Services purchased are provided within the quoted lead time.
3. When drawings for approval are required for any Products, the drawings applicable to those Products must be returned within 30* calendar days from the date of the original mailing of the drawings by Seller. The return drawings must be released for manufacture and shipment and must be marked "APPROVED" or "APPROVED AS NOTED." Drawing re-submittals which are required for any other reason than to correct Seller errors will not extend the 30-day period.

   * 60 days for orders through contractors to allow time for their review and approval before and after transmitting them to their customers.

If the Buyer initiates or in any way causes delays in shipment, provision of Services or return of approval drawings beyond the periods stated above, the price of the Products or Services will be increased 1% per month or fraction thereof up to a maximum of 18 months from the date of the Buyer's order. For delays resulting in shipment or provision of Services beyond 18 months from the date of the Buyer's order, the price must be renegotiated.

Price Policy—BLS

Refer to Price Policy 25-050.

Minimum Billing

Orders less than $1,000 will be assessed a shipping and handling charge of 5% of the price of the order, with a minimum charge of $25.00 unless noted differently on Product discount sheets.

Taxes

The price does not include any taxes. Buyer shall be responsible for the payment of all taxes applicable to, or arising from the transaction, the Products, its sale, value, or use, or any Services performed in connection therewith regardless of the person or entity actually taxed.

Terms of Payment

Products

Acceptance of all orders is subject to the Buyer meeting Seller's credit requirements. Terms of payment are subject to change for failure to meet such requirements. Seller reserves the right at any time to demand full or partial payment before proceeding with a contract of sale as a result of changes in the financial condition of the Buyer. Terms of Payment are either Net 30 days from the date of invoice of each shipment or carry a cash discount based on Product type. Specific payment terms for Products are outlined in the applicable Product discount schedules.

Services

Terms of payment are net within 30 days from date of invoice for orders amounting to less than $50,000.00.

Terms of payment for orders exceeding $50,000.00 shall be made according to the following:

1. Twenty percent (20%) of order value with the purchase order payable 30 days from date of invoice.
2. Eighty percent (80%) of order value in equal monthly payments over the performance period payable 30 days from date of invoice.

Except for work performed (i) under a firm fixed price basis or (ii) pursuant to terms of a previously priced existing contract between Seller and Buyer, invoices for work performed by Seller shall have added and noted on each invoice a charge of 3% (over and above the price of the work) which is related to Seller compliance with present and proposed environmental, health, and safety regulations associated with prescribed requirements covering hazardous materials management and employee training, communications, personal protective equipment, documentation and record keeping associated therewith.

Adequate Assurances

If, in the judgment of Seller, the financial condition of the Buyer, at any time during the period of the contract, does not justify the terms of payment specified, Seller may require full or partial payment in advance.

Delayed Payment

If payments are not made in accordance with these terms, a service charge will, without prejudice to the right of Seller to immediate payment, be added in an amount equal to the lower of 1.5% per month or fraction thereof or the highest legal rate on the unpaid balance.

Freight

Freight policy will be listed on the Product discount sheets, or at option of Seller one of the following freight terms will be quoted.

F.O.B.—P/S—Frt./Ppd. and Invoiced

Products are sold F.O.B. point of shipment freight prepaid and invoiced to the Buyer.

F.O.B.—P/S—Frt./Ppd. and Allowed

Products sold are delivered F.O.B. point of shipment, freight prepaid and included in the price.

F.O.B. Destination—Frt./Ppd. and Allowed

At Buyer's option, Seller will deliver the Products F.O.B. destination freight prepaid and 2% will be added to the net price.

The term "freight prepaid" means that freight charges will be prepaid to the accessible common carrier delivery point nearest the destination for shipments within the United States and Puerto Rico unless noted differently on the Product discount sheets. For any other destination, contact Seller's representative.

Shipment and Routing

Seller shall select the point of origin of shipment, the method of transportation, the type of carrier equipment and the routing of the shipment.

If the Buyer specifies a special method of transportation, type of carrier equipment, routing, or delivery requirement, Buyer shall pay all special freight and handling charges.

When freight is included in the price, no allowance will be made in lieu of transportation if the Buyer accepts shipment at factory, warehouse, or freight station or otherwise supplies its own transportation.

Risk of Loss

Risk of loss or damage to the Products shall pass to Buyer at the F.O.B. point.

Concealed Damage

Except in the event of F.O.B. destination shipments, Seller will not participate in any settlement of claims for concealed damage.

When shipment has been made on an F.O.B. destination basis, the Buyer must unpack immediately and, if damage is discovered, must:

1. Not move the Products from the point of examination.
2. Retain shipping container and packing material.
3. Notify the carrier in writing of any apparent damage.
4. Notify Seller representative within 72 hours of delivery.
5. Send Seller a copy of the carrier's inspection report.

Witness Tests/Customer Inspection

Standard factory tests may be witnessed by the Buyer at Seller's factory for an additional charge calculated at the rate of $2,500 per day (not to exceed eight (8) hours) per Product type. Buyer may final inspect Products at the Seller's factory for $500 per day per Product type.

Witness tests will add one (1) week to the scheduled shipping date. Seller will notify Buyer fourteen (14) calendar days prior to scheduled witness testing or inspection. In the event Buyer is unable to attend, the Parties shall mutually agree on a rescheduled date. However, Seller reserves the right to deem the witness tests waived with the right to ship and invoice Products.

Held Orders

For any order held, delayed or rescheduled at the request of the Buyer, Seller may, at its sole option (1) require payment to be based on any reasonable basis, including but not limited to the contract price, and any additional expenses, or cost resulting from such a delay; (2) store Products at the sole cost and risk of loss of the Buyer; and/or (3) charge to the Buyer those prices under the applicable price policy. Payment for such price, expenses and costs, in any such event, shall be due by Buyer within thirty (30) days from date of Seller's invoice. Any order so held delayed or rescheduled beyond six (6) months will be treated as a Buyer termination.

Drawing Approval

Seller will design the Products in line with, in Seller's judgment, good commercial practice. If at drawing approval Buyer makes changes outside of the design as covered in their specifications, Seller will then be paid reasonable charges and allowed a commensurate delay in shipping date based on the changes made.

Drawing Re-Submittal

When Seller agrees to do so in its quotation, Seller shall provide Buyer with the first set of factory customer approval drawing(s) at Seller's expense. The customer approval drawing(s) will be delivered at the quoted delivery date. If Buyer requests drawing changes or additions after the initial factory customer approval drawing(s) have been submitted by Seller, the Seller, at its option, may assess Buyer drawing charges. Factory customer approval drawing changes required due to misinterpretation by Seller will be at Seller's expense. Approval drawings generated by Bid Manager are excluded from this provision.

Warranty

Warranty for Products

Seller warrants that the Products manufactured by it will conform to Seller's applicable specifications and be free from failure due to defects in workmanship and material for one (1) year from the date of installation of the Product or eighteen (18) months from the date of shipment of the Product, whichever occurs first.

In the event any Product fails to comply with the foregoing warranty, Seller will, at its option, either (a) repair or replace the defective Product, or defective part or component thereof, F.O.B. Seller's facility freight prepaid, or (b) credit Buyer for the purchase price of the Product. All warranty claims shall be made in writing.

Seller requires all non-conforming Products be returned at Seller's expense for evaluation unless specifically stated otherwise in writing by Seller.

This warranty does not cover failure or damage due to storage, installation, operation or maintenance not in conformance with Seller's recommendations and industry standard practice or due to accident, misuse, abuse or negligence. This warranty does not cover reimbursement for labor, gaining access, removal, installation, temporary power or any other expenses, which may be incurred in connection with repair or replacement.

This warranty does not apply to equipment not manufactured by Seller. Seller limits itself to extending the same warranty it receives from the supplier.

Effective Date: November 1, 2017

Extended Warranty for Products

If requested by the Buyer and specifically accepted in writing by Seller, the foregoing standard warranty for Products will be extended from the date of shipment for the period and price indicated below:

- 24 months—2% of Contract Price
- 30 months—3% of Contract Price
- 36 months—4% of Contract Price

Special Warranty (In and Out) for Products

If requested by the Buyer and specifically accepted in writing by Seller, Seller will, during the warranty period for Products, at an additional cost of 2% of the contract price, be responsible for the direct cost of:

1. Removing the Product from the installed location.
2. Transportation to the repair facility and return to the site.
3. Reinstallation on site.

The total liability of Seller for this Special Warranty for Products is limited to 50% of the contract price of the particular Product being repaired and excludes expenses for removing adjacent apparatus, walls, piping, structures, temporary service, etc.

Warranty for Services

Seller warrants that the Services performed by it hereunder will be performed in accordance with generally accepted professional standards.

The Services, which do not so conform, shall be corrected by Seller upon notification in writing by the Buyer within one (1) year after completion of the Services.

Unless otherwise agreed to in writing by Seller, Seller assumes no responsibility with respect to the suitability of the Buyer's, or its customer's, equipment or with respect to any latent defects in equipment not supplied by Seller. This warranty does not cover damage to Buyer's, or its customer's, equipment, components or parts resulting in whole or in part from improper maintenance or operation or from their deteriorated condition. Buyer will, at its cost, provide Seller with unobstructed access to the defective Services, as well as adequate free working space in the immediate vicinity of the defective Services and such facilities and systems, including, without limitation, docks, cranes and utility disconnects and connects, as may be necessary in order that Seller may perform its warranty obligations. The conducting of any tests shall be mutually agreed upon and Seller shall be notified of, and may be present at, all tests that may be made.

Warranty for Power Systems Studies

Seller warrants that any power systems studies performed by it will conform to generally accepted professional standards. Any portion of the study, which does not so conform, shall be corrected by Seller upon notification in writing by the Buyer within six (6) months after completion of the study. All warranty work shall be performed in a single shift straight time basis Monday through Friday. In the event that the study requires correction of warranty items on an overtime schedule, the premium portion of such overtime shall be for the Buyer's account.

Limitation on Warranties for Products, Services and Power Systems Studies

THE FOREGOING WARRANTIES ARE EXCLUSIVE EXCEPT FOR WARRANTY OF TITLE. SELLER DISCLAIMS ALL OTHER WARRANTIES INCLUDING ANY IMPLIED WARRANTIES OF MERCHANTABILITY AND FITNESS FOR A PARTICULAR PURPOSE.

CORRECTION OF NON-CONFORMITIES IN THE MANNER AND FOR THE PERIOD OF TIME PROVIDED ABOVE SHALL CONSTITUTE SELLER'S SOLE LIABILITY AND BUYER'S EXCLUSIVE REMEDY FOR FAILURE OF SELLER TO MEET ITS WARRANTY OBLIGATIONS, WHETHER CLAIMS OF THE BUYER ARE BASED IN CONTRACT, IN TORT (INCLUDING NEGLIGENCE OR STRICT LIABILITY), OR OTHERWISE.

Asbestos

Federal Law requires that building or facility owners identify the presence, location and quantity of asbestos containing material (hereinafter "ACM") at work sites. Seller is not licensed to abate ACM. Accordingly, for any contract which includes the provision of Services, prior to (i) commencement of work at any site under a specific Purchase Order, (ii) a change in the work scope of any Purchase Order, the Buyer will certify that the work area associated with the Seller's scope of work includes the handling of Class II ACM, including but not limited to generator wedges and high temperature gaskets which include asbestos materials. The Buyer shall, at its expense, conduct abatement should the removal, handling, modification or reinstallation, or some or all of them, of said Class II ACM be likely to generate airborne asbestos fibers; and should such abatement affect the cost of or time of performance of the work, then Seller shall be entitled to an equitable adjustment in the schedule, price and other pertinent affected provisions of the contract.

Compliance with Nuclear Regulation

Seller's Products are sold as commercial grade Products not intended for application in facilities or activities licensed by the United States Nuclear Regulatory Commission for atomic purposes. Further certification will be required for use of the Products in any safety-related application in any nuclear facility licensed by the U.S. Nuclear Regulatory Commission.

Returning Products

Authorization and shipping instructions for the return of any Products must be obtained from Seller before returning the Products.

When return is occasioned due to Seller error, full credit including all transportation charges will be allowed.

Product Notices

Buyer shall provide the user (including its employees) of the Products with all Seller supplied Product notices, warnings, instructions, recommendations, and similar materials.

Force Majeure

Seller shall not be liable for failure to perform or delay in performance due to fire, flood, strike or other labor difficulty, act of God, act of any governmental authority or of the Buyer, riot, embargo, fuel or energy shortage, car shortage, wrecks or delays in transportation, or due to any other cause beyond Seller's reasonable control. In the event of delay in performance due to any such cause, the date of delivery or time for completion will be extended by a period of time reasonably necessary to overcome the effect of such delay.

Liquidated Damages

Contracts which include liquidated damage clauses for failure to meet shipping or job completion promises are not acceptable or binding on Seller, unless such clauses are specifically accepted in writing by an authorized representative of the Seller at its headquarters office.

Patent Infringement

Seller will defend or, at its option, settle any suit or proceeding brought against Buyer, or Buyer's customers, to the extent it is based upon a claim that any Product or part thereof, manufactured by Seller or its subsidiaries and furnished hereunder, infringes any United States patent, other than a claim of infringement based upon use of a Product or part thereof in a process, provided Seller is notified in reasonable time and given authority, information and assistance (at Seller's expense) for the defense of same. Seller shall pay all legal and court costs and expenses and court-assessed damages awarded therein against Buyer resulting from or incident to such suit or proceeding. In addition to the foregoing, if at any time Seller determines there is a substantial question of infringement of any United States patent, and the use of such Product is or may be enjoined, Seller may, at its option and expense: either (a) procure for Buyer the right to continue using and selling the Product; (b) replace the Product with non-infringing apparatus; (c) modify the Product so it becomes non-infringing; or (d) as a last resort, remove the Product and refund the purchase price, equitably adjusted for use and obsolescence. In no case does Seller agree to pay any recovery based upon its Buyer's savings or profit through use of Seller's Products whether the use be special or ordinary. The foregoing states the entire liability of Seller for patent infringement.

The preceding paragraph does not apply to any claim of infringement based upon: (a) any modification made to a Product other than by Seller; (b) any design and/or specifications of Buyer to which a Product was manufactured; or (c) the use or combination of Product with other products where the Product does not itself infringe. As to the above-identified claim situations where the preceding paragraph does not apply, Buyer shall defend and hold Seller harmless in the same manner and to the extent as Seller's obligations described in the preceding paragraph. Buyer shall be responsible for obtaining (at Buyer's expense) all license rights required for Seller to be able to use software products in the possession of Buyer where such use is required in order to perform any Service for Buyer.

With respect to a Product or part thereof not manufactured by Seller or its subsidiaries, Seller will attempt to obtain for Buyer, from the supplier(s), the patent indemnification protection normally provided by the supplier(s) to customers.

Compliance with OSHA

Seller offers no warranty and makes no representation that its Products comply with the provisions or standards of the Occupational Safety and Health Act of 1970, or any regulation issued thereunder. In no event shall Seller be liable for any loss, damage, fines, penalty or expenses arising under said Act.

Limitation of Liability

THE REMEDIES OF THE BUYER SET FORTH IN THIS CONTRACT ARE EXCLUSIVE AND ARE ITS SOLE REMEDIES FOR ANY FAILURE OF SELLER TO COMPLY WITH ITS OBLIGATIONS HEREUNDER.

NOTWITHSTANDING ANY PROVISION IN THIS CONTRACT TO THE CONTRARY, IN NO EVENT SHALL SELLER BE LIABLE IN CONTRACT, IN TORT (INCLUDING NEGLIGENCE OR STRICT LIABILITY) OR OTHERWISE FOR DAMAGE TO PROPERTY OR EQUIPMENT OTHER THAN PRODUCTS SOLD HEREUNDER, LOSS OF PROFITS OR REVENUE, LOSS OF USE OF PRODUCTS, COST OF CAPITAL, CLAIMS OF CUSTOMERS OF THE BUYER OR ANY SPECIAL, INDIRECT, INCIDENTAL OR CONSEQUENTIAL DAMAGES WHATSOEVER, REGARDLESS OF WHETHER SUCH POTENTIAL DAMAGES ARE FORESEEABLE OR IF SELLER HAS BEEN ADVISED OF THE POSSIBILITY OF SUCH DAMAGES.

THE TOTAL CUMULATIVE LIABILITY OF SELLER ARISING FROM OR RELATED TO THIS CONTRACT WHETHER THE CLAIMS ARE BASED IN CONTRACT, IN TORT (INCLUDING NEGLIGENCE OR STRICT LIABILITY) OR OTHERWISE, SHALL NOT EXCEED THE PRICE OF THE PRODUCT OR SERVICES ON WHICH SUCH LIABILITY IS BASED.

A

APP V7-**T5**-17
AR V7-**T3**-154
ARA. V7-**T3**-155
ARC. V7-**T3**-154
ARD. V7-**T3**-154, V7-**T3**-155
ARM V7-**T3**-155
ARO. V7-**T3**-154
ARS V7-**T3**-155

B

BF V7-**T3**-148, V7-**T3**-149
BFD V7-**T3**-148, V7-**T3**-149
BFM V7-**T3**-150

C

CE0 . . . . . V7-**T7**-19, V7-**T7**-20
CE1 . . . . . V7-**T7**-20
CE2 . . . . . V7-**T7**-20
CE3 . . . . . V7-**T7**-20
CE5 . . . . . V7-**T7**-20
CHCP. V7-**T8**-124
CHD. V7-**T8**-116
CH16 . . . . . V7-**T8**-122
CSDR. V7-**T9**-48
CSDS. V7-**T9**-48
C0 . . . . . V7-**T7**-14
C00 . . . . . V7-**T7**-5–V7-**T7**-9, V7-**T7**-26
C01 . . . . . V7-**T7**-5–V7-**T7**-9
C02 . . . . . V7-**T7**-5–V7-**T7**-9
C03 . . . . . V7-**T7**-5–V7-**T7**-9
C05 . . . . . V7-**T7**-5–V7-**T7**-9
C07 . . . . . V7-**T7**-5–V7-**T7**-8
C1 . . . . . V7-**T7**-14
C10 . . . . . V7-**T7**-5–V7-**T7**-7
C15 . . . . . V7-**T7**-5–V7-**T7**-7
C2 . . . . . V7-**T7**-14
C22 . . . . . V7-**T1**-141–V7-**T1**-148
C22-L. V7-**T1**-150
C22-P. V7-**T1**-152, V7-**T1**-153
C22S V7-**T1**-141–V7-**T1**-148
C22S-W. V7-**T1**-155–V7-**T1**-158
C22-W V7-**T1**-155–V7-**T1**-158
C3 . . . . . V7-**T7**-14
C320 . . . . . V7-**T3**-143, V7-**T3**-144
C321 . . . . . V7-**T3**-144
C350 . . . . . V7-**T8**-130
C381 . . . . . V7-**T8**-106, V7-**T8**-107
C383 . . . . . V7-**T8**-128
C5 . . . . . V7-**T7**-14

D

DA1 . . . . . V7-**T9**-33
DC1 . . . . . V7-**T9**-31
DIL-SWD V7-**T9**-25
D1RA V7-**T3**-54
D1RF V7-**T3**-54
D15C V7-**T3**-143
D2PA V7-**T3**-60
D2PJ V7-**T3**-60, V7-**T3**-116
D2PR V7-**T3**-59
D26 . . . . . V7-**T3**-164, V7-**T3**-165
D26M. V7-**T3**-159–V7-**T3**-161
D3PA V7-**T3**-70, V7-**T3**-177, V7-**T3**-180, V7-**T3**-184, V7-**T3**-189
D3PF V7-**T3**-69
D3PJ V7-**T3**-70, V7-**T3**-83, V7-**T3**-116
D4PA V7-**T3**-77
D4PR V7-**T3**-77
D5PA V7-**T3**-83, V7-**T3**-177
D5PF V7-**T3**-82
D5PR V7-**T3**-82
D65C V7-**T3**-180, V7-**T3**-184, V7-**T3**-189
D7PA V7-**T3**-92
D8PA V7-**T3**-104
D8PR V7-**T3**-104
D851 . . . . . V7-**T3**-189
D852 . . . . . V7-**T3**-189
D9PR V7-**T3**-109
D93 . . . . . V7-**T3**-124
D96 . . . . . V7-**T3**-131
D99 . . . . . V7-**T3**-136

E

EASY V7-**T3**-23, V7-**T3**-31, V7-**T3**-40, V7-**T3**-43, V7-**T3**-45, V7-**T6**-27
EASY-LINK. V7-**T3**-45
EASY-NT V7-**T4**-37
EASYSOFT. V7-**T3**-44
EASY802 . . . . . V7-**T9**-13
EASY806 . . . . . V7-**T9**-13
ELC V7-**T4**-11–V7-**T4**-15, V7-**T5**-7–V7-**T5**-9, V7-**T5**-17, V7-**T6**-24
ELC-AC V7-**T4**-17
ELC-ACC V7-**T4**-18
ELC-BAT V7-**T4**-18
ELC-CB V7-**T4**-17
ELC-IO V7-**T4**-18
ELCM. V7-**T4**-4, V7-**T4**-5
ELC-PS. V7-**T4**-17
ELCSOFT V7-**T4**-16
ELC-SP. V7-**T4**-18
ELC2 . . . . . V7-**T4**-9, V7-**T4**-10

EMS V7-**T9**-26
ESR5 . . . . . V7-**T3**-194
ES16 . . . . . V7-**T1**-41
ES4P V7-**T3**-200EU1EV7-**T9**-43
EU4A-RJ45 . . . . . V7-**T4**-37
EU5 . . . . . V7-**T9**-11
EU5C V7-**T9**-11, V7-**T9**-15
EU5E V7-**T9**-15
E01 . . . . . V7-**T1**-40
E10 . . . . . V7-**T1**-40
E10E V7-**T1**-4, V7-**T1**-5, V7-**T1**-9
E10P V7-**T1**-5
E10T V7-**T1**-4, V7-**T1**-5, V7-**T1**-9
E22B V7-**T2**-40
E22C V7-**T1**-175, V7-**T1**-229, V7-**T1**-280
E22L V7-**T1**-239, V7-**T1**-271, V7-**T1**-343
E26B V7-**T2**-36, V7-**T2**-38, V7-**T2**-39
E26S V7-**T2**-37, V7-**T2**-38, V7-**T2**-40
E26X V7-**T2**-35
E29K V7-**T1**-229
E30A V7-**T1**-166, V7-**T1**-167
E30B V7-**T1**-167
E30C V7-**T1**-167
E30D V7-**T1**-168
E30E V7-**T1**-168
E30J V7-**T1**-168
E30K V7-**T1**-169–V7-**T1**-175, V7-**T1**-178, V7-**T1**-229
E34A V7-**T1**-277, V7-**T1**-351
E34C V7-**T1**-262, V7-**T1**-264, V7-**T1**-270, V7-**T1**-333, V7-**T1**-336, V7-**T1**-342
E34E V7-**T1**-260, V7-**T1**-261, V7-**T1**-328
E34EX V7-**T1**-23, V7-**T1**-324, V7-**T1**-325, V7-**T1**-327, V7-**T1**-330, V7-**T1**-331, V7-**T1**-335–V7-**T1**-339, V7-**T1**-344, V7-**T1**-345
E34F V7-**T1**-260, V7-**T1**-262, V7-**T1**-284, V7-**T1**-332, V7-**T1**-333
E34G V7-**T1**-263–V7-**T1**-268, V7-**T1**-332, V7-**T1**-334, V7-**T1**-340
E34H V7-**T1**-263, V7-**T1**-334
E34J V7-**T1**-260, V7-**T1**-261, V7-**T1**-264, V7-**T1**-270, V7-**T1**-329, V7-**T1**-336, V7-**T1**-342
E34K V7-**T1**-276, V7-**T1**-277, V7-**T1**-350, V7-**T1**-351
E34L V7-**T1**-202, V7-**T1**-260, V7-**T1**-261, V7-**T1**-267, V7-**T1**-277, V7-**T1**-281, V7-**T1**-282, V7-**T1**-329, V7-**T1**-351
E34M. V7-**T1**-265, V7-**T1**-270, V7-**T1**-337, V7-**T1**-342
E34N V7-**T1**-233, V7-**T1**-262, V7-**T1**-283, V7-**T1**-333, V7-**T1**-356
E34P V7-**T1**-260, V7-**T1**-261, V7-**T1**-263, V7-**T1**-267, V7-**T1**-282, V7-**T1**-328
E34R V7-**T1**-260, V7-**T1**-262, V7-**T1**-282, V7-**T1**-332, V7-**T1**-333
E34S V7-**T1**-262, V7-**T1**-278, V7-**T1**-281, V7-**T1**-282, V7-**T1**-333, V7-**T1**-353
E34T. V7-**T1**-260, V7-**T1**-262, V7-**T1**-279, V7-**T1**-280, V7-**T1**-332, V7-**T1**-333
E34V V7-**T1**-263, V7-**T1**-272, V7-**T1**-276, V7-**T1**-278, V7-**T1**-330, V7-**T1**-331, V7-**T1**-334, V7-**T1**-350, V7-**T1**-353
E34X V7-**T1**-262, V7-**T1**-333
E8. . . . . V7-**T1**-40

F

FAK V7-**T1**-109, V7-**T1**-110
FSK V7-**T7**-10, V7-**T7**-21

H

HMI V7-**T5**-15–V7-**T5**-17
HMIVU V7-**T5**-15
HT8A V7-**T1**-298, V7-**T1**-299, V7-**T1**-311, V7-**T1**-314
HT8B V7-**T1**-314, V7-**T1**-315
HT8C V7-**T1**-298, V7-**T1**-306, V7-**T1**-314
HT8D V7-**T1**-306, V7-**T1**-314
HT8E V7-**T1**-314
HT8F V7-**T1**-298, V7-**T1**-307, V7-**T1**-311
HT8G V7-**T1**-298, V7-**T1**-300–V7-**T1**-305, V7-**T1**-311
HT8H V7-**T1**-304, V7-**T1**-305
HT8J V7-**T1**-298, V7-**T1**-308, V7-**T1**-309
HT8L V7-**T1**-309, V7-**T1**-311–V7-**T1**-313, V7-**T1**-315
HT8P V7-**T1**-312
HT8R V7-**T1**-312
HT8S V7-**T1**-312, V7-**T1**-313
HT8W. V7-**T1**-311
HT8X V7-**T1**-311

I

ISH V7-**T1**-40
I8 . . . . . V7-**T1**-40

L

LEDWB V7-**T1**-40
LIC-OPT V7-**T4**-66, V7-**T5**-31

M

MC V7-**T8**-111
MFD. V7-**T3**-35, V7-**T3**-44
MOD V7-**T3**-54, V7-**T3**-60, V7-**T3**-70, V7-**T3**-83, V7-**T3**-92, V7-**T3**-113
M22-A V7-**T1**-106, V7-**T1**-108, V7-**T1**-112, V7-**T1**-117
M22-B V7-**T1**-117
M22-C V7-**T1**-16, V7-**T1**-55, V7-**T1**-57, V7-**T1**-59, V7-**T1**-61, V7-**T1**-65, V7-**T1**-67, V7-**T1**-69, V7-**T1**-71, V7-**T1**-77, V7-**T1**-83, V7-**T1**-87, V7-**T1**-91, V7-**T1**-95, V7-**T1**-97, V7-**T1**-101, V7-**T1**-103, V7-**T1**-105, V7-**T1**-110, V7-**T1**-112, V7-**T1**-113
M22-D V7-**T1**-51, V7-**T1**-53–V7-**T1**-71, V7-**T1**-94–V7-**T1**-97, V7-**T1**-99, V7-**T1**-100, V7-**T1**-103, V7-**T1**-107
M22-E V7-**T1**-77, V7-**T1**-91, V7-**T1**-116

M22-G V7-**T1**-117
M22G-X V7-**T1**-77, V7-**T1**-117
M22-H V7-**T1**-116
M22-I V7-**T1**-116, V7-**T1**-117, V7-**T9**-37
M22-K V7-**T1**-55, V7-**T1**-57, V7-**T1**-59, V7-**T1**-61, V7-**T1**-65, V7-**T1**-67, V7-**T1**-69, V7-**T1**-71, V7-**T1**-77, V7-**T1**-83, V7-**T1**-87, V7-**T1**-91, V7-**T1**-95, V7-**T1**-97, V7-**T1**-101, V7-**T1**-103, V7-**T1**-105, V7-**T1**-110, V7-**T1**-112, V7-**T1**-117
M22-L V7-**T1**-51, V7-**T1**-65, V7-**T1**-67, V7-**T1**-69, V7-**T1**-71–V7-**T1**-73, V7-**T1**-77, V7-**T1**-87, V7-**T1**-101, V7-**T1**-112, V7-**T1**-113
M22-M V7-**T1**-117
M22M-D V7-**T1**-53–V7-**T1**-71, V7-**T1**-94–V7-**T1**-97
M22M-W V7-**T1**-80–V7-**T1**-91
M22-P V7-**T1**-51, V7-**T1**-75–V7-**T1**-77
M22-R V7-**T1**-106, V7-**T1**-107
M22S-B V7-**T1**-117
M22S-D V7-**T1**-53–V7-**T1**-71, V7-**T1**-94–V7-**T1**-97, V7-**T1**-99, V7-**T1**-100, V7-**T1**-103
M22S-R V7-**T1**-106, V7-**T1**-117
M22S-S V7-**T1**-114, V7-**T1**-115
M22S-T V7-**T1**-68
M22S-W V7-**T1**-80–V7-**T1**-91, V7-**T1**-104
M22-SWD V7-**T9**-35
M22-T V7-**T1**-68, V7-**T1**-117
M22-U V7-**T1**-116
M22-W V7-**T1**-51, V7-**T1**-80–V7-**T1**-91, V7-**T1**-104
M22-X V7-**T1**-55, V7-**T1**-57, V7-**T1**-59, V7-**T1**-61, V7-**T1**-65, V7-**T1**-67, V7-**T1**-69, V7-**T1**-71, V7-**T1**-73, V7-**T1**-77, V7-**T1**-83, V7-**T1**-87, V7-**T1**-91, V7-**T1**-95, V7-**T1**-97, V7-**T1**-106, V7-**T1**-107, V7-**T1**-111–V7-**T1**-117
M22(S) V7-**T1**-118

P

PFC V7-**T3**-54, V7-**T3**-60, V7-**T3**-92, V7-**T3**-117
PFK V7-**T7**-10
PFP V7-**T3**-54, V7-**T3**-60, V7-**T3**-70, V7-**T3**-83, V7-**T3**-92, V7-**T3**-104
PKE-SWD V7-**T9**-25
PMC V7-**T3**-54, V7-**T3**-92, V7-**T3**-114, V7-**T3**-115
PQC V7-**T3**-60, V7-**T3**-70, V7-**T3**-83, V7-**T3**-92, V7-**T3**-114, V7-**T3**-115
PSG V7-**T6**-5
PSS V7-**T6**-34
PS2 . . . . . V7-**T6**-31
PWC V7-**T3**-60, V7-**T3**-115
PWF V7-**T3**-70, V7-**T3**-83, V7-**T3**-116
PYC V7-**T3**-60, V7-**T3**-92

Q

Q18B V7-**T1**-40
Q18D V7-**T1**-32
Q18DR V7-**T1**-32
Q18LF V7-**T1**-34
Q18LH V7-**T1**-34
Q18LT V7-**T1**-33
Q18LTR V7-**T1**-33
Q18S1 . . . . . V7-**T1**-38, V7-**T1**-39
Q18S3 . . . . . V7-**T1**-38, V7-**T1**-39
Q18S3R V7-**T1**-38
Q18WK V7-**T1**-36
Q25A V7-**T1**-40
Q25B V7-**T1**-40
Q25D V7-**T1**-32
Q25DR V7-**T1**-32
Q25LF V7-**T1**-34
Q25LH V7-**T1**-34
Q25LPV V7-**T1**-35
Q25LT V7-**T1**-33
Q25LTR V7-**T1**-33
Q25PV V7-**T1**-35
Q25S1 . . . . . V7-**T1**-38, V7-**T1**-39
Q25S3 . . . . . V7-**T1**-38, V7-**T1**-39
Q25S3R V7-**T1**-39
Q25TS V7-**T1**-41
Q25WK V7-**T1**-36

S

SFC V7-**T7**-10, V7-**T7**-21
SKF V7-**T3**-45
SL4-AP V7-**T2**-16
SL4-BL V7-**T2**-15
SL4-FL V7-**T2**-15, V7-**T2**-16
SL4-FMS V7-**T2**-18
SL4-L V7-**T2**-14, V7-**T2**-16, V7-**T2**-19
SL4-PIB V7-**T2**-17, V7-**T2**-18
SL4-SWD V7-**T2**-18
SL4-100 . . . . . V7-**T2**-14
SL7-AP V7-**T2**-9
SL7-BL V7-**T2**-7
SL7-CB V7-**T2**-10, V7-**T2**-11
SL7-FL V7-**T2**-7, V7-**T2**-8
SL7-FMS V7-**T2**-11, V7-**T9**-56, V7-**T9**-57
SL7-L V7-**T2**-6, V7-**T2**-8, V7-**T2**-19
SL7-SWD V7-**T2**-11
SL7-100 . . . . . V7-**T2**-6
SL7/4 . . . . . V7-**T2**-19
SQT V7-**T1**-41
SRA V7-**T1**-40
SRT V7-**T1**-41
SWD4 . . . . . V7-**T9**-16, V7-**T9**-17, V7-**T9**-46
SW-GALILEO . . . V7-**T5**-37
SW-XSOFT V7-**T4**-38, V7-**T4**-58, V7-**T4**-62, V7-**T5**-38, V7-**T9**-12

T

TA V7-**T8**-111
TB V7-**T8**-110, V7-**T8**-111, V7-**T8**-124, V7-**T8**-131
TBAN. V7-**T8**-124
TBLP V7-**T8**-131
TBP V7-**T8**-131
TJ V7-**T8**-111
TM. V7-**T8**-111
TMRP V7-**T3**-186
TMR5 . . . . . V7-**T3**-180
TMR6 . . . . . V7-**T3**-184
TRF V7-**T3**-177
TRL V7-**T3**-173
TRN V7-**T3**-177
TRW V7-**T3**-173

V

V-M20 . . . . . V7-**T1**-116
VS V7-**T1**-40

W

WBG V7-**T1**-40
WBLED V7-**T1**-40
WMR. V7-**T8**-130
WM63 . . . . . V7-**T8**-130
WRR V7-**T8**-130
WR23 . . . . . V7-**T8**-130
WR26 . . . . . V7-**T8**-130
WR63 . . . . . V7-**T8**-130
WR66 . . . . . V7-**T8**-130
W23. . . . . V7-**T8**-130
W26. . . . . V7-**T8**-130
W63. . . . . V7-**T8**-130
W66. . . . . V7-**T8**-130

X

XBAC. V7-**T8**-7, V7-**T8**-11, V7-**T8**-13, V7-**T8**-15, V7-**T8**-17, V7-**T8**-26, V7-**T8**-30, V7-**T8**-34, V7-**T8**-38, V7-**T8**-40, V7-**T8**-43, V7-**T8**-45, V7-**T8**-47, V7-**T8**-52, V7-**T8**-55, V7-**T8**-57, V7-**T8**-60, V7-**T8**-69, V7-**T8**-71, V7-**T8**-74, V7-**T8**-76, V7-**T8**-78, V7-**T8**-80
XBAD. V7-**T8**-26
XBAE V7-**T8**-19, V7-**T8**-28, V7-**T8**-91
XBAF V7-**T8**-7, V7-**T8**-11, V7-**T8**-13, V7-**T8**-15, V7-**T8**-17, V7-**T8**-23, V7-**T8**-26, V7-**T8**-28, V7-**T8**-30, V7-**T8**-34, V7-**T8**-38, V7-**T8**-40, V7-**T8**-45, V7-**T8**-47, V7-**T8**-49, V7-**T8**-52, V7-**T8**-55, V7-**T8**-57, V7-**T8**-60, V7-**T8**-63, V7-**T8**-69, V7-**T8**-71, V7-**T8**-74, V7-**T8**-76, V7-**T8**-78, V7-**T8**-80, V7-**T8**-94
XBAN. V7-**T3**-144, V7-**T8**-92, V7-**T8**-93
XBAP V7-**T8**-62–V7-**T8**-66
XBAR. V7-**T8**-8, V7-**T8**-35
XBAS V7-**T8**-13, V7-**T8**-15, V7-**T8**-40, V7-**T8**-43, V7-**T8**-60, V7-**T8**-71, V7-**T8**-78, V7-**T8**-80
XBAT V7-**T8**-7, V7-**T8**-11, V7-**T8**-13, V7-**T8**-15, V7-**T8**-17, V7-**T8**-26, V7-**T8**-30, V7-**T8**-34, V7-**T8**-40, V7-**T8**-45, V7-**T8**-47, V7-**T8**-49, V7-**T8**-52, V7-**T8**-55, V7-**T8**-57, V7-**T8**-60, V7-**T8**-65, V7-**T8**-69, V7-**T8**-71, V7-**T8**-74, V7-**T8**-76, V7-**T8**-78, V7-**T8**-80, V7-**T8**-83, V7-**T8**-88, V7-**T8**-103
XBDP V7-**T8**-17
XBGB V7-**T8**-102
XBMB V7-**T8**-102
XBMG V7-**T8**-102
XBMK. V7-**T8**-101, V7-**T8**-102
XBML. V7-**T8**-101
XBMP. V7-**T8**-56, V7-**T8**-101
XBMU V7-**T8**-29, V7-**T8**-102
XBMX. V7-**T8**-102
XBMZ. V7-**T8**-7, V7-**T8**-11, V7-**T8**-13, V7-**T8**-15, V7-**T8**-17, V7-**T8**-19, V7-**T8**-23, V7-**T8**-26, V7-**T8**-28, V7-**T8**-30, V7-**T8**-34, V7-**T8**-38, V7-**T8**-40, V7-**T8**-43, V7-**T8**-45, V7-**T8**-47, V7-**T8**-49, V7-**T8**-52, V7-**T8**-55, V7-**T8**-57, V7-**T8**-60, V7-**T8**-63, V7-**T8**-65, V7-**T8**-69, V7-**T8**-71, V7-**T8**-74, V7-**T8**-76, V7-**T8**-78, V7-**T8**-80, V7-**T8**-84, V7-**T8**-86, V7-**T8**-88, V7-**T8**-98, V7-**T8**-99, V7-**T8**-101
XBPC V7-**T8**-25, V7-**T8**-51, V7-**T8**-77
XBPF V7-**T8**-25, V7-**T8**-51, V7-**T8**-77
XBPT V7-**T8**-33, V7-**T8**-37, V7-**T8**-39, V7-**T8**-40, V7-**T8**-42, V7-**T8**-44, V7-**T8**-46, V7-**T8**-48, V7-**T8**-49, V7-**T8**-51, V7-**T8**-59, V7-**T8**-84, V7-**T8**-88
XBPU V7-**T8**-54
XBQT V7-**T8**-68, V7-**T8**-70, V7-**T8**-71, V7-**T8**-73, V7-**T8**-75, V7-**T8**-77
XBQU. V7-**T8**-79
XBTC V7-**T8**-97
XBTD V7-**T8**-97
XBTK V7-**T8**-25
XBUK V7-**T8**-22, V7-**T8**-25, V7-**T8**-27, V7-**T8**-84, V7-**T8**-86
XBUT V7-**T8**-6, V7-**T8**-10, V7-**T8**-12, V7-**T8**-14, V7-**T8**-16, V7-**T8**-21, V7-**T8**-22, V7-**T8**-25
XB3U V7-**T8**-18, V7-**T8**-19
XC-CPU V7-**T4**-33, V7-**T4**-34
XC-152 . . . . . V7-**T9**-12
XIO. V7-**T4**-33
XIOC V7-**T4**-34–V7-**T4**-37
XN V7-**T4**-80–V7-**T4**-86
XN-ANBZ V7-**T4**-87
XNE V7-**T4**-78, V7-**T4**-79
XN-KO V7-**T4**-87
XN-LABEL V7-**T4**-87
XN-PS. V7-**T4**-87
XN-QV V7-**T4**-87
XN-WEW V7-**T4**-87
XN-322 . . . . . V7-**T4**-69
XRA V7-**T3**-18
XRP V7-**T3**-5

XRR V7-**T3**-5, V7-**T3**-13, V7-**T3**-16
XRU V7-**T3**-5, V7-**T3**-13, V7-**T3**-16
XT-CAT V7-**T4**-37
XT-CPU V7-**T4**-37
XT-FIL V7-**T4**-37
XT-MEM V7-**T4**-36
XTPE V7-**T9**-21
XT-RJ45. . . . . V7-**T4**-37
XT-SUB V7-**T4**-37
XV-10. . . . . V7-**T5**-28
XV-102. . . . . V7-**T4**-62, V7-**T5**-29, V7-**T9**-12
XV-152. . . . . V7-**T4**-62, V7-**T5**-28
XV-303. . . . . V7-**T4**-65

Z

ZB4 . . . . . V7-**T3**-45

Numerics

10250ED V7-**T1**-18, V7-**T1**-19, V7-**T1**-188, V7-**T1**-190, V7-**T1**-191, V7-**T1**-197, V7-**T1**-199, V7-**T1**-204, V7-**T1**-207, V7-**T1**-212, V7-**T1**-226, V7-**T1**-228, V7-**T1**-239, V7-**T1**-287, V7-**T1**-349
10250H V7-**T1**-18–V7-**T1**-20, V7-**T1**-23, V7-**T1**-27
10250T V7-**T1**-269
10250TA V7-**T1**-189, V7-**T1**-190, V7-**T1**-217, V7-**T1**-225–V7-**T1**-229, V7-**T1**-240, V7-**T1**-279, V7-**T1**-280, V7-**T1**-288
10250TB V7-**T1**-21, V7-**T1**-197, V7-**T1**-198, V7-**T1**-206, V7-**T1**-336, V7-**T1**-342
10250TC V7-**T1**-195, V7-**T1**-200, V7-**T1**-206, V7-**T1**-213, V7-**T1**-330–V7-**T1**-332, V7-**T1**-334, V7-**T1**-337, V7-**T1**-342
10250TD V7-**T1**-354
10250TE V7-**T1**-215, V7-**T1**-230, V7-**T1**-278, V7-**T1**-281, V7-**T1**-352, V7-**T1**-353
10250TF V7-**T1**-215, V7-**T1**-228, V7-**T1**-234, V7-**T1**-278, V7-**T1**-280, V7-**T1**-352, V7-**T1**-353
10250TG V7-**T1**-21
10250TJ V7-**T1**-197, V7-**T1**-198, V7-**T1**-206, V7-**T1**-218, V7-**T1**-232, V7-**T1**-336, V7-**T1**-342
10250TK V7-**T1**-213, V7-**T1**-227
10250TL V7-**T1**-213, V7-**T1**-230, V7-**T1**-232, V7-**T1**-281
10250TM. V7-**T1**-228, V7-**T1**-230–V7-**T1**-232, V7-**T1**-280
10250TN V7-**T1**-232, V7-**T1**-233, V7-**T1**-283, V7-**T1**-356
10250TP V7-**T1**-231, V7-**T1**-232
10250TR V7-**T1**-231, V7-**T1**-232, V7-**T1**-240, V7-**T1**-288
10250TS V7-**T1**-213, V7-**T1**-230–V7-**T1**-232, V7-**T1**-234, V7-**T1**-281, V7-**T1**-284
10250T1 . . . . . V7-**T1**-17, V7-**T1**-187, V7-**T1**-188, V7-**T1**-193, V7-**T1**-194, V7-**T1**-198, V7-**T1**-201, V7-**T1**-204, V7-**T1**-211, V7-**T1**-212, V7-**T1**-218, V7-**T1**-236–V7-**T1**-238, V7-**T1**-286, V7-**T1**-287, V7-**T1**-328, V7-**T1**-329, V7-**T1**-332, V7-**T1**-333, V7-**T1**-340, V7-**T1**-349, V7-**T1**-354
10250T2 . . . . . V7-**T1**-17, V7-**T1**-186, V7-**T1**-187, V7-**T1**-193, V7-**T1**-194, V7-**T1**-207, V7-**T1**-218–V7-**T1**-220, V7-**T1**-236–V7-**T1**-238, V7-**T1**-286, V7-**T1**-287, V7-**T1**-332, V7-**T1**-333
10250T3. . . . . V7-**T1**-17, V7-**T1**-21, V7-**T1**-186, V7-**T1**-187, V7-**T1**-192–V7-**T1**-194, V7-**T1**-202, V7-**T1**-212, V7-**T1**-216, V7-**T1**-220, V7-**T1**-236–V7-**T1**-238, V7-**T1**-286, V7-**T1**-287, V7-**T1**-333, V7-**T1**-349
10250T4. . . . . V7-**T1**-186, V7-**T1**-191, V7-**T1**-192, V7-**T1**-194, V7-**T1**-198, V7-**T1**-201, V7-**T1**-204, V7-**T1**-207, V7-**T1**-213, V7-**T1**-215–V7-**T1**-218, V7-**T1**-236–V7-**T1**-238, V7-**T1**-286, V7-**T1**-287, V7-**T1**-333, V7-**T1**-340
10250T5. . . . . V7-**T1**-17, V7-**T1**-186, V7-**T1**-188, V7-**T1**-196, V7-**T1**-197, V7-**T1**-199, V7-**T1**-204, V7-**T1**-214, V7-**T1**-216, V7-**T1**-236–V7-**T1**-238, V7-**T1**-286, V7-**T1**-287, V7-**T1**-328, V7-**T1**-340, V7-**T1**-352
10250T6. . . . . V7-**T1**-205, V7-**T1**-214, V7-**T1**-236, V7-**T1**-238, V7-**T1**-286, V7-**T1**-341, V7-**T1**-352
10250T7. . . . . V7-**T1**-22, V7-**T1**-192, V7-**T1**-193, V7-**T1**-205, V7-**T1**-219, V7-**T1**-236–V7-**T1**-238, V7-**T1**-286, V7-**T1**-287, V7-**T1**-324–V7-**T1**-326, V7-**T1**-335, V7-**T1**-336, V7-**T1**-341, V7-**T1**-344, V7-**T1**-345
10250T8. . . . . V7-**T1**-205, V7-**T1**-330, V7-**T1**-331, V7-**T1**-337–V7-**T1**-339, V7-**T1**-341
10250T9. . . . . V7-**T1**-198, V7-**T1**-201, V7-**T1**-204, V7-**T1**-205, V7-**T1**-340, V7-**T1**-341
11-11 . . . . . V7-**T1**-240, V7-**T1**-288
11-16 . . . . . V7-**T1**-240, V7-**T1**-288
11-20 . . . . . V7-**T1**-26, V7-**T1**-27, V7-**T1**-240, V7-**T1**-288
11-21 . . . . . V7-**T1**-26
11-45 . . . . . V7-**T1**-240, V7-**T1**-288
11-46 . . . . . V7-**T1**-27
11-54 . . . . . V7-**T1**-240, V7-**T1**-288
11-57 . . . . . V7-**T1**-27
11-95 . . . . . V7-**T1**-27
15-15 . . . . . V7-**T1**-240, V7-**T1**-288
15-18 . . . . . V7-**T1**-179
15-19 . . . . . V7-**T1**-240, V7-**T1**-288
16-MS V7-**T1**-40
16-15 . . . . . V7-**T1**-240, V7-**T1**-288
16-19 . . . . . V7-**T1**-26
16-20 . . . . . V7-**T1**-179, V7-**T1**-240, V7-**T1**-288
16-34 . . . . . V7-**T1**-240
17-16 . . . . . V7-**T1**-27
17-19 . . . . . V7-**T1**-27
24-50 . . . . . V7-**T1**-240
24-65 . . . . . V7-**T1**-240
25-18 . . . . . V7-**T1**-240, V7-**T1**-288
28-10 . . . . . V7-**T1**-179
28-15 . . . . . V7-**T1**-179
28-22 . . . . . V7-**T1**-239, V7-**T1**-287
28-30 . . . . . V7-**T1**-239, V7-**T1**-287
28-37 . . . . . V7-**T1**-239, V7-**T1**-287
28-49 . . . . . V7-**T1**-27, V7-**T1**-239, V7-**T1**-287
28-51 . . . . . V7-**T1**-239, V7-**T1**-287
28-88 . . . . . V7-**T1**-27
28-90 . . . . . V7-**T1**-27
28-94 . . . . . V7-**T1**-179
29-37 . . . . . V7-**T1**-240, V7-**T1**-288

30-44 . . . . . V7-**T1**-240, V7-**T1**-288
32-25 . . . . . V7-**T1**-27
32-80 . . . . . V7-**T1**-240, V7-**T1**-288
35-15 . . . . . V7-**T1**-179
41-78 . . . . . V7-**T1**-240, V7-**T1**-288
42-26 . . . . . V7-**T1**-179
49-34 . . . . . V7-**T1**-26
49-35 . . . . . V7-**T1**-26
4977 . . . . . V7-**T3**-150
52-11 . . . . . V7-**T1**-179
52-12 . . . . . V7-**T1**-240
52-91 . . . . . V7-**T1**-240
53-11 . . . . . V7-**T1**-26
53-12 . . . . . V7-**T1**-26
53-13 . . . . . V7-**T1**-240, V7-**T1**-288
53-31 . . . . . V7-**T1**-240
54-12 . . . . . V7-**T1**-240
54-71 . . . . . V7-**T1**-240
54-72 . . . . . V7-**T1**-240
56-10 . . . . . V7-**T1**-240, V7-**T1**-288
56-93 . . . . . V7-**T1**-227
57-25 . . . . . V7-**T1**-179
69-25 . . . . . V7-**T1**-26
73-13 . . . . . V7-**T1**-27
79-66 . . . . . V7-**T1**-26, V7-**T1**-27
80-55 . . . . . V7-**T1**-240, V7-**T1**-288
86-25 . . . . . V7-**T1**-26, V7-**T1**-27
86-35 . . . . . V7-**T1**-27
911-3 . . . . . V7-**T1**-27
9575. . . . . V7-**T3**-119

A

Accessories
- ELC2 Series PLCs . . . V7-**T4**-17
- M22 and Commercial Control Stations . . V7-**T1**-111–V7-**T1**-117
- Power Distribution Blocks . . . V7-**T8**-124
- Pushbutton Control Stations . . . V7-**T1**-111–V7-**T1**-117
  - M22 and Commercial . . . V7-**T1**-23
- Pushbuttons
  - 10250T 30.5 mm Heavy-Duty Watertight/Oiltight . . . V7-**T1**-225–V7-**T1**-229
  - E30 30.5 mm Square Multifunction Watertight/Oiltight . . . V7-**T1**-175
  - E34 30.5 mm Corrosion Resistant Watertight/Oiltight . . . V7-**T1**-279
  - HT800 30.5 mm Watertight/Oiltight . . . V7-**T1**-311
- RMQ . . . V7-**T1**-40
- Stacklights
  - SL7 and SL4 Series . . . V7-**T2**-19
- Toggle Switches
  - E10 . . . V7-**T1**-5
- ***XB*** Series Terminal Blocks . . . V7-**T8**-90–V7-**T8**-103
  - DIN Rails . . . V7-**T8**-92
  - End Stops . . . V7-**T8**-91
  - Ferrules . . . V7-**T8**-94
  - Hand Tools . . . V7-**T8**-97
  - Marking Accessories . . . V7-**T8**-98–V7-**T8**-102
  - Mounting Brackets . . . V7-**T8**-93
  - Plates, Covers and Bridges . . . V7-**T8**-103
  - Testing Accessories . . . V7-**T8**-103
- XC Series PLCs . . . V7-**T4**-36
- XI/ON Series I/O Modules . . . V7-**T4**-87
- XV Series HMI-PLCs . . . V7-**T4**-58, V7-**T4**-62, V7-**T9**-12

Acoustic Devices
- Buzzers . . . V7-**T1**-106
- Complete Devices . . . V7-**T1**-106

ASi Adapter Modules . . . V7-**T1**-108

B

Bulkhead Interfaces . . . V7-**T1**-107

Button Plates
- RMQ . . . V7-**T1**-42

C

CE Marked
- Industrial Control Transformers . . . V7-**T7**-18

Commercial Control Stations
- 10250H Series Heavy-Duty . . . V7-**T1**-20, V7-**T1**-21
- Class I Division 2 10250T Series Heavy-Duty . . . V7-**T1**-22
- Class I Division 2 E34 Series Corrosion Resistant . . . V7-**T1**-23
- Custom Assembled . . . V7-**T1**-24
- General Purpose . . . V7-**T1**-18
- Key Specifications . . . V7-**T1**-17
- Special Purpose . . . V7-**T1**-19

Connectivity Solutions
- SmartWire-DT . . . V7-**T9**-1

Control Relays and Timers
- Alternating Relays . . . V7-**T3**-188
- Catalog Number Selection . . . V7-**T3**-3
- EZ Programmable Relays . . . V7-**T3**-19–V7-**T3**-48
- General Purpose Plug-In Relays . . . V7-**T3**-49–V7-**T3**-117
- Machine Tool Relays . . . V7-**T3**-141–V7-**T3**-166
- Product Overview . . . V7-**T3**-2
- Solid-State Relays . . . V7-**T3**-122–V7-**T3**-140
- Timing Relays . . . V7-**T3**-167–V7-**T3**-187
- ***XR*** Series Terminal Block Relays . . . V7-**T3**-3–V7-**T3**-18

Control Station Components, M22
- Acoustic Devices . . . V7-**T1**-106
- ASi Adapter Modules . . . V7-**T1**-108
- Bulkhead Interfaces . . . V7-**T1**-107
- Double Pushbuttons . . . V7-**T1**-99
- Emergency Stops, Illuminated . . . V7-**T1**-76
- Four-Way Pushbuttons . . . V7-**T1**-103
- Indicating Lights, Flush . . . V7-**T1**-73
- Joysticks . . . V7-**T1**-104
- Mushroom Head Pushbuttons, Non-Illuminated . . . V7-**T1**-95, V7-**T1**-97
- Palm Switches . . . V7-**T1**-109
- Potentiometers . . . V7-**T1**-106
- Pushbuttons
  - Illuminated . . . V7-**T1**-65, V7-**T1**-67, V7-**T1**-69, V7-**T1**-71
  - Non-Illuminated . . . V7-**T1**-55, V7-**T1**-57, V7-**T1**-59, V7-**T1**-61
- Selector Switches, Illuminated . . . V7-**T1**-85, V7-**T1**-86
- Selector Switches, Key-Operated . . . V7-**T1**-88–V7-**T1**-91
- Selector Switches, Non-Illuminated . . . V7-**T1**-81–V7-**T1**-83
- Symbols Library . . . V7-**T1**-129
- Through-the-Door Operators . . . V7-**T1**-107

Control Stations—Assembled . . . V7-**T1**-14–V7-**T1**-131

D

Double Pushbutton Components . . . V7-**T1**-99

Double Pushbuttons
- Catalog Number Selection . . . V7-**T1**-98
- Extended and Flush, Center Light . . . V7-**T1**-100

E

E10
- Hesitation Switches, Heavy-Duty . . . V7-**T1**-5
- Pushbuttons, Non-Illuminated . . . V7-**T1**-5
- Toggle Switches, General Purpose Toggles . . . V7-**T1**-4

E10E
- Econoswitch . . . V7-**T1**-9
- Molded-In Screw Terminal . . . V7-**T1**-9
- Switch Guard . . . V7-**T1**-9

EASY Programmable Relays
- EASY MFD (Multi-Function Displays) . . . V7-**T3**-33
- EASY/MFD Accessories . . . V7-**T3**-43
- EASY/MFD Communication Modules . . . V7-**T3**-40
- EASY/MFD Expansion Modules . . . V7-**T3**-30
- EASY/MFD Power Supplies . . . V7-**T3**-43
- EASY/MFD Software . . . V7-**T3**-43

easySafety Relays and Timers V7-**T3**-199–V7-**T3**-204

Eaton Terms & Conditions
- Freight V7-**A1**-3
- Limitation of Liability V7-**A1**-5
- Terms and Conditions of Sale V7-**A1**-1
- Terms of Payment V7-**A1**-2
- Warranty V7-**A1**-3

ELC Graphics Panels V7-**T5**-5
- Cable V7-**T5**-8
- Products V7-**T5**-7
- Protocols V7-**T5**-5
- Software and Accessories V7-**T5**-8
- Technical Data V7-**T5**-10

ELC2 Series Programmable Logic Controllers
- Digital Expansion Modules (Right Side Bus) V7-**T4**-14
- ELC Modular PLCs V7-**T4**-6
- ELCM Modular Brick PLCs V7-**T4**-4
- Master Communication Modules V7-**T4**-12
- Remote I/O Adapters V7-**T4**-13

Emergency Stop Components
- Illuminated V7-**T1**-76

Emergency Stops
- Catalog Number Selection V7-**T1**-74
- Illuminated V7-**T1**-75, V7-**T1**-76
- Non-Illuminated V7-**T1**-75, V7-**T1**-76
- RMQ V7-**T1**-35

F

Four-Way Pushbutton Components V7-**T1**-103

Four-Way Pushbuttons
- Catalog Number Selection V7-**T1**-102

Fuse Blocks and Fuse Holders V7-**T8**-126–V7-**T8**-132
- C350 Series Fuse Blocks V7-**T8**-129
- C383 Series Fuse Holders V7-**T8**-127
- W Series Fuse Holders V7-**T8**-129

G

Galileo Software V7-**T5**-37

General Purpose Plug-In Relays
- Accessories V7-**T3**-112–V7-**T3**-117
  - D1PR/D1PF Series V7-**T3**-54
  - D2PR/D2PF Series V7-**T3**-60
  - D3PR/D3PF Series V7-**T3**-70
  - D5PR/D5PF Series V7-**T3**-83
  - D7PR/D7PF Series V7-**T3**-92
- D1RR/D1RF Series V7-**T3**-53
- D2PR/D2PF Series V7-**T3**-57
- D3PR/D3PF Series V7-**T3**-67
- D4 Series V7-**T3**-76
- D5PR/D5PF Series V7-**T3**-80
- D7PR/D7PF Series V7-**T3**-89
- D8 Series V7-**T3**-103
- D9 Series V7-**T3**-108

General Purpose Relays
- 9575H Series 3000 . . . . . V7-**T3**-118
- Accessories
  - Type AA V7-**T3**-119
- Type AA V7-**T3**-118
- Type AA, AC and DC V7-**T3**-118

Graphics Panels
- Power Supplies V7-**T5**-9

H

HMi Operator Interface V7-**T5**-13
- Products V7-**T5**-15
- Protocols V7-**T5**-14
- Software and Accessories V7-**T5**-16
- Technical Data V7-**T5**-18

I

IEC—***XB*** Series Terminal Blocks
- IDC (Insulation Displacement Connection) . V7-**T8**-67–V7-**T8**-81
- Miniature Circuit Breakers V7-**T8**-82–V7-**T8**-89
- Pluggable Spring Cage V7-**T8**-58–V7-**T8**-66
- Product Overview V7-**T8**-2
- Screw Connection V7-**T8**-4–V7-**T8**-30
- Spring Cage V7-**T8**-31–V7-**T8**-57

Indicating Lights
- 10250T/E34 30.5 mm Class I Division 2 Hazardous Locations V7-**T1**-321–V7-**T1**-359
- E34 30.5 mm Class I Division 2 . . . . . V7-**T1**-332
- HT800 30.5 mm Watertight/Oiltight V7-**T1**-296–V7-**T1**-317
- M22, Flush V7-**T1**-72
  - Catalog Number Selection V7-**T1**-72
  - Components V7-**T1**-73
- Ratings V7-**T1**-360
- RMQ V7-**T1**-34
- Symbols Library V7-**T1**-129

Industrial Control Transformers V7-**T7**-2–V7-**T7**-26
- CE Marked V7-**T7**-18
- Type AP V7-**T7**-25
- Type MTE V7-**T7**-4
- Type MTK V7-**T7**-13

J

Joystick Components V7-**T1**-104

Joysticks
- 10250T 30.5 mm Heavy-Duty V7-**T1**-216
- M22 . . . . . V7-**T1**-104, V7-**T1**-105

K

Key-Operated Selector Switch Components V7-**T1**-88–V7-**T1**-91

Key-Operated Selector Switches V7-**T1**-88–V7-**T1**-91
- Catalog Number Selection V7-**T1**-88

M

M22 Assembled Control Stations V7-**T1**-16

Machine Tool Relays
- Accessories
  - AR/ARD Series V7-**T3**-155
  - D15 Series V7-**T3**-144
- AR/ARD Series V7-**T3**-153
- BF/BFD Series V7-**T3**-147
- D15 Series V7-**T3**-142
- D26 Series—Type M, 600 Vac V7-**T3**-158
- D26 Series—Type M, DC V7-**T3**-163
- Options
  - AR/ARD Series V7-**T3**-155
  - BF/BFD Series V7-**T3**-150

Mushroom Head Pushbutton Components
- Non-Illuminated
  - Maintained V7-**T1**-97
  - Momentary V7-**T1**-95

Mushroom Head Pushbuttons
- Catalog Number Selection V7-**T1**-93
- Non-Illuminated
  - Maintained V7-**T1**-96, V7-**T1**-97
  - Momentary V7-**T1**-94, V7-**T1**-95

N

NEMA
- Terminal Blocks V7-**T8**-104–V7-**T8**-113

O

On Machine Components V7-**T9**-42

Operator Components
- E30, Square Multifunction V7-**T1**-169–V7-**T1**-173

Operator Interface Products V7-**T5**-1
- ELC Graphics Panels V7-**T5**-5–V7-**T5**-12
- **HMi** Operator Interface V7-**T5**-13–V7-**T5**-20
- Visual Designer Software V7-**T5**-34
- XP and XV Operator Interface V7-**T5**-21–V7-**T5**-38
- XP and XV Operator Interface with Visual Designer and XSoft-CoDeSys-2 . . . . . V7-**T5**-38
- XP with Visual Designer V7-**T5**-21–V7-**T5**-23

Operators
- 10250T 30.5 mm Heavy-Duty Watertight/Oiltight V7-**T1**-182–V7-**T1**-247
- 10250T/E34 30.5 mm Class I Division 2 Hazardous Locations V7-**T1**-321–V7-**T1**-359
- E30 30.5 mm Square Multifunction Watertight/Oiltight V7-**T1**-164–V7-**T1**-181
- E30 Square Multifunction Components . V7-**T1**-169–V7-**T1**-173
- E30, Square Multifunction V7-**T1**-166
- E30, Square Multifunction and Indicating Lights V7-**T1**-169–V7-**T1**-173
- E30, Square Multifunction Components V7-**T1**-174
- E34 30.5 mm Corrosion Resistant Watertight/Oiltight V7-**T1**-254–V7-**T1**-293
- Symbols Library V7-**T1**-129

Options
- 10250T/E34 30.5 mm Class I Division 2 Hazardous Locations V7-**T1**-354
- Pushbuttons
  - 10250T 30.5 mm Heavy-Duty Watertight/Oiltight V7-**T1**-230
  - E30 30.5 mm Square Multifunction Watertight/Oiltight V7-**T1**-176–V7-**T1**-178
  - E34 30.5 mm Corrosion Resistant Watertight/Oiltight V7-**T1**-281
  - HT800 30.5 mm Watertight/Oiltight V7-**T1**-312
- Toggle Switches
  - E10E V7-**T1**-8

P

Palm Switches
- Catalog Number Selection V7-**T1**-109
- Complete Devices V7-**T1**-109
- Components V7-**T1**-110

Panel Wiring
- SmartWire-DT V7-**T9**-1
  - Contactor Modules Diagram V7-**T9**-6

PanelMate Operator Interface
- Product Selection Guide V7-**T5**-2

PLC, I/O and Communication Products V7-**T4**-1
- ELC Series Programmable Logic Controllers V7-**T4**-2–V7-**T4**-28
- XC Series Programmable Logic Controllers V7-**T4**-29–V7-**T4**-56
- XI/ON Series Remote I/O V7-**T4**-70–V7-**T4**-115
- XV-100 Series HMI-PLCs V7-**T4**-61, V7-**T4**-62
- XV-300 Series HMI-PLCs V7-**T4**-63–V7-**T4**-67

Potentiometers
- Complete Devices V7-**T1**-106
- Components V7-**T1**-106

Power Distribution Blocks V7-**T8**-114–V7-**T8**-125
- CH160 Series V7-**T8**-121
- CHDB Series V7-**T8**-115
- Terminal Block Accessories V7-**T8**-124

Power Supplies V7-**T6**-1–V7-**T6**-36
- ELC Series V7-**T6**-23
- EZ Power Supply V7-**T6**-26
- PSG Series V7-**T6**-3
- PSS Series V7-**T6**-33
- Sensor Power Supply V7-**T6**-30

Programmable Relays
- easy500/700/800 . . . . . V7-**T3**-20
- easy802/806 with SmartWire-DT V7-**T3**-26

Pushbutton Components, M22
- Illuminated
  - Extended, Maintained V7-**T1**-71
  - Extended, Momentary V7-**T1**-69
  - Flush, Maintained V7-**T1**-67
  - Flush, Momentary V7-**T1**-65

Pushbutton Components, M22, continued
- Non-Illuminated
  - Extended, Maintained . . . V7-**T1**-61
  - Extended, Momentary . . . V7-**T1**-59
  - Flush, Maintained . . . V7-**T1**-57
  - Flush, Momentary . . . V7-**T1**-55

Pushbutton Control Stations
- Coding Adapter Guide . . . V7-**T1**-118
- Commercial . . . V7-**T1**-17
  - 10250H Series Heavy-Duty . . . V7-**T1**-20
  - 10250T Series Heavy-Duty . . . V7-**T1**-21
  - Class I Division 2 10250T Series Heavy-Duty . . . V7-**T1**-22
  - Class I Division 2 E34 Series Corrosion Resistant . . V7-**T1**-23
  - General Purpose . . . V7-**T1**-18
  - Special Purpose . . . V7-**T1**-19
- Custom Assembled . . . V7-**T1**-24

Pushbutton Control Stations—Assembled V7-**T1**-14–V7-**T1**-131

Pushbuttons
- 10250T
  - Catalog Number Selection . . . V7-**T1**-184, V7-**T1**-185
  - Point-of-Purchase Packaging . . . V7-**T1**-186
- 10250T 30.5 mm Heavy-Duty
  - Emergency Stops . . . V7-**T1**-196–V7-**T1**-201
  - Indicating Light Units . . . V7-**T1**-193, V7-**T1**-194
  - Joystick Units . . . V7-**T1**-215–V7-**T1**-217
  - Key Operators . . . V7-**T1**-211
  - Operators and Pushbutton Units . . . V7-**T1**-190
  - Potentiometers . . . V7-**T1**-202
  - Push-Pull Operators . . . V7-**T1**-203
  - Roto-Push . . . V7-**T1**-219–V7-**T1**-224
  - Selector Switches . . . V7-**T1**-207
- 10250T 30.5 mm Heavy-Duty
  - Watertight/Oiltight . . . V7-**T1**-182–V7-**T1**-247
- 10250T/E34 30.5 mm Class I Division 2
  - Hazardous Locations . . . V7-**T1**-321–V7-**T1**-359
- E30 30.5 mm Square Multifunction
  - Watertight/Oiltight . . . V7-**T1**-164–V7-**T1**-181
- E34 30.5 mm Corrosion Resistant
  - Watertight/Oiltight . . . V7-**T1**-254–V7-**T1**-293
- HT800 30.5 mm Watertight/Oiltight V7-**T1**-296–V7-**T1**-317
- Illuminated
  - E34 . . . V7-**T1**-262
  - E34 30.5 mm Class I Division 2 . . . V7-**T1**-330
  - HT800 . . . V7-**T1**-300
- Key Operators, E34 . . . V7-**T1**-276
- M22
  - Button Plates . . . V7-**T1**-111
  - Double . . . V7-**T1**-98
  - Emergency Stops . . . V7-**T1**-74
  - Four-Way . . . V7-**T1**-102
  - Illuminated
    - Catalog Number Selection . . . V7-**T1**-62
    - Extended, Maintained . . . V7-**T1**-70, V7-**T1**-71
    - Extended, Momentary . . . V7-**T1**-68, V7-**T1**-69
    - Flush, Maintained . . . V7-**T1**-66, V7-**T1**-67
    - Flush, Momentary . . . V7-**T1**-63–V7-**T1**-65

Pushbuttons, continued
- Key-Operated Selector Switches . . . V7-**T1**-88
- Mushroom Head . . . V7-**T1**-92
- Non-Illuminated
  - Catalog Number Selection . . . V7-**T1**-53
  - Extended, Maintained . . . V7-**T1**-60, V7-**T1**-61
  - Extended, Momentary . . . V7-**T1**-58, V7-**T1**-59
  - Flush, Maintained . . . V7-**T1**-56, V7-**T1**-57
  - Flush, Momentary . . . V7-**T1**-53–V7-**T1**-55
- Product Selection Guide . . . V7-**T1**-48–V7-**T1**-51
- Selector Switches . . . V7-**T1**-78
- Momentary Units
  - E34 30.5 mm Class I Division 2 . . . V7-**T1**-324
- Non-Illuminated
  - E34 . . . V7-**T1**-260
  - E34 30.5 mm Class I Division 2 . . . V7-**T1**-328
  - HT800 . . . V7-**T1**-298
- Push-Pull Units
  - E34 . . . V7-**T1**-264
  - E34 30.5 mm Class I Division 2 . . . V7-**T1**-335
  - HT800 . . . V7-**T1**-306
- Ratings . . . V7-**T1**-360
- RMQ
  - Button Plates . . . V7-**T1**-42
  - Illuminated . . . V7-**T1**-33
  - Non-Illuminated . . . V7-**T1**-32
  - Product Selection Guide . . . V7-**T1**-31
- Selector Switches
  - E34 . . . V7-**T1**-272
  - E34 30.5 mm Class I Division 2 . . . V7-**T1**-344
  - HT800 . . . V7-**T1**-308
- Symbols Library . . . V7-**T1**-129

Pushbuttons and Indicating Lights . . . V7-**T1**-1

R

Relays and Timers
- easySafety . . . V7-**T3**-199–V7-**T3**-204

Renewal Parts
- M22 and Commercial Control Stations . . . V7-**T1**-26

Replacement Parts
- Pushbuttons
  - 10250T 30.5 mm Heavy-Duty
    - Watertight/Oiltight . . . V7-**T1**-239
  - E30 30.5 mm Square Multifunction
    - Watertight/Oiltight . . . V7-**T1**-179
  - E34 30.5 mm Corrosion Resistant
    - Watertight/Oiltight . . . V7-**T1**-287
  - HT800 30.5 mm Watertight/Oiltight . . . V7-**T1**-315
- Stacklights, E26 Series . . . V7-**T2**-40

RMQ
- 16.22 mm Pushbuttons . . . V7-**T1**-30–V7-**T1**-46
- Accessories . . . V7-**T1**-40

S

Selector Switch Components
- Illuminated V7-**T1**-85, V7-**T1**-86
- Non-Illuminated V7-**T1**-81–V7-**T1**-83

Selector Switches
- 10250T 30.5 mm Heavy-Duty Watertight/Oiltight V7-**T1**-182–V7-**T1**-247
- 10250T/E34 30.5 mm Class I Division 2 Hazardous Locations V7-**T1**-321–V7-**T1**-359
- E34 30.5 mm Corrosion Resistant Watertight/Oiltight V7-**T1**-254–V7-**T1**-293
- HT800 30.5 mm Watertight/Oiltight V7-**T1**-296–V7-**T1**-317
- M22
  - Catalog Number Selection
    - Illuminated V7-**T1**-84
    - Non-Illuminated V7-**T1**-79
  - Illuminated V7-**T1**-85
  - Non-Illuminated V7-**T1**-80–V7-**T1**-83
- RMQ
  - Illuminated V7-**T1**-37
  - Keyed V7-**T1**-38, V7-**T1**-39
  - Non-Illuminated V7-**T1**-36

Sensor Power Supply V7-**T6**-30

SmartWire-DT In Panel and On Machine Wiring Solution V7-**T9**-2–V7-**T9**-116

SmartWire-DT
- I/O and Powerfeed Modules, System Connectivity Components V7-**T9**-14
- Motor Control Modules V7-**T9**-18
- Stacklight Modules with SmartWire-DT V7-**T9**-40
- System Components V7-**T9**-4
- System Connectivity Components
  - In Panel Components V7-**T9**-16
  - Outside-the-Panel Components V7-**T9**-17
- System Control
  - easy800 . . . . . V7-**T9**-13
  - EASY-SWD Accessories V7-**T9**-13
  - Gateway Modules V7-**T9**-11
  - XC152 PLC V7-**T9**-12
  - XV HMI/PLC V7-**T9**-12
- System Controllers V7-**T9**-8
- System Overview V7-**T9**-2

Solid-State Relays
- Accessories
  - D93 Series V7-**T3**-124
- D93 Series V7-**T3**-123
- D93, D96 and D99 Series
  - Catalog Number Selection V7-**T3**-122
  - Overview V7-**T3**-122
- D96 Series V7-**T3**-130
- D99 Series V7-**T3**-135

Stacklights
- E26 Series V7-**T2**-32
  - Assembled Units V7-**T2**-35
  - Components V7-**T2**-38
  - LEDs—Cylindrical or Cluster V7-**T2**-37
  - Light and Xenon Strobe Modules V7-**T2**-36
- SL4 Series
  - Acoustic Modules V7-**T2**-16
  - Base Modules V7-**T2**-17, V7-**T2**-18
  - Complete Devices V7-**T2**-14
  - Component Identification V7-**T2**-12, V7-**T2**-13
  - Light Modules V7-**T2**-14–V7-**T2**-16
- SL7 Series
  - Acoustic Modules V7-**T2**-9
  - Base Modules V7-**T2**-10, V7-**T2**-11
  - Complete Devices V7-**T2**-6
  - Component Identification V7-**T2**-4, V7-**T2**-5
  - Light Modules V7-**T2**-6–V7-**T2**-8

T

Terminal Blocks
- IDC (Insulation Displacement Connection) . V7-**T8**-67–V7-**T8**-81
- Miniature Circuit Breakers V7-**T8**-82–V7-**T8**-89
- NEMA V7-**T8**-104–V7-**T8**-113
  - C381 Series V7-**T8**-105
  - TB Series V7-**T8**-109
- Pluggable Spring Cage V7-**T8**-58–V7-**T8**-66
- Screw Connection V7-**T8**-4–V7-**T8**-30
- Spring Cage V7-**T8**-31–V7-**T8**-57

Terminal Blocks, Fuse Blocks and Fuse Holders V7-**T8**-1

Through-the-Door Operators
- Complete Devices V7-**T1**-107
- Components V7-**T1**-107

Timing Relays
- Accessories
  - TMR5 Series V7-**T3**-180
  - TMR6 Series V7-**T3**-184
  - TR Series V7-**T3**-177
- Product Selection Guide V7-**T3**-167
- TMR5 Series V7-**T3**-179
- TMR6 Series V7-**T3**-183
- TMRP Series V7-**T3**-185
- TR Series V7-**T3**-176
- Universal TR Series V7-**T3**-172

Toggle Switches
- E10 . . . . . V7-**T1**-2–V7-**T1**-7
  - Accessories V7-**T1**-5
- E10E Environmentally Sealed V7-**T1**-8–V7-**T1**-11
  - Options V7-**T1**-8

Transformers
- Industrial Control V7-**T7**-1–V7-**T7**-26

Type AP
- Industrial Control Transformers V7-**T7**-25

Type MTE
- Industrial Control Transformers V7-**T7**-4

Type MTK
- Industrial Control Transformers V7-**T7**-13

V

Visual Designer Software V7-**T5**-34
Products V7-**T5**-35

X

XC Series Programmable Logic Controllers
XC101 Modular PLCs V7-**T4**-33
XC121 Compact PLC CPU V7-**T4**-33
XC121 I/O Expansion Module V7-**T4**-33
XC201 Modular PLCs V7-**T4**-34
XC202 Modular PLCs V7-**T4**-34

XI/ON Series Remote I/O
Base Modules V7-**T4**-84
XN Series V7-**T4**-80
XNE Series V7-**T4**-78

XP and XV Operator Interface V7-**T5**-21

XP and XV Operator Interface with Visual Designer
Product Selection Guide V7-**T4**-64, V7-**T5**-26

XP Operator Interface
Products. V7-**T5**-22

XP with Visual Designer. V7-**T5**-21
Technical Data V7-**T5**-23

XR Series Terminal Block Relays
Accessories V7-**T3**-18
High Current V7-**T3**-15
OptoCoupler V7-**T3**-12
Standard. V7-**T3**-4

XSoft-CoDeSys-2 . . . . . V7-**T5**-24
Products. V7-**T5**-38

XSoft-CoDeSys-3 . . . . . V7-**T5**-38

XV Operator Interface
Products. V7-**T5**-28, V7-**T5**-29, V7-**T5**-30

XV Series HMI-PLCs V7-**T4**-61, V7-**T4**-63

XV with Visual Designer. V7-**T5**-24

XV with Visual Designer or XSoft-CoDeSys
Technical Data V7-**T5**-32

XV with XSoft-CoDeSyS-3 . . . . . V7-**T5**-24