NOTES	
-	ON MAIN VIEW ASSEMBLY 33254285 SHOWN (CODE A)
-	DELIVERED CONDITION AS ON MAIN VIEWS - SECONDARY LOCK IN OPEN POSITION
-	ASSEMBLY INSTRUCTION NO.: 35269105-CUS71 - PRELIMINARY ASSEMBLY 35269105-CUS72 - HARNESS ASSEMBLY 35269102-CUS73 - CAR ASSEMBLY
-	MATING PARTS: - 3 WAY 1.5 FEMALE CONNECTOR ASM DWG-NO.: 33253566 - 2 WAY 1.5 FEMALE CONNECTOR ASM DWG-NO.: 35124386 - FIXING SLIDE APTIV DWG-NO.: 33329557 (HT DWG-NO.: 17-1455-001-CSG) - BACKSHELL 90 DEG APTIV DWG-NO.: 33365444 (HT DWG-NO.: 17-2274-001-CSG) - BACKSHELL 180 DEG APTIV DWG-NO.: 33365244 (HT DWG-NO.: 17-1454-001-CSG) - ROTARY BACKSHELL 90 DEG APTIV DWG-NO.: 35024558 (HT DWG-NO.: 18-0195-001-CSG) ① - ROTARY BACKSHELL 180 DEG APTIV DWG-NO.: 35024559 (HT DWG-NO.: 17-0598-001-CSG) - PROTECTION CAP APTIV DWG-NO.: 35426243 (HT DWG-NO.: 17-2269-001-CSG) ①
-	MATING TERMINAL SYSTEM: - 1.5 TERMINAL DWG-NO.: 15396739 MAX WIRE CROSS SECTION: 1.0MM² RECOMMENDATION FOR 1.5 TERMINAL WITH WIRE CROSS SECTION 1.5MM² - USE COMBINATION: TE TERMINAL: TAB 1.6, DWG NO.: 1703278-5 SEAL: 2112323-1 MAX INSULATION CRIMP DIMENSIONS: HEIGHT: 3.40; WIDTH: 3.40 ①

POSITION	1								2		3	4
NAME	HOUSING PANEL MOUNT								SECONDARY LOCK		SL SEAL	FIXING SEAL
MATERIAL	PBT GF30 FR17				PBT GF30				PBT GF30 FR17	PBT GF30	LSR 50 SHORE	LSR 70 SHORE
COLOR:	BLACK	GRAY	GREEN	BLUE	BLACK	GRAY	GREEN	BLUE	ORANGE	YELLOW	REDDISH-BROWN	REDDISH-BROWN
PART-NO.:	33248987	33248992	33248999	33249006	33344614	33344620	33344621	33344623	33249026	33344606	33248990	33248985

ASSEMBLY-NO.:	PART-REV	CODING	MATERIAL/WEIGHT	-											
33254285	01	CODE A	ALL PARTS VO / 15.8	-	1	---	---	---	---	---	---	---	1	---	1
33254281	01	CODE B		-	---	1	---	---	---	---	---	---	1	---	1
33254267	01	CODE C		-	---	---	1	---	---	---	---	---	1	---	1
33254231	01	CODE D		-	---	---	---	1	---	---	---	---	1	---	1
~~33344669~~	01	CODE A	ALL PARTS NVO / 15.3	-	---	---	---	---	1	---	---	---	---	1	1
~~33344671~~	01	CODE B		-	---	---	---	---	---	1	---	---	---	1	1
~~33344672~~	01	CODE C		-	---	---	---	---	---	---	1	---	---	1	1
~~33344827~~	01	CODE D		-	---	---	---	---	---	---	---	1	---	1	1

①

NOTES	
1	APTIV LOGO
2	MATERIAL NAME ACCORDING TO VDA 260
3	DATE INSERT
4	PART CAVITY NUMBER
5	MOVING DISTANCE OF SECONDARY LOCK

DWG STATUS DATE	STG	REV	N/P	CHG	ZONE	REVISION HISTORY	AUTH	DR	APVD 1	APVD 2
250C18	R	01				INITIAL RELEASE		K.FAR	P.NAJ	M.GRU
14MR19	R	01	AA		G11 E10	REFERENCE HELLERMANN TYTON DWG-NO. ADDED REFERENCE HELLERMANN TYTON PART-NO. ADDED		K.FAR	M.GRU	K.PIT
280C20	R	01	AB		G10 G10 F10 G10	PROTECTION CAP APTIV DWG-NO.: 35426243 WAS 35274873 PART AVAILABILITY FOR PART NUMBERS 33344669, 33344671, 33344672, 33344827 NOTES UPDATED HT DWG-NO: 18-0195-001-CSG WAS 17-0195-001-CSG		P.NAJ	M.GRU	

POSSIBILITY OF MOUNTING FROM BOTH DIRECTIONS

SCALE: 1 : 1

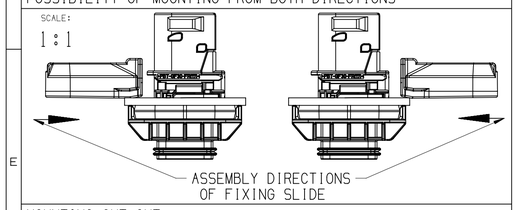

MOUNTING CUT OUT

VERSION WITH POLARISATION

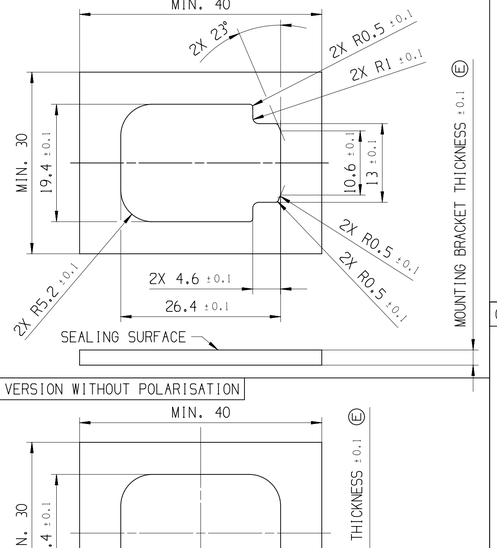

VERSION WITHOUT POLARISATION

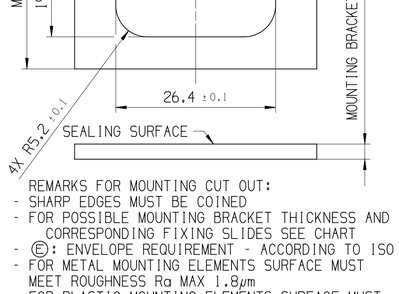

REMARKS FOR MOUNTING CUT OUT:
- SHARP EDGES MUST BE COINED
- FOR POSSIBLE MOUNTING BRACKET THICKNESS AND CORRESPONDING FIXING SLIDES SEE CHART
- Ⓔ: ENVELOPE REQUIREMENT - ACCORDING TO ISO 14405
- FOR METAL MOUNTING ELEMENTS SURFACE MUST MEET ROUGHNESS Ra MAX 1.8μm
- FOR PLASTIC MOUNTING ELEMENTS SURFACE MUST MEET MIN CLASS 24 ROUGHNESS FROM VDI 3400.

①

SHEET METAL THICKNESS	FIXING SLIDE APTIV/HT PART-NO.:		COLOR
-	PBT GF30 FR17	PBT GF30	-
1MM	~~33366529~~	~~33366527~~	NATURAL
1.5MM	~~33366530~~	~~33366521~~	GRAY
2MM	~~33366531~~	~~33366520~~	BLUE
2.5MM	33329558 / 151-02344	33344019 / 151-02345	RED
3MM	33329560 / 151-02348	33344602 / 151-02349	YELLOW
3.5MM	33329561 / 151-02352	33344600 / 151-02353	GRAY
4MM	~~33366534~~	~~33366276~~	GREEN

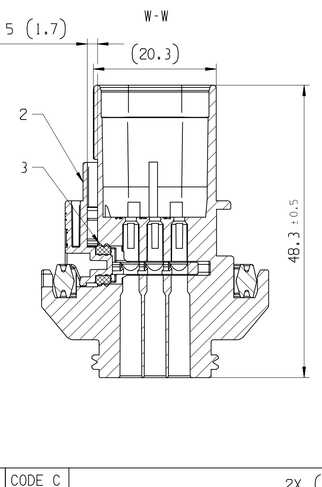

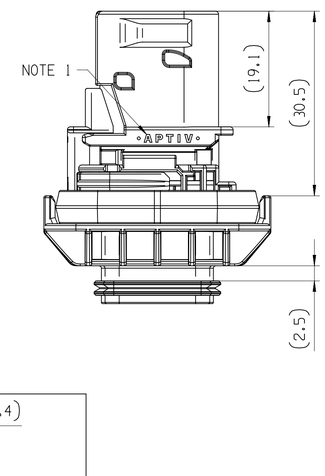

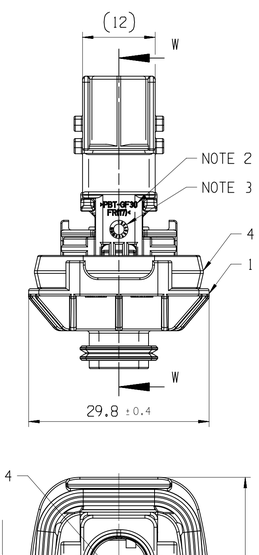

SCALE: 1 : 1

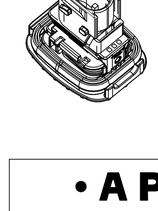

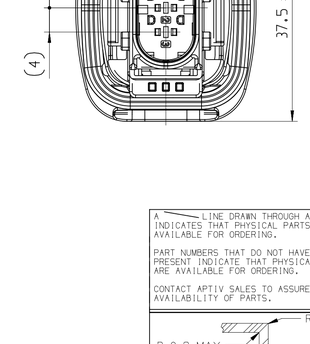

CODE A

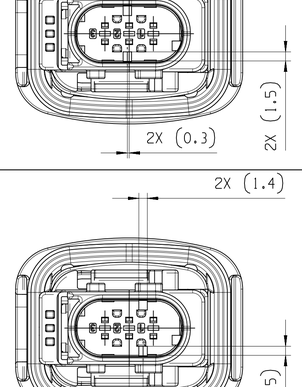

CODE C

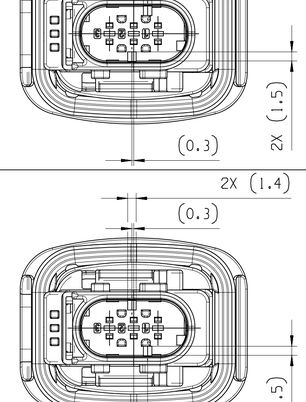

CODE B

CODE D

A LINE DRAWN THROUGH A PART NUMBER INDICATES THAT PHYSICAL PARTS ARE NOT AVAILABLE FOR ORDERING.

PART NUMBERS THAT DO NOT HAVE A LINE PRESENT INDICATE THAT PHYSICAL PARTS ARE AVAILABLE FOR ORDERING.

CONTACT APTIV SALES TO ASSURE AVAILABILITY OF PARTS.

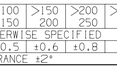

SHARP CORNER TOLERANCE

DIM TO CHECK / ( ) DIM FOR HELP / THEORETIC DIM	DIMENSIONAL RANGE (MM) FROM TO	> 0 20	> 20 30	> 30 70	> 70 100	>100 150	>150 200	>200 250	>250 300	>300 400	CHART E1
	TOLERANCE UNLESS OTHERWISE SPECIFIED	±0.15	±0.2	±0.3	±0.4	±0.5	±0.6	±0.8	±1	±1.2	
	ANGULAR TOLERANCE ±2°										

DWG TYP: PART DRAWING

WEIGHT (GR): SEE CHART

VOLUME (CM³): ---

ROUTING:

DISTR CODE: D

UNLESS OTHERWISE SPECIFIED

GENERAL TOLERANCES ACCORDING TO: SEE CHART

GD&T ACCORDING TO: ISO 1101

REFERENCE

FIRST ANGLE PROJECTION

DO NOT SCALE

USE MATH DATA

CAD NX

•APTIV•

CONNECTION SYSTEMS
KRAKOW, POLAND

COPYRIGHT 2018 APTIV. ALL RIGHTS RESERVED.

THIS DRAWING IS THE PROPERTY OF APTIV AND CONTAINS APTIV CONFIDENTIAL INFORMATION. THE REPRODUCTION, DISTRIBUTION AND UTILIZATION OF THIS DOCUMENT OR ITS RELATED CAD MATH DATA, AS WELL AS COMMUNICATION OF ANY CONTENT TO OTHERS, WITHOUT EXPRESS AUTHORIZATION, IS PROHIBITED.

TEN RYSUNEK JEST WLASNOSCIA APTIV I ZAWIERA POUFNE INFORMACJE POWIELANIE, ROZPOWSZECHNIANIE I WYKORZYSTYWANIE TEGO DOKUMENTU LUB ZWIAZANYCH Z NIM DANYCH CAD, JAK RÓWNIEZ PRZEKAZYWANIE INNYM JAKIEJKOLWIEK ICH ZAWARTOSCI, BEZ NADANIA WYRAZNYCH UPRAWNIEN, JEST ZABRONIONE

		DATE
DR	K.FARON	240C18
APVD1	P.NAJDUCH	250C18
APVD2	M.GRUDZEWSKI	260C18
APVD3		
APVD4		
APVD5		

SUBSTANCES OF CONCERN AND RECYCLED CONTENT PER APTIV 10949001
SUBSTANCJE NIEBEZPIECZNE I POWTORNIE PRZETWORZONE OKRESLA APTIV 10949001

MATERIAL: SEE CHART

DRAWING NAME: 3 WAY 1.5 CTCS PANEL MOUNT MALE ASSEMBLY

DRAWING NUMBER: 33254299

SIZE	SCALE	FRAME NO	SHEET NO	STG	REV	N/P
A1	2:1	1 OF 1	1 OF 1	R	01	AB

CONTROLLED DOCUMENTS ARE ONLY AVAILABLE ON THE SERVER

User: szczepa
Dwg: 33254299-CUS01-S01/01AB Date: 02-lis-20 Time: 16:50:15
szczepax,11022020,16:49,cadpass.nc