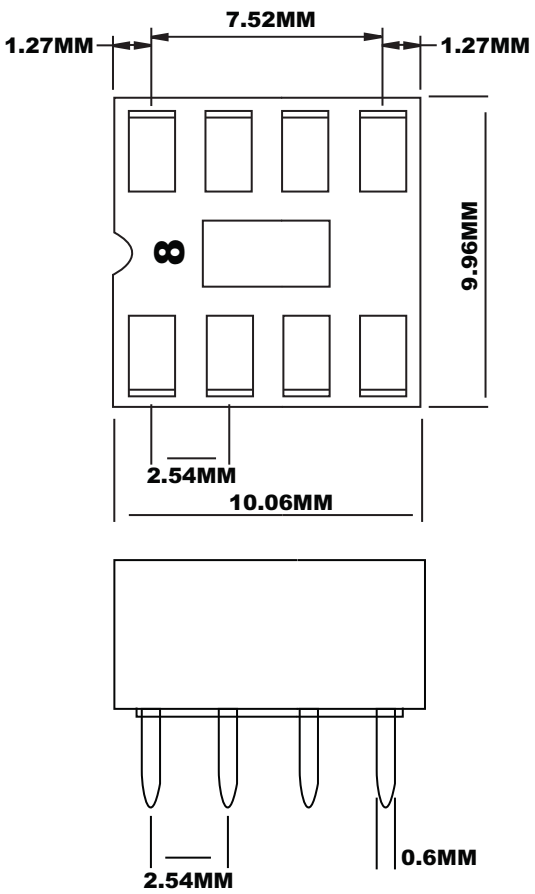

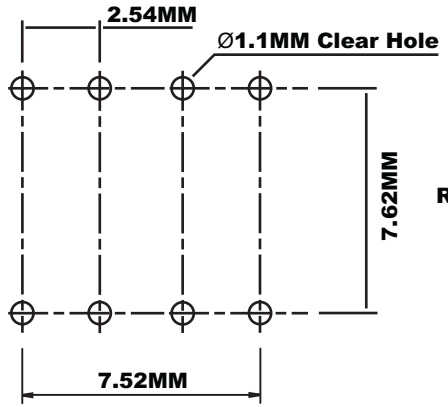

Recommended P.C.B. Layout

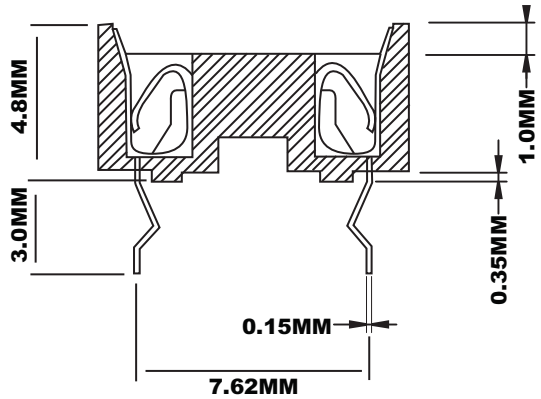

Material:

- Contact Resistance: 30 MΩ Max. @ 100mA DC
- Insulator Resistance: 1,000 MΩ Min. @ 500V DC
- Current Rating: 1 Amp
- Dielectric Withstanding Voltage: 500V AC for 1 minute
- Operating Temperature: -55°C ~ +105°C
- Contact: Phosphor Bronze, Tin Plated
- Housing: PBT & 30% Glass Fiber (UL 94V-0)

RoHS Complaint

Scale	1:1						Name
TOLERANCE					Drawn	11.07.11	Chappell
X.X	±0.40				Approved		
X.XX	±0.25						
X.XXX	±0.15						
Angle	±3°						
			Modification	Date	Name		

ASSMANN WSW components

Item No.
A08-LC-TR-R

Title: Low Cost Version IC Socket, 8 Pin Retentive Leg, 7.62MM Pitch

Drawing No.

rev00

Replace

Sheet