86015-1 Product Details

Live Product Chat

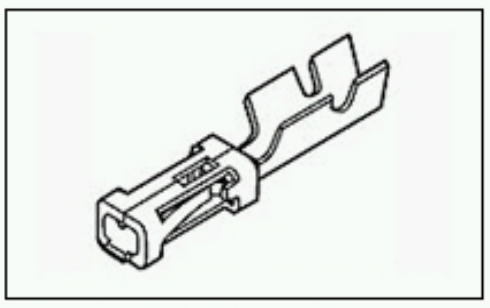

86015-1

TE Part Number: 86015-1
Active
Add to Part List

.100 AMPMODU Headers, Housings & Contacts

Always EU RoHS/ELV Compliant (Statement of Compliance)

Product Highlights:
- Contact
- Contact Type = Receptacle
- Terminate To Wire
- Wire Insulation Diameter = 1.22 mm
- Wire Range = 0.05-0.15 [30-26] mm [AWG]

View all Features | Find Similar Products

Quick Links
- Check Pricing & Availability
- Search for Tooling
- Product Feature Selector
- Contact Us About This Product
- Request Samples NEW!

Documentation & Additional Information

Product Drawings:
- RECEPTACLE CONTACT, MODIV, CRIMP SNAP-IN LOOSE PIECE (PDF, English)

Catalog Pages/Data Sheets:
- None Available

Product Specifications:
- None Available

Application Specifications:
- AMPMODU MOD IV, IV1/2, and V Receptacles and Housings (PDF, English)

Instruction Sheets:
- None Available

CAD Files:
- None Available

List all Documents

Additional Information:
- Product Line Information

Related Products:
- Tooling

Product Features (Please use the Product Drawing for all design activity)

Product Type Features:
- Product Type = Contact
- Wire Insulation Diameter (mm [in]) = 1.22 [0.048]
- Connector Series = Mod IV
- Wire Termination Type = Crimp
- Applied Pressure = Standard

Electrical Characteristics:
- Voltage Rating (VAC) = 250
- Contact Current Rating (Amps.) = 3
- Termination Resistance (mΩ) = 12
- Insulation Resistance (MΩ) = 5,000
- Dielectric Withstanding Voltage (V) = 750

Body Related Features:
- Wire Range (mm [AWG]) = 0.05-0.15 [30-26]

Contact Related Features:
- Contact Type = Receptacle
- Contact Mating Area Plating Material = Gold (30)
- Contact Material = Beryllium Copper
- Approved Standards = UL E28476, CSA LR7189

Industry Standards:
- RoHS/ELV Compliance = RoHS compliant, ELV compliant
- Lead Free Solder Processes = Not relevant for lead free process
- RoHS/ELV Compliance History = Always was RoHS compliant

Conditions for Usage:
- Terminate To = Wire
- Operating Temperature (°C) = -65 – +105

Packaging Related Features:
- Packaging Method = Loose Piece

Other:
- Brand = AMP

© 2008 Tyco Electronics Corporation All Rights Reserved