5206473 -3 Product Details

Live Product Chat US Only 8:30am - 5pm ET, Mon - Fri

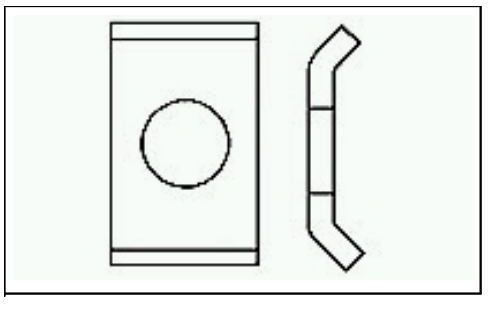

5206473 -3

Active

Hardware (AMPLIMITE)

Always EU RoHS/ELV Compliant (Statement of Compliance)

Product Highlights:

- Saddle Washer
- Thread Size = 4 -40
- Clear Chromate Screw Finish
- Set of Two

View all Features | Find Similar Products

Quick Links

Check Pricing & Availability
Search for Tooling
Product Feature Selector
Contact Us About This Product

Documentation & Additional Information

Product Drawings:
- WASHER, SADDLE, SPECIAL (PDF, English)

Catalog Pages/Data Sheets:
- None Available

Product Specifications:
- None Available

Application Specifications:
- None Available

Instruction Sheets:
- None Available

CAD Files:
- None Available

List all Documents

Additional Information:
- Product Line Information

Related Products:
- Tooling

Product Features (Please use the Product Drawing for all design activity)

Product Type Features:
- Product Type = Saddle Washer
- Thread Size = 4 -40
- For Use With = Mounting Screw 5206052 -3
- Body Material = Cold rolled Steel

Termination Related Features:
- Screw Finish = Clear Chromate

Body Related Features:
- Body Plating = Zinc

Industry Standards:
- Government/Industry Qualification = No
- RoHS/ELV Compliance = RoHS compliant, ELV compliant
- Lead Free Solder Processes = Not relevant for lead free process
- RoHS/ELV Compliance History = Always was RoHS compliant

Packaging Related Features:
- Packaging Method = Set of Two
- Packaging Quantity = 50

Other:
- Brand = AMP

© 2008 Tyco Electronics Corporation All Rights Reserved