CPF0805B1M21E1 ✔ ACTIVE

NEOHM | NEOHM CPF

TE Internal #: 2-1614959-2

1.21M ohm, Thin Film, Precision Resistor, .1 %, 0805, .1 W, ±25 ppm /°C, Solder, 2 Terminations, .55 mm [.022 in] Height, NEOHM CPF

View on TE.com >

Passive Components > Resistors > Surface Mount Resistors

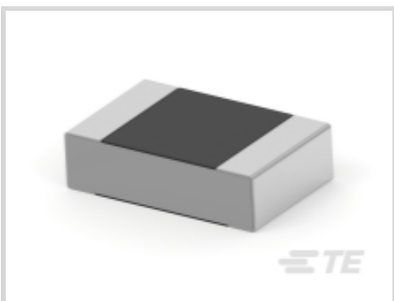

Resistor Type: **Precision Resistor**

Element Type: **Thin Film**

Package Size Code: **0805**

Power Rating: **.1 W**

Resistance Value: **1.21M Ω**

Features

Product Type Features

Resistor Type	Precision Resistor
Element Type	Thin Film
Package Size Code	0805

Configuration Features

Number of Resistors	1

Electrical Characteristics

Power Rating	.1 W
Resistance Value	1.21M Ω
Resistance Class	1kΩ – 1MΩ
Passive Component Tolerance	.1 %

Termination Features

Surface Mount Resistor Termination Type	Solder
Number of Terminations	2

Dimensions

Product Height	.55 mm[.022 in]
Product Length	2 mm[.079 in]
Product Width	1.25 mm[.049 in]

Usage Conditions

Temperature Coefficient	±25 ppm/°C

Industry Standards

Moisture Sensitivity Level	1

Packaging Features

Packaging Method	Taped & Reeled

Product Compliance

For compliance documentation, visit the product page on TE.com>

EU RoHS Directive 2011/65/EU	Compliant
EU ELV Directive 2000/53/EC	Compliant
China RoHS 2 Directive MIIT Order No 32, 2016	有害物质含量符合标准要求 No Restricted Substance(s) Above Threshold
EU REACH Regulation (EC) No. 1907/2006	Current ECHA Candidate List: JUNE 2025 (250) Candidate List Declared Against: JUNE 2025 (250) Does not contain REACH SVHC
Halogen Content	Low Halogen - Br, Cl, F < 900 ppm per homogenous material. Also BFR/CFR/PVC Free
Solder Process Capability	Reflow solder capable to 260°C

Product Compliance Disclaimer

This information is provided based on reasonable inquiry of our suppliers and represents our current actual knowledge based on the information they provided. This information is subject to change. The part numbers that TE has identified as EU RoHS compliant have a maximum concentration of 0.1% by weight in homogenous materials for lead, hexavalent chromium, mercury, PBB, PBDE, DBP, BBP, DEHP, DIBP, and 0.01% for cadmium, or qualify for an exemption to these limits as defined in the Annexes of Directive 2011/65/EU (RoHS2). Finished electrical and electronic equipment products will be CE marked as required by Directive 2011/65/EU. Components may not be CE marked. Additionally, the part numbers that TE has identified as EU ELV compliant have a maximum concentration of 0.1% by weight in homogenous materials for lead, hexavalent chromium, and mercury, and 0.01% for cadmium, or qualify for an exemption to these limits as defined in the Annexes of Directive 2000/53/EC (ELV). Regarding the REACH Regulation, the information TE provides on SVHC in articles for this part number is based on the latest European Chemicals Agency (ECHA) 'Guidance on requirements for substances in articles' posted at this URL: https://echa.europa.eu/guidance-documents/guidance-on-reach

Compatible Parts

TE Part # 2-1614959-3
CPF0805 1M24 0.1% 25PPM 1K RL

TE Part # 2-1614959-1
CPF0805 1M18 0.1% 25PPM 1K RL

Also in the Series | NEOHM CPF

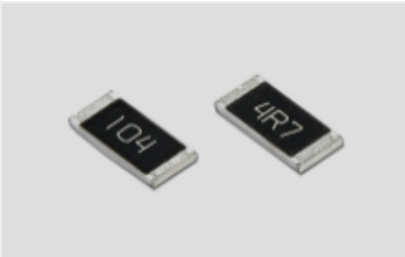

Surface Mount Resistors(5840)

Customers Also Bought

TE Part #DT04-2P
REC, 2P, GRY, N

TE Part #DT06-2S
PLG, 2P, GRY, N

TE Part #CAT-D48-ST273
DEUTSCH Connector Solid Contacts

TE Part #CAT-D487-W416
Wedgelocks: DEUTSCH DT

TE Part #206070-8
CABLE CLAMP KIT #17

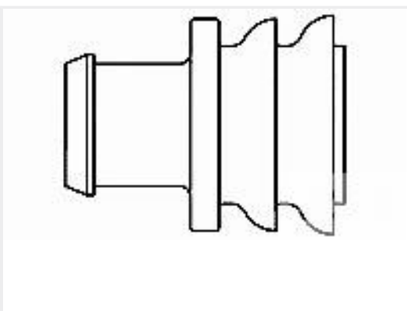

TE Part #281934-2
SINGLE WIRE SEAL

TE Part #CAT-AM71-CH8172
AMP SUPERSEAL 1.5MM, CONNECTOR HOUSING

Documents

Product Drawings

CPF0805 1M21 0.1% 25PPM 1K RL

English

CAD Files

Customer View Model

ENG_CVM_CVM_2-1614959-2_BA.2d_dxf.zip

English

3D PDF

3D

Customer View Model

ENG_CVM_CVM_2-1614959-2_BA.3d_stp.zip

English

Customer View Model

ENG_CVM_CVM_2-1614959-2_BA.3d_igs.zip

English

By downloading the CAD file I accept and agree to the Terms and Conditions of use.

Datasheets & Catalog Pages

1309350_PASSIVE_COMPONENT

English

CPF-1016

English

8-1773459-4_POWER_FILTERING_AND_RESISTIVE_SOLUTIONS_FOR_ELEVATORS_AND_ESCALATORS

English