THIS DRAWING IS UNPUBLISHED. RELEASED FOR PUBLICATION 20
© COPYRIGHT 2017 BY TE CONNECTIVITY CORPORATION ALL RIGHTS RESERVED.

REVISIONS

P	LTR	DESCRIPTION	DATE	DWN	APVD
	B2	ECO-14-008515	06JUN2014	YS	AT
	B3	ECO-17-003663	16MAR2017	YS	AG

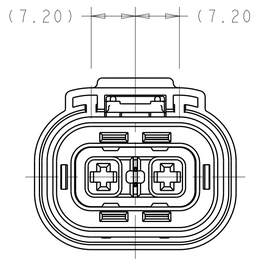

X-2103177-1
KEY A

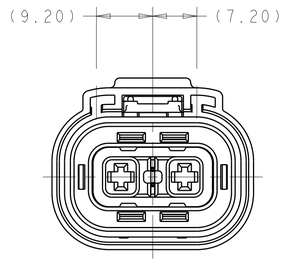

X-2103177-2
KEY B

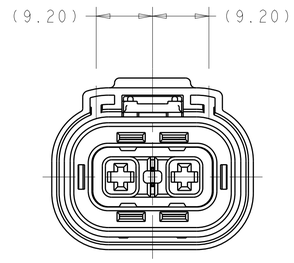

X-2103177-4
KEY D

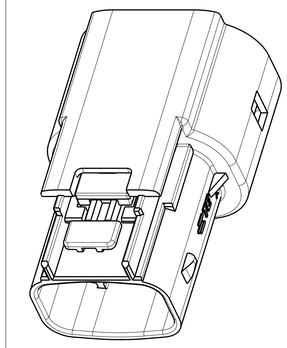

FINGER ACCESSIBLE LATCH
WITHOUT CPA
5-2103177-X
AND 6-2103177-X

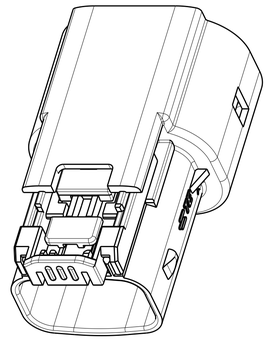

FINGER ACCESSIBLE LATCH
WITH CPA
4-2103177-X

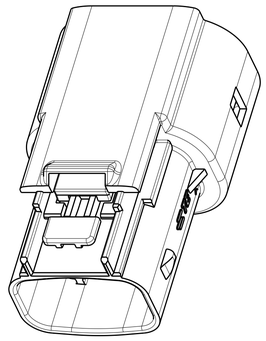

TOOL ACCESSIBLE LATCH
WITHOUT CPA
1-2103177-X

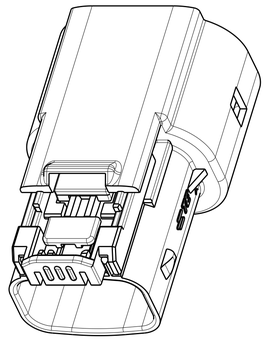

TOOL ACCESSIBLE LATCH
WITH CPA
2103177-X

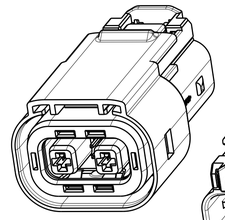

SCALE 3:2

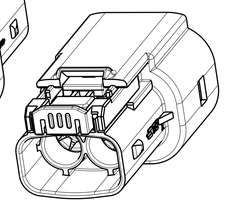

SCALE 3:2

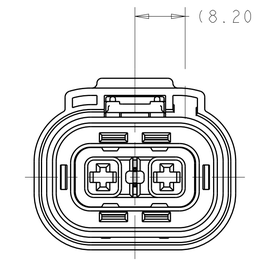

X-2103177-5
KEY E

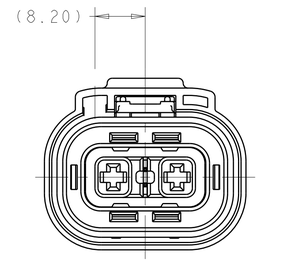

X-2103177-6
KEY F

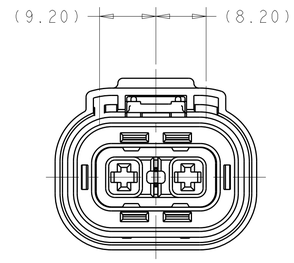

X-2103177-7
KEY G

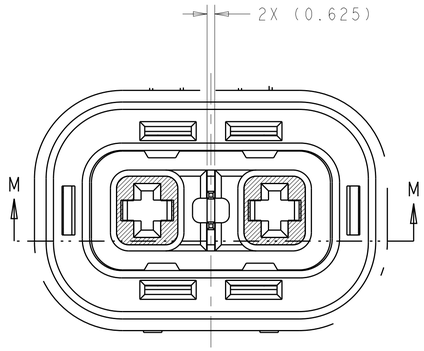

DETAIL D
SCALE 4:1

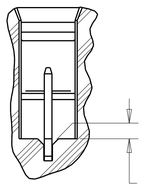

SECTION M-M
PARTIAL REMOVED

1. CONNECTOR MUST BE FREE OF ANY MECHANICAL DEFECTS WHICH MAY AFFECT FIT, FORM, OR PERFORMANCE
2. PART NUMBER AND JULIAN DATE CODE MARKED IN THIS AREA
3. FLOATING LATCH MUST BE FULLY INSTALLED AS SHOWN
4. CPA, WHEN PRESENT MUST BE INSTALLED IN PRE-STAGE POSITION AS SHOWN
5. INNER HOUSING SUB ASSEMBLY MUST BE FULLY LOCKED IN TWO LOCATIONS INTO OUTER HOUSING. INSPECTION PRIOR TO ASSEMBLY OF PERIPHERAL SEAL RETAINER PERMITTED
6. PERIPHERAL SEAL RETAINER MUST BE FULLY LOCKED IN TWO LOCATIONS INTO OUTER HOUSING.
7. MEASURE EACH STAMPING SHOULDER FLUSH CONDITION TO NEIGHBORING PLASTIC SURFACE
8. PRELIMINARY PART - NOT RELEASED FOR PRODUCTION
9. THIS PART HAS NOT COMPLETED VALIDATION TESTING

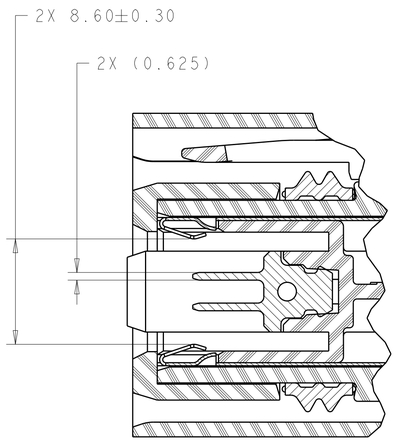

SECTION E-E
PARTIAL REMOVED
SCALE 4:1

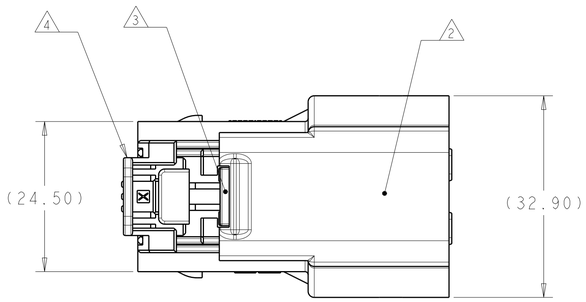

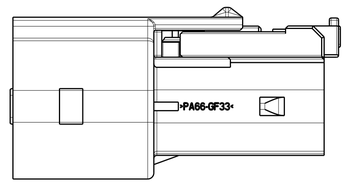

VIEW L-L
REMOVED

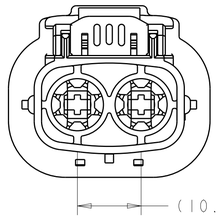

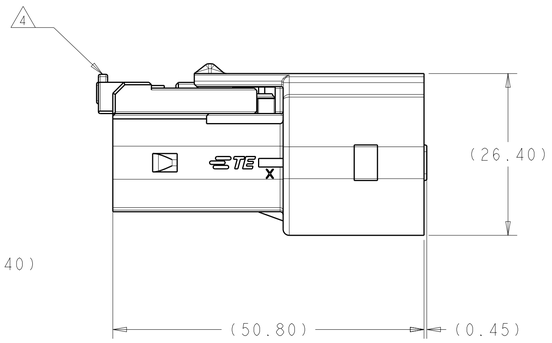

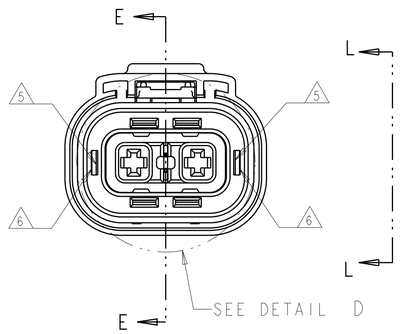

	DESCRIPTION	REV	PART NO
	PLUG ASSY, KEY E, HVA280-2PHI XE, FINGER ACCESSIBLE, BLACK	B	6-2103177-5
	PLUG ASSY, KEY D, HVA280-2PHI XE, FINGER ACCESSIBLE, BLACK	B	6-2103177-4
	PLUG ASSY, KEY B, HVA280-2PHI XE, FINGER ACCESSIBLE, BLACK	B	6-2103177-2
	PLUG ASSY, KEY G, HVA280-2PHI XE, FINGER ACCESSIBLE	B	5-2103177-7
	PLUG ASSY, KEY F, HVA280-2PHI XE, FINGER ACCESSIBLE	B	5-2103177-6
	PLUG ASSY, KEY E, HVA280-2PHI XE, FINGER ACCESSIBLE	B	5-2103177-5
	PLUG ASSY, KEY D, HVA280-2PHI XE, FINGER ACCESSIBLE	B	5-2103177-4
	PLUG ASSY, KEY B, HVA280-2PHI XE, FINGER ACCESSIBLE	B	5-2103177-2
	PLUG ASSY, KEY A, HVA280-2PHI XE, FINGER ACCESSIBLE	B	5-2103177-1
	PLUG ASSY, KEY G, HVA280-2PHI XE, FINGER ACCESSIBLE WITH CPA	B	4-2103177-7
	PLUG ASSY, KEY F, HVA280-2PHI XE, FINGER ACCESSIBLE WITH CPA	B	4-2103177-6
	PLUG ASSY, KEY E, HVA280-2PHI XE, FINGER ACCESSIBLE WITH CPA	B	4-2103177-5
	PLUG ASSY, KEY D, HVA280-2PHI XE, FINGER ACCESSIBLE WITH CPA	B	4-2103177-4
	PLUG ASSY, KEY B, HVA280-2PHI XE, FINGER ACCESSIBLE WITH CPA	B	4-2103177-2
	PLUG ASSY, KEY A, HVA280-2PHI XE, FINGER ACCESSIBLE WITH CPA	B	4-2103177-1
9 6	PLUG ASSY, KEY G, HVA280-2PHI XE, TOOL ACCESSIBLE	1	1-2103177-7
	PLUG ASSY, KEY F, HVA280-2PHI XE, TOOL ACCESSIBLE	B	1-2103177-6
	PLUG ASSY, KEY E, HVA280-2PHI XE, TOOL ACCESSIBLE	B	1-2103177-5
	PLUG ASSY, KEY D, HVA280-2PHI XE, TOOL ACCESSIBLE	B	1-2103177-4
	PLUG ASSY, KEY B, HVA280-2PHI XE, TOOL ACCESSIBLE	B	1-2103177-2
	PLUG ASSY, KEY A, HVA280-2PHI XE, TOOL ACCESSIBLE	B	1-2103177-1
9 8	PLUG ASSY, KEY G, HVA280-2PHI XE, TOOL ACCESSIBLE WITH CPA	1	2103177-7
	PLUG ASSY, KEY F, HVA280-2PHI XE, TOOL ACCESSIBLE WITH CPA	B	2103177-6
	PLUG ASSY, KEY E, HVA280-2PHI XE, TOOL ACCESSIBLE WITH CPA	B	2103177-5
	PLUG ASSY, KEY D, HVA280-2PHI XE, TOOL ACCESSIBLE WITH CPA	B	2103177-4
	PLUG ASSY, KEY B, HVA280-2PHI XE, TOOL ACCESSIBLE WITH CPA	B	2103177-2
	PLUG ASSY, KEY A, HVA280-2PHI XE, TOOL ACCESSIBLE WITH CPA	B	2103177-1

THIS DRAWING IS A CONTROLLED DOCUMENT.

DIMENSIONS: mm

TOLERANCES UNLESS OTHERWISE SPECIFIED:
0 PLC ±-
1 PLC ±0.2
2 PLC ±0.10
3 PLC ±0.013
4 PLC ±0.0001
ANGLES ±-

MATERIAL - -
FINISH - -

DWN D SIMPSON 24FEB2011
CHK A TYLER 24FEB2011
APVD J BOLEWITZ 24FEB2011
PRODUCT SPEC 108-2394
APPLICATION SPEC 114-13259
WEIGHT -

TE Connectivity

NAME PLUG ASSY HVA280-2PHI XE -

SIZE A1 | CAGE CODE 00779 | DRAWING NO C-2103177 | RESTRICTED TO -

CUSTOMER DRAWING | SCALE 2:1 | SHEET 1 OF 1 | REV B3