THIS DRAWING IS UNPUBLISHED. RELEASED FOR PUBLICATION -,- .
© COPYRIGHT – TE Connectivity Ltd. ALL RIGHTS RESERVED.

REVISIONS

| P | LTR | DESCRIPTION | DATE | DWN | APVD |
|---|---|---|---|---|---|
| | B | TRANSFER ECOC | 07/03 | – | CA |
| | B1 | REVISED PER ECO-18-002105 | 27FEB2018 | RS | DR |

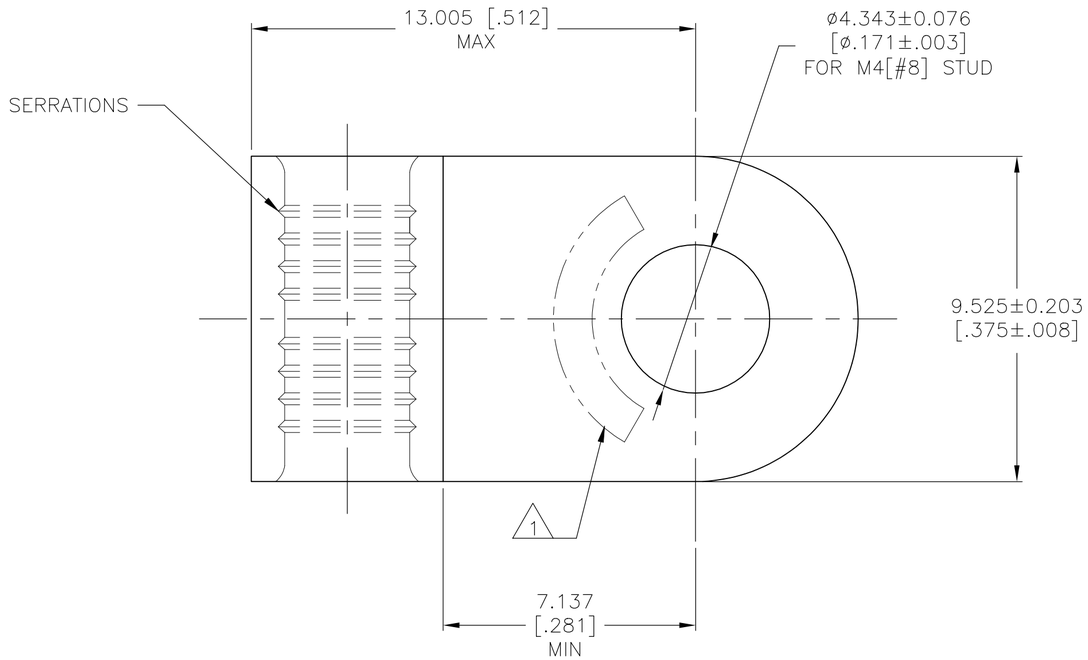


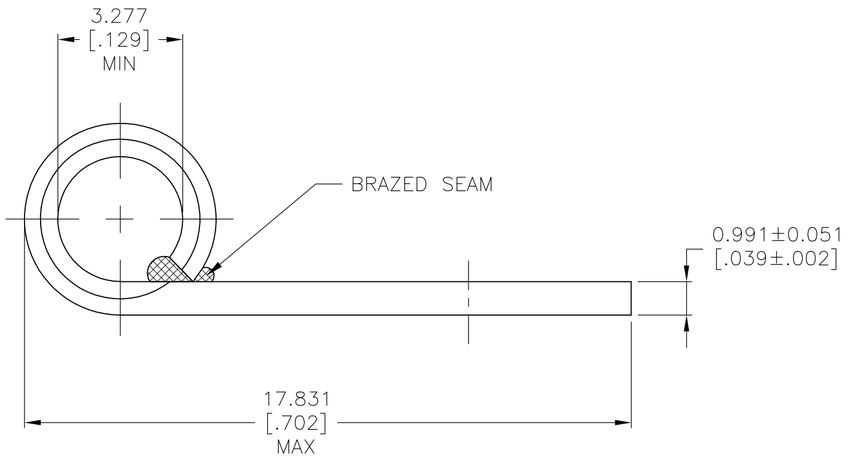


**AMP**
WIRE RANGE

12–10 AWG
SOLID OR STRANDED

1. STAMP AMP 12–10* APPROX AS SHOWN
2. MATERIAL: COPPER PER ASTM B152,ANNEALED
3. FINISH: NICKEL PLATE 0.00762[.000300] MIN EXT THK PER SAE AMS QQ–N–290

| | | | |
|---|---|---|---|
| PRELIMINARY | 5000 | BULK/BAG | 132005–2 |
| | 500 | LOOSE PIECE | 132005–1 |
| | QUANTITY | PACKAGING TYPE | PART NO |

AMP INCORPORATED
CUSTOMER SERVICE SYSTEMS

| | |
|---|---|
| FOR ADDITIONAL PRODUCT INFORMATION OR COPIES OF DRAWINGS AND TECHNICAL DOCUMENTS | PRODUCT INFORMATION CENTER 1–800–522–6752 |
| FOR APPLICATION | TOOLING ASSISTANCE CENTER |
| TOOLING INFORMATION | 1–800–722–1111 |
| FOR ORDER ENTRY | 1–800–526–5142 |

MAX RECOMMENDED OPERATING TEMPERATURE: 343°C [649°F] MAX
VOLTAGE RATING: NOT APPLICABLE
WIRE CROSS SECTIONAL AREA RANGE, 2.62–6.64mm²[5,180–13,100] CIR MILS SOLID OR STRANDED

THIS DRAWING IS A CONTROLLED DOCUMENT.

DIMENSIONS: mm [INCHES]

TOLERANCES UNLESS OTHERWISE SPECIFIED:
0 PLC ± –
1 PLC ± –
2 PLC ± –
3 PLC ± 0.127[.005]
4 PLC ± –
ANGLES ± 5°

MATERIAL 2
FINISH 3

| | | |
|---|---|---|
| DWN | RAVI S | 27FEB2018 |
| CHK | ROHDE DANIEL F | 27FEB2018 |
| APVD | ROHDE DANIEL F | 27FEB2018 |
| PRODUCT SPEC | — | |
| APPLICATION SPEC | — | |
| WEIGHT | | |

TE Connectivity Ltd.

NAME: TERMINAL,STRATO–THERM,HR,FLAG 12–10 AWG –

| SIZE | CAGE CODE | DRAWING NO | RESTRICTED TO |
|---|---|---|---|
| A2 | 00779 | C–132005 | — |

CUSTOMER DRAWING | SCALE 8:1 | SHEET 1 OF 1 | REV B1

132005

1471–9 (1/15)